FILE

NS

Norfolk Southern Corporation
Communications and Signal Department
1200 Peachtree Street, N.E., Box 123
Atlanta, Georgia 30309

B. L. Sykes
Chief Engineer
C&S Engineering
404/529-2105

July 3, 2006
061-10.0689

06-565-RR-STP

RECEIVED-DOCKETING DIV
2006 JUL 11 PM 3: 32
PUCO

Ms. Susan Kirkland, Supervisor
Ohio Rail Development Comm.
50 W. Broad St., Room 1520
Columbus, OH, 43215-0899

Dear Ms. Kirkland:

RE: The Modification of Crossing Warning Devices at SR-13 I Moxahala, Perry County, Ohio, DOT: 513 427V, MP: RR-054.91

Attached for your review and approval are two copies each of the detailed cost estimate, material list and engineering plans for this crossing.

Although we cannot give you an exact date of installation at this time we can provide our average installation time, which is 9.1 months after authorization from the state. After this project is authorized, we will order material and schedule for installation once we have received approvals from ODOT's district office.

An extra copy of this letter is included with the enclosures. Please date stamp this extra copy and forward to Mr. R. S. Noe, Assistant General Attorney, Norfolk Southern Corporation, Three Commercial Place, Norfolk, Virginia, 23510.

If you have questions, please call Mike Rappatta at 404-582-6377.

Sincerely,

B. L. Sykes

B. L. Sykes

Enclosure(s)

BLS/rhr/rhr/mlr/rjs

Cc: Mr. R. S. Noe, NS Corporation, Norfolk, VA
Ms. Bonnie Johrendt, PUCO (w/plans, estimate and material list)
Mr. G. Martin – PUCO (w/plans, estimate and material list)
Mr. T. Darvis – ORDC (w/plans, estimate and material list)
Docketing Division (w/plans, estimate and material list)
Mr. H. W. Maness, NS Corp., Roanoke, VA (w/estimate)

This is to certify that the images appearing are an accurate and complete reproduction of a case file document delivered in the regular course of business
Technician _____ Date Processed 7-11-06

26-Jun-06

Detailed Estimate for Grade Crossing Warning Devices

City/State: MOXAHALA, OH
MilePost: RR-54.91
State Proj. No.:
S&E Proj. No.: 10.1160
Man Days: 104

Road: SCOTT ST., SR-13
DOT/AAR: 513427V
County: PERRY
AFE: F03417
File Number: 061-10.0689

*****Purchases - Others*****		
Meals and Lodging:	$9,785.32	
Rental of Equipment:	$21,392.80	
(2 Trucks, 1 Backhoe w/ Trailer and 1 Pipe-Pusher for 26 Days)		
Construction Supervision Vehicle:	$1,711.42	
Purchases - Other Total:		$32,889.54
*****Material And Additives*****		
Material Cost:	$73,285.00	
Sales and Use Tax:	$0.00	
Material Handling Freight:	$3,664.27	
Material Total:		$76,949.27
*****Labor And Additives*****		
Labor Cost:	$25,168.00	
(4 man crew at $968.00 a day for: 26 days)		
Payroll Tax & Overheads:	$24,828.23	
Preliminary Engineering:	$8,663.89	
Construction Supervision:	$7,104.93	
Labor Total:		$65,765.05
	Project Cost:	$175,603.86
	Scrap / Salvage Credit:	$0.00
	Project Total:	**$175,603.86**

Estimated on: 26-Jun-06

Estimated by: n5s2v

Estimate valid for 1 year from date of estimate

Norfolk Southern Railway

Highway Crossing Signalization Program - Material List

Do not substitute items without permission from S & E Engineering

City:	MOXAHALA
Road:	SCOTT ST., SR-13
Mile Post:	RR-54.91
Drawing Number:	81240549
State ProjectNumber:	
County:	PERRY
A A R Number:	513427V
Project Number:	10.1160
File Number:	061-10.0689
A F E Number:	F03417
Store Number:	
Supervisor:	L.A. SMITH
Tax Code:	3500

Vendor to supply the following copies after pricing:

1 Set - Material Management with original Invoice
2 Sets - with plans shipped in car with material
1 Set - S&EGen. Supt. Construction w/copy of invoice

Location: MOXAHALA OH S&E Proj. No.: 10.1160 AFE No.: F03417 Drawing No.: 81240549

Store No.: P.O.Number: Date Required: Date Shipped: Vendor: Safetran Systems Corp.

Qty.	Class-Item-CD	UI	Price per Item	Total Price	Item Description	Quantity Shipped	Quantity Installed Date Quan.	Date Quan.	Date Quan.	Quantity Returned (Credit)	Special Instructions
3	670-360693-4	EA	$5.04	$15.12	AAR/DOT NUMBER PLATE/DECAL, ORDER 3 PER PROJECT. 60 DAY LEAD TIME. SUPPLIED BY S'TRAN.						
1	165-006505-4	EA	$1,051.54	$1,051.54	AC SERVICE, COMPLETE LESS METER BASE, ASSEMBLED ON 30' POLE						
13	105-871901-4	EA	$161.57	$2,100.41	BATTERY,GNB 265AH MODEL 50A11 SINGLE CELL 2.25 VOLTS						
2	670-980754-4	EA	$2,404.40	$4,808.80	BERM WALL, 20' L X 4' H W/ HAND RAILS - SERRMI #40409-20						
2	670-980689-4	EA	$71.71	$143.42	BRACKET HIGH WIND, (RIGID 3'), WIG- 191036, WALRUS TUSK TYPE						
2	670-561375-4	EA	$1,197.90	$2,395.80	BRACKET, GATE SAVER, NEG385102GS, SPRING LOADED SWING AWAY ADAPTER FOR FIBERGLASS/ALUMINUM GATES, USE WITH GATE 28' AND LESS						
1	670-356949-4	EA	$97.00	$97.00	CABLE, 10' GENERATOR HOOK UP, SERRMI P/N 40524. FEMALE CONNECTOR						
300	465-292862-4	LF	$1.04	$312.00	CABLE, U-2-6 TWISTED, S-23 OKONITE 113-12-3933 SOLID TINNED CONDUCTOR						
400	465-292929-4	LF	$3.05	$1,220.00	CABLE, U.G. 5 COND. NO. 6 AWG SOLID COPPER CABLE TO MEET NS CORP. SPEC. FOR SIGNAL						
300	465-939422-4	LF	$2.55	$765.00	CABLE, UG 12 CONDUCTOR NO 14 AWG SOLID EACH CONDUCTOR WITH 5/64 IN INSULATION 10 MIL						
300	465-791835-4	FT	$2.22	$666.00	CABLE, UG AC ENTRANCE 3C#6-7X OKONITE FMPF-L 094-078 TR W/G 1 X 8 7X W010 BRZ TAPE 600V PRODUCT CODE 206-11-6070						
80	165-544477-4	FT	$2.55	$204.00	CONDUIT, 4"x10' PVC, SCHEDULE 80 BELL CONNECTOR AT ONE END, 1/2 PT. GLUE IN KIT 670-123298-4						
2	670-090450-4	EA	$50.38	$100.76	CONNECTOR,WELDED FAR RAIL HARMON A1000-2W						
2	670-486646-4	EA	$41.62	$83.24	CONNECTOR,WELDED NEAR RAIL HARMON A1000-1W						
2	670-794453-4	EA	$854.03	$1,708.06	COUNTERWEIGHT PKAGE, 25-31'GATE S'TAN S- MECH ONLY, STAINLESS TO INCLUDE HUB, SUPPORT ARMS						
4	670-760012-4	EA	$40.02	$160.08	COVER, FOR 1 WAY FLASHING LIGHT ASSY. 18 OZ. BLACK VINYL COATED NYLON. ====TO COVER 2 LAMPS====						
1	670-986650-4	EA	$375.69	$375.69	DISPOSAL, CONSTRUCTION DEBRIS AND CLEANING X'ING EQUIPMENT CONTAINER						

APPROVED BY STATE	APPROVED BY RAILROAD	CAR NUMBER	SEAL NUMBER

Location: MOXAHALA OH S&E Proj. No.: 10.1160 AFE No.: F03417 Drawing No.: 81240549

Store No.: P.O.Number: Date Required: Date Shipped: Vendor: Safetran Systems Corp.

Qty.	Class-Item-CD	UI	Price per Item	Total Price	Item Description	Quantity Shipped	Quantity Installed Date Quan.	Date Quan.	Date Quan.	Quantity Returned (Credit)	Special Instructions
1	670-000004-4	EA	$700.00	$700.00	FCC LICENSE FOR MONITOR/RADIO						
8	670-000003-4	EA	$255.85	$2,046.80	FILL/STONE #57, QUANITY IS BASED ON TRUCK LOAD PLUS DELIVERY COST						
4	670-015231-4	EA	$423.50	$1,694.00	FOUNDATION,DIXIE,S-2 GATE 5'6" ASSEMBLED						
2	670-263738-4	EA	$331.87	$663.74	GATE, ARM FIBERGLASS-ALUMINUM 25-31 FT. INCLUDES GATE GUARD FOR GATE LIGHT CABLE, 076600-320017, NEG P/N 8002-4NFS/CG						
1	670-477991-4	EA	$317.90	$317.90	KIT, GROUNDING ASSY FOR AL I/S INCLUDES 8 GRD RDS,200'#4WIRE,12 4 WIRE ONE-SHOTS. ERICO SBK206						
1	670-123298-4	EA	$256.93	$256.93	KIT, HARDWARE SUPPLIES REQUIRED X'ING P'CKAGES. WEB CONNECTORS FOR SHUNT(8EA) TAPE, AMPS,P'GUM PAINT,SLEEVES,TAGS,GLUE, 100 EA WHITE TAGS,)NE CAN BLUE MARKING PAINT ETC...						
2	670-764166-4	EA	$907.65	$1,815.30	LAMP ASSY, 5" MAST MTG. 2W IND. 20" BKGRD, FLX-12 W/BULB S'TRAN #042003-487XNS						
6	165-643547-4	EA	$4.30	$25.80	LAMP, 18 WATT 10 VOLT S-11 SC BAY 18S11/1SC CLEAR RWY SIGNAL UJ-71463 GE						
4	255-590880-4	EA	$16.12	$64.48	LOCK, AMERICAN LOCK MODEL H-10KA KEYED ALIKE TO PRIVATE KEYWAY D456 AND STAMPED "NS SIG"						
4	670-637778-4	EA	$1,031.41	$4,125.64	MAST, 5" ALUMINUM 13'10" WITH DOUBLE JCT. BOX BASE. S'TRAN P# 070519-11AX.						
2	670-521147-4	EA	$2,932.81	$5,865.62	MECHANISM, GATE MODEL S40, WITH CONTACT HEATER, COMPLETE W/RELAY S'TRAN # 074000-W00090						
2	670-001347-4	EA	$63.27	$126.54	PACKAGE, HARDWARE SIGN 5 IN. MOUNTING, SERRMI A1250-5, HARMON @200965-000, OR						
1	255-646807-4	EA	$10.38	$10.38	PADLOCK, SAFETRAN PART NO. 030399-29X SCREW TYPE FOR CIR CONTROLLER AND BTY. BOX						
3	670-514605-4	EA	$8.45	$25.35	PINNACLE, W-C SECT 1-11, 4"& 5" REF K1 110-8 OR SAFETRAN NO. @035045-503X						
1	165-902002-4	EA	$308.00	$308.00	PROTECTOR, SURGE 120/240VAC, ERICO P/N EPD120/240TDFL						
4	465-002899-4	EA	$22.06	$88.24	REEL, CABLE DISPOSABLE FOR CROSSING SIGNAL PACKAGES						
2	435-805560-4	EA	$6.25	$12.50	SAND, 25LB BAG FOR CABLE ENTRANCE INTO THE SHELTER						

APPROVED BY STATE	APPROVED BY RAILROAD	CAR NUMBER	SEAL NUMBER

Location: MOXAHALA OH S&E Proj. No.: 10.1160 AFE No.: F03417 Drawing No.: 81240549

Store No.: P.O.Number: Date Required: Date Shipped: Vendor: Safetran Systems Corp.

Qty.	Class-Item-CD	UI	Price per Item	Total Price	Item Description	Quantity Shipped	Quantity Installed Date Quan.	Date Quan.	Date Quan.	Quantity Returned (Credit)	Special Instructions
1	670-391911-4	EA	$5,329.57	$5,329.57	SEARII AUTOMATED INSPECTOR SYSTEM KIT, w/ 1-iLOD.1-eBELL, 2-GTS, 2- MTSS, 1-GFT, 1-VHFC, 2- RECORDER INTERFACE MODULE, 1-ECHELON CONNECTOR						
1	670-281280-4	EA	$7,006.00	$7,006.00	SHELTER BARE 6X6, ALUMN, FARADAY, W/CABLE CHUTES BEHIND TERMINAL BOARD, W/GEN. CONN. W/ADJUSTABLE PIERS. SAFETRAN P/N 058400-66-78A						
2	670-586967-4	EA	$37.68	$75.36	SHUNT COVER W/LAG SCREWS, 19"X19", SERRMI #40271, ORDER 1 PER SHUNT						
2	670-688850-4	EA	$370.27	$740.54	SHUNT, MULTI-FREQ. #62775-3497 SAFETRAN NARROW BAND						
2	670-393331-4	EA	$37.43	$74.86	SIGN CROSSING MALFUNCTION ASSEMBLY FOR 4" AND 5" MAST, SAFETRAN #T17215						
2	670-806648-4	EA	$56.42	$112.84	SIGN, X-BUCK, LESS HARDWARE, SAFETRAN 035200-X CR 02-490546						
1	670-330382-4	RL	$11.50	$11.50	TAPE, THOR 3" DURATEC, ORANGE 1000' LENGTHS. "WARNING STOP DIGGING"						
1	670-258957-4	EA	$25,580.50	$25,580.50	WIRED RACK, 6X6 FARADAY, 20AMP SINGLE TRK SSCCIIIA, GCP3000D2, 2 CRAGG CHARGER, 2 RELAY RACKS, SAFTRAN P/N 20A 1TRK, USE WITH I/S 670-281280-4 W/CABLE CHUTES BEHIND THE FARADAY SHIELD						

Total Material: $73,285.31

APPROVED BY STATE	APPROVED BY RAILROAD	CAR NUMBER	SEAL NUMBER

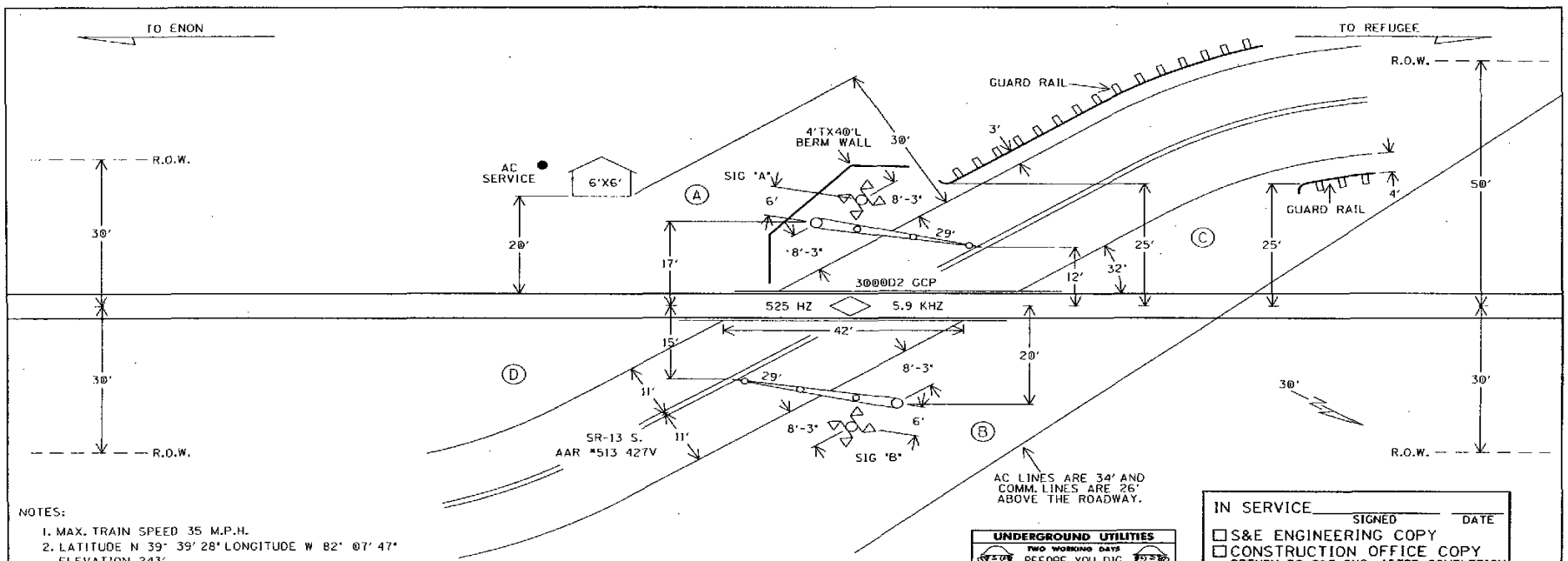

NOTES:

1. MAX. TRAIN SPEED 35 M.P.H.
2. LATITUDE N 39° 39' 28" LONGITUDE W 82° 07' 47" ELEVATION 243'.
3. SIGNAL 'A' TO HAVE BELL.
4. LOCATE U/G UTILITIES & CABLE BEFORE DIGGING.
5. CROSSING LOCATED IN PERRY COUNTY.
6. NEAREST STREET ADDRESS IS SR-13 S.
7. NEAREST INTERSECTING STREET IS CR-14
8. DISTANCE TO NEAREST INTERSECTING STREET IS 200 FT.
9. THE NEW 6'X6' SHELTER IS TO BE PLACED IN QUADRANT 'A' AND WILL REQUIRE 5 CUBIC YARDS OF FILL FOR PROPER SHELTER PLACEMENT.
10. THE SIGNAL IN QUADRANT 'B' WILL REQUIRE 2 CUBIC YARDS OF FILL FOR PROPER SIGNAL PLACEMENT.
11. THE INSTALLATION OF A 4'TX40' BERM WALL IS REQUIRED IN QUADRANT 'A' ALONG WITH 200 CUBIC YARDS OF FILL DUE TO DROP-OFF. FIELD PLEASE VERIFY PLACEMENT.

(A) (B) (C) (D) = QUADRANT MARKERS

UNDERGROUND UTILITIES
TWO WORKING DAYS
BEFORE YOU DIG
CALL 1-800-362-2764 TOLL FREE
OHIO UTILITIES PROTECTION SERVICE
NON-MEMBERS
MUST BE CALLED DIRECTLY

IN SERVICE _____ SIGNED _____ DATE

- ☐ S&E ENGINEERING COPY
- ☐ CONSTRUCTION OFFICE COPY
  RETURN TO S&E ENG. AFTER COMPLETION
- ☐ FIELD COPY
  RETURN TO CASE AFTER COMPLETION
- ☐ PROJECT ENGINEER COPY

SCALE: 1" = 20'
PROJECT #10.1160

LAYOUT

FILE No. 061-10.0689

DESIGNED BY: KSW 06-07-06	NORFOLK SOUTHERN		
DRAWN BY: SSC 06-07-06	OFFICE OF ASS'T. VICE PRESIDENT COMM. & SIGNAL, ATLANTA, GA.	M.P.:	RR-54.91
CHECKED BY: LAR 06-15-06	HOBSON JCT. TO REFUGEE MOXAHALA, OH FLGS AT SR-13 S.		
IN SERVICE: - -	WEST VIRGINIA SECONDARY	FILE No.	R-
	CADD or DWG. No. 81240549.01	SHEET No.	1 of 19

REVISION INITIALS

PROPERTY
PENNSYLVANIA R.R.

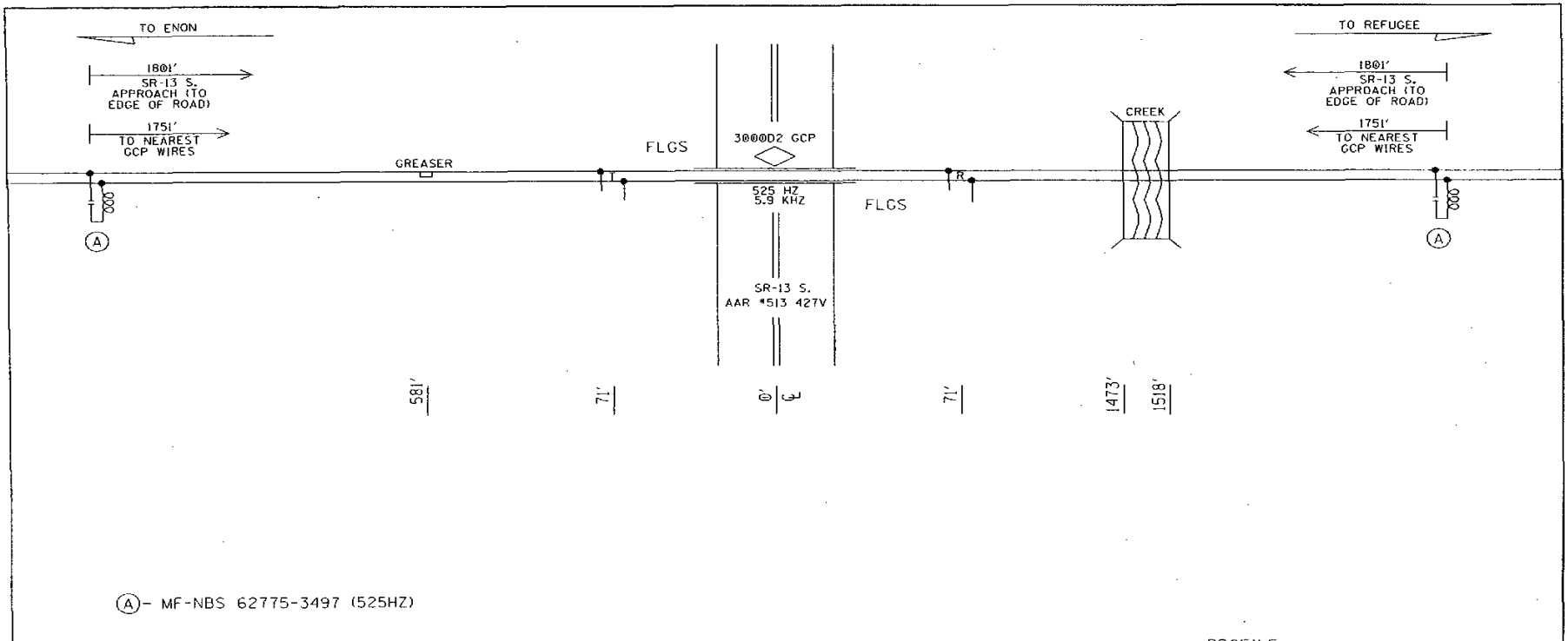

(A)- MF-NBS 62775-3497 (525HZ)

PROFILE

DESIGNED BY: KSW 06-07-06	NORFOLK SOUTHERN		
DRAWN BY: SSC 06-07-06	OFFICE OF ASS'T. VICE PRESIDENT COMM. & SIGNAL, ATLANTA, GA.	M.P.± RR-54.91	
CHECKED BY: LAR 06-15-06	HOBSON JCT. TO REFUGEE MOXAHALA, OH FLGS AT SR-13 S.		
	WEST VIRGINIA SECONDARY	FILE No. R-	
IN SERVICE: - -	CADD or DWG. No. 8124054 9.02	SHEET No. 2 of 19	

REVISION INITIALS

PROPERTY
PENNSYLVANIA R.R.

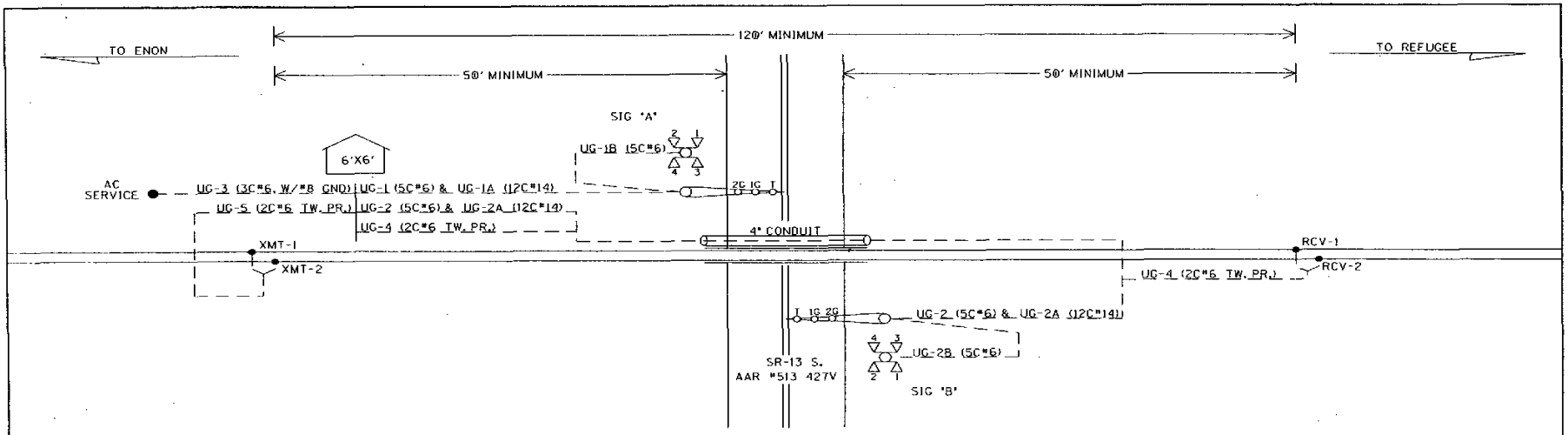

UG-1-5CUG *6
AEC
AEZ
AEB
B16-A
N16-A

UG-1B-5CUG *6
AEC
AEZ
AEB
SPARE
SPARE

UG-1A-12CUG *14
AXG
AXX
IAXX
XGP1
ACBX120
ACNX120
AMTSS
SPARE
SPARE
SPARE
SPARE
SPARE

UG-2A-12CUG *14
BXG
BXX
IBXX
XGP1
XGP
BCBX120
BCNX120
BMTSS
SPARE
SPARE
SPARE
SPARE

UG-3-3CUG *6 W/*8 GND
BX120-A
BX120-B
NX120
GND

UG-4-TW. PR. *6
RCV-1
RCV-2

UG-5-TW. PR. *6
XMT-1
XMT-2

UG-2-5CUG *6
BEC
BEZ
BEB
B16-B
N16-B

UG-2B-5CUG *6
BEC
BEZ
BEB
SPARE
SPARE

CABLE PLAN

DESIGNED BY: KSW 06-07-06	NORFOLK SOUTHERN		
DRAWN BY: SSC 06-07-06	OFFICE OF ASS'T. VICE PRESIDENT COMM. & SIGNAL, ATLANTA, GA.	M.P.: RR-54.91	
CHECKED BY: LAR 06-15-06	HOBSON JCT. TO REFUGEE MOXAHALA, OH FLGS AT SR-13 S.		
IN SERVICE: - -	WEST VIRGINIA SECONDARY	FILE No. R-	
	CADD or DWG. No. 81240549.03	SHEET No. 3 of 19	

REVISION INITIALS

PROPERTY
PENNSYLVANIA R.R.

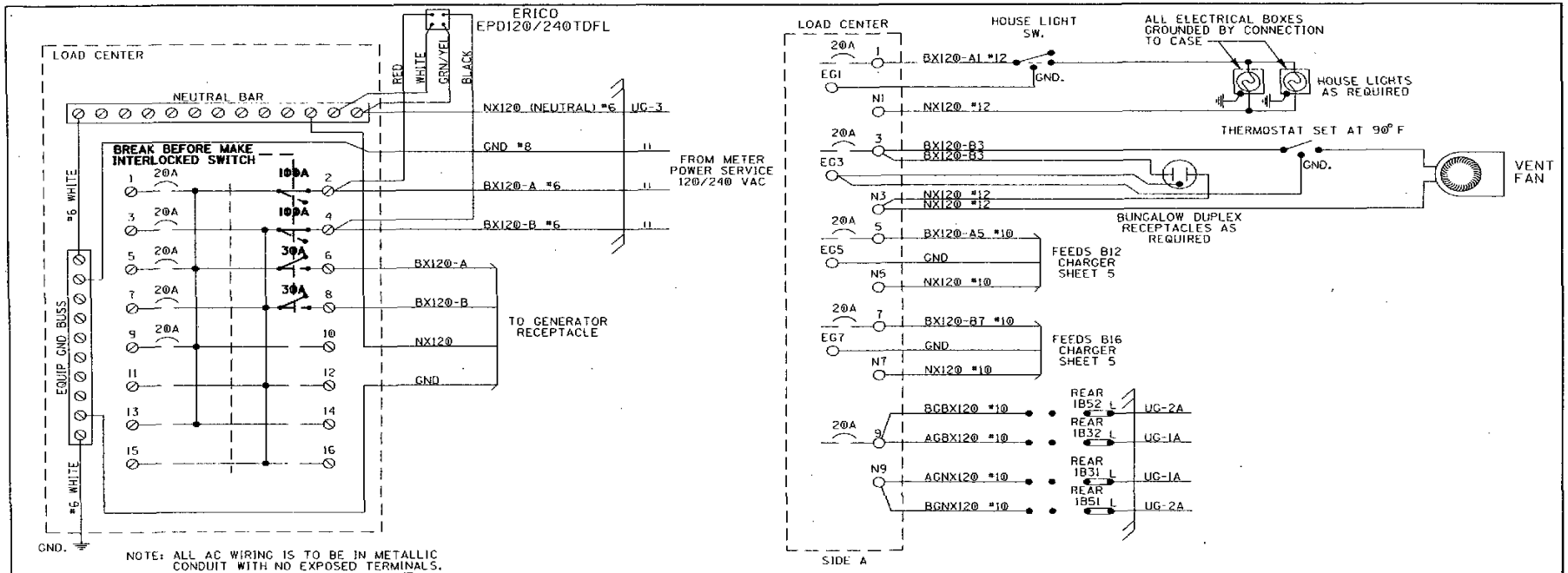

NOTE: ALL AC WIRING IS TO BE IN METALLIC CONDUIT WITH NO EXPOSED TERMINALS. ALL AC 120V AND 240V EQUIPMENT IS TO BE PROPERLY GROUNDED.

SQUARE "D" PART NUMBERS:

LOAD CENTER ——— QO116L125G
10A 1P CIR BKR —— QO110
20A 1P CIR BKR —— QO120
30A 1P CIR BKR —— QO130
30A 2P CIR BKR —— QO230
60A 2P CIR BKR —— QO260
100A 2P CIR BKR —— QO2100
MECH INTERLOCK —— PK4DTIM4LA

GENERATOR RECEPTACLE:
MALE CONNECTOR - NEMA L1430-F1

LOAD CENTER WIRING

DESIGNED BY: KSW 06-07-06	NORFOLK SOUTHERN		
DRAWN BY: SSC 06-07-06	OFFICE OF ASS'T. VICE PRESIDENT COMM. & SIGNAL, ATLANTA, GA.	M.P.: RR-54.91	
CHECKED BY: LAR 06-15-06	HOBSON JCT. TO REFUGEE MOXAHALA, OH FLGS AT SR-13 S.		
IN SERVICE: - -	WEST VIRGINIA SECONDARY	FILE No. R-	
	CADD or DWG. No. 81240549.04	SHEET No. 4 of 19	

REVISION INITIALS

PROPERTY
PENNSYLVANIA R.R.

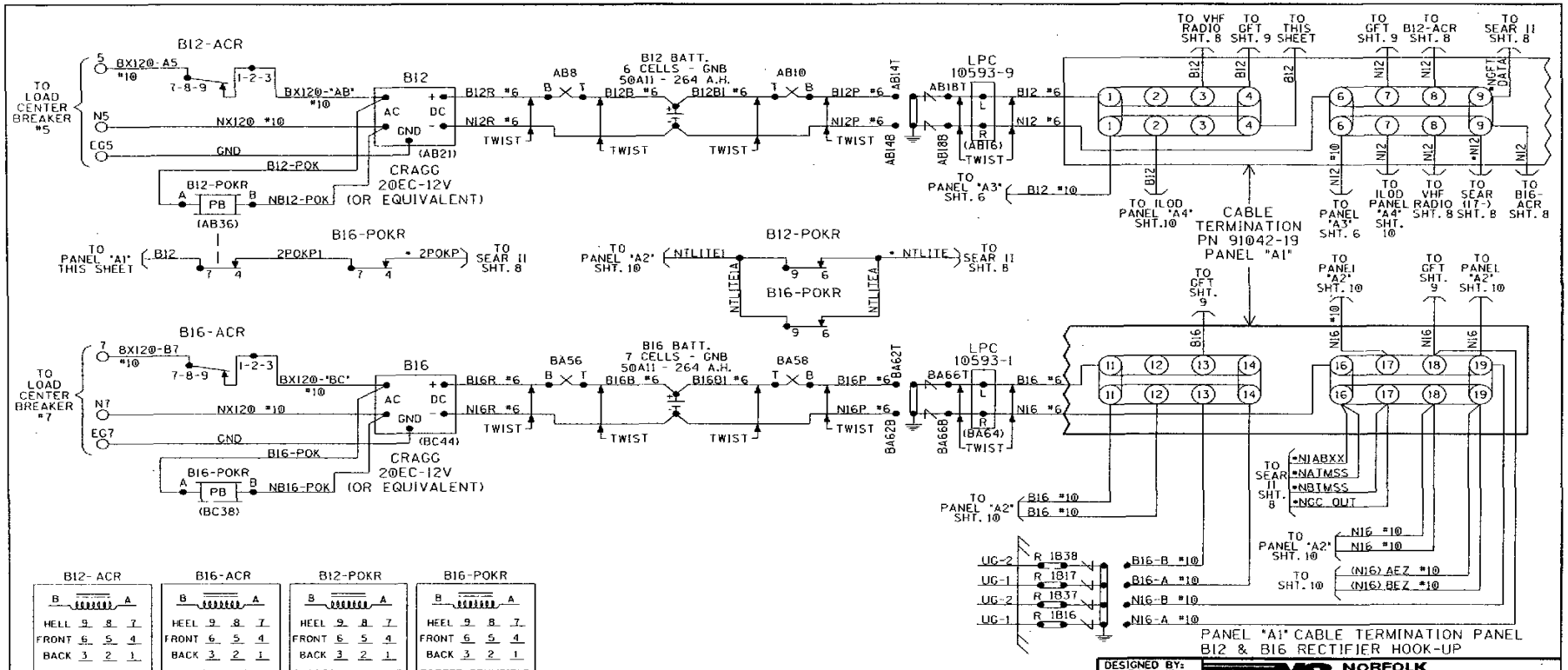

NOTES:
ALL WIRING TO BE #16AWG UNLESS NOTED OTHERWISE.
* = CABLE PROVIDED WITH SEAR II

DESIGNED BY: KSW 06-07-06	NORFOLK SOUTHERN		
DRAWN BY: SSC 06-07-06	OFFICE OF ASS'T. VICE PRESIDENT COMM. & SIGNAL, ATLANTA, GA.	M.P.: RR-54.91	
CHECKED BY: LAR 06-15-06	HOBSON JCT. TO REFUGEE MOXAHALA, OH FLGS AT SR-13 S.		
IN SERVICE: - -	WEST VIRGINIA SECONDARY	FILE No. R-	
	CADD or DWG. No. 81240549.05	SHEET No. 5 of 19	

REVISION INITIALS

PROPERTY PENNSYLVANIA R.R.

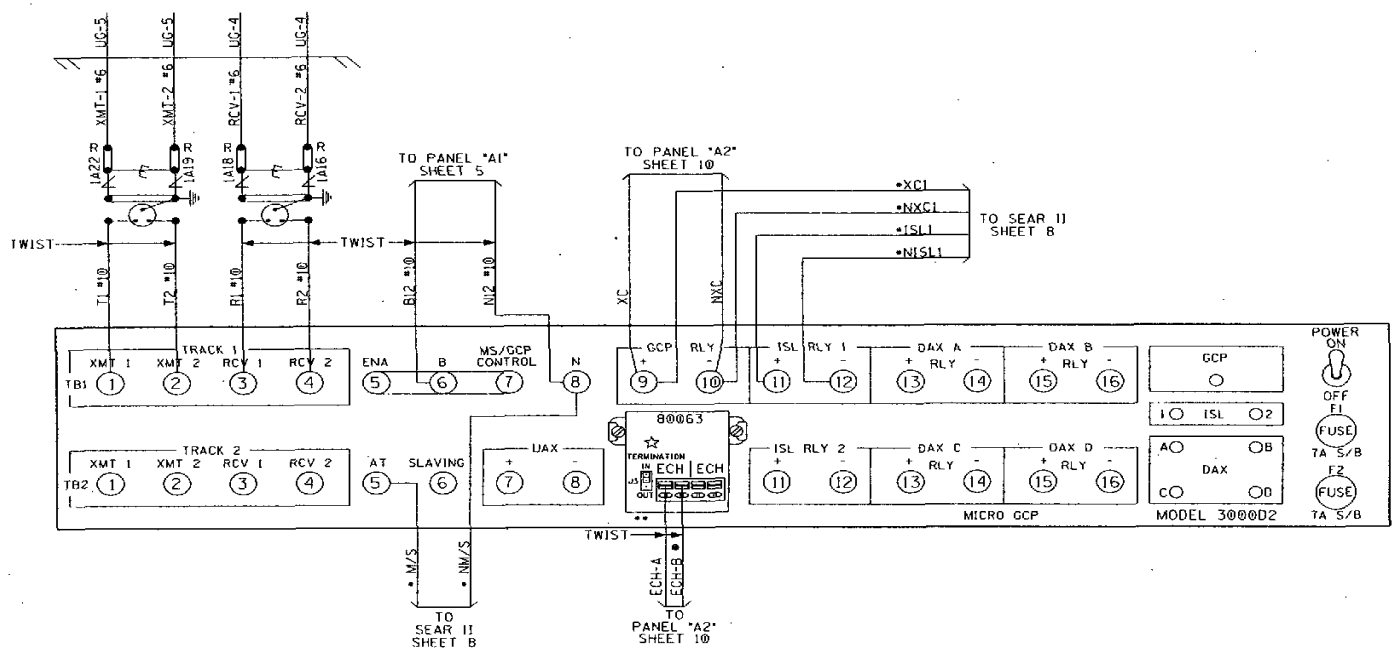

3000D2 GCP "A3"

T1 IF = 5.9 KHZ
T2 IF = --.- KHZ

NOTES:
ALL WIRING TO BE #16AWG UNLESS NOTED OTHERWISE.

• = CABLE PROVIDED WITH SEAR II

•• = 80063 ADAPTER CARD AND E-LEVEL OR LATER SOFTWARE NEEDED FOR SEAR II / ECHELON CAPABILITIES.

•= ECHELON CONNECTIONS NOT TO EXCEED 53' IN LENGTH AND TOTAL LENGTH NOT TO EXCEED 430' WITH A MAXIMUM OF 8 NODES. RECOMMEND USE BELDEN WIRE CABLE #8461 OR EQUIVALENT.

☆ = 80063 ECHELON RJ45 CONNECTOR TERMINATION J3 TO BE SET "IN" WHEN AT END OF ECHELON NETWORK.

PANEL "A3" 3000D2 GCP HOOK-UP

DESIGNED BY: KSW 06-07-06	NORFOLK SOUTHERN		
DRAWN BY: SSC 06-07-06	OFFICE OF ASS'T. VICE PRESIDENT COMM. & SIGNAL, ATLANTA, GA.	M.P.: RR-54.91	
CHECKED BY: LAR 06-15-06	HOBSON JCT. TO REFUGEE MOXAHALA, OH FLGS AT SR-13 S.		
IN SERVICE: - -	WEST VIRGINIA SECONDARY	FILE No. R-	
	CADD or DWG. No. 81240549.06	SHEET No. 6 of 19	

REVISION INITIALS

PROPERTY
PENNSYLVANIA R.R.

3000D2 PROGRAMMING CHART	(LEVEL: J)
NUMBER OF TRACK TRANSCEIVERS	1
T1: FREQUENCY	525Hz
T2: FREQUENCY	---Hz
T1: UNIDIRECTIONAL/BIDIRECTIONAL	BI
T2: UNIDIRECTIONAL/BIDIRECTIONAL	---
T1: XMIT LEVEL (MAX/MED)	MED
T2: XMIT LEVEL (MAX/MED)	---
T1: PREDICTOR/MOTION SENSOR	PRED
T2: PREDICTOR/MOTION SENSOR	----
T1: WARNING TIME	30 Sec
T2: WARNING TIME	-- Sec
T1: APPROACH DISTANCE	1751 Ft
T2: APPROACH DISTANCE	---- Ft
UAX1 PICKUP DELAY (UAX) (0 = OFF)	0 Sec
ENA/UAX2 DELAY (0 = ENA)	-- Sec
T1: ISLAND DISTANCE	142 Ft
T2: ISLAND DISTANCE	--- Ft
NUMBER OF DAX'S	0 Ea
DAX A TRACK ASSIGNMENT (T1/T2)	---
DAX A DISTANCE (0 = PREEMPT)	Ft
DAX A WARNING TIME	Sec
DAX B TRACK ASSIGNMENT (T1/T2)	---
DAX B DISTANCE (0 = PREEMPT)	Ft
DAX B WARNING TIME	Sec
DAX C TRACK ASSIGNMENT (T1/T2)	---
DAX C DISTANCE (0 = PREEMPT)	Ft
DAX C WARNING TIME	Sec
DAX D TRACK ASSIGNMENT (T1/T2)	---
DAX D DISTANCE (0 = PREEMPT)	Ft
DAX D WARNING TIME	Sec
SLAVING (MASTER/SLAVE)	MASTER
PASSWORD ENABLED	NO
RECORDER INSTALLED	NO

3000D2 PROGRAMMING NOTES:

1) AVAILALBE WHEN "TRANSFER DELAY MS TO GCP" AND "PRIME PREDICTION OFFSET" IS ON
2) AVAILABLE WHEN "TRANSFER DELAY MS TO GCP" AND DAX DISTANCE IS GREATER THAN ZERO
3) AVAILABLE WHEN "ENHANCED DETECTION" IS ON
4) AVAILABLE WHEN "LOW EZ DETECTION" IS ON
5) AVAILABLE WHEN "POSITIVE START" IS ON

EXPANDED PROGRAMMING

T1: SWITCH TO MS (ENTER EZ VALUE)	10 %	
T2: SWITCH TO MS (ENTER EZ VALUE)	-- %	
T1: TRANSFER DELAY MS TO GCP (0 = OFF)	0 Sec	
T2: TRANSFER DELAY MS TO GCP (0 = OFF)	-- Sec	
T1: TRANSFER MS TO GCP PRIME (ON/OFF)	---	(1)
T2: TRANSFER MS TO GCP PRIME (ON/OFF)	---	(1)
T1: TRANSFER MS TO GCP DAX A (ON/OFF)	---	(2)
T2: TRANSFER MS TO GCP DAX A (ON/OFF)	---	(2)
T1: TRANSFER MS TO GCP DAX B (ON/OFF)	---	(2)
T2: TRANSFER MS TO GCP DAX B (ON/OFF)	---	(2)
T1: TRANSFER MS TO GCP DAX C (ON/OFF)	---	(2)
T2: TRANSFER MS TO GCP DAX C (ON/OFF)	---	(2)
T1: TRANSFER MS TO GCP DAX D (ON/OFF)	---	(2)
T2: TRANSFER MS TO GCP DAX D (ON/OFF)	---	(2)
T1: PRIME PREDICTION OFFSET (0 = OFF)	0 Ft	
T2: PRIME PREDICTION OFFSET (0 = OFF)	-- Ft	
PICKUP DELAY PRIME	15 Sec	
PICKUP DELAY DAX A	-- Sec	
PICKUP DELAY DAX B	-- Sec	
PICKUP DELAY DAX C	-- Sec	
PICKUP DELAY DAX D	-- Sec	
T1: ENHANCED DETECTION (ON/OFF)	OFF	
T2: ENHANCED DETECTION (ON/OFF)	---	
BACK-TO-BACK T1 AND T2 (NO/YES)	---	(3)
T1: STATION STOP TIMER	10 Sec	(3)
T2: STATION STOP TIMER	-- Sec	(3)
T1: NUMBER OF TRACK WIRES (4/6)	4	
T2: NUMBER OF TRACK WIRES (4/6)	-	
T1: LOW EX ADJUSTMENT	0	
T2: LOW EX ADJUSTMENT	--	
T1: LOW EZ DETECTION	OFF	
T2: LOW EZ DETECTION	---	
T1: LOW EZ DETECTION TIMER (ON/OFF)	10 Min	(4)
T2: LOW EZ DETECTION TIMER (ON/OFF)	-- Min	(4)
T1: POSITIVE START (EZ LEVEL) (0 = OFF)	0	
T2: POSITIVE START (EZ LEVEL) (0 = OFF)	--	
T1: POSITIVE START TIMEOUT (0 = NONE)	-- Min	(5)
T2: POSITIVE START TIMEOUT (0 = NONE)	-- Min	(5)
SET AT OPERATION (NORMAL/DIAGNOSTIC)	NORMAL	
DIAGNOSTIC MESSAGES (ON/OFF)	ON	
DAX MESSAGES (ON/OFF)	ON	
ADVANCE PREEMPT TIMER (0 = OFF)	0	
T1: MOTION SENSING LEVEL (0 = NORMAL)	0 %	
T2: MOTION SENSING LEVEL (0 = NORMAL)	-- %	

✳ = 1ST SLOT AT LEFT END OF BAY

MODEL 3000D2 GCP MODULE ASSEMBLIES

	UPPER BAY										LOWER BAY										
MODULES POSITION	M1	M2	M3	M4	M5	M6	M7	M8	M9	M10	M11	M12	M13	M14	M15	M16	M17	M18	M19	M20	M21
MODULE NUMBERS	80211-F(1) ✳ ISL	80211-F(2) ISL	80012 T/R 1	80012 T/R 2	80013 RLY DRV	80214 PROCS	80255 REC-INTF	80016 (1) DAX	80016 (2) DAX	80020 +80017	80211-F(1) ✳ ISL	80211-F(2) ISL	80012 T/R 1	80012 T/R 2	80013 RLY DRV	80214 PROCS	80255 REC-INTF	80016 (1) DAX	80016 (2) DAX	80020 +80017	80028 XFRTMR
MODULES USED	X		X		X	X	X			X	X		X		X	X	X			X	X
							**										**				

NOTES:

1 - SEE IPI INSTRUCTION AND INSTALLATION MANUAL FOR 80211 ISLAND CALIBRATION PROCEDURE.

2 - TOGGLE SWITCH ON MOTHER BOARD:
UP = DUAL FREQ.
DOWN = SINGLE FREQ.

** = 80214 & 80255 (WITH JUMPER) CARDS AND E-LEVEL OR LATER SOFTWARE NEEDED FOR SEAR II / ECHELON CAPABILITIES.

PANEL "A3" 3000D2 GCP SET-UP

DESIGNED BY: KSW 06-07-06	NORFOLK SOUTHERN		
DRAWN BY: SSC 06-07-06	OFFICE OF ASS'T. VICE PRESIDENT COMM. & SIGNAL, ATLANTA, GA.	M.P.: RR-54.91	
CHECKED BY: LAR 06-15-06	HOBSON JCT. TO REFUGEE MOXAHALA, OH FLGS AT SR-13 S.		
	WEST VIRGINIA SECONDARY	FILE No. R-	
IN SERVICE: - -	CADD or DWG. No. 81240549.07	SHEET No. 7 of 19	

REVISION INITIALS

PROPERTY
PENNSYLVANIA R.R.

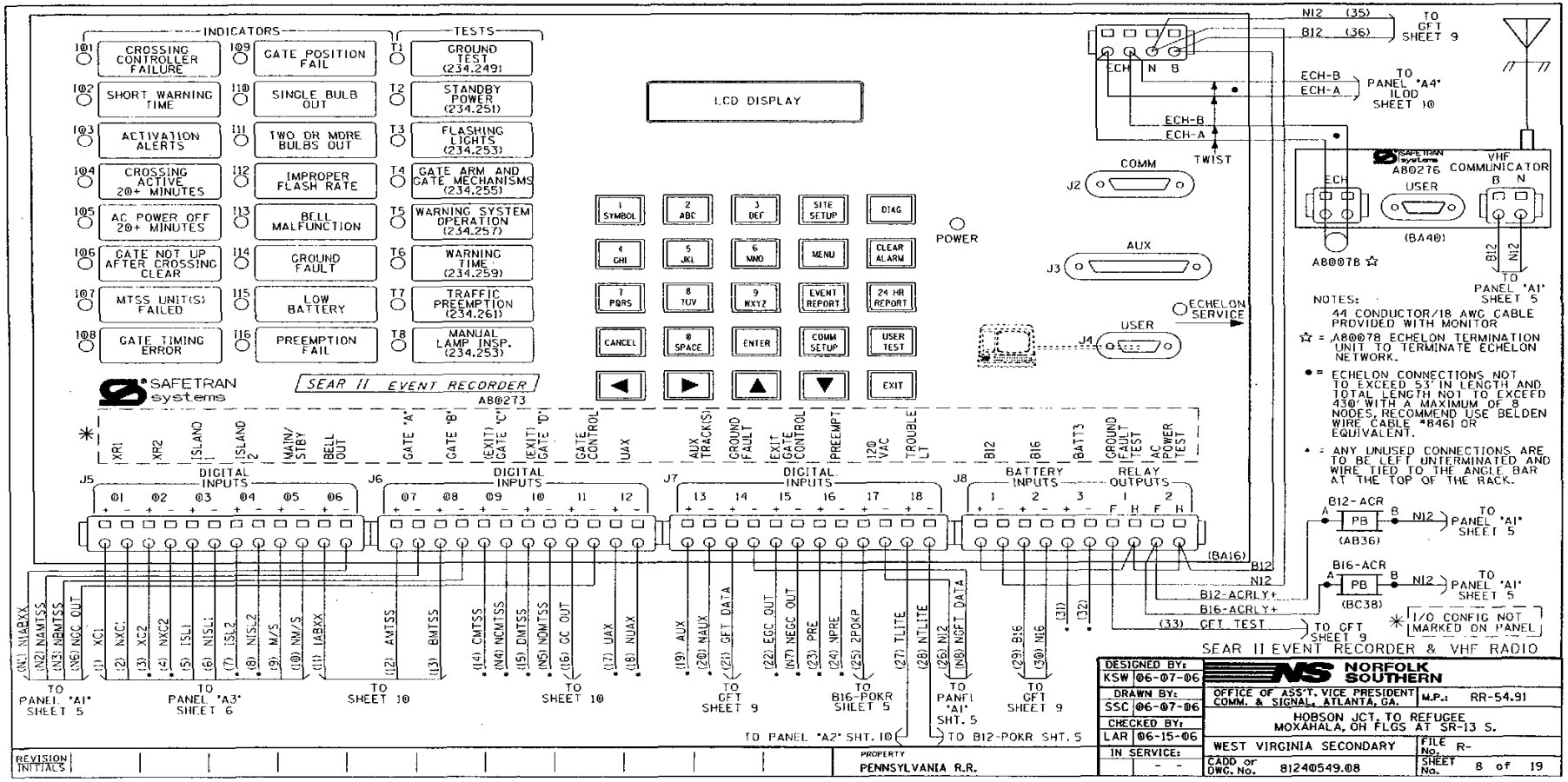
INDICATORS
TESTS
CROSSING CONTROLLER FAILURE
SHORT WARNING TIME
ACTIVATION ALERTS
CROSSING ACTIVE 20+ MINUTES
AC POWER OFF 20+ MINUTES
GATE NOT UP AFTER CROSSING CLEAR
MTSS UNIT(S) FAILED
GATE TIMING ERROR
GATE POSITION FAIL
SINGLE BULB OUT
TWO OR MORE BULBS OUT
IMPROPER FLASH RATE
BELL MALFUNCTION
GROUND FAULT
LOW BATTERY
PREEMPTION FAIL
GROUND TEST (234.249)
STANDBY POWER (234.251)
FLASHING LIGHTS (234.253)
GATE ARM AND GATE MECHANISMS (234.255)
WARNING SYSTEM OPERATION (234.257)
WARNING TIME (234.259)
TRAFFIC PREEMPTION (234.261)
MANUAL LAMP INSP. (234.253)
LCD DISPLAY
POWER
SAFETRAN systems
SEAR II EVENT RECORDER
AB0273
DIGITAL INPUTS
BATTERY INPUTS
RELAY OUTPUTS
COMM
AUX
USER
ECHELON SERVICE
TWIST
VHF COMMUNICATOR
AB0276
AB0078
(BA40)
TO GFT SHEET 9
TO PANEL "A4" ILOD SHEET 10
TO PANEL "A1" SHEET 5
NOTES:
44 CONDUCTOR/18 AWG CABLE PROVIDED WITH MONITOR
☆ = AB0078 ECHELON TERMINATION UNIT TO TERMINATE ECHELON NETWORK.
• = ECHELON CONNECTIONS NOT TO EXCEED 53' IN LENGTH AND TOTAL LENGTH NOT TO EXCEED 430' WITH A MAXIMUM OF 8 NODES. RECOMMEND USE BELDEN WIRE CABLE #8461 OR EQUIVALENT.
• = ANY UNUSED CONNECTIONS ARE TO BE LEFT UNTERMINATED AND WIRE TIED TO THE ANGLE BAR AT THE TOP OF THE RACK.
B12-ACR
B16-ACR
(AB36)
(BC38)
I/O CONFIG NOT MARKED ON PANEL
TO PANEL "A2" SHT. 10
TO B12-POKR SHT. 5
TO PANEL "A1" SHT. 5
TO B16-POKR SHEET 5
TO GFT SHEET 9
TO PANEL "A3" SHEET 6
TO SHEET 10
SEAR II EVENT RECORDER & VHF RADIO
DESIGNED BY: KSW 06-07-06
DRAWN BY: SSC 06-07-06
CHECKED BY: LAR 06-15-06
IN SERVICE:
NORFOLK SOUTHERN
OFFICE OF ASS'T. VICE PRESIDENT COMM. & SIGNAL, ATLANTA, GA.
M.P.: RR-54.91
HOBSON JCT. TO REFUGEE
MOXAHALA, OH FLGS AT SR-13 S.
WEST VIRGINIA SECONDARY
FILE No. R-
CADD or DWG. No. 81240549.08
SHEET No. 8 of 19
PROPERTY
PENNSYLVANIA R.R.
REVISION INITIALS

	SITE SET UP PROCEDURE	
	FUNCTION	LED DISPLAY
	DATE	- -
	TIME	:
	DAYLIGHT SAVINGS TIME	YES
	TIME ZONE	EST
	SITE NAME	SR-13 S.
	DOT NUMBER	513 427V
	MILEPOST	RR-54.91
	TESTER TYPE	CROSSING
	DATE FORMAT	MM-DD-YYYY
	TEMP FORMAT	FAHRENHEIT
	SITE TYPE	NO COMMUNICATION
	SITE ATCS	7.550.133.155.03.01
***	OFFICE ATCS ADDRESS	2.000.00.0000
***	POLL ID	1
***	OFFICE FB/F9	YES
***	OFFICE COMM DEVICE	SPREAD SPECTRUM RADIO
***	DIAL MODEM PORT	AUX/COMM
***	PHONE NUMBER	(OFFICE NUMBER)
***	INIT STRING	(LEAVE BLANK)
***	BACKUP SITE ADDRESS 1	
***	BACKUP SITE ADDRESS 2	
***	FIELD COMM	
****	USER PORT	BAUD 57600, N, 8, 1, NONE
****	AUX PORT	BAUD 9600, N, 8, 1, NONE
****	COMM PORT	BAUD 9600, N, 8, 1, NONE

VERIFY NUMBER OF BULBS	
CURR 1: LAMP SET UP	8 BULBS
CURR 2: LAMP SET UP	8 BULBS

CONTROL SYSTEM CONFIGURATION MENU QUESTIONS	
THE QUESTION	SELECT FROM MENU OPTION
RESET NAMES AND MODULES?	YES
NUMBER OF TRACKS?	1
NUMBER OF XR INPUTS?	1
CONSTANT WARNING DEVICE	GCP
CROSSING CONTROLLER?	SSCC III (A, PLUS)
MAIN / STANDBY	YES
AUXILIARY TRACKS?	NO
AUX TRACK	(SET IF AUX TRACKS = YES)
GATES?	2
EXIT GATES?	0
UAX?	NOT INSTALLED
BATTERY BANKS?	2
PREEMPTION?	NO
ILOD MODULES?	1
LAMP TYPE?	NORMAL
AUTO INSPECTIONS?	YES
BELL SENSOR?	** 1
BELL SENSOR INPUT 7	** YES
BELL SENSOR INPUT 8	** NO
BELL SENSOR INPUT 9	** NO
BELL SENSOR INPUT 10	** NO
BELL ON?	GATES LOWERING
GATE TIP SENSORS?	YES
GROUND FAULT DETECTORS?	YES
CHANNEL 1	161.475 MHZ
CHANNEL 2	NONE
FULL APPROACH MOVE ALARMS	ACTIVATE
SSCC ATCS ADDRESS	7.550.133.155.07.01

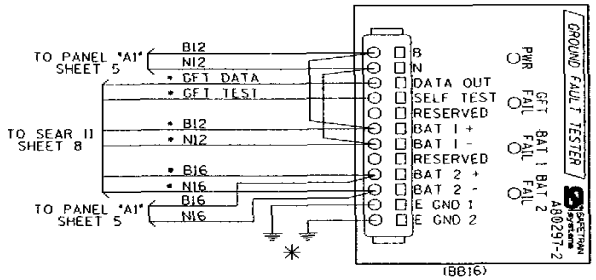

VERIFY THE BATTERY SUPPLY VOLTAGES	
B12 BATTERY VOLTAGE AT INPUT DC1	VOLT 1: .
B16 BATTERY VOLTAGE AT INPUT DC2	VOLT 2: .

NOTES:
ALL WIRING TO BE #16AWG UNLESS NOTED OTHERWISE

* = CABLE PROVIDED WITH SEAR II

** = OPTIONS: IF BELL SENSOR = 0, THEN BELL FIELDS ARE NOT USED.

*** = IF SITE TYPE = NO COMMUNICATION, THEN THESE OPTIONS ARE NOT DISPLAYED

**** = THESE SETTINGS SHOULD BE LEFT AT THE DEFAULT SETTING.

✳ = CONNECT "E GND 1" AND "E GND 2" TO INDEPENDENT GROUND POINTS ON SIDE A AND SIDE B.

SEAR II SET UP CHART
& GROUND FAULT TESTER

DESIGNED BY: KSW 06-07-06	NORFOLK SOUTHERN	
DRAWN BY: SSC 06-07-06	OFFICE OF ASS'T. VICE PRESIDENT COMM. & SIGNAL, ATLANTA, GA.	M.P.: RR-54.91
CHECKED BY: LAR 06-15-06	HOBSON JCT. TO REFUGEE MOXAHALA, OH FLGS AT SR-13 S.	
IN SERVICE: - -	WEST VIRGINIA SECONDARY	FILE No. R-
	CADD or DWG. No. 81240549.09	SHEET No. 9 of 19

REVISION INITIALS

PROPERTY
PENNSYLVANIA R.R.

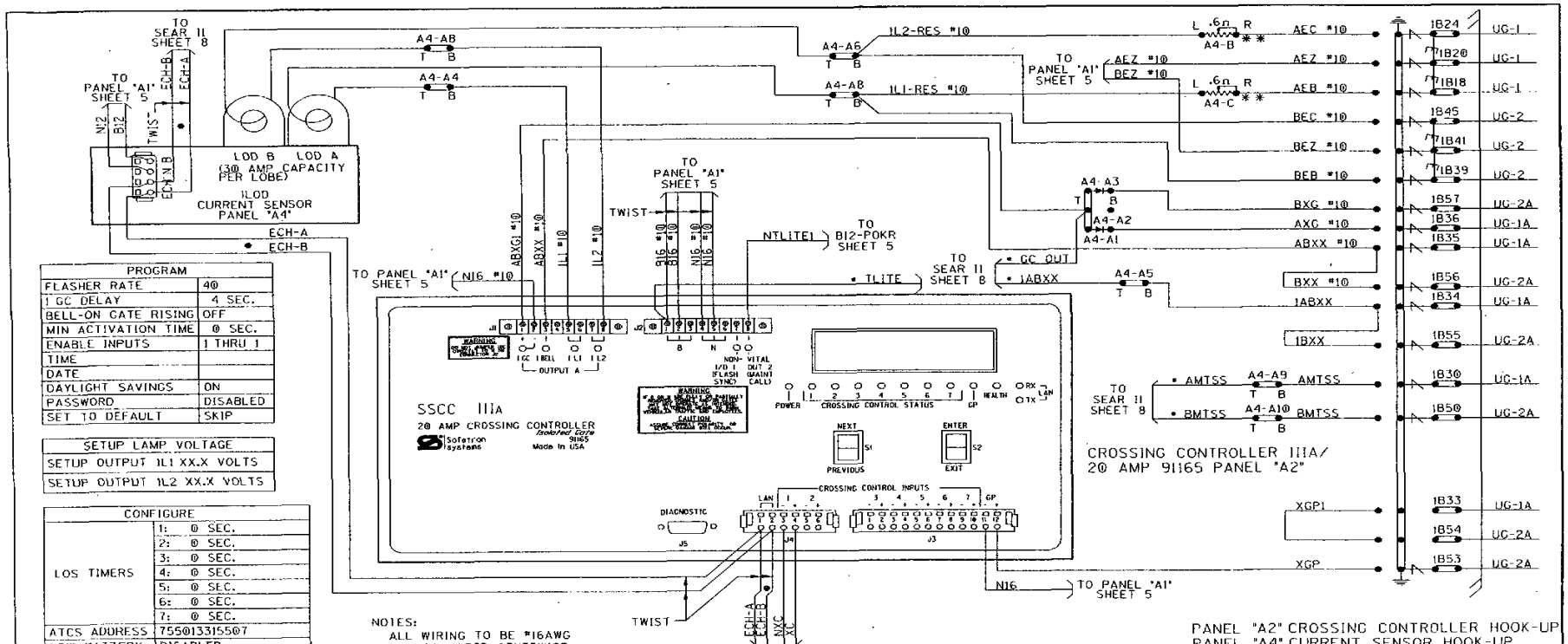

PROGRAM	
FLASHER RATE	40
1 GC DELAY	4 SEC.
BELL-ON GATE RISING	OFF
MIN ACTIVATION TIME	0 SEC.
ENABLE INPUTS	1 THRU 1
TIME	
DATE	
DAYLIGHT SAVINGS	ON
PASSWORD	DISABLED
SET TO DEFAULT	SKIP

SETUP LAMP VOLTAGE
SETUP OUTPUT 1L1 XX.X VOLTS
SETUP OUTPUT 1L2 XX.X VOLTS

CONFIGURE		
LOS TIMERS	1:	0 SEC.
	2:	0 SEC.
	3:	0 SEC.
	4:	0 SEC.
	5:	0 SEC.
	6:	0 SEC.
	7:	0 SEC.
ATCS ADDRESS	755013315507	
LOW BATTERY	DISABLED	
AUX I/O	NV OUTPUT	

TEST CONFIGURE	
LAMP TEST CANCEL TIMER	5 MIN.
LAMP TEST DELAY TIMER	30 SEC.
LAMP TEST ON TIMER	15 SEC.

NOTES:
ALL WIRING TO BE #16AWG UNLESS NOTED OTHERWISE.

• = CABLE PROVIDED WITH SEAR II

⊢ = DIODE SAFETRAN PN BA299

* * = RESISTORS TO BE INSTALLED TO LAMPS WITH SHORTEST CABLE RUN

• = ECHELON CONNECTIONS NOT TO EXCEED 53' IN LENGTH AND TOTAL LENGTH NOT TO EXCEED 430' WITH A MAXIMUM OF 8 NODES. RECOMMEND USE BELDEN WIRE CABLE #8461 OR EQUIVALENT.

PANEL "A2" CROSSING CONTROLLER HOOK-UP
PANEL "A4" CURRENT SENSOR HOOK-UP

DESIGNED BY: KSW 06-07-06	NORFOLK SOUTHERN
DRAWN BY: SSC 06-07-06	OFFICE OF ASS'T. VICE PRESIDENT COMM. & SIGNAL, ATLANTA, GA. — M.P.: RR-54.91
CHECKED BY: LAR 06-15-06	HOBSON JCT. TO REFUGEE MOXAHALA, OH FLGS AT SR-13 S.
IN SERVICE: - -	WEST VIRGINIA SECONDARY — FILE No. R-
	CADD or DWG. NO. 81240549.10 — SHEET No. 10 of 19

REVISION INITIALS

PROPERTY
PENNSYLVANIA R.R.

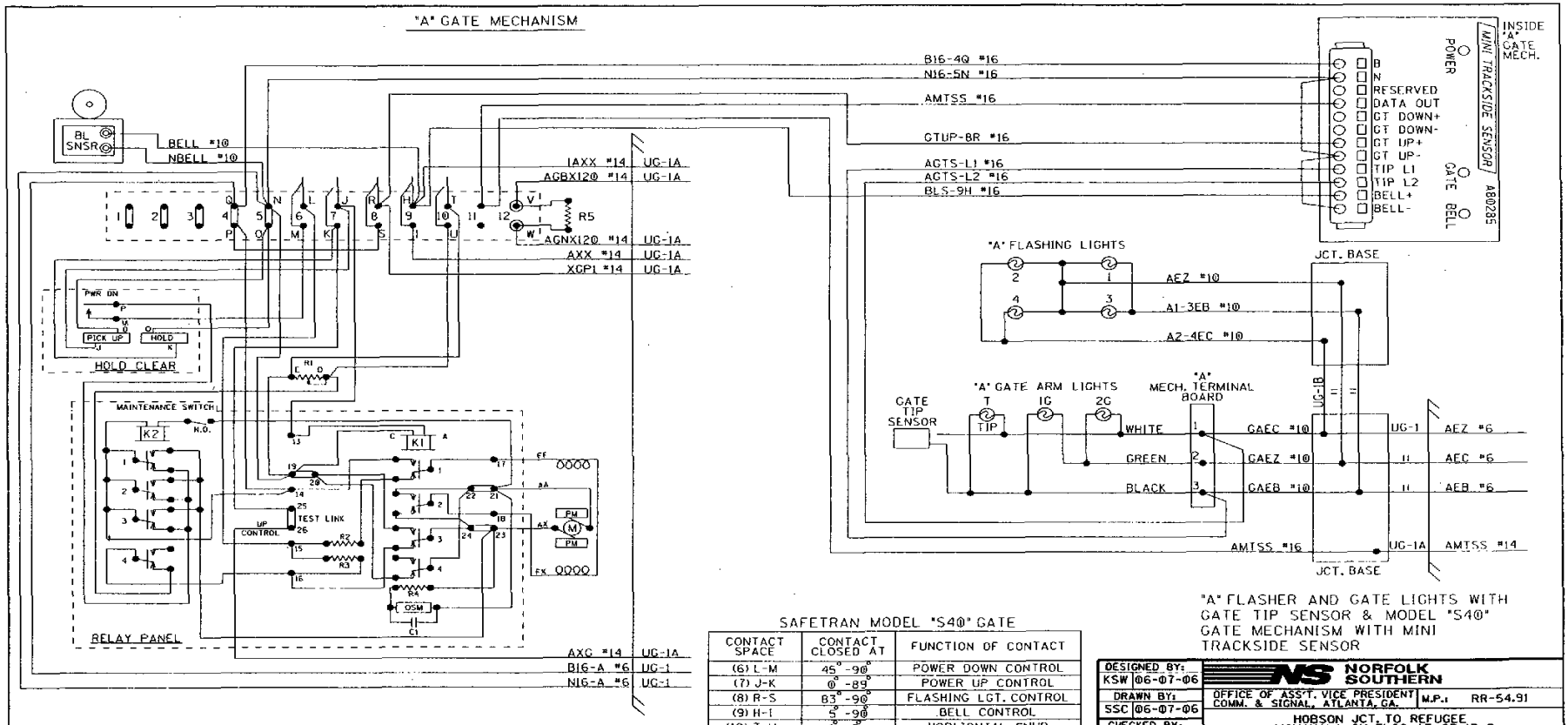

"A" FLASHER AND GATE LIGHTS WITH GATE TIP SENSOR & MODEL "S40" GATE MECHANISM WITH MINI TRACKSIDE SENSOR

SAFETRAN MODEL "S40" GATE

CONTACT SPACE	CONTACT CLOSED AT	FUNCTION OF CONTACT
(6) L-M	45°-90°	POWER DOWN CONTROL
(7) J-K	0°-89°	POWER UP CONTROL
(8) R-S	83°-90°	FLASHING LGT. CONTROL
(9) H-I	5°-90°	BELL CONTROL
(10) T-U	0°-5°	HORIZONTAL SNUB

DESIGNED BY: KSW 06-07-06	NORFOLK SOUTHERN	
DRAWN BY: SSC 06-07-06	OFFICE OF ASS'T. VICE PRESIDENT COMM. & SIGNAL, ATLANTA, GA.	M.P.: RR-54.91
CHECKED BY: LAR 06-15-06	HOBSON JCT. TO REFUGEE MOXAHALA, OH FLGS AT SR-13 S.	
IN SERVICE: - -	WEST VIRGINIA SECONDARY	FILE No. R-
	CADD or DWG. No. 81240549.11	SHEET No. 11 of 19

REVISION INITIALS

PROPERTY: PENNSYLVANIA R.R.

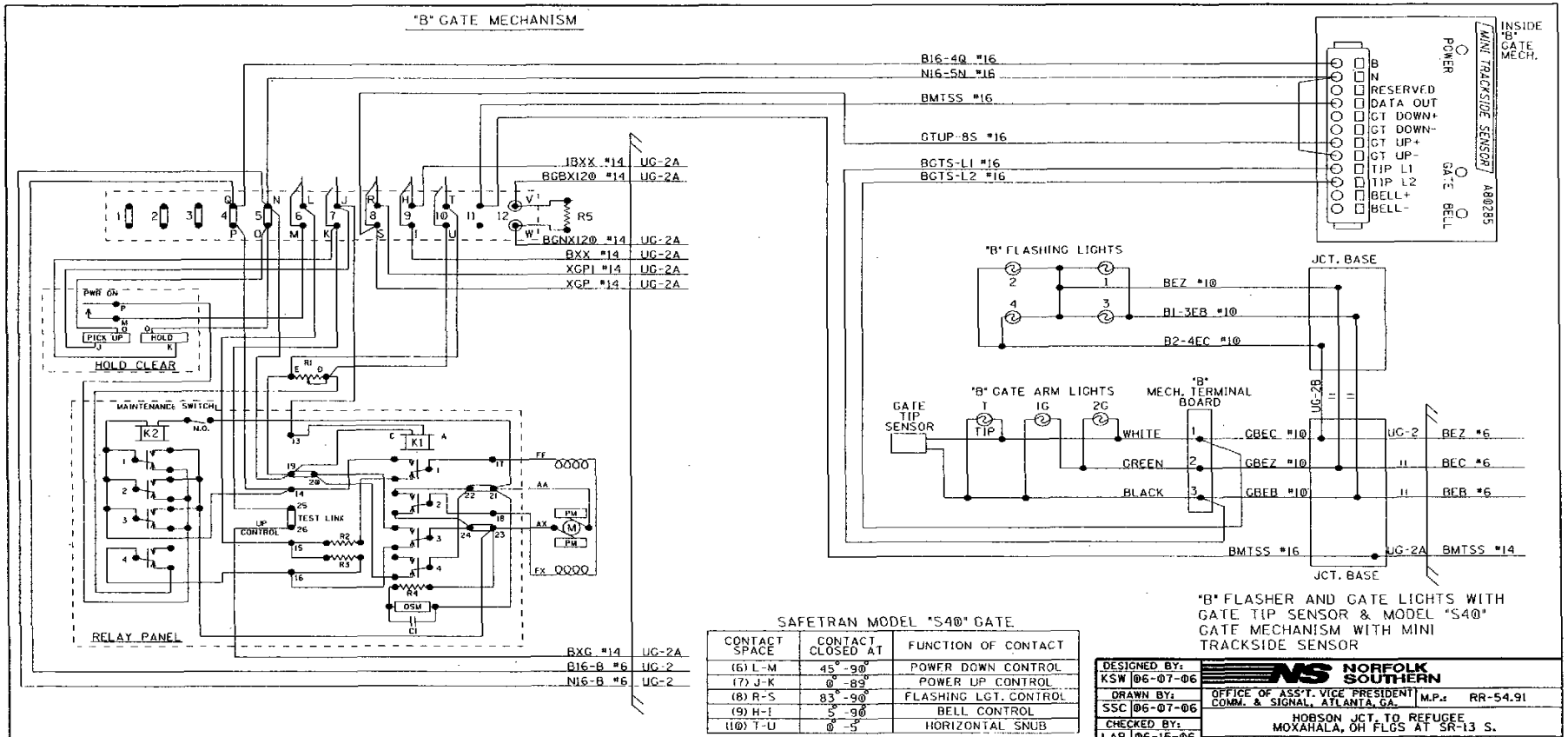

"B" FLASHER AND GATE LIGHTS WITH GATE TIP SENSOR & MODEL "S40" GATE MECHANISM WITH MINI TRACKSIDE SENSOR

SAFETRAN MODEL "S40" GATE

CONTACT SPACE	CONTACT CLOSED AT	FUNCTION OF CONTACT
(6) L-M	45°-90°	POWER DOWN CONTROL
(7) J-K	0°-89°	POWER UP CONTROL
(8) R-S	83°-90°	FLASHING LGT. CONTROL
(9) H-I	5°-90°	BELL CONTROL
(10) T-U	0°-5°	HORIZONTAL SNUB

DESIGNED BY: KSW 06-07-06	NORFOLK SOUTHERN	
DRAWN BY: SSC 06-07-06	OFFICE OF ASS'T. VICE PRESIDENT COMM. & SIGNAL, ATLANTA, GA.	M.P.: RR-54.91
CHECKED BY: LAR 06-15-06	HOBSON JCT. TO REFUGEE MOXAHALA, OH FLGS AT SR-13 S.	
IN SERVICE: - -	WEST VIRGINIA SECONDARY	FILE No. R-
	CADD or DWG. No. 81240549.12	SHEET No. 12 of 19

REVISION INITIALS

PROPERTY PENNSYLVANIA R.R.

LEFT TWO ROWS TERMINAL BOARD 1

"1A" "1B"

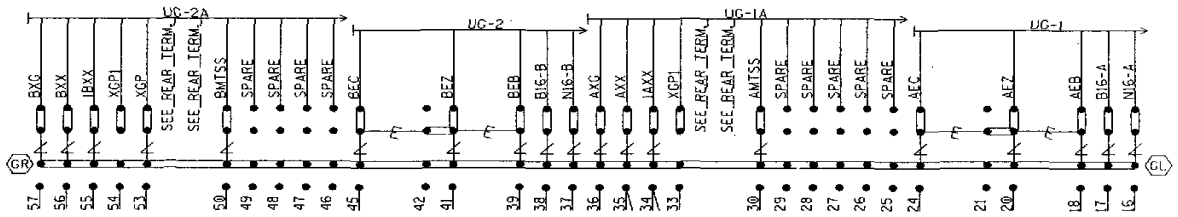

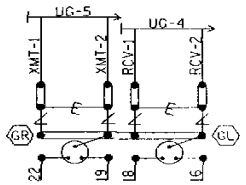

NOTE: INSTALL TEST LINKS ON ALL TRACK WIRES AND ON ALL LOW VOLTAGE UNDERGROUND CABLE TERMINATIONS.

SEE FARADAY SHIELD DETAILS - 1A & 1B FOR HOW THIS PORTION OF THE FARADAY SHIELD IS PREDRILLED. ONLY INSTALL AND USE THE TERMINALS NEEDED.

= Heavy Duty Equalizer (022700-1X)

= Clearview Lightning Arrester (022585-1X)

= LPC-10560-51

GR / GL = TERMINALS GROUNDED TO SHIELD. 4 POST BLOCKS USE EITHER - GR - SERMMI PART NO. 61278 GL - SERMMI PART NO. 61278-1.

BACKBOARD DETAIL - 1A & 1B

DESIGNED BY: KSW 06-07-06	NORFOLK SOUTHERN		
DRAWN BY: SSC 06-07-06	OFFICE OF ASS'T. VICE PRESIDENT COMM. & SIGNAL, ATLANTA, GA.	M.P.: RR-54.91	
CHECKED BY: LAR 06-15-06	HOBSON JCT. TO REFUGEE MOXAHALA, OH FLGS AT SR-13 S.		
IN SERVICE: - -	WEST VIRGINIA SECONDARY	FILE No. R-	
	CADD or DWG. No. 81240549.13	SHEET No. 13 of 19	

REVISION INITIALS	PROPERTY PENNSYLVANIA R.R.

REAR VIEW OF LEFT TWO ROWS TERMINAL BOARD 1
"1A"
"1B"

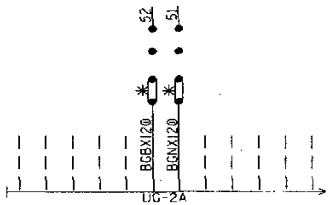

(SEE PREVIOUS SHEET FOR OTHER WIRES IN CABLE)

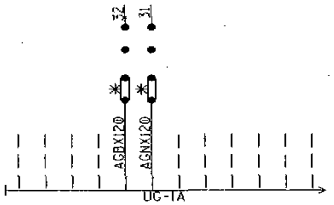

(SEE PREVIOUS SHEET FOR OTHER WIRES IN CABLE)

NOTE: ALL 120VAC AND ABOVE WILL BE WIRED TO THE REAR OF FARADAY BACKBOARD. INSULATED NUTS MUST BE USED ON ALL TERMINALS.

✳ = CLOSED DURING WINTER MONTHS

REAR OF FARADAY BACKBOARD
REAR BACKBOARD DETAIL - 1A & 1B

DESIGNED BY: KSW 06-07-06	NORFOLK SOUTHERN		
DRAWN BY: SSC 06-07-06	OFFICE OF ASS'T. VICE PRESIDENT COMM. & SIGNAL, ATLANTA, GA.	M.P.: RR-54.91	
CHECKED BY: LAR 06-15-06	HOBSON JCT. TO REFUGEE MOXAHALA, OH FLGS AT SR-13 S.		
IN SERVICE: - -	WEST VIRGINIA SECONDARY	FILE No. R-	
	CADD or DWG. No. 81240549.14	SHEET No. 14 of 19	

REVISION INITIALS												PROPERTY PENNSYLVANIA R.R.

NOTE: IF THE FARADAY SHIELD WOULD EVER NEED TO BE DRILLED IN THE FIELD, PROPER PRECAUTIONS MUST BE TAKEN TO INSURE METAL SHAVINGS DO NOT GET INTO EXISTING TERMINALS/WIRES.

AREA BELOW IS SCALED WITH AS=.75

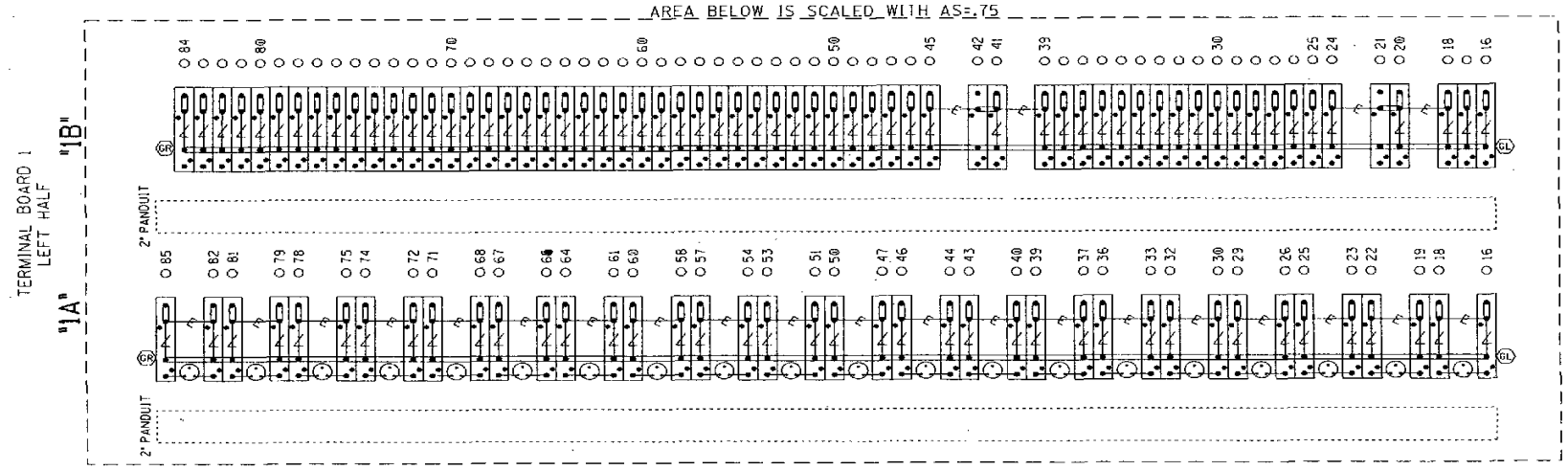

= Heavy Duty Equalizer (022700-1X)

Clearview = Lightning Arrester (022585-1X)

= LPC-10560-51

TERMINAL BOARD 1
LEFT TWO ROWS
FARADAY SHIELD DETAIL - 1A & 1B

= INDICATES PLACEMENT OF PANDUIT

THIS SHEET IS FOR REFERENCE ONLY, TO REFLECT HOW THE FARADAY SHIELD IS PREDRILLED. ONLY INSTALL AND USE THE TERMINALS NEEDED.

GR / GL = TERMINALS GROUNDED TO SHIELD.
4 POST BLOCKS USE EITHER -
GR - SERMMI PART NO. 61278
GL - SERMMI PART NO. 61278-1.

DESIGNED BY: KSW 06-07-06	NORFOLK SOUTHERN
DRAWN BY: SSC 06-07-06	OFFICE OF ASS'T. VICE PRESIDENT COMM. & SIGNAL, ATLANTA, GA. — M.P.: RR-54.91
CHECKED BY: LAR 06-15-06	HOBSON JCT. TO REFUGEE MOXAHALA, OH FLGS AT SR-13 S.
IN SERVICE: - -	WEST VIRGINIA SECONDARY — FILE No. R-
	CADD or DWG. No. 81240549.15 — SHEET No. 15 of 19

REVISION INITIALS

PROPERTY
PENNSYLVANIA R.R.

NOTE: IF THE FARADAY SHIELD WOULD EVER NEED TO BE DRILLED IN THE FIELD, PROPER PRECAUTIONS MUST BE TAKEN TO INSURE METAL SHAVINGS DO NOT GET INTO EXISTING TERMINALS/WIRES.

AREA BELOW IS SCALED WITH AS=.75

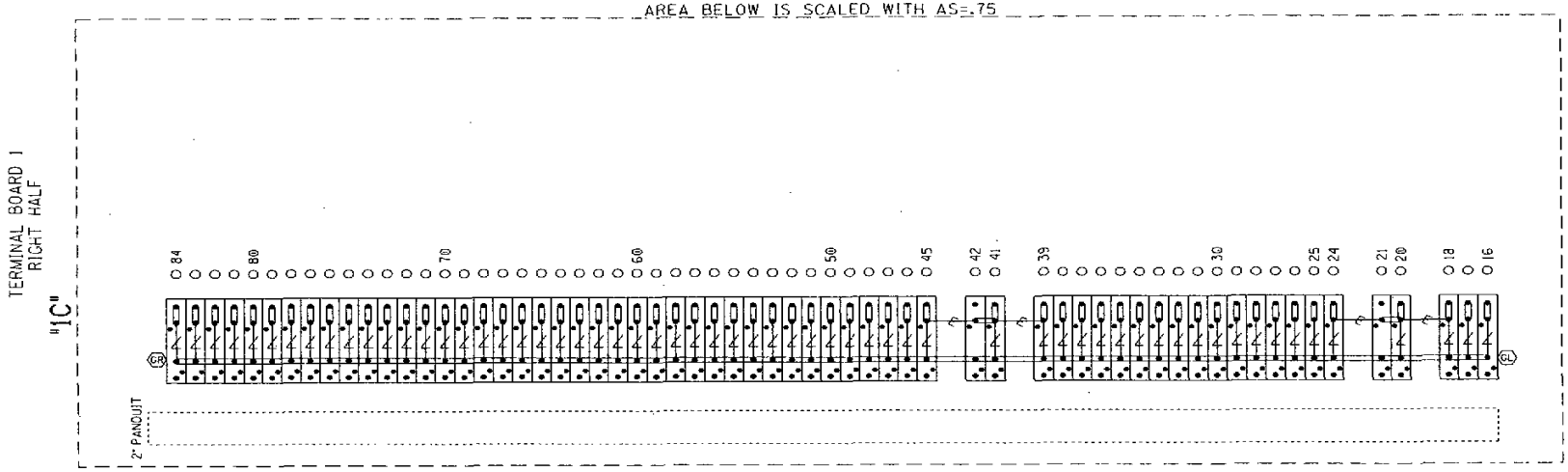

= Heavy Duty Equalizer (022700-1X)

Clearview = Lightning Arrester (022585-1X)

= LPC-10560-51

TERMINAL BOARD 1
RIGHT ROW
FARADAY SHIELD DETAIL - 1C

= INDICATES PLACEMENT OF PANDUIT

THIS SHEET IS FOR REFERENCE ONLY. TO REFLECT HOW THE FARADAY SHIELD IS PREDRILLED. ONLY INSTALL AND USE THE TERMINALS NEEDED.

GR / GL = TERMINALS GROUNDED TO SHIELD.
4 POST BLOCKS USE EITHER -
GR - SERMMI PART NO. 61278
GL - SERMMI PART NO. 61278-1.

DESIGNED BY: KSW 06-07-06	NORFOLK SOUTHERN	
DRAWN BY: SSC 06-07-06	OFFICE OF ASS'T. VICE PRESIDENT COMM. & SIGNAL, ATLANTA, GA.	M.P.: RR-54.91
CHECKED BY: LAR 06-15-06	HOBSON JCT. TO REFUGEE MOXAHALA, OH FLGS AT SR-13 S.	
IN SERVICE: - -	WEST VIRGINIA SECONDARY	FILE No. R-
	CADD or DWG. No. 81240549.16	SHEET No. 16 of 19

REVISION INITIALS

PROPERTY
PENNSYLVANIA R.R.

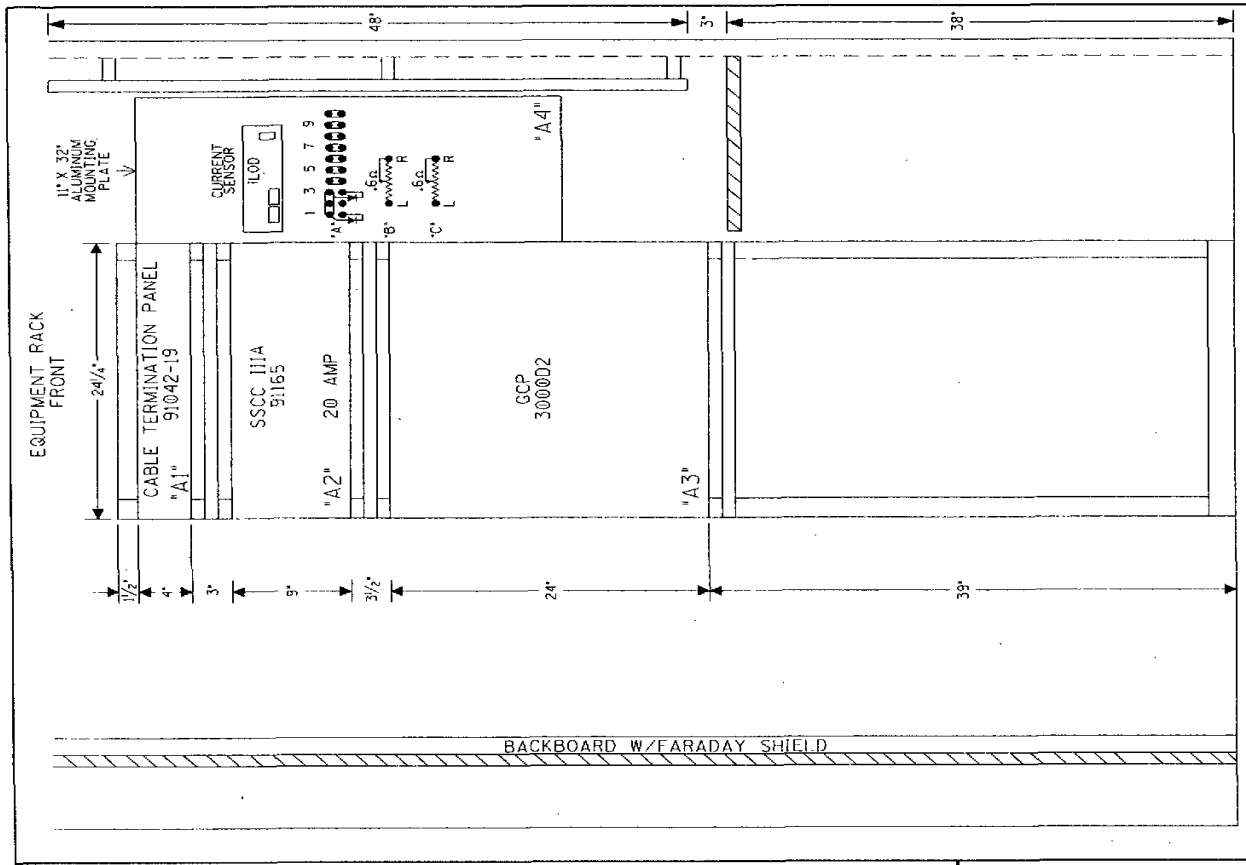

SIDE "C"

RACK PLACEMENT
6' X 6' HOUSE - SIDE "C"

DESIGNED BY: KSW 06-07-06	NORFOLK SOUTHERN		
DRAWN BY: SSC 06-07-06	OFFICE OF ASS'T. VICE PRESIDENT COMM. & SIGNAL, ATLANTA, GA.	M.P.:	RR-54.91
CHECKED BY: LAR 06-15-06	HOBSON JCT. TO REFUGEE MOXAHALA, OH FLGS AT SR-13 S.		
IN SERVICE: - -	WEST VIRGINIA SECONDARY	FILE No.	R-
	CADD or DWG. No. 81240549.17	SHEET No.	17 of 19

REVISION INITIALS

PROPERTY
PENNSYLVANIA R.R.

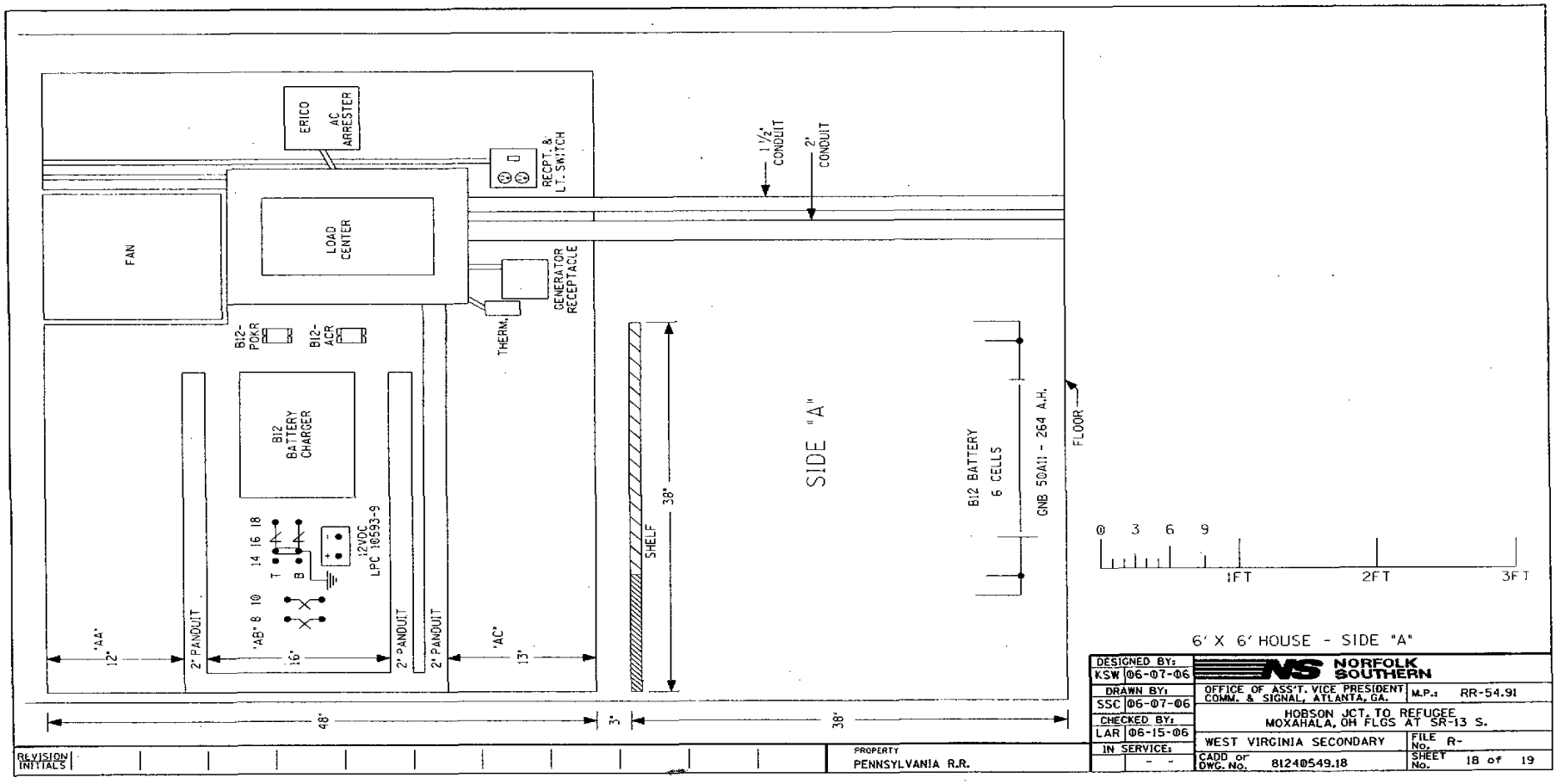

DESIGNED BY: KSW 06-07-06	NORFOLK SOUTHERN		
DRAWN BY: SSC 06-07-06	OFFICE OF ASS'T. VICE PRESIDENT COMM. & SIGNAL, ATLANTA, GA.	M.P.:	RR-54.91
CHECKED BY: LAR 06-15-06	HOBSON JCT. TO REFUGEE MOXAHALA, OH FLGS AT SR-13 S.		
IN SERVICE: - -	WEST VIRGINIA SECONDARY	FILE No.	R-
	CADD or DWG. No. 81240549.18	SHEET No.	18 of 19

REVISION INITIALS

PROPERTY
PENNSYLVANIA R.R.

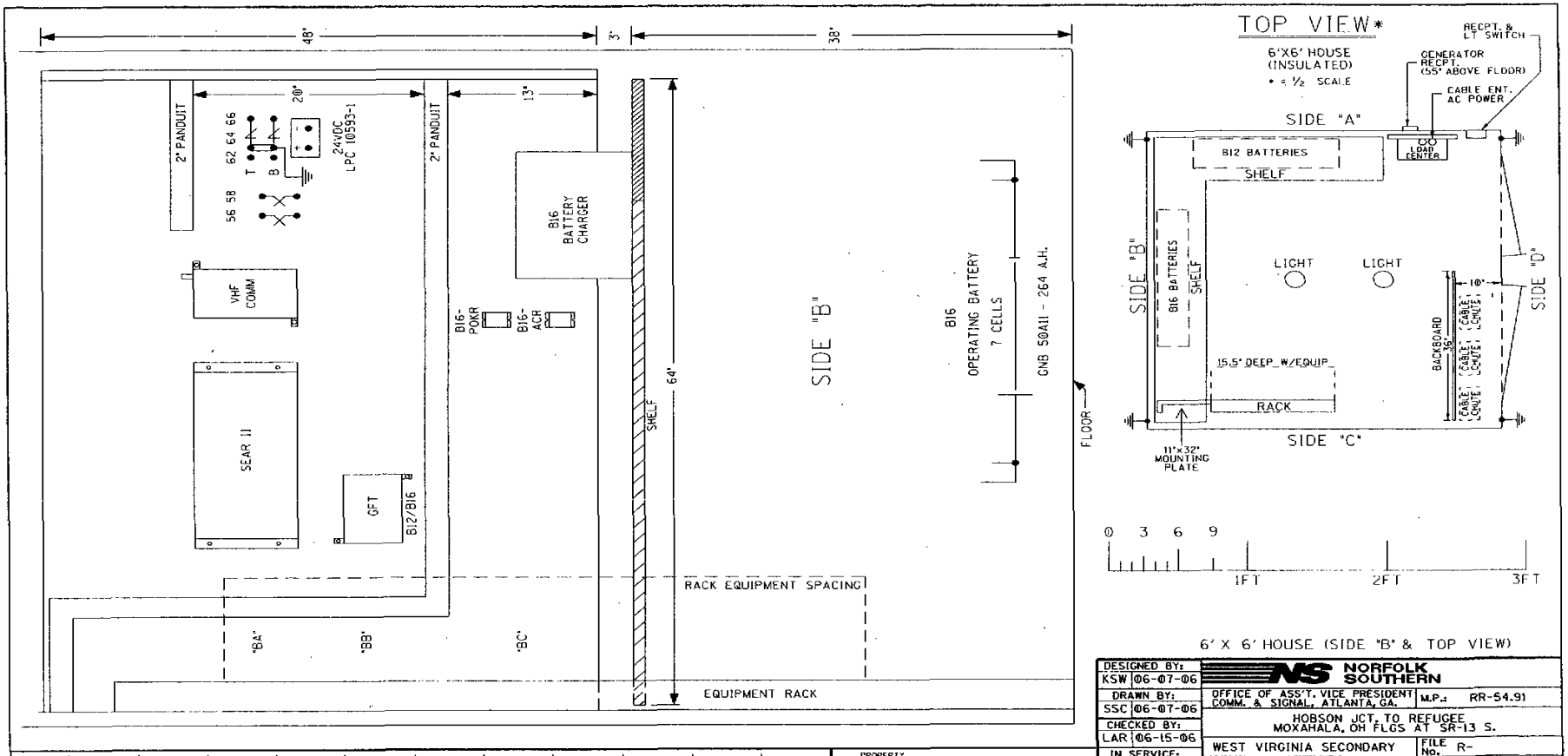

6' X 6' HOUSE (SIDE "B" & TOP VIEW)

DESIGNED BY: KSW 06-07-06	NORFOLK SOUTHERN	
DRAWN BY: SSC 06-07-06	OFFICE OF ASS'T. VICE PRESIDENT COMM. & SIGNAL, ATLANTA, GA.	M.P.: RR-54.91
CHECKED BY: LAR 06-15-06	HOBSON JCT. TO REFUGEE MOXAHALA, OH FLGS AT SR-13 S.	
IN SERVICE: - -	WEST VIRGINIA SECONDARY	FILE No. R-
	CADD or DWG. No. 81240549.19	SHEET No. 19 of 19

REVISION INITIALS

PROPERTY PENNSYLVANIA R.R.