Public Utilities
Commission of Ohio

Memo

To: Docketing Division

From: Jill Henry, Rail Specialist, Rail Division

Cc: PUCO Legal Department

Date: 1/27/2022

Re: PUCO Case No. 22-67-RR-FED- In the Matter of a Request for the Installation of Active Warning Devices at the Wheeling & Lake Erie Railroad Grade Crossing, DOT#002-038D, at SR 162 in Lorain County, Ohio.

On September 21, 2021, the Ohio Rail Development Commission (ORDC) authorized funding for Wheeling & Lake Erie Railroad (WE) to upgrade to lights and gates at SR 162 (DOT#002-038D) in Huron County, Ohio. The crossing was surveyed, on April 8, 2021, and was found to warrant the upgrade. The electric utility provider for this crossing is Lorain Medina Rural Electric.

The project will be paid for with 50% federal funds/50% railroad funds and is actual cost. The plans and estimates for the project in the amount of $249,560.79 have been approved. Construction may commence at once. **Staff requests a Finding & Order with completion of the project in nine months.** Staff requests that the following language be incorporated in the Finding & Order:

It is expected that all work necessary for FHWA acceptance of the warning devices will be completed by the in-service due date and that the <u>railroad will be responsible</u> for this work. This work includes, but is not limited to:

- **Any ancillary work to make the warning devices function as designed and visible to the roadway user, and**
- **MUTCD compliance, including minor roadway work if necessary.**

Please serve the following parties of record:

Wheeling & Lake Erie Railway Company
Tim Andrews
Signals & Communications Supervisor
100 E. First Street
Brewster, Ohio 44613

Ohio Rail Development Commission
Alan Bell
Manager, Grade Crossing Programs
1980 West Broad Street
Mail Stop #3140
Columbus, OH 43223

Ohio Department of Transportation
Jamie Lowry
Project Manager, Railroad Coordinator
District #3
906 Clark Avenue
Ashland, OH 44805-1989

Lorain Medina Rural Electric Cooperative
22898 West Road
PO BOX 158
Wellington, OH 44090

OHIO RAIL DEVELOPMENT COMMISSION
INTER-OFFICE COMMUNICATION

TO: **John Williams, Transportation Director, PUCO**

FROM: **Allen Bell, Manager, Safety Section, ORDC**

BY: **James Tucker, Project Manager, ORDC** J.T.

SUBJECT: **Lorain County, State Route 162.**
DOT #002-038D, PID 115370

DATE: **January 4, 2022**

The Ohio Rail Development Commission (ORDC) established a diagnostic survey at the subject location on April 8, 2021. The Diagnostic Team recommended that the existing warning devices will be upgraded to flashing lights and roadway gates. Copies of the diagnostic review form and the plan and estimate are attached.

PE has already been provided by the railroad. ORDC approves the site plans and estimates as provided. Please issue a construction-only order for the project outlined above for nine months. This construction authorization is made with the stipulation and understanding that any field work needs prior approval before the work begins. This authorization is made with the stipulation and understanding that an approved estimate may contain entries for items or activities that may be cited and found to be ineligible for federal participation during the project audit.

It is expected that all work necessary for FHWA acceptance of the warning devices will be completed by the in-service due date and that the railroad will be responsible for this work. This work includes, but is not limited to:

- any ancillary work to make warning devices function as designed and visible to the roadway user, and
- MUTCD compliance – including minor roadway work if necessary.

Thank you for your assistance with these matters.

Attachment: Diagnostic Review
PE Authorization
Plan & Estimate
Letter Agreement

c: Jill Henry, Rail Division Chief, PUCO
ORDC Project Manager (file)

January 4, 2022

Mr. Tim Andrews
Wheeling & Lake Erie Railway
100 East First Street
Brewster, Ohio 44613

RE: Lorain County, State Route 162.
DOT#002-038D, PID# 115370

Dear Mr. Andrews:

The plan dated February 8, 2018 and estimate dated December 20, 2021 for the referenced project has been reviewed and is acceptable. **Please note that the railroad must provide ORDC with a plan stamped by a professional engineer licensed in the State of Ohio prior to acceptance and close out of the project.** Wheeling & Lake Erie (WLE) may proceed with the construction of the proposed grade crossing warning system in accordance with the abbreviated plan. This authorization is made with the stipulation and understanding that the approved estimate may contain entries for items or activities that may be cited and found to be ineligible for federal participation during the project audit. Reimbursement of eligible actual cost is limited to $249,560.80. This cost shall be split 50/50 and invoiced as follows.

- ORDC= $124,780.40
- Wheeling= $124,780.40

Additional costs must be approved in writing by the Ohio Rail Development Commission (ORDC) prior to being incurred. Emergency verbal authorizations by ORDC may be permitted and will be confirmed by ORDC in writing within ten (10) business days of the verbal approval.

This authorization is contingent upon WLE accepting the following instructions:

1. WLE's project foreman will furnish written notification five (5) working days prior to the date work will start at the project site to James Tucker, ORDC, email James.tucker@dot.ohio.gov and to the Public Utilities Commission of Ohio at Jill.henry@puco.ohio.gov. WLE's project foreman will also notify the same of any stops and re-starts of the work activity and of the date work was completed for the project.

2. WLE will arrange for utilities to be located at the project site by the Ohio Utilities Protection Service (OUPS) prior to any construction activities at the site. Utilities that are not participating

members of the service must be contacted directly by WLE. **If it is known that there are utilities that need to be relocated, WLE needs to start that coordination work as soon as possible to avoid project delays.**

3. WLE's project foremen will notify James Tucker at James.tucker@dot.ohio.gov (email) of any changes in the scope of work, cost overruns, material changes, etc. which are not included in the approved plan and estimate and secure approval of same before the work is performed.

4. Open cut of roadways is not permitted except in unusual circumstances and must be coordinated with the local highway authority and preapproved by ORDC.

5. WLE shall send copies of each partial bill to ORDC.Invoice@dot.ohio.gov. Please find the enclosed ODOT Purchase Order to reference when billing.

6. WLE will furnish two (2) copies of the final all-inclusive bill to ORDC stating the exact dates of starting and completing work, the initial and final dates of construction and location where the accounts may be audited.

7. This installation will include any ancillary work to make the warning devices function as designed and meet MUTCD.

Thank you for your assistance with these matters.

Sincerely,

James Tucker
Project Manager

C: John Williams, Director, Transportation Department, PUCO
Jill Henry, Rail Division Chief, PUCO
Heather Hamilton, ORDC
ORDC (file)

WHEELING & LAKE ERIE RAILWAY COMPANY

Tim Andrews
Signal & Communication Supervisor
Tel. 330-767-7255
tandrews@wlerwy.com
100 East First Street
Brewster, OH 44613
Fax: 330-767-3213

December 20, 2021

Ohio Rail Development Commission
Mr. Jim Tucker
1980 West Broad St
Mail Stop #3140
Columbus, OH 43223

Estimate for Railroad Crossing Warning System at SR162 - DOT: 002-038-D

Dear Mr. Tucker,

I am providing this estimate for the crossing package and installation at SR 162. The material package and installation of the project will be completed under our continuing agreement with RioTech. Copies of the material and installation cost is attached.

Engineering Services/Labor/Material, RioTech (breakout attached)	$193,621.76
Preliminary Installation Services, Crosier (breakout attached)	$33,539.03
Electric Service, Emery	$2,500.00
Electric Utility fees	$7,500.00
WLE Direct Signal Labor	$5,500.00
Galvanized signal foundations	$3,400.00
Stone for fill	$3,500.00
TOTAL	$249,560.79

Please contact me if additional details are required.

Respectfully,

Tim Andrews

Notes
1: Direct purchase from Fabricated Metals, 60' galvanized gate foundation, $1700.00 ea.

DWG. NO.	DESCRIPTION
00	INDEX
01	SITE LAYOUT
02	CROSSING SIGNAL ALIGNMENT
03	SITE LAYOUT NOTES
04	XP4/VIO CIRCUITS
05	XP4 SETUP SHEET
06	TRACK CONNECTION CIRCUITS
07	ENTRANCE GATE CONTROL CIRCUIT
08	RECORDER
09	DTMF UNIT
10	ARRESTOR PANEL
11	CABLE TERMINATION PANEL
12	GATE #1 MECHANISM (NEAR SIDE)
13	GATE #1 LIGHTS (NEAR SIDE)
14	GATE #2 MECHANISM (FAR SIDE)
15	GATE #2 LIGHTS (FAR SIDE)
16	BATTERY CHARGERS
17	AC POWER DISTRIBUTION
18	RACK FRONT VIEW
19	RACK BACK VIEW
20	SIDE "A"
21	SIDE "C"

REV.	GENERAL NOTES

THE OPERATION OF THE CIRCUITS AND EQUIPMENT REPRESENTED HEREIN CANNOT BE FULLY CHECKED UNTIL ALL CIRCUITS AND DEVICES ARE CONNECTED TO FORM A COMPLETE SYSTEM, OR AN EFFECTIVE SUBSYSTEM. SUCH SYSTEM OR SUBSYSTEM MUST BE GIVEN COMPLETE CIRCUIT AND OPERATIONAL TESTS BEFORE BEING PLACED IN REGULAR OPERATION.

PRELIMINARY

CHANGE FROM TYPICAL: N

REVISION BLOCK

RIO GRANDE PACIFIC TECHNOLOGY
9601 CAMP BOWIE W BLVD
FORT WORTH, TX 76116
(817) 886-8210
WWW.RIOTECHNOLOGY.COM

Wheeling & Lake Erie Railway

LOCATION
SR 162
near SPENCER, OH
41.1001686,-82.1714440

ORIGINAL DATE	02/08/2018	TITLE	INDEX		
DESIGNER	RGPT	SUB	CAREY	CTC NO.	CN21070
DRAFTSMAN	RGPT	RRMP	N – 121.22	SCALE	N.T.S.
CHECKER	RGPT	DOT NO.	002 038D	SHEET	00 OF 21

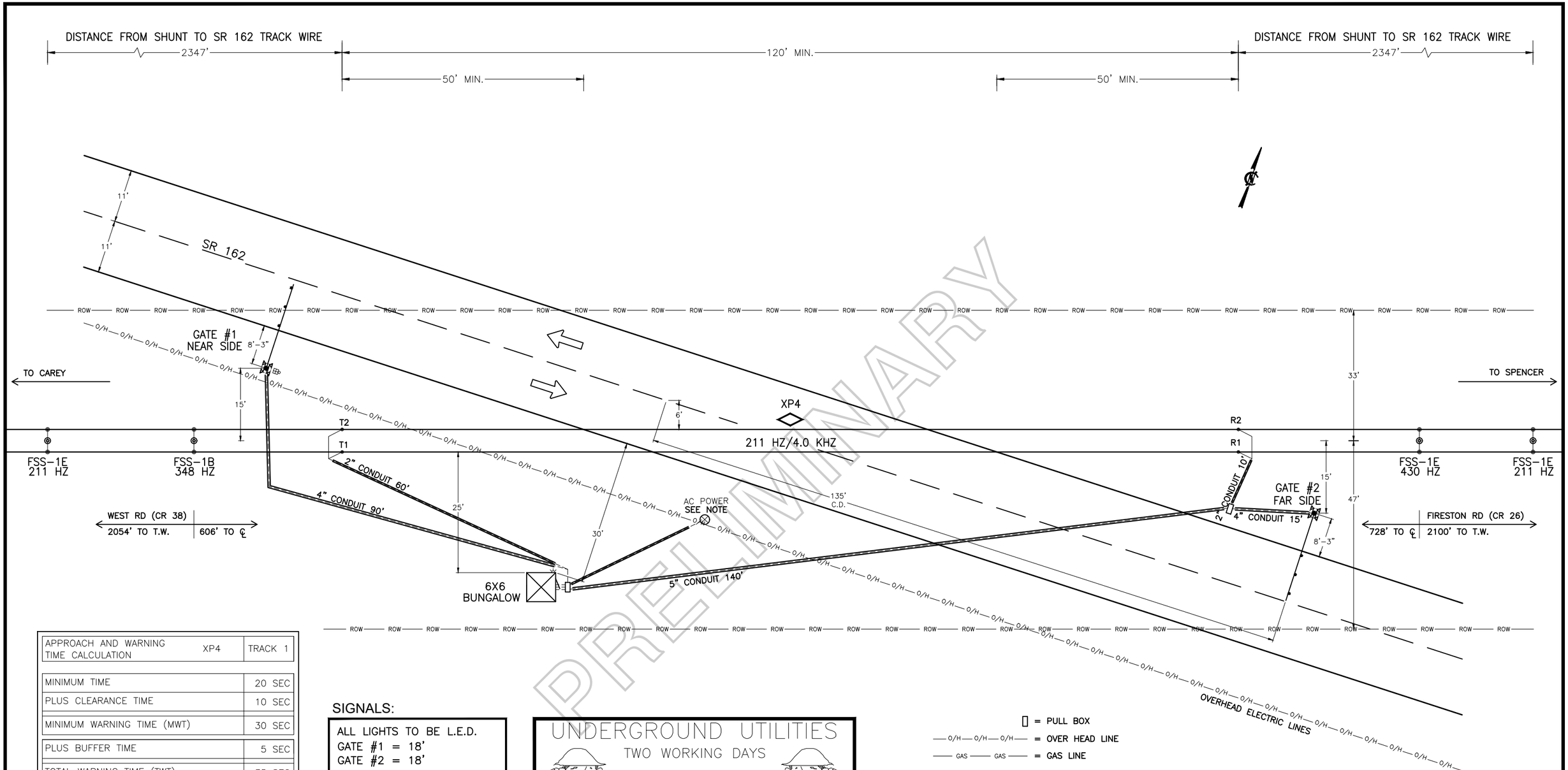

APPROACH AND WARNING TIME CALCULATION	XP4	TRACK 1
MINIMUM TIME		20 SEC
PLUS CLEARANCE TIME		10 SEC
MINIMUM WARNING TIME (MWT)		30 SEC
PLUS BUFFER TIME		5 SEC
TOTAL WARNING TIME (TWT)		35 SEC
PLUS EQUIPMENT RESPONSE TIME		5 SEC
PLUS ADVANCE PRE-EMPTION TIME		N/A SEC
TOTAL APPROACH TIME (TAT)		40 SEC
MAXIMUM TRAIN SPEED		40 MPH
TIMES RATIO OF FT/SEC TO MPH		1.4667
TOTAL (MINIMUM) APPROACH DISTANCE		2,347 FT

SIGNALS:

ALL LIGHTS TO BE L.E.D.
GATE #1 = 18'
GATE #2 = 18'

UNDERGROUND UTILITIES
TWO WORKING DAYS
BEFORE YOU DIG
CALL 1-800-362-2761 (TOLL FREE)
OHIO UTILITIES PROTECTION SERVICE
NON-MEMBERS
MUST BE CALLED DIRECTLY

[ ] = PULL BOX
—O/H—O/H—O/H— = OVER HEAD LINE
—GAS—GAS— = GAS LINE

PRELIMINARY

REVISION BLOCK

RIO GRANDE PACIFIC TECHNOLOGY
9601 CAMP BOWIE W BLVD
FORT WORTH, TX 76116
(817) 886-8210
WWW.RIOTECHNOLOGY.COM

Wheeling & Lake Erie Railway

LOCATION
SR 162
near SPENCER, OH
41.1001686,-82.1714440

ORIGINAL DATE	02/08/2018	TITLE	SITE LAYOUT		
DESIGNER	RGPT	SUB	CAREY	CTC NO.	CN21070
DRAFTSMAN	RGPT	RRMP	N - 121.22	SCALE	1"=20'
CHECKER	RGPT	DOT NO.	002 038D	SHEET	01 OF 21

CONSTRUCTION NOTES

1.) INSTALL NEW 6' X 6' BUNGALOW IN SOUTHWEST QUADRANT.

2.) INSTALL (2) NEW FLASHING LIGHTS WITH GATES.

3.) REUSE EXISTING METER POLE.

4.) BUNGALOW AND SIGNAL LOCATIONS SHOWN ON THE PLAN ARE SUBJECT TO CHANGE WITHIN RAILROAD RIGHT-OF-WAY IF UNDERGROUND OBSTRUCTIONS PREVENT THE INSTALLATION OF THE BUNGALOW/SIGNALS IN THE LOCATION SHOWN.

PRELIMINARY

REVISION BLOCK

RIO GRANDE PACIFIC
TECHNOLOGY
9601 CAMP BOWIE W BLVD
FORT WORTH, TX 76116
(817) 886-8210
WWW.RIOTECHNOLOGY.COM

Wheeling & Lake Erie Railway

LOCATION
SR 162
near SPENCER, OH
41.1001686,-82.1714440

ORIGINAL DATE	02/08/2018	TITLE	CONSTRUCTION NOTES		
DESIGNER	RGPT	SUB	CAREY	CTC NO.	CN21070
DRAFTSMAN	RGPT	RRMP	N - 121.22	SCALE	N.T.S.
CHECKER	RGPT	DOT NO.	002 038D	SHEET	01A OF 21

CROSSING SIGNAL ALIGNMENT

LEGEND	
Ⓐ	GATE #1 FRONT MAST LIGHTS
Ⓑ	GATE #1 BACK MAST LIGHTS
Ⓒ	GATE #2 FRONT MAST LIGHTS
Ⓓ	GATE #2 BACK MAST LIGHTS

ALIGNMENT

FRONT LIGHTS
ADJUST LIGHT UNIT VERTICALLY TO ALIGN AXIS OF BEAM 5FT. 6IN. ABOVE PAVEMENT AT SELECTED ALIGNMENT DISTANCE. BOTH LAMPS SHOULD BE ALIGNED TO SAME POINT.

ADJUST LIGHT UNIT HORIZONTALLY TO ALIGN AXIS OF BEAM TO CENTER OF APPROACH LANE IN APPROACH TO SIGNAL AT SELECTED ALIGNMENT DISTANCE, MAINTAINING VERTICAL ALIGNMENT. BOTH LAMPS SHOULD BE ALIGNED TO SAME POINT.

BACK LIGHTS
ADJUST LIGHT UNIT VERTICALLY TO ALIGN AXIS OF BEAM 5 FT. 6 IN. ABOVE PAVEMENT AT A POINT 50 FT. IN APPROACH TO THE SIGNAL ON OPPOSITE SIDE OF TRACK.

ADJUST LIGHT UNIT HORIZONTALLY TO ALIGN AXIS OF BEAM TO A POINT 50 FT. IN APPROACH TO THE SIGNAL ON OPPOSITE SIDE OF TRACK AND IN CENTER OF APPROACH TRAVEL WAY.

REVISION BLOCK

RIO GRANDE PACIFIC TECHNOLOGY
9601 CAMP BOWIE W BLVD
FORT WORTH, TX 76116
(817) 886-8210
WWW.RIOTECHNOLOGY.COM

Wheeling & Lake Erie Railway

LOCATION
SR 162
near SPENCER, OH
41.1001686,-82.1714440

ORIGINAL DATE	02/08/2018	TITLE	CROSSING SIGNAL ALIGNMENT		
DESIGNER	RGPT	SUB	CAREY	CTC NO.	CN21070
DRAFTSMAN	RGPT	RRMP	N – 121.22	SCALE	N.T.S.
CHECKER	RGPT	DOT NO.	002 038D	SHEET	02 OF 21

SITE LAYOUT NOTES

1.) CROSSING IS LOCATED: LATITUDE 41.1001686
LONGITUDE −82.1714440

GATE #1

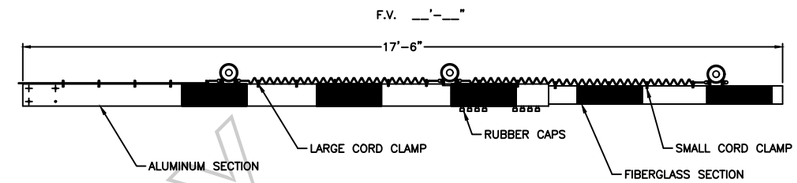

GATE #2

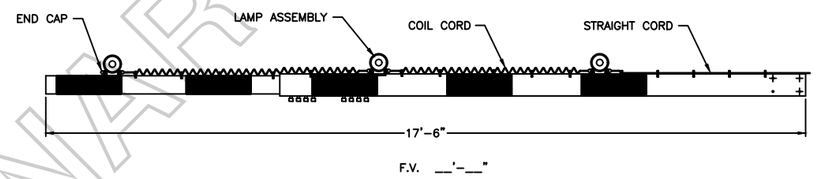

ELECTRONIC CROSSING BELL
GSI MODEL EB-3-360-5

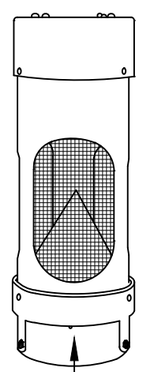

THIS SIDE FACING ROADWAY

PRELIMINARY

CHANGE FROM TYPICAL: N

REVISION BLOCK

RIO GRANDE PACIFIC TECHNOLOGY
9601 CAMP BOWIE W BLVD
FORT WORTH, TX 76116
(817) 886-8210
WWW.RIOTECHNOLOGY.COM

Wheeling & Lake Erie Railway

LOCATION
SR 162
near SPENCER, OH
41.1001686,-82.1714440

ORIGINAL DATE 02/08/2018	TITLE SITE LAYOUT NOTES		
DESIGNER RGPT	SUB CAREY	CTC NO. CN21070	
DRAFTSMAN RGPT	RRMP N – 121.22	SCALE N.T.S.	
CHECKER RGPT	DOT NO. 002 038D	SHEET 03 OF 21	

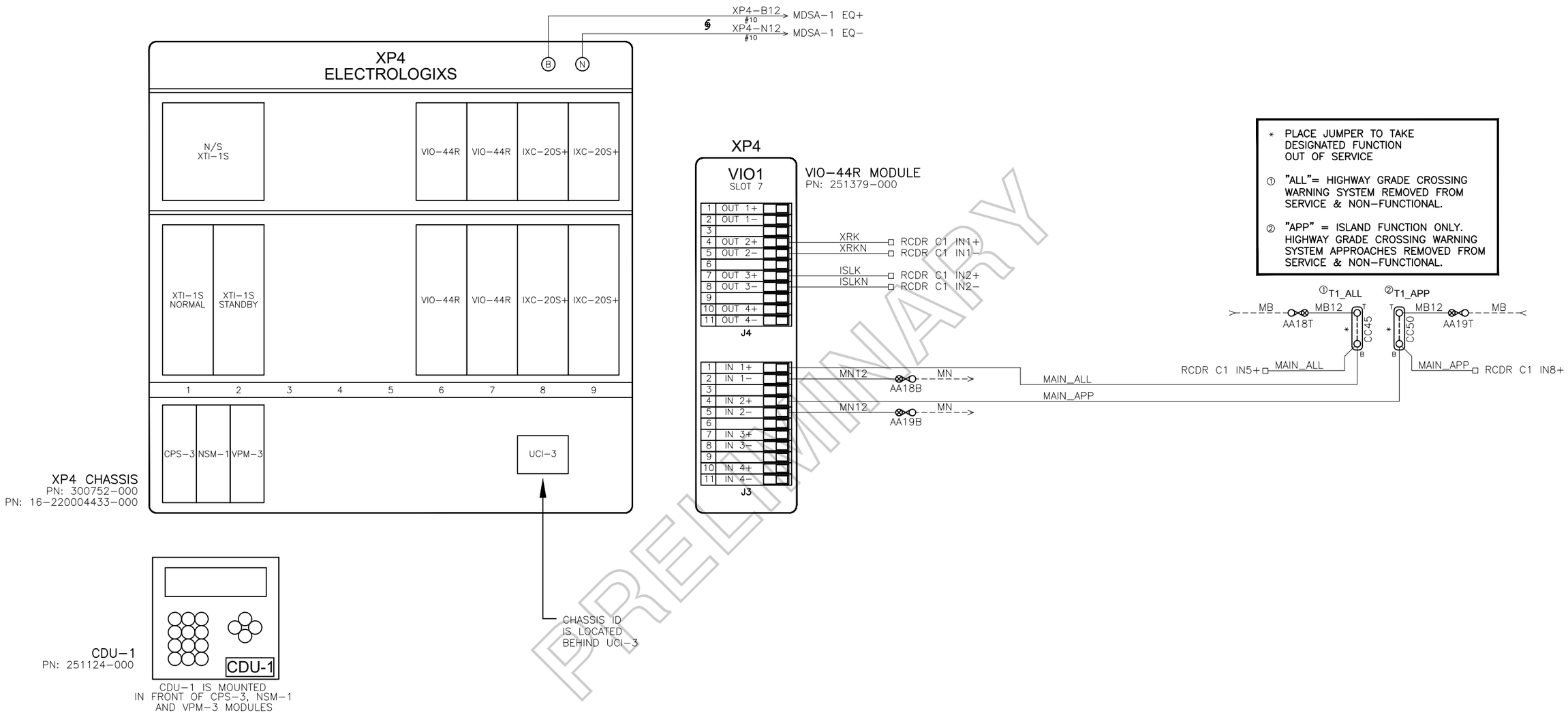

PRELIMINARY

NOTE: ALL WIRING THIS SHEET #16 AWG UNLESS NOTED OTHERWISE.

CHANGE FROM TYPICAL: N

REVISION BLOCK

RIO GRANDE PACIFIC TECHNOLOGY
9601 CAMP BOWIE W BLVD
FORT WORTH, TX 76116
(817) 886-8210
WWW.RIOTECHNOLOGY.COM

Wheeling & Lake Erie Railway

LOCATION
SR 162
near SPENCER, OH
41.1001686,-82.1714440

ORIGINAL DATE	02/08/2018	TITLE	XP4/VIO CIRCUITS		
DESIGNER	RGPT	SUB	CAREY	CTC NO.	CN21070
DRAFTSMAN	RGPT	RRMP	N – 121.22	SCALE	N.T.S.
CHECKER	RGPT	DOT NO.	002 038D	SHEET	04 OF 21

ADJUSTMENT NAME		MDR1				MDR2			
NAME		HIGHWAY CROSSING				HIGHWAY CROSSING			
WARNING TIME		35 SEC				25 SEC			
CW/MD		CW				CW			
AP TIME		00 SEC				00 SEC			
CWE–WT		00 SEC				00 SEC			
AUX RECOVERY DELAY		05 SEC				05 SEC			
		TK1	TK2	TK3	TK4	TK1	TK2	TK3	TK4
TRACK ASSIGNED		ASSIGN				ASSIGN			
OFFSET DISTANCE		0 FT				0 FT			
MD RESTART		*				*			
SUDDEN SHUNT ZONE		*				*			
POSITIVE START	PSEN	DISABLE				DISABLE			
	PSRX	NA				NA			
	PST	NA				NA			
POST JOINT DETECT	PJEN	DISABLE				DISABLE			
	PJRX	NA				NA			
	PJDT	NA				NA			

APPLICATION SOFTWARE INFORMATION	
NAME	*
REV.	1
CHECKSUM	*
CRC	*
CHASSIS ID	*
LOCATED BEHIND UCI–3	CHASSIS ID

◑ = TAB INTACT
● = TAB PUNCHED OUT

EXECUTIVE INFORMATION		
VPM–3	VERSION	PART NUMBER
CROSSING SOFTWARE	*	083024–726

BASIC TRACK SETUP				
	TK1	TK2	TK3	TK4
FREQUENCY	211 HZ			
MASTER/SLAVE	MASTER			
RX ADJUST	100			
TCA	*			
DIRECTION MODE	BI			
LIA	*			
ADVANCED APR. CAL	INACTIVE			
NBS COMP RX	*			
TRK ISLAND ASSIGN	ISL1			
APPROACH LENGTH	2347 FT			
AUTO RX	ENABLE			

IXC SETUP				
CROSSING TEST MODE	OFF			
FLASH RATE	55FPM			
	IXC–1	IXC–2	IXC–3	IXC–4
VOLTAGE REGULATION	ON			
L1 VOLTAGE	* 10.0			
L2 VOLTAGE	* 10.0			
GATE 1 DELAY	3 SEC			
GATE 2 DELAY	3 SEC			

ADVANCED TRACK SETUP					
		TK1	TK2	TK3	TK4
MOTION DET TIMER	MDEN	DISABLE			
	MDTT	10 MIN			
FALSE SHUNT	FSEN	DISABLE			
	FSRX	NA			
	FST	NA			
APPROACH RELEASE	AREN	DISABLE			
	ARRX	NA			
	ART	NA			
LOS TIME		16 SEC			
IJ–LOS TIME		5 SEC			
NRML_SHHTR_VRSHRT		NRML *			

ISLAND SETUP				
	TK1	TK2	TK3	TK4
ENABLE/DISABLE	ENABLE			
FREQUENCY	4.0 KHZ			
LOSS OF SHUNT	4 SEC			
FAULT DELAY	1			

SHUNT RECORDS

APPROACH 1 (EAST)		NO SHUNT		100% SHUNT		50% SHUNT			LIA ADDED
		RX	PHASE	RX	PHASE		RX	PHASE	± 1 to ±9
Track 1	Normal								
	Standby								
Track 2	Normal								
	Standby								
APPROACH 2 (WEST)									
Track 1	Normal								
	Standby								
Track 2	Normal								
	Standby								

INITIAL VALUES WHEN PLACED IN SERVICE

PRELIMINARY

NOTES:
* = FIELD ADJUSTMENT
NA = NOT APPLICABLE

CHANGE FROM TYPICAL: Y

REVISION BLOCK

RIO GRANDE PACIFIC TECHNOLOGY
9601 CAMP BOWIE W BLVD
FORT WORTH, TX 76116
(817) 886–8210
WWW.RIOTECHNOLOGY.COM

Wheeling & Lake Erie Railway

LOCATION
SR 162
near SPENCER, OH
41.1001686,–82.1714440

ORIGINAL DATE	02/08/2018	TITLE	XP4 SETUP SHEET		
DESIGNER	RGPT	SUB	CAREY	CTC NO.	CN21070
DRAFTSMAN	RGPT	RRMP	N – 121.22	SCALE	N.T.S.
CHECKER	RGPT	DOT NO.	002 038D	SHEET	05 OF 21

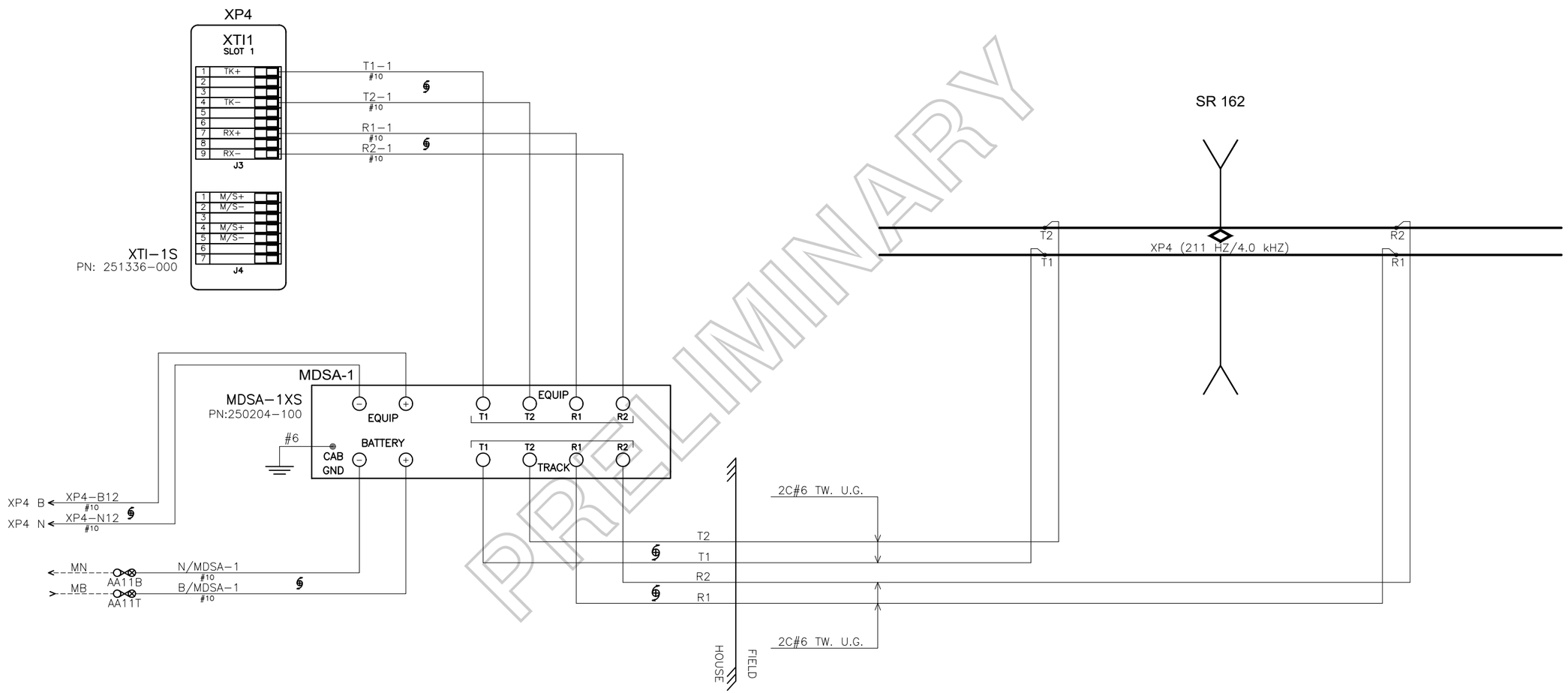

PRELIMINARY

CHANGE FROM TYPICAL: Y

REVISION BLOCK

RIO GRANDE PACIFIC TECHNOLOGY

9601 CAMP BOWIE W BLVD
FORT WORTH, TX 76116
(817) 886−8210
WWW.RIOTECHNOLOGY.COM

Wheeling & Lake Erie Railway

LOCATION
SR 162
near SPENCER, OH
41.1001686,−82.1714440

ORIGINAL DATE 02/08/2018	TITLE TRACK CONNECTION CIRCUITS		
DESIGNER RGPT	SUB CAREY	CTC NO. CN21070	
DRAFTSMAN RGPT	RRMP N − 121.22	SCALE N.T.S.	
CHECKER RGPT	DOT NO. 002 038D	SHEET 06 OF 21	

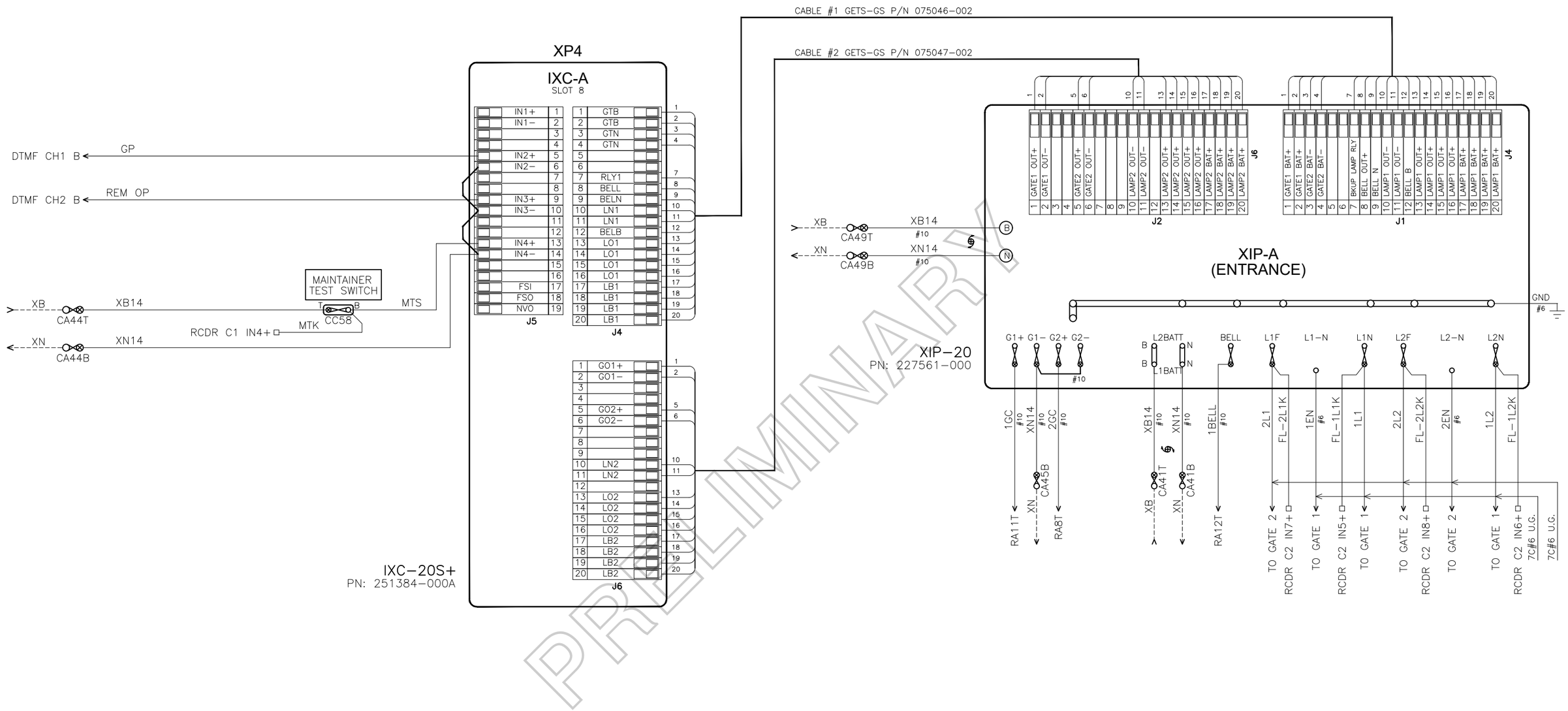

PRELIMINARY

NOTES: ALL WIRING THIS SHEET #16 AWG
UNLESS NOTED OTHERWISE.

CHANGE FROM TYPICAL: N

REVISION BLOCK

RIO GRANDE PACIFIC TECHNOLOGY
9601 CAMP BOWIE W BLVD
FORT WORTH, TX 76116
(817) 886-8210
WWW.RIOTECHNOLOGY.COM

Wheeling & Lake Erie Railway

LOCATION
SR 162
near SPENCER, OH
41.1001686,-82.1714440

ORIGINAL DATE 02/08/2018	TITLE ENTRANCE GATE CONTROL CIRCUIT		
DESIGNER RGPT	SUB CAREY	CTC NO. CN21070	
DRAFTSMAN RGPT	RRMP N − 121.22	SCALE N.T.S.	
CHECKER RGPT	DOT NO. 002 038D	SHEET 07 OF 21	

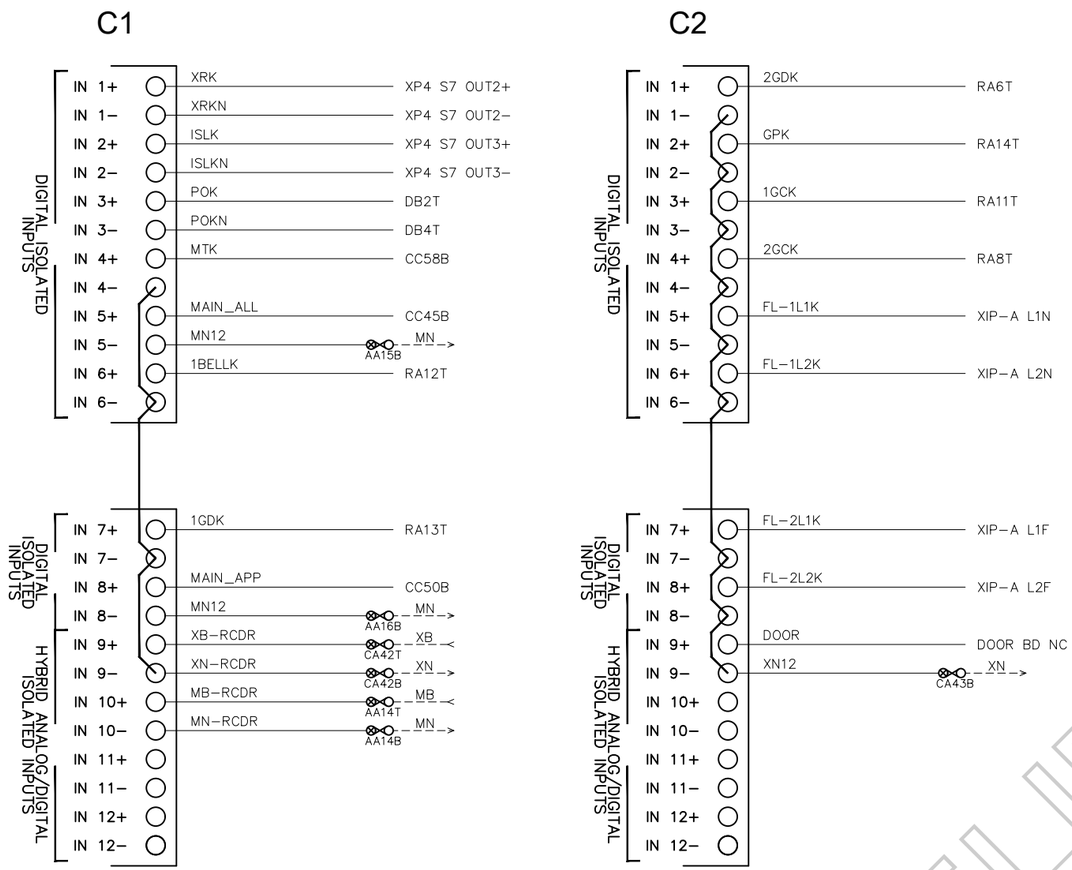

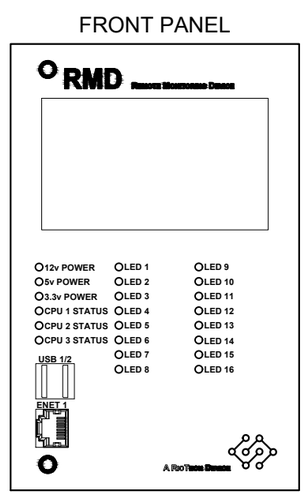

PN: RMD−IIXX

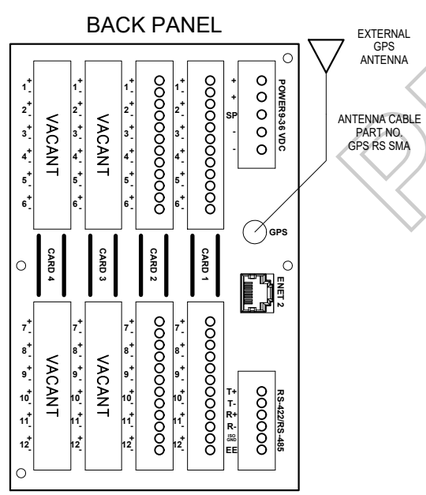

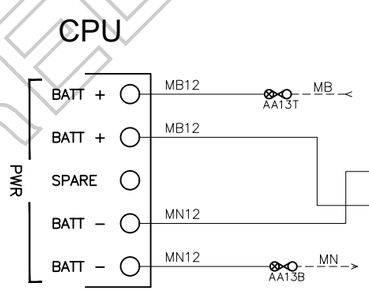

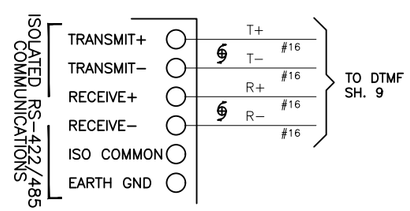

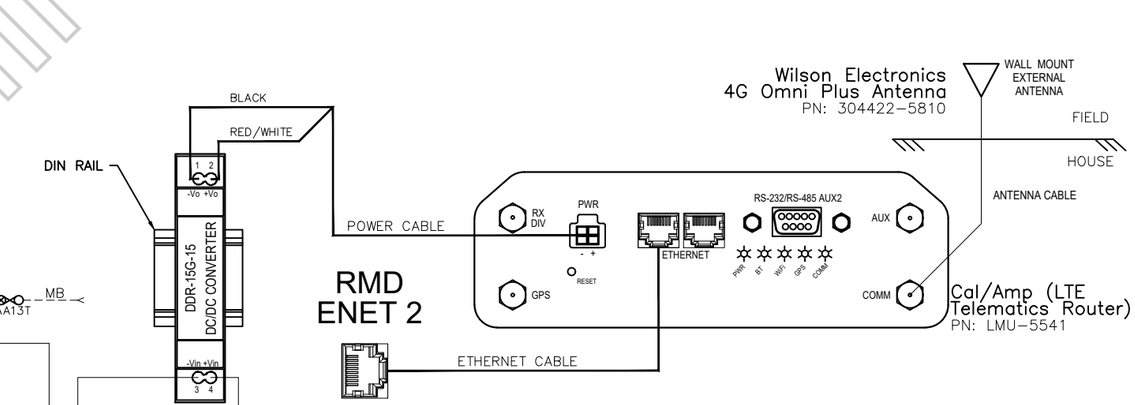

PRELIMINARY

CHANGE FROM TYPICAL: N

REVISION BLOCK

RIO GRANDE PACIFIC TECHNOLOGY
9601 CAMP BOWIE W BLVD
FORT WORTH, TX 76116
(817) 886-8210
WWW.RIOTECHNOLOGY.COM

Wheeling & Lake Erie Railway

LOCATION: SR 162 near SPENCER, OH
41.1001686,−82.1714440

ORIGINAL DATE	02/08/2018	TITLE	RECORDER		
DESIGNER	RGPT	SUB	CAREY	CTC NO.	CN21070
DRAFTSMAN	RGPT	RRMP	N − 121.22	SCALE	N.T.S.
CHECKER	RGPT	DOT NO.	002 038D	SHEET	08 OF 21

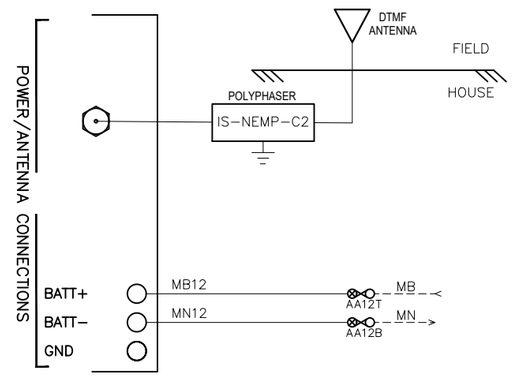

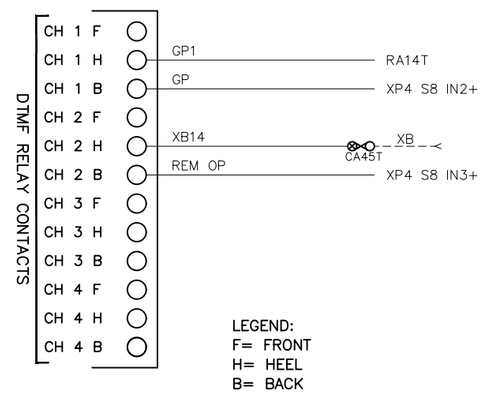

LEGEND:
F= FRONT
H= HEEL
B= BACK

FRONT PANEL

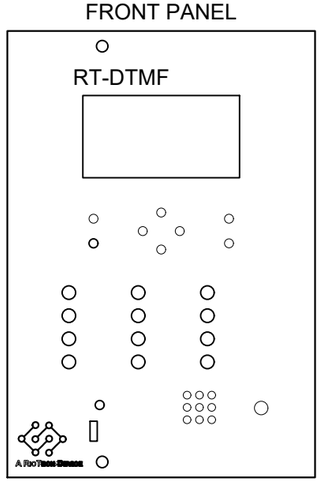

BACK PANEL

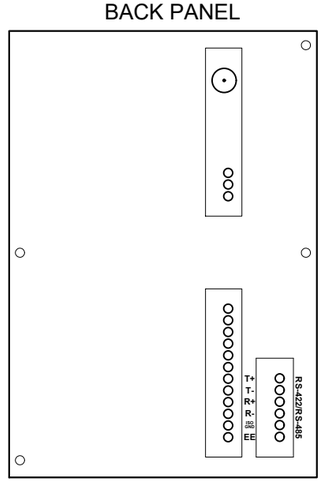

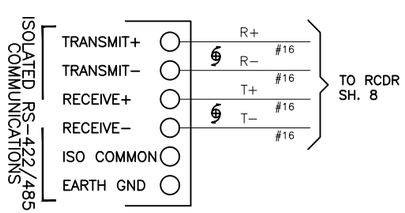

CHANGE FROM TYPICAL: N

DTMF CONTROLS				
	CHANNEL 1	CHANNEL 2	CHANNEL 3	CHANNEL 4
ACTIVATION CODE	0381#	038#		
DEACTIVATION CODE	0381*	038*		
DTMF RECEIVE DEBOUNCE TIME	25 MS			
RECIEVE TIMEOUT	5000 MS			

CHANNEL SETTINGS				
	CHANNEL 1	CHANNEL 2	CHANNEL 3	CHANNEL 4
CHANNEL TIMEOUT	2 min	2 min		
CHANNEL INVERT	NO	NO	NO	NO

PLAYBACK SETTINGS				
	CHANNEL 1	CHANNEL 2	CHANNEL 3	CHANNEL 4
ACTIVATION RESPONSE	CHANNEL 1 ACTIVE	CHANNEL 2 ACTIVE	CHANNEL 3 ACTIVE	CHANNEL 4 ACTIVE
DEACTIVATION RESPONSE	CHANNEL 1 INACTIVE	CHANNEL 2 INACTIVE	CHANNEL 3 INACTIVE	CHANNEL 4 INACTIVE
TIMEOUT RESPONSE	CHANNEL 1 TIMEOUT	CHANNEL 2 TIMEOUT	CHANNEL 3 TIMEOUT	CHANNEL 4 TIMEOUT
AUDIO RESPONSE TIME	500 MS			
FORCE AUDIO RESPONSE TIME	1000 MS			

RADIO SETTINGS	
FREQUENCY	161.250 MHz
TX POWER	6
SQUELCH ON	-74.3
SQUELCH OFF	-74.3
AAR CHANNEL	76

PRELIMINARY

RIO GRANDE PACIFIC TECHNOLOGY
9601 CAMP BOWIE W BLVD
FORT WORTH, TX 76116
(817) 886-8210
WWW.RIOTECHNOLOGY.COM

Wheeling & Lake Erie Railway

LOCATION
SR 162
near SPENCER, OH
41.1001686,-82.1714440

ORIGINAL DATE	02/08/2018	TITLE	DTMF UNIT		
DESIGNER	RGPT	SUB	CAREY	CTC NO.	CN21070
DRAFTSMAN	RGPT	RRMP	N - 121.22	SCALE	N.T.S.
CHECKER	RGPT	DOT NO.	002 038D	SHEET	09 OF 21

REVISION BLOCK

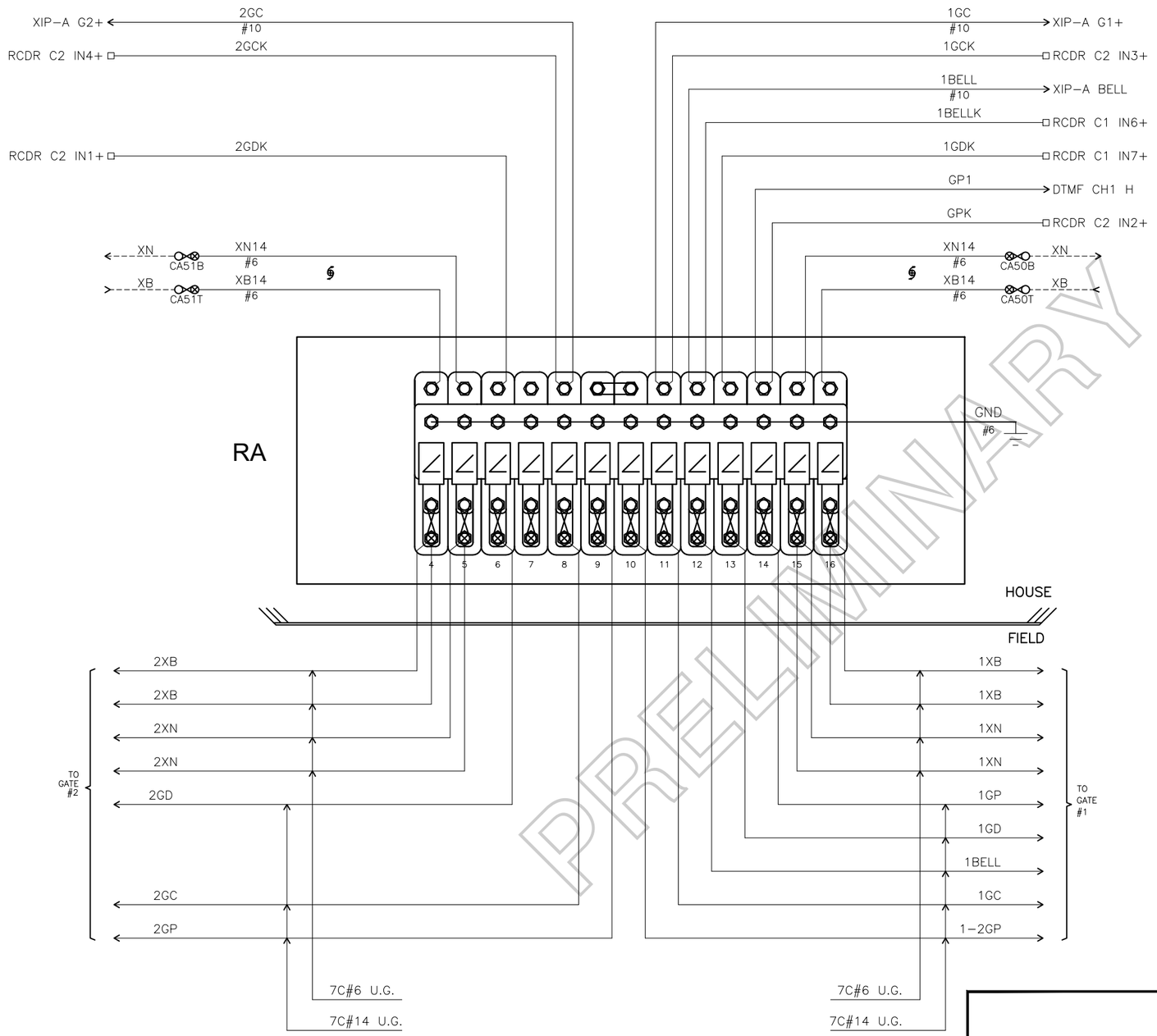

PRELIMINARY

NOTES: ALL WIRING THIS SHEET #16 AWG
UNLESS NOTED OTHERWISE.

CHANGE FROM TYPICAL: N

REVISION BLOCK

RIO GRANDE PACIFIC TECHNOLOGY
9601 CAMP BOWIE W BLVD
FORT WORTH, TX 76116
(817) 886-8210
WWW.RIOTECHNOLOGY.COM

Wheeling & Lake Erie Railway

LOCATION
SR 162
near SPENCER, OH
41.1001686,-82.1714440

ORIGINAL DATE 02/08/2018	TITLE ARRESTOR PANEL		
DESIGNER RGPT	SUB CAREY	CTC NO. CN21070	
DRAFTSMAN RGPT	RRMP N - 121.22	SCALE N.T.S.	
CHECKER RGPT	DOT NO. 002 038D	SHEET 10 OF 21	

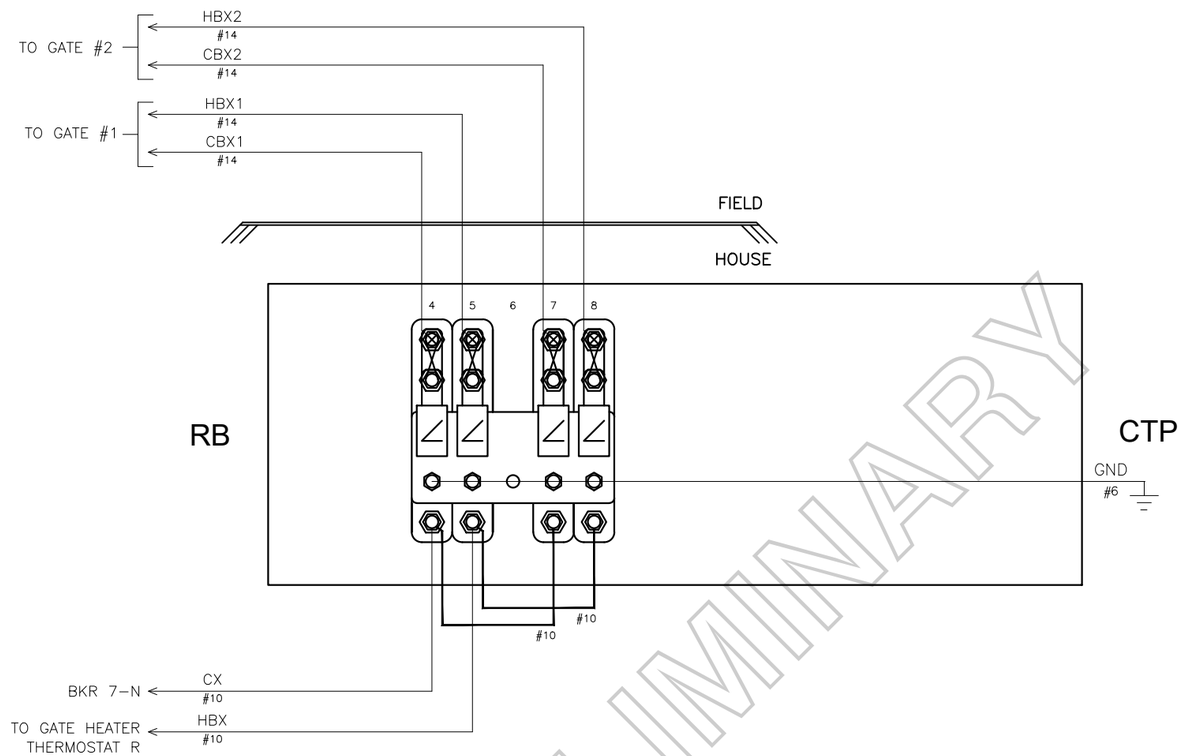

PRELIMINARY

LEGEND:

⬡ = INSULATED NUT

NOTES: ALL WIRING THIS SHEET #16 AWG
UNLESS NOTED OTHERWISE.

CHANGE FROM TYPICAL: N

REVISION BLOCK

RIO GRANDE PACIFIC TECHNOLOGY
9601 CAMP BOWIE W BLVD
FORT WORTH, TX 76116
(817) 886-8210
WWW.RIOTECHNOLOGY.COM

Wheeling & Lake Erie Railway

LOCATION
SR 162
near SPENCER, OH
41.1001686,-82.1714440

ORIGINAL DATE 02/08/2018	TITLE CABLE TERMINATION PANEL		
DESIGNER RGPT	SUB CAREY	CTC NO. CN21070	
DRAFTSMAN RGPT	RRMP N – 121.22	SCALE N.T.S.	
CHECKER RGPT	DOT NO. 002 038D	SHEET 11 OF 21	

CONTACT	CLOSED	FUNCTION	TENSION
1B	75–90 DEG.	POWER DOWN	18–28 OZ.
1F	0–70 DEG.	SNUB DOWN	18–28 OZ.
2	0–86 DEG.	POWER UP	18–28 OZ.
3	0–10 DEG.	GATE DOWN	16–24 OZ.
4	82–90 DEG.	GATE CLEAR	16–24 OZ.
5	10–90 DEG.	BELL	16–24 OZ.
6	SPARE	SPARE	16–24 OZ.
7	0–2 DEG.	SNUB	16–24 OZ.

LEGEND:

⬡ = INSULATED NUT

NOTES:

* BELL TO BE ELECTRONIC.

X = INTERNAL GATE WIRES THAT SHARE ELECTRICAL CONNECTIONS WITH OTHER WIRES THAT ARE ASSIGNED THE SAME NUMBER.

REFER TO SHEET 13 FOR GATE ARM LIGHT WIRING

ADD BOLD STRAPS AND JUMPERS AS SHOWN.

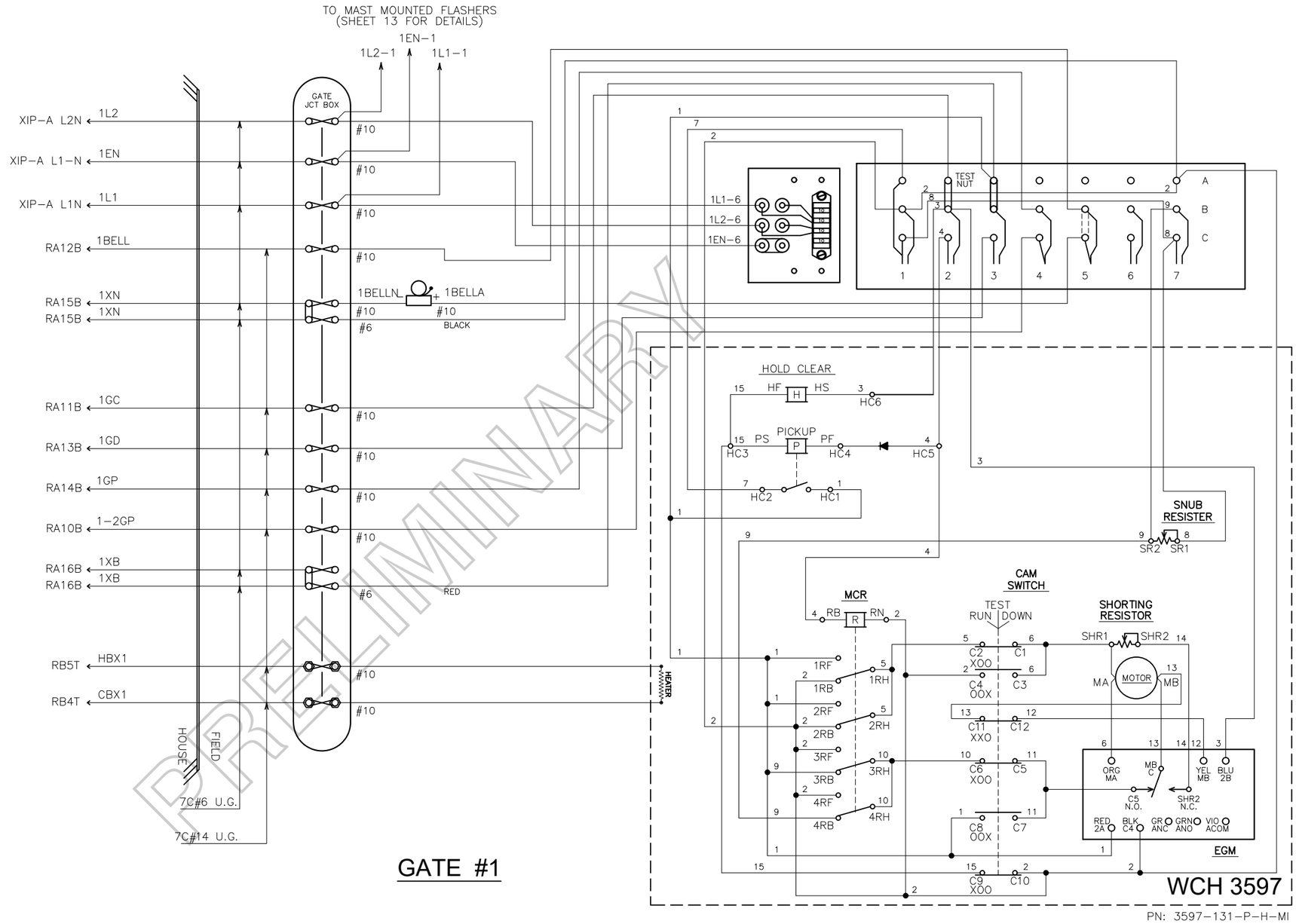

PRELIMINARY

GATE #1

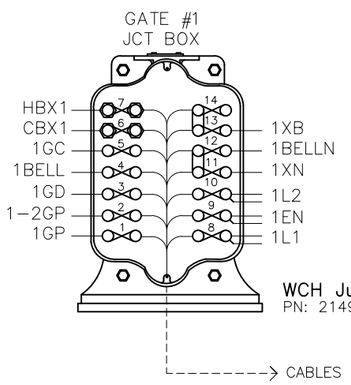

WCH Junction box base
PN: 2149–A–139

CHANGE FROM TYPICAL: N

REVISION BLOCK

RIO GRANDE PACIFIC TECHNOLOGY
9601 CAMP BOWIE W BLVD
FORT WORTH, TX 76116
(817) 886–8210
WWW.RIOTECHNOLOGY.COM

Wheeling & Lake Erie Railway

LOCATION
SR 162
near SPENCER, OH
41.1001686,–82.1714440

ORIGINAL DATE 02/08/2018	TITLE GATE #1 MECHANISM (NEAR SIDE)		
DESIGNER RGPT	SUB CAREY	CTC NO. CN21070	
DRAFTSMAN RGPT	RRMP N – 121.22	SCALE N.T.S.	
CHECKER RGPT	DOT NO. 002 038D	SHEET 12 OF 21	

GATE #1

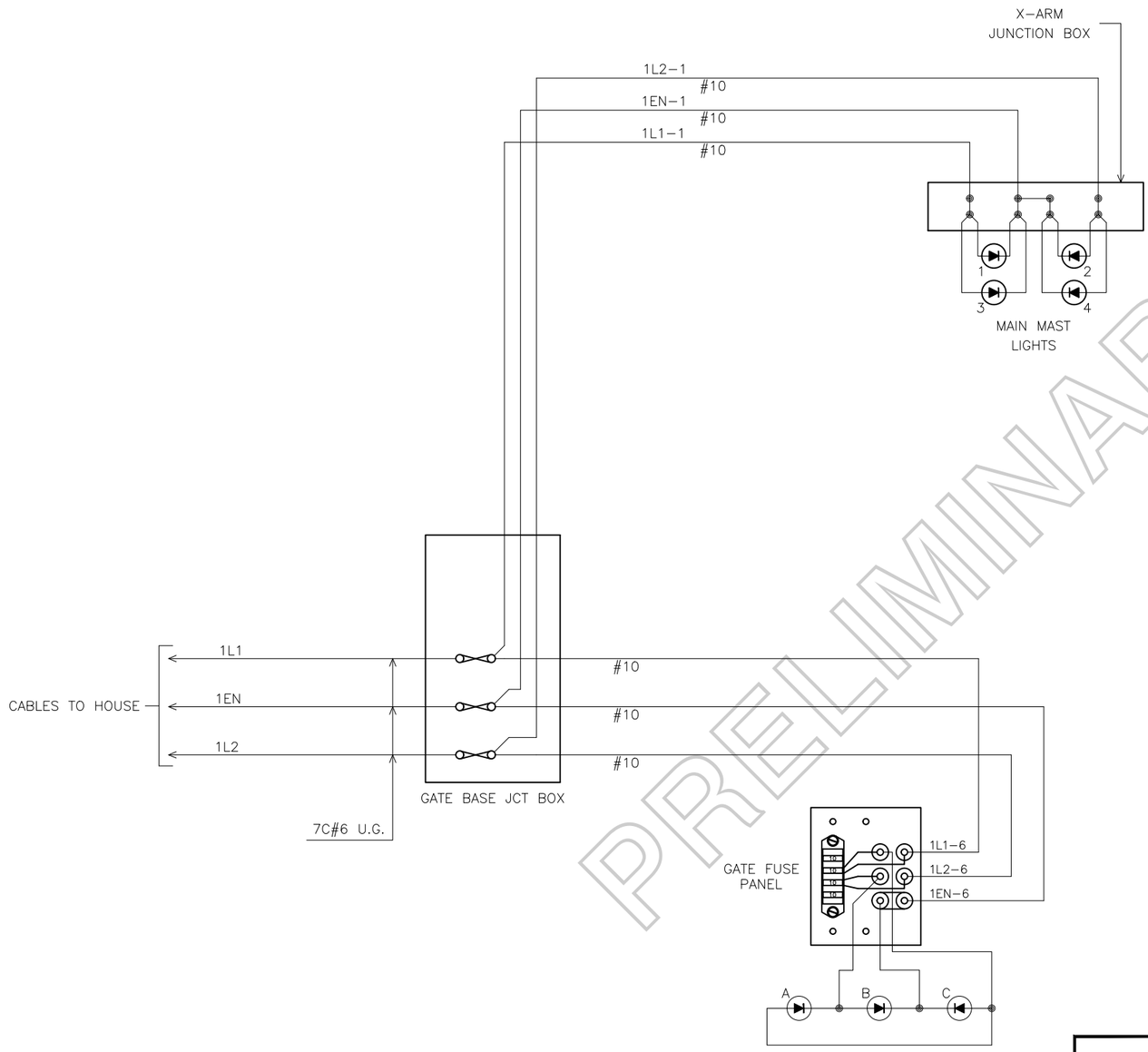

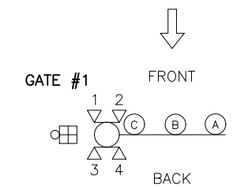

NOTE:

* USE ATC 10 AMP FUSES ONLY

(◀) IS LED SYMBOL ONLY. INSTALL ACCORDING TO MANUFACTURER'S INSTRUCTIONS.

PRELIMINARY

CHANGE FROM TYPICAL: Y

REVISION BLOCK

RIO GRANDE PACIFIC TECHNOLOGY
9601 CAMP BOWIE W BLVD
FORT WORTH, TX 76116
(817) 886–8210
WWW.RIOTECHNOLOGY.COM

Wheeling & Lake Erie Railway

LOCATION
SR 162
near SPENCER, OH
41.1001686,–82.1714440

ORIGINAL DATE 02/08/2018	TITLE GATE #1 LIGHTS (NEAR SIDE)		
DESIGNER RGPT	SUB CAREY	CTC NO. CN21070	
DRAFTSMAN RGPT	RRMP N – 121.22	SCALE N.T.S.	
CHECKER RGPT	DOT NO. 002 038D	SHEET 13 OF 21	

CONTACT	CLOSED	FUNCTION	TENSION
1B	75–90 DEG.	POWER DOWN	18–28 OZ.
1F	0–70 DEG.	SNUB DOWN	18–28 OZ.
2	0–86 DEG.	POWER UP	18–28 OZ.
3	0–10 DEG.	GATE DOWN	16–24 OZ.
4	82–90 DEG.	GATE CLEAR	16–24 OZ.
5	10–90 DEG.	BELL	16–24 OZ.
6	SPARE	SPARE	16–24 OZ.
7	0–2 DEG.	SNUB	16–24 OZ.

LEGEND:

⬡ = INSULATED NUT

NOTES:

* BELL TO BE ELECTRONIC.

X = INTERNAL GATE WIRES THAT SHARE ELECTRICAL CONNECTIONS WITH OTHER WIRES THAT ARE ASSIGNED THE SAME NUMBER.

REFER TO SHEET 15 FOR GATE ARM LIGHT WIRING

ADD BOLD STRAPS AND JUMPERS AS SHOWN.

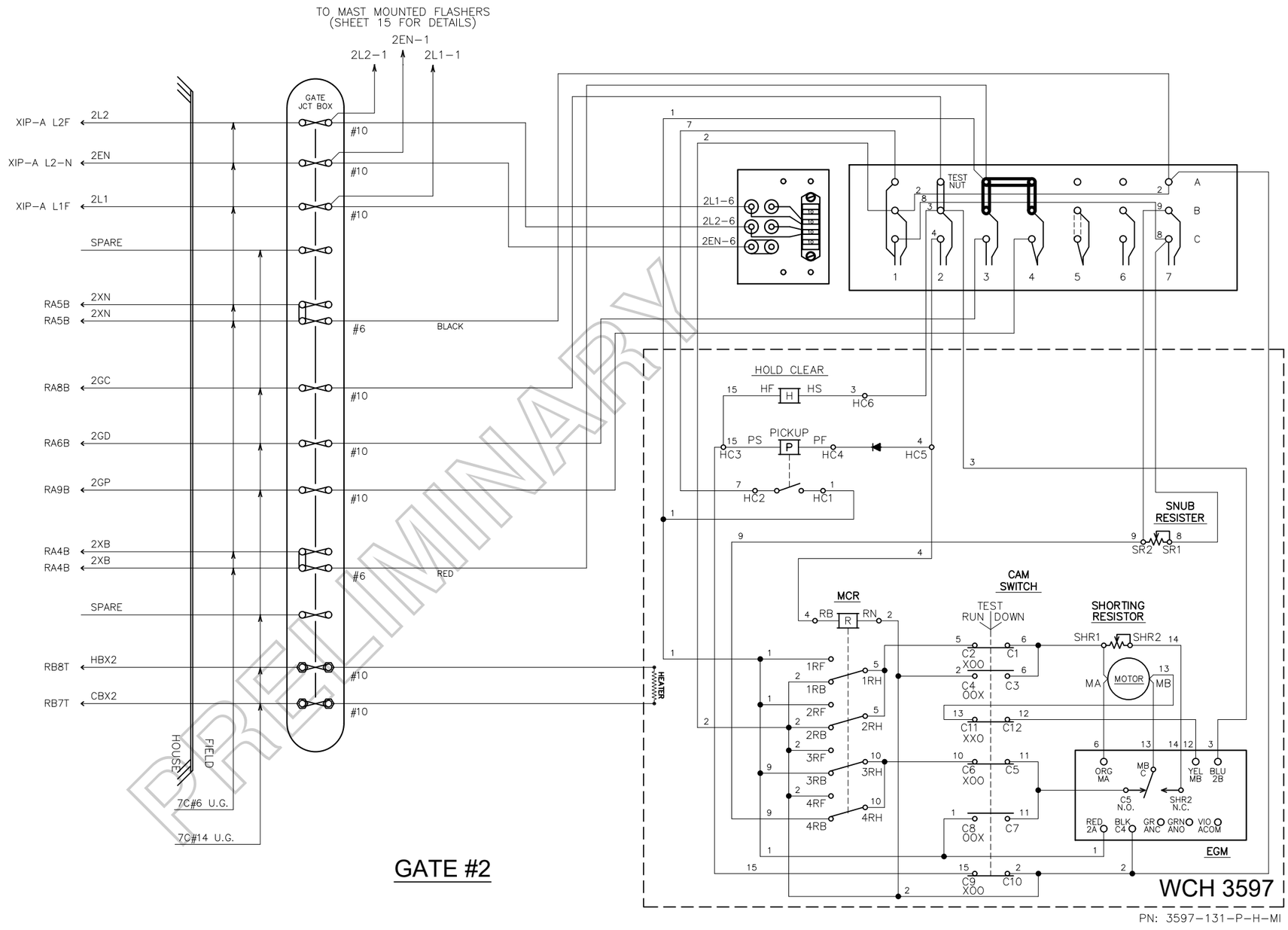

PRELIMINARY

GATE #2

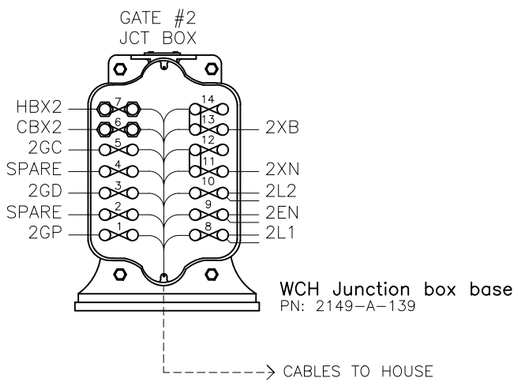

CHANGE FROM TYPICAL: Y

REVISION BLOCK

RIO GRANDE PACIFIC TECHNOLOGY
9601 CAMP BOWIE W BLVD
FORT WORTH, TX 76116
(817) 886–8210
WWW.RIOTECHNOLOGY.COM

Wheeling & Lake Erie Railway

LOCATION
SR 162
near SPENCER, OH
41.1001686,–82.1714440

ORIGINAL DATE 02/08/2018	TITLE GATE #2 MECHANISM (FAR SIDE)		
DESIGNER RGPT	SUB CAREY	CTC NO. CN21070	
DRAFTSMAN RGPT	RRMP N – 121.22	SCALE N.T.S.	
CHECKER RGPT	DOT NO. 002 038D	SHEET 14 OF 21	

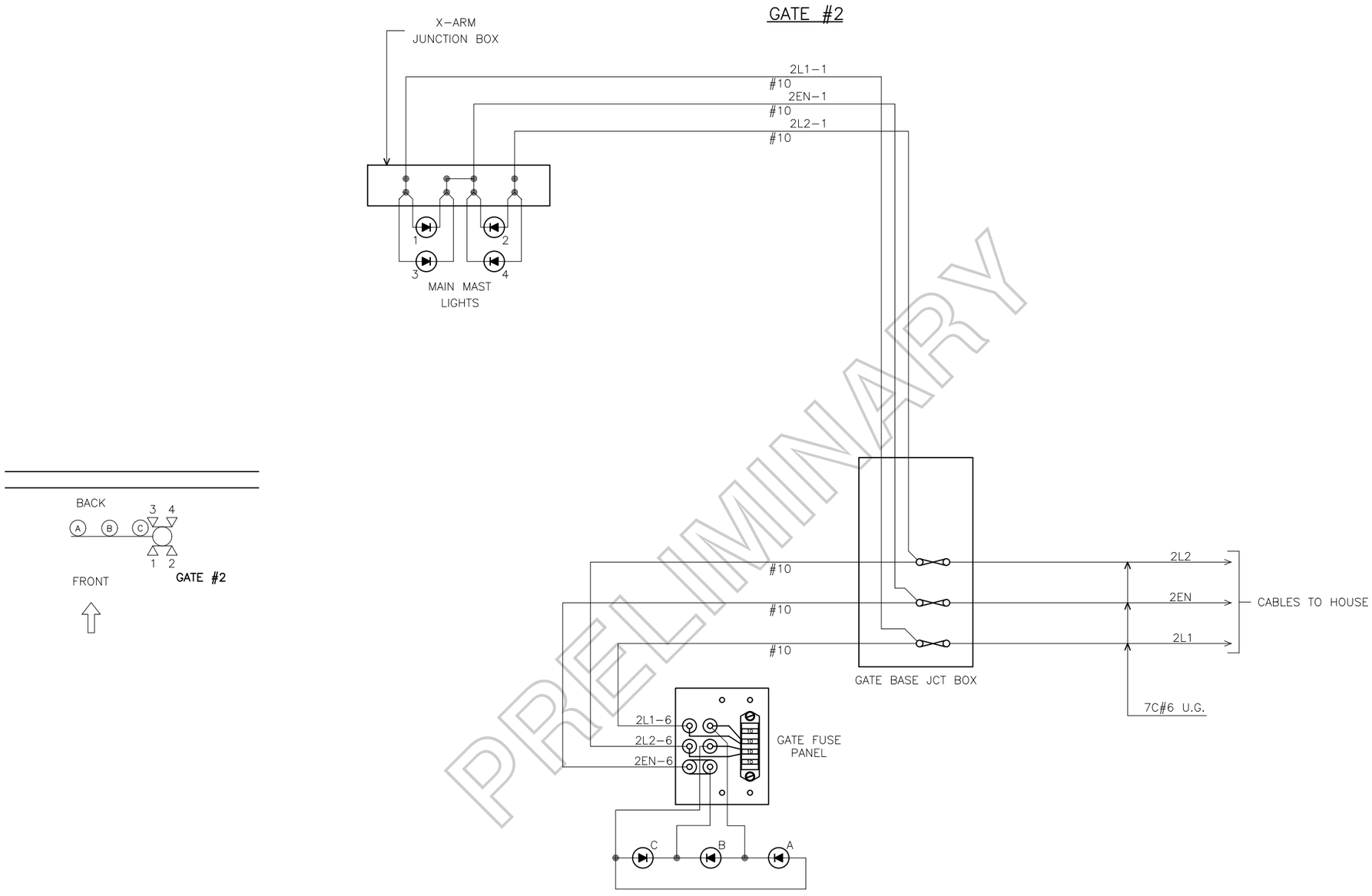

PRELIMINARY

NOTE:

* USE ATC 10 AMP FUSES ONLY

(◀) IS LED SYMBOL ONLY. INSTALL ACCORDING TO MANUFACTURER'S INSTRUCTIONS.

CHANGE FROM TYPICAL: Y

REVISION BLOCK

RIO GRANDE PACIFIC TECHNOLOGY
9601 CAMP BOWIE W BLVD
FORT WORTH, TX 76116
(817) 886-8210
WWW.RIOTECHNOLOGY.COM

Wheeling & Lake Erie Railway

LOCATION
SR 162
near SPENCER, OH
41.1001686,-82.1714440

ORIGINAL DATE 02/08/2018	TITLE GATE #2 LIGHTS (FAR SIDE)		
DESIGNER RGPT	SUB CAREY	CTC NO. CN21070	
DRAFTSMAN RGPT	RRMP N - 121.22	SCALE N.T.S.	
CHECKER RGPT	DOT NO. 002 038D	SHEET 15 OF 21	

MB–CHARGER
(SIDE "A" WALL)

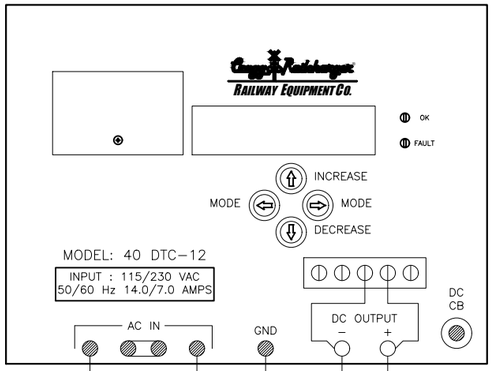

BASIC SETUP			
NO.	ABBREVATION	DEFAULT SETTING	DESIRED SETTING
1	PASSWORD	5	5
2	USER LEVEL	BASIC	BASIC
3	BATTERY TYPE	LEAD ACID OR NI–CAD	NI–CAD
4	NUMBER OF CELLS	–	9
5	VOLTS PER CELL	–	1.42

BATTERY BUSS DETAILS

MB BUSS (TOP)	AA	MN BUSS (BOTTOM)
SPARE	21	SPARE
SPARE	20	SPARE
CC50T	19	XP4 S7 IN2–
CC45T	18	XP4 S7 IN1–
DB1T	17	DB3T
SPARE	16	RCDR C1 IN8–
SPARE	15	RCDR C1 IN5–
RCDR C1 IN10+	14	RCDR C1 IN10–
RCDR CPU BATT+	13	RCDR CPU BATT–
DTMF BATT+	12	DTMF BATT–
MDSA–1 B+	11	MDSA–1 B–
MB BATT+	10	MN BATT–

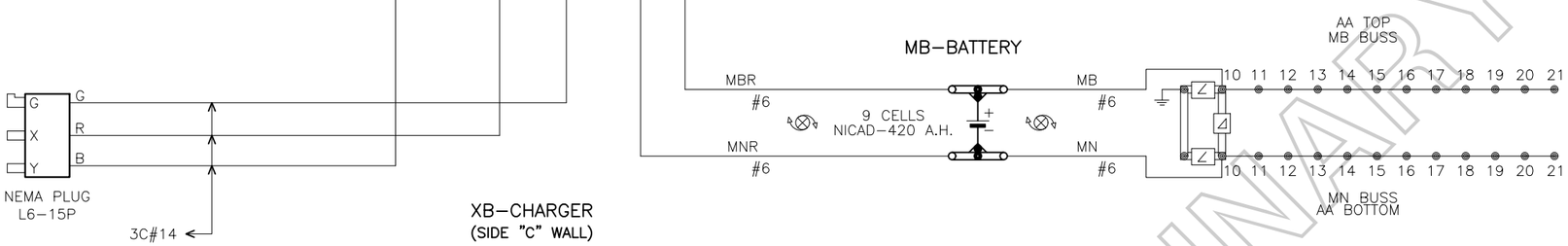

XB–CHARGER
(SIDE "C" WALL)

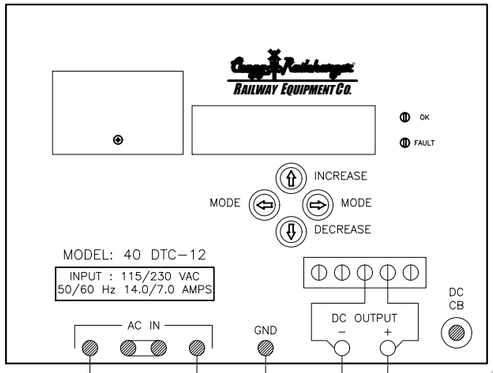

BASIC SETUP			
NO.	ABBREVATION	DEFAULT SETTING	DESIRED SETTING
1	PASSWORD	5	5
2	USER LEVEL	BASIC	BASIC
3	BATTERY TYPE	LEAD ACID OR NI–CAD	NI–CAD
4	NUMBER OF CELLS	–	10
5	VOLTS PER CELL	–	1.42

BATTERY BUSS DETAILS

XB BUSS (TOP)	CA	XN BUSS (BOTTOM)
RA4T	51	RA5T
RA16T	50	RA15T
XIP–A B	49	XIP–A N
SPARE	48	SPARE
SPARE	47	SPARE
SPARE	46	SPARE
DTMF CH2 H	45	XIP–A G1–
CC58T	44	XP4 S8 IN4–
FD COM	43	RCDR C2 IN9–
RCDR C1 IN9+	42	RCDR C1 IN9–
XIP–A L1B–B	41	XIP–A L1B–N
XB BATT+	40	XN BATT–

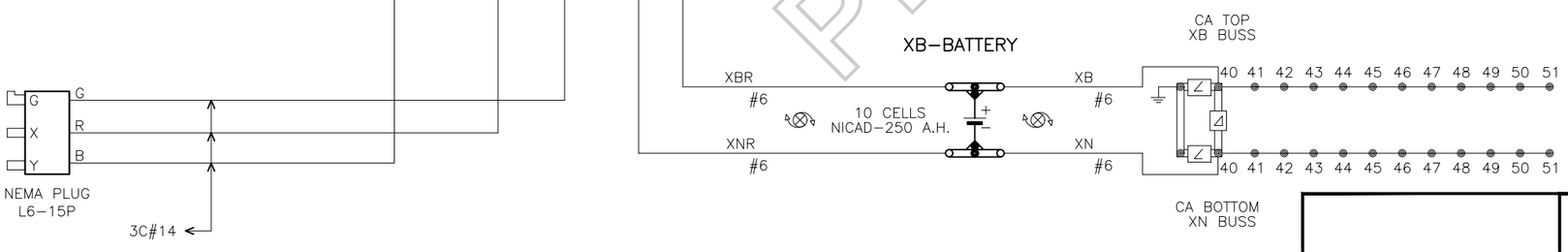

PRELIMINARY

CHANGE FROM TYPICAL: Y

REVISION BLOCK

RIO GRANDE PACIFIC TECHNOLOGY
9601 CAMP BOWIE W BLVD
FORT WORTH, TX 76116
(817) 886–8210
WWW.RIOTECHNOLOGY.COM

Wheeling & Lake Erie Railway

LOCATION
SR 162
near SPENCER, OH
41.1001686,–82.1714440

ORIGINAL DATE 02/08/2018	TITLE BATTERY CHARGERS		
DESIGNER RGPT	SUB CAREY	CTC NO. CN21070	
DRAFTSMAN RGPT	RRMP N – 121.22	SCALE 1"=2'	
CHECKER RGPT	DOT NO. 002 038D	SHEET 16 OF 21	

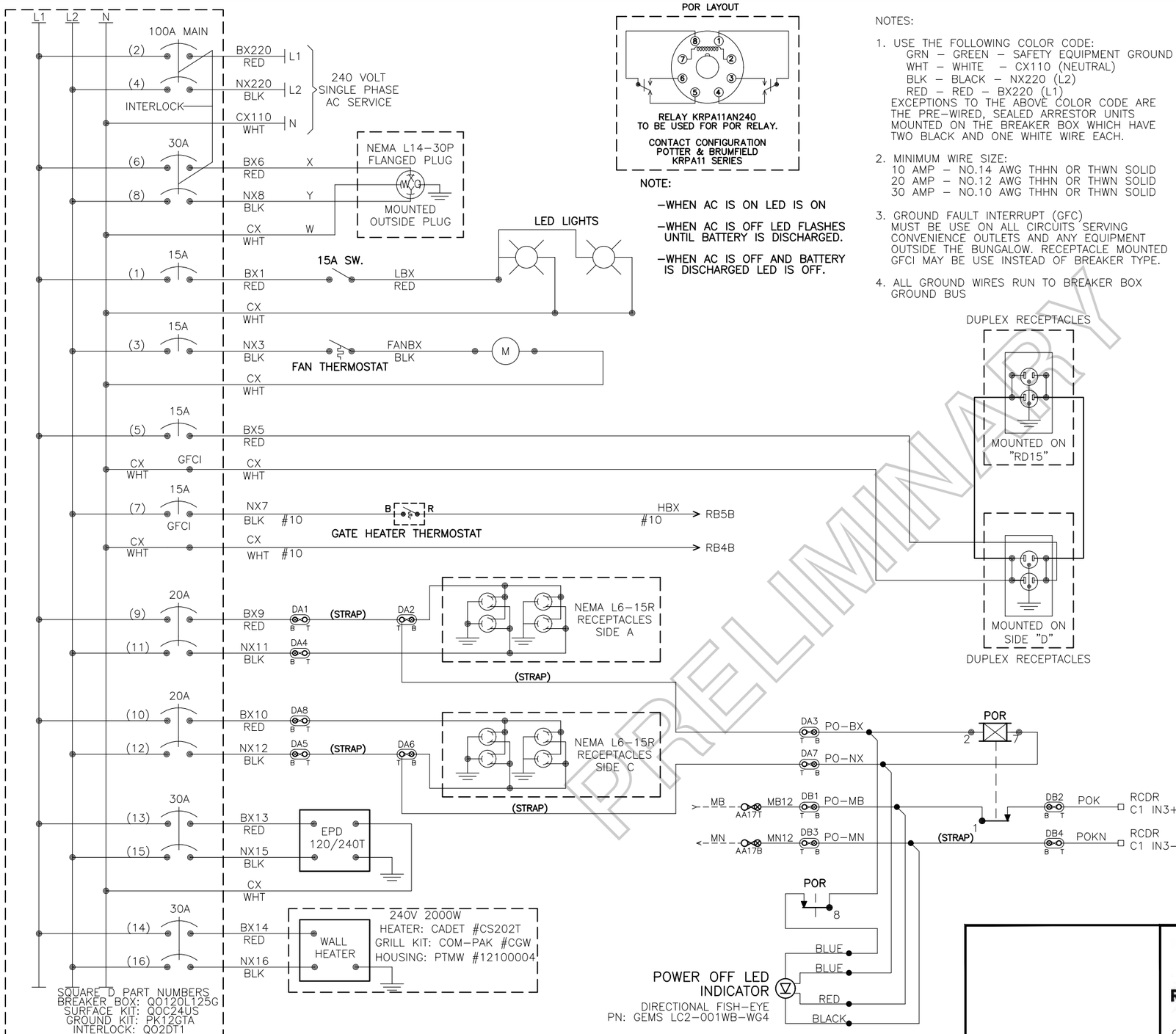

POR LAYOUT

RELAY KRPA11AN240 TO BE USED FOR POR RELAY.

CONTACT CONFIGURATION POTTER & BRUMFIELD KRPA11 SERIES

NOTE:

–WHEN AC IS ON LED IS ON

–WHEN AC IS OFF LED FLASHES UNTIL BATTERY IS DISCHARGED.

–WHEN AC IS OFF AND BATTERY IS DISCHARGED LED IS OFF.

NOTES:

1. USE THE FOLLOWING COLOR CODE:
   GRN – GREEN – SAFETY EQUIPMENT GROUND
   WHT – WHITE – CX110 (NEUTRAL)
   BLK – BLACK – NX220 (L2)
   RED – RED – BX220 (L1)
   EXCEPTIONS TO THE ABOVE COLOR CODE ARE THE PRE-WIRED, SEALED ARRESTOR UNITS MOUNTED ON THE BREAKER BOX WHICH HAVE TWO BLACK AND ONE WHITE WIRE EACH.
2. MINIMUM WIRE SIZE:
   10 AMP – NO.14 AWG THHN OR THWN SOLID
   20 AMP – NO.12 AWG THHN OR THWN SOLID
   30 AMP – NO.10 AWG THHN OR THWN SOLID
3. GROUND FAULT INTERRUPT (GFC) MUST BE USE ON ALL CIRCUITS SERVING CONVENIENCE OUTLETS AND ANY EQUIPMENT OUTSIDE THE BUNGALOW. RECEPTACLE MOUNTED GFCI MAY BE USE INSTEAD OF BREAKER TYPE.
4. ALL GROUND WIRES RUN TO BREAKER BOX GROUND BUS

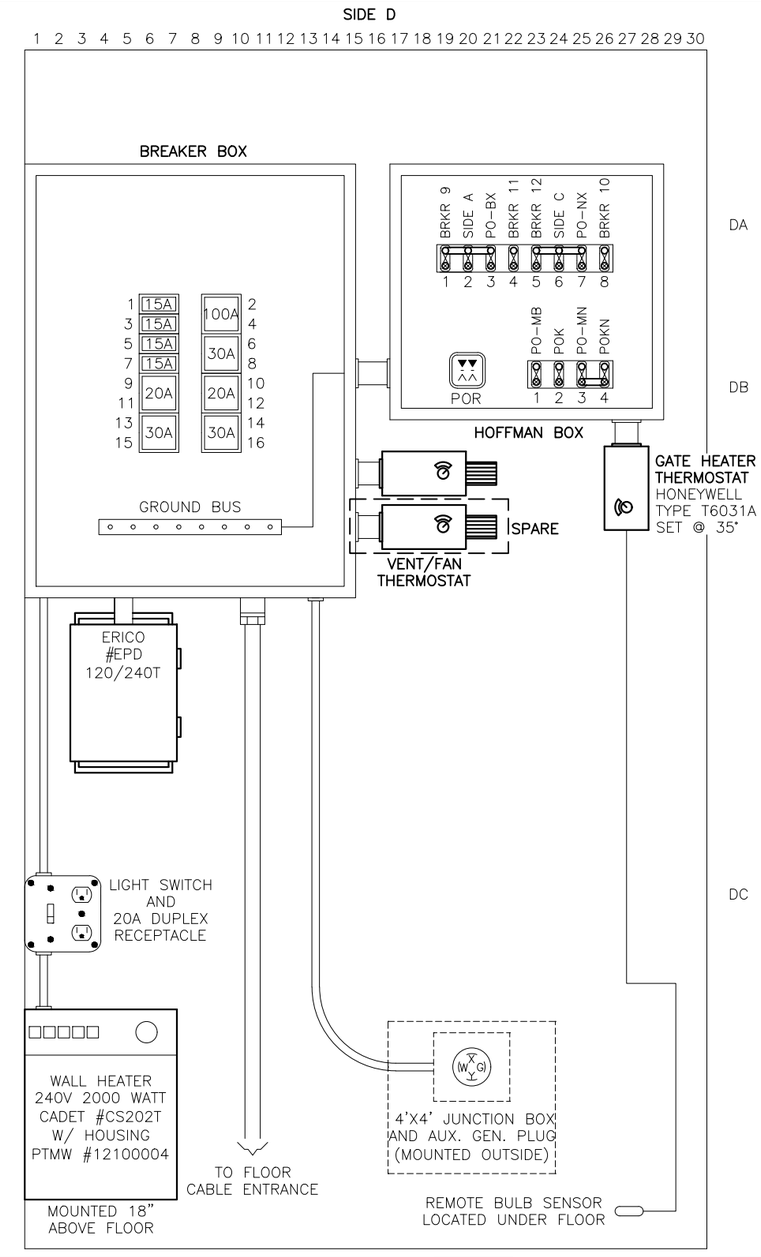

PRELIMINARY

CHANGE FROM TYPICAL: N

REVISION BLOCK

RIO GRANDE PACIFIC TECHNOLOGY
9601 CAMP BOWIE W BLVD
FORT WORTH, TX 76116
(817) 886-8210
WWW.RIOTECHNOLOGY.COM

Wheeling & Lake Erie Railway

LOCATION
SR 162
near SPENCER, OH
41.1001686,-82.1714440

ORIGINAL DATE	02/08/2018	TITLE	AC POWER DISTRIBUTION		
DESIGNER	RGPT	SUB	CAREY	CTC NO.	CN21070
DRAFTSMAN	RGPT	RRMP	N – 121.22	SCALE	1"=2'
CHECKER	RGPT	DOT NO.	002 038D	SHEET	17 OF 21

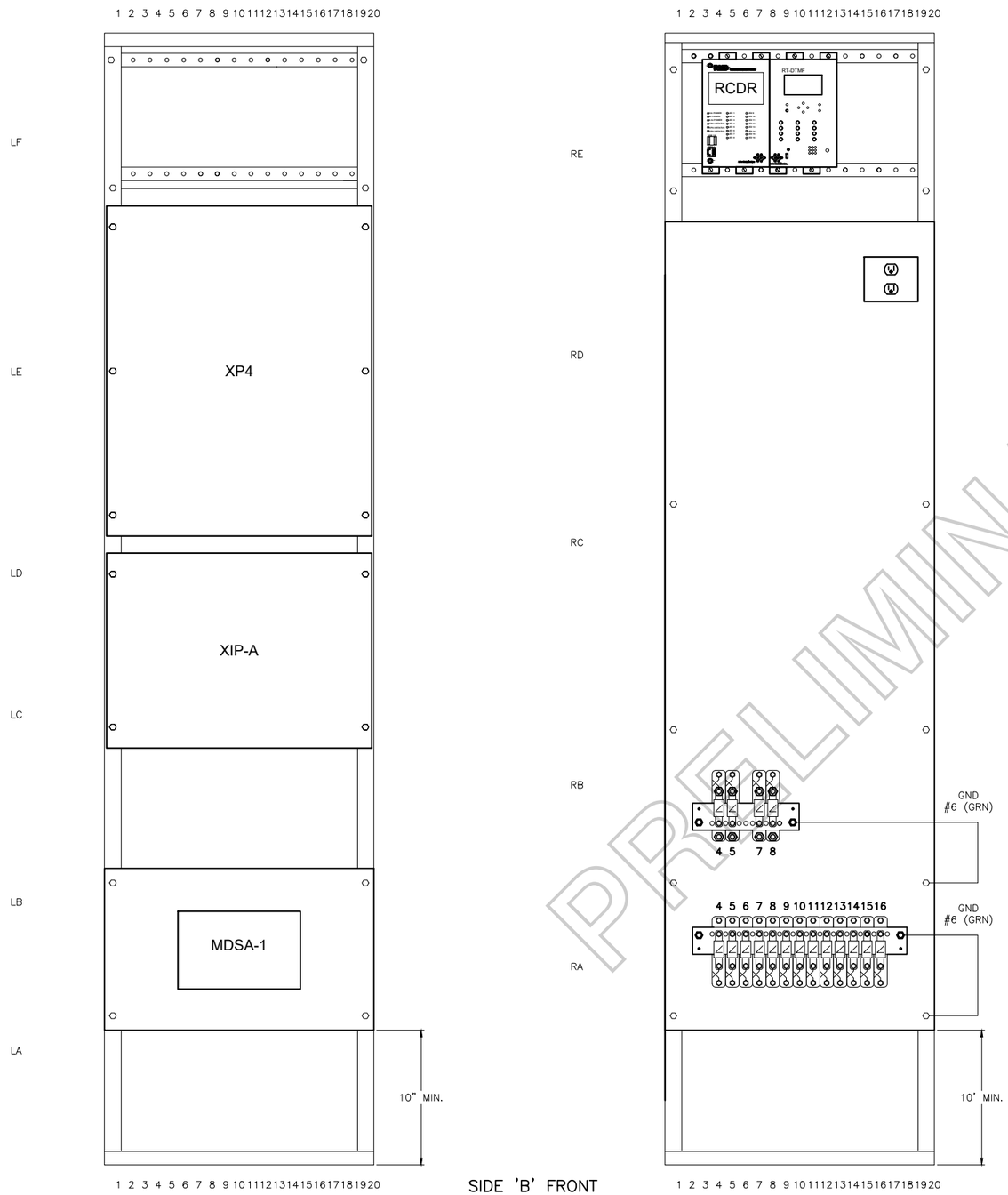

PRELIMINARY

CHANGE FROM TYPICAL: Y

REVISION BLOCK

RIO GRANDE PACIFIC TECHNOLOGY
9601 CAMP BOWIE W BLVD
FORT WORTH, TX 76116
(817) 886-8210
WWW.RIOTECHNOLOGY.COM

Wheeling & Lake Erie Railway

LOCATION
SR 162
near SPENCER, OH
41.1001686,-82.1714440

ORIGINAL DATE 02/08/2018	TITLE RACK FRONT VIEW		
DESIGNER RGPT	SUB CAREY	CTC NO. CN21070	
DRAFTSMAN RGPT	RRMP N – 121.22	SCALE 1"=2'	
CHECKER RGPT	DOT NO. 002 038D	SHEET 18 OF 21	

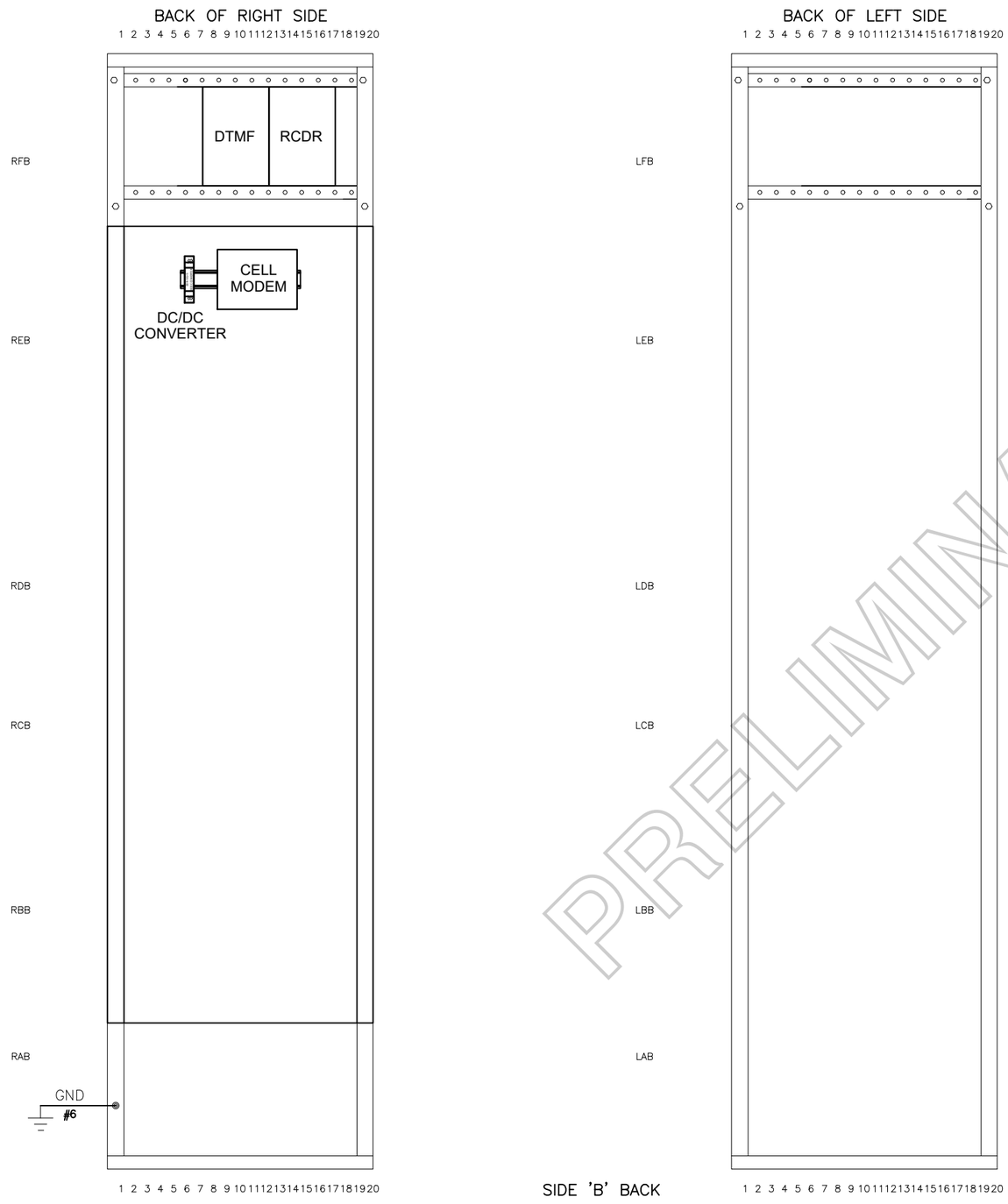

PRELIMINARY

CHANGE FROM TYPICAL: Y

REVISION BLOCK

RIO GRANDE PACIFIC TECHNOLOGY
9601 CAMP BOWIE W BLVD
FORT WORTH, TX 76116
(817) 886-8210
WWW.RIOTECHNOLOGY.COM

Wheeling & Lake Erie Railway

LOCATION
SR 162
near SPENCER, OH
41.1001686,-82.1714440

ORIGINAL DATE	02/08/2018	TITLE	RACK BACK VIEW		
DESIGNER	RGPT	SUB	CAREY	CTC NO.	CN21070
DRAFTSMAN	RGPT	RRMP	N – 121.22	SCALE	1"=2'
CHECKER	RGPT	DOT NO.	002 038D	SHEET	19 OF 21

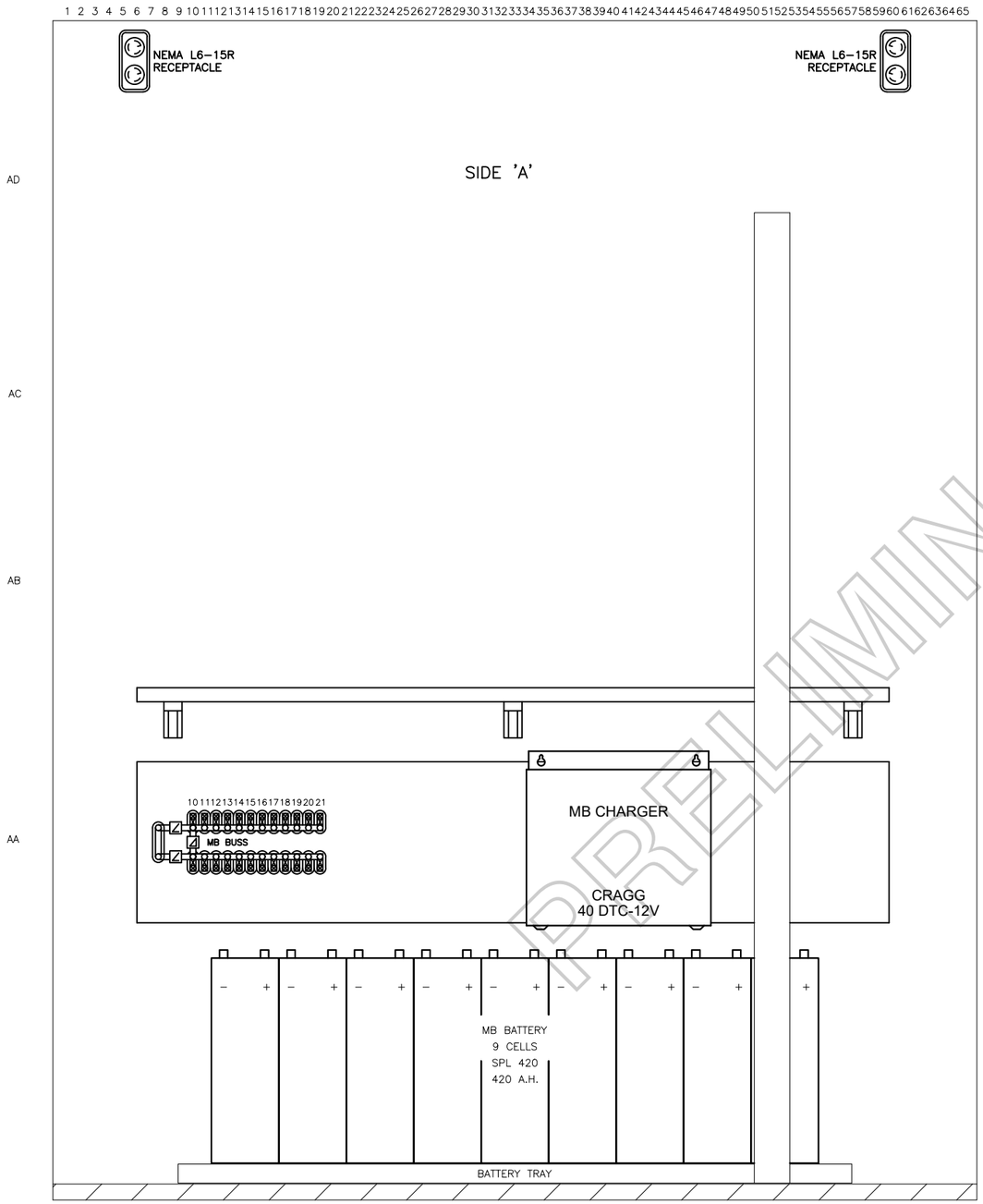

PRELIMINARY

CHANGE FROM TYPICAL: N

REVISION BLOCK

RIO GRANDE PACIFIC TECHNOLOGY

9601 CAMP BOWIE W BLVD
FORT WORTH, TX 76116
(817) 886-8210
WWW.RIOTECHNOLOGY.COM

Wheeling & Lake Erie Railway

LOCATION
SR 162
near SPENCER, OH
41.1001686,-82.1714440

ORIGINAL DATE 02/08/2018	TITLE SIDE "A"		
DESIGNER RGPT	SUB CAREY	CTC NO. CN21070	
DRAFTSMAN RGPT	RRMP N – 121.22	SCALE 1"=2'	
CHECKER RGPT	DOT NO. 002 038D	SHEET 20 OF 21	

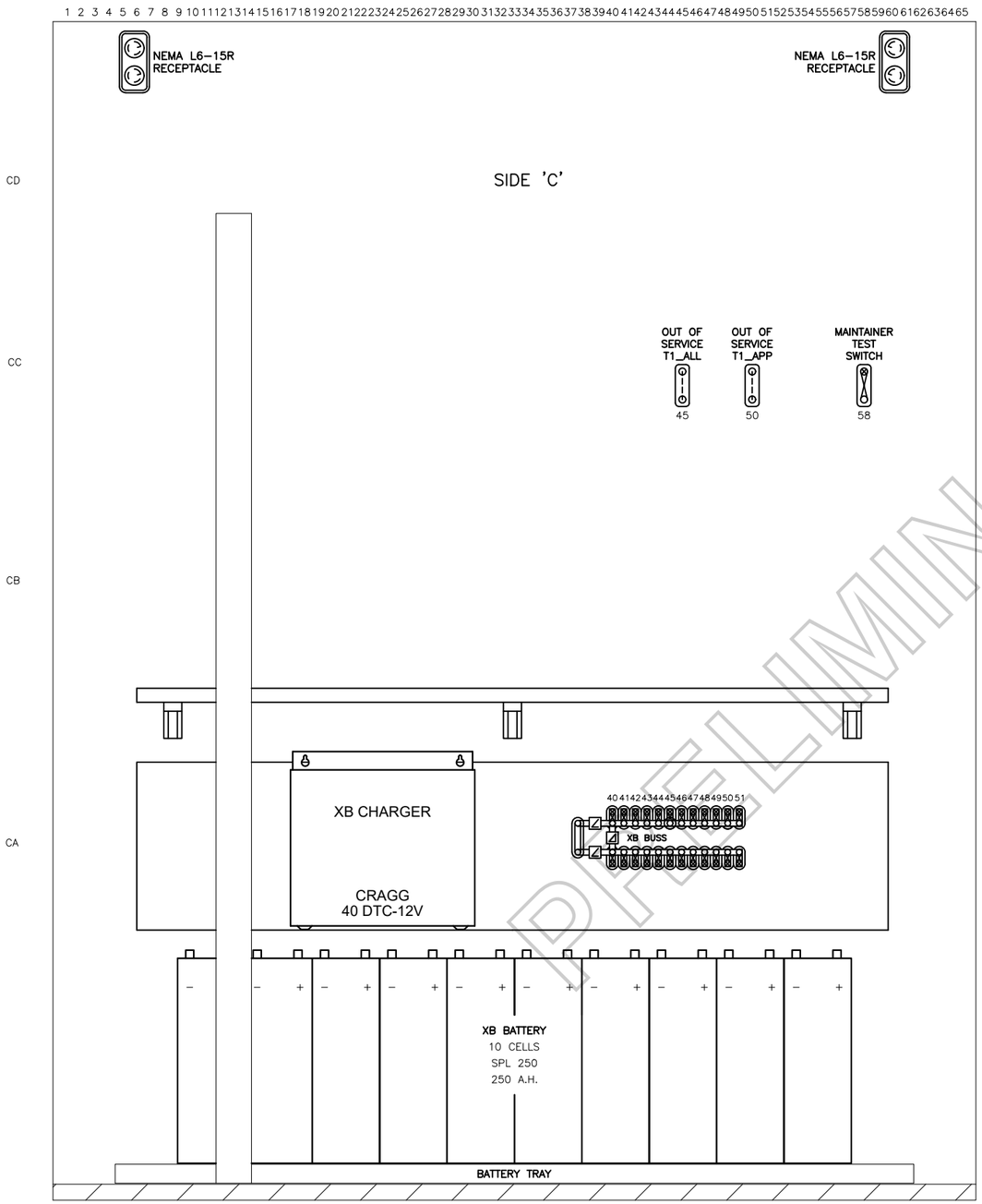

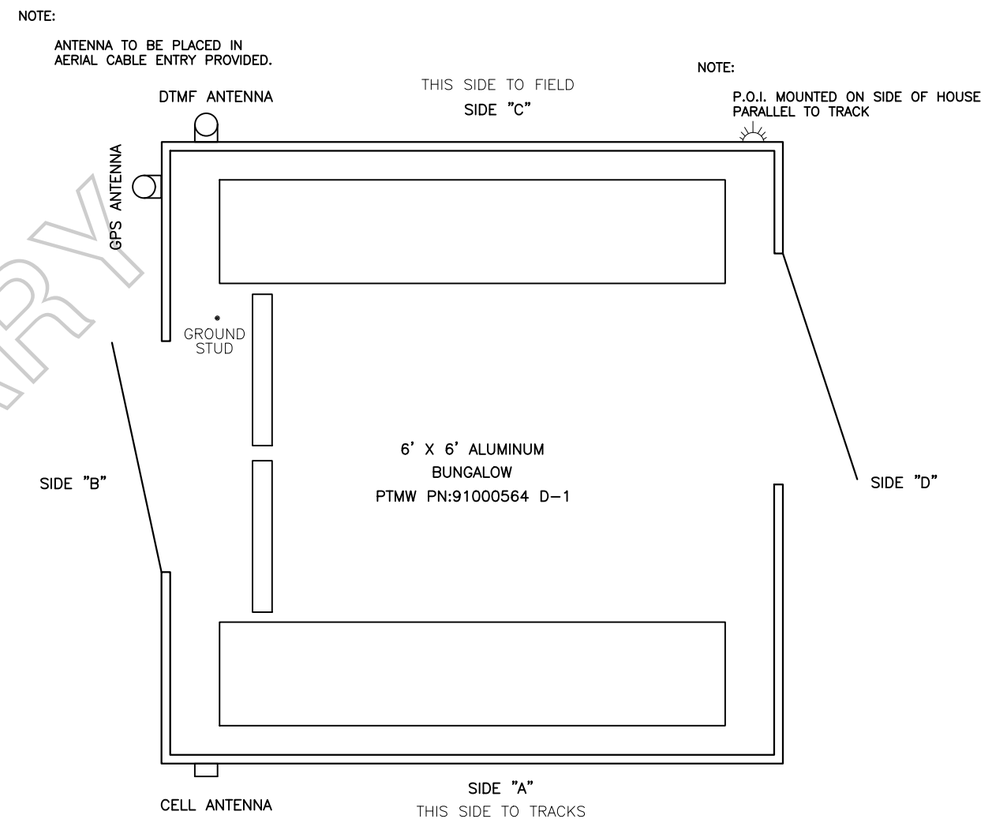

PRELIMINARY

CHANGE FROM TYPICAL: N

REVISION BLOCK

RIO GRANDE PACIFIC TECHNOLOGY
9601 CAMP BOWIE W BLVD
FORT WORTH, TX 76116
(817) 886-8210
WWW.RIOTECHNOLOGY.COM

Wheeling & Lake Erie Railway

LOCATION
SR 162
near SPENCER, OH
41.1001686,-82.1714440

ORIGINAL DATE	02/08/2018	TITLE	SIDE "C"		
DESIGNER	RGPT	SUB	CAREY	CTC NO.	CN21070
DRAFTSMAN	RGPT	RRMP	N - 121.22	SCALE	1"=2'
CHECKER	RGPT	DOT NO.	002 038D	SHEET	21 OF 21

Ohio | Rail Development Commission

Mike DeWine, Governor
Jon Husted, Lt. Governor

Mark Policinski, Chair

September 30, 2021

Mr. Tim Andrews
Wheeling & Lake Erie Railway
100 East First Street
Brewster, Ohio 44613

RE: Grade Crossing Warning Device Improvements.
Lorain County, SR162, DOT# 002-038D, PID 115370

Dear Mr. Andrews:

A diagnostic review was held at the above grade crossing on April 8, 2021. The crossing has been recommended for the installation of flashing lights and roadway gates.

Wheeling & Lake Erie Railway (WE) is authorized to proceed with the site plans and cost estimates or bid package for this project. This authorization is made with the stipulation and understanding that any field work needs prior approval before work begins. This authorization is made with the stipulation and understanding that an approved estimate may contain entries for items or activities that may be cited and found to be ineligible for federal participation during the project audit. Please note that the railroad must provide ORDC with a plan stamped by a professional engineer licensed in the State of Ohio prior to acceptance and close out of the project.

The diagnostic review form is attached. Please note any recommendations (page 7), if any, made by the team about requirements for this location. Any minor roadway work necessary for MUTCD compliance should be incorporated into the PE and such costs will flow through the railroad reimbursement process.

The Project Manager for this project is James Tucker. James can be reached at (614) 398-6897, or james.tucker@dot.ohio.gov, if you have any questions.

Sincerely,

Project Manager

C: John Williams, Director, Transportation Department, PUCO
Jill Henry, Rail Division Chief, PUCO

Heather Hamilton, ORDC
ORDC (file)

Attachments: 3 (diagnostic review form, letter agreement, purchase order)

Ohio | Rail Development Commission

Mike DeWine, Governor
Jon Husted, Lt. Governor

Scott Corbitt, Chair

September 1, 2021

Wheeling & Lake Erie Railroad
Mr. Tim Andrews
Signals & Communications Supervisor
100 E. First Street
Brewster, Ohio 44613

Subject: Grade Crossing Warning Device Improvements
Lorain County, State Route 162, DOT# 002038D, PID 115370

Dear Mr. Andrews:

A diagnostic review was conducted at the subject grade crossing on April 8, 2021. As a result of the review, the existing warning devices will be upgraded to flashing lights and roadway gates.

The project shall be completed in compliance with Agreements No. 0001-A, dated September 17, 1990, entered into by the State of Ohio and Wheeling & Lake Erie Railroad (WE) and incorporated as if fully rewritten herein. The construction shall also meet the general terms and conditions under the Fixing America's Surface Transportation Act and subsequent amendments and the State of Ohio's Federally Funded Warning Device Program.

Preliminary engineering (PE) and construction costs shall be borne fifty (50%) by ORDC and fifty (50%) by Wheeling & Lake Erie Railroad. Reimbursable costs will be limited by the ORDC based on approved estimates and bid tabulations, if applicable. These limits will be quantified by the ORDC in its construction authorization to WE and may be amended by the ORDC based on revised estimates and bid tabulations.

This Letter Agreement and the approved plans constitute the scope of the projects. WE shall notify ORDC in writing of any changes in the scope of work which are not in the approved plans and estimates and secure approval in writing of same before the work is performed.

PE will not be commenced by WE prior to ORDC issuing a PE authorization. PE will be submitted by WE to ORDC within ninety (90) days or other time specified by ORDC in the PE authorization. Construction will not be commenced by WE prior to ORDC issuing a construction authorization. Construction will be completed by WE within nine (9) months or other time specified in the time specified by ORDC in the construction authorization.

Please indicate your acceptance of the terms and conditions of this Letter Agreement by signing and returning one (1) copy to me at the address listed above and retain a copy for your files. This Agreement may be executed in one or more counterparts, each of which shall be deemed to be a duplicate original, but all of which taken together shall be deemed to constitute a single Agreement.

Sincerely,

Date: 9/2/2021

Matthew R. Dietrich
Executive Director

Wheeling & Lake Erie Railroad:

By: _____

Title: S&C Supervisor

Date: 9-3-21

LOR State Route 162 WLE PID 115370 DOT #002038D

State Route 162 (DOT #002038D), Lorain County, Wheeling & Lake Erie
4/8/2021

Crossing at a glance:

ORDC Notes:

Please Sign In

Name	Title	Organization	Signature
James Tucker	614-398-6897	ORDC	
	Phone Number	Email: james.tucker@dot.ohio.gov	
Tim Andrews	330-767-7255	Wheeling & Lake Erie	
	Phone Number	Email: tandrews@wlerwy.com	
Randy Johr	330-495-3810	PUCO	
	Phone Number	Email: randy.johr@puco.ohio.gov	
Jamie Lowery	330-285-6820	ODOT	
	Phone Number	Email: jamie.lowery@dot.ohio.gov	
Shawn Zinsky			
	Phone Number	Email	
	Phone Number	Email	
	Phone Number	Email	
	Phone Number	Email	

Reason for Request: Constituent
(e.g. formula, accident, constituent, etc.)

Date: 4/8/2021

Location Data					
Street or Road Name:	State Route 162				
County:	Lorain	Township:		US DOT No.:	002038D
City (in or near):	near Spencer	Railroad Name:	WE	RR Milepost:	121.22

Safety Data (Obtain crash reports, if possible)		
	Initial Information (from database)	**Revised**
Number & dates of vehicle crashes in previous 5 years:	n/a	
Number & dates of pedestrian/bicycle crashes in previous 5 years:	n/a	
Hazard Ranking: 2585	Date Run: 04/01/2021	

Existing Traffic Control Devices			
Type of Warning Devices	**Installed?**		**Quantity/Comments**
HIGHWAY			
Advance Warning Signs (condition?)	☒ Yes	☐ No	2 - Good Condition
'Stop' Signs	☐ Yes	☒ No	
'Stop Ahead' Signs	☐ Yes	☒ No	
Pavement Markings (condition?)	☒ Yes	☐ No	2 - EB needs refreshed
Dynamic Envelope Markings (condition?)	☐ Yes	☒ No	
Illumination	☐ Yes	☒ No	
'No Turn' Signs (highway/passive)	☐ Yes	☒ No	
Barriers/fencing (pedestrian/bicycle)	☐ Yes	☒ No	
LOOK Sign	☐ Yes	☒ No	
Do Not Stop On Track Sign	☐ Yes	☒ No	
RAILROAD			
Crossbucks	☒ Yes	☐ No	2 - Fair
Crossbucks – assembly with Stop	☐ Yes	☒ No	
Crossbucks – assembly with Yield	☐ Yes	☒ No	
Mast-Mounted Flashing Lights	☒ Yes	☐ No	4 - Pair
Cantilever Flashing Lights	☐ Yes	☒ No	Number: Length:
Side Lights	☐ Yes	☒ No	
LED or Incandescent Lights? Size?	☒ Yes	☐ No	12" LED
Automatic Gates	☐ Yes	☒ No	Number: Length:
Bells	☒ Yes	☐ No	Number: 1
Sidewalk/Pedestrian Gate Arms	☐ Yes	☒ No	Number: Length:
'No Turn' Signs (railroad/active)	☐ Yes	☒ No	
Is crossing flagged by train crew?	☐ Yes	☒ No	
OTHER	☐ Yes	☐ No	

Railroad Data

Type of Train: ☑ Freight ☐ Intercity Passenger ☐ Transit ☐ Shared Use Transit ☐ Commuter ☐ Tourist/Other

Railroad Characteristics	Initial Information (from database)	Revised
Total trains per day	6	
<1 per day? Trains per week	-	
Day thru trains	3	
Night thru trains	3	
Switching	0	
Total number of tracks	1	
Number of main tracks	1	
Number of other tracks	0	
Maximum train speed	40	
Typical train speed	30-40	
Amtrak	-	

Are there other track(s) crossing this same roadway within 100ft of this crossing? ☐ Yes ☑ No

If yes, Crossing DOT# (if different) _____

If yes, distance _____ (take measurement between track centerlines at closest point along roadway)

If multiple tracks, can two trains occupy crossing at the same time? ☐ Yes ☒ No

Can one train block the motorists' view of another train at the crossing? ☐ Yes (explain below) ☒ No

Can one or more tracks be eliminated through the crossings? ☐ Yes ☒ No

Comments:

Circuitry: ☒ Constant Warning Time ☐ Motion Detection ☐ AFO ☐ PTC ☐ DC ☐ Other _____

Roadway Data

Local Highway Authority:	Lorain County	
Roadway Characteristics	**Initial Information (from database)**	**Revised**
Average Daily Traffic	1,300 (2010)	1800
Highway Paved	☑ Yes ☐ No	☐ Yes ☐ No

Roadway Surface: ☑ Blacktop ☐ Gravel ☐ Concrete Other_____

Roadway width (paved/travelled way): 24 ft

Number of Highway Lanes	2	
Urban or Rural	Rural	
Vehicle Speed: 55 MPH		

School Bus Operation: ☒ Yes ☐ No Amount 7

Location of nearby schools: Black River Local

Hazardous Materials Trucks: ☑ Yes ☐ No Amount (from FRA) 8% LHA verified/changed?

Shoulders: ☐ Yes ☒ No

Is the Shoulder Surfaced? ☐ Yes ☒ No If yes, shoulder width: _____ft.

Is there existing guardrail along the roadway in crossing vicinity? ☐ Yes ☒ No

Crossing Angle ☑ 0-29° ☐ 30-59° ☐ 60-90° Measured in _____ Quadrant?

Quadrant SW Curb & Gutter:	Quadrant NE Curb & Gutter:
☐ Functional (Curb height = 4" or more)	☐ Functional (Curb height = 4" or more)
☐ Non-functional (Curb height = less than 4")	☐ Non-functional (Curb height = less than 4")
☒ None	☒ None

Is there a nearby intersection that could cause queuing over the crossing? ☐ Yes ☒ No

If yes, distance _____

Is this intersection signalized? ☐ Yes ☒ No

Are there signals currently interconnected with the existing crossing warning devices? ☐ Yes ☒ No

Is there a 'Do Not Stop on Track' sign? ☐ Yes ☒ No

Is a roadway improvement project (e.g. widening, turn lanes, nearby new or upgraded traffic signal, sidewalk) planned at or near this location in the foreseeable future? ☐ Yes ☒ No

If yes:

Improvement type_____ Lead Agency_____ Timeline/completion_____

Pedestrian & Bicycle Data

Regular pedestrian usage: ☐ Yes ☒ No Volumes: ☐ Occasional ☐ <20 ☐ 20-60 ☐ >60

Is sidewalk present in the approach? ☐ Yes ☒ No Quadrants:

Does crossing surface accommodate pedestrians? ☐ Yes ☒ No

Both sides of roadway? ☐ Yes ☒ No If no, which side is paved?

Pedestrian generators in close proximity (e.g. schools, sports/entertainment venues)? ☐ Yes ☒ No

Comments:

Regular bicycle usage: ☒ Yes ☐ No

☒ Roadway ☐ Dedicated Lane (on street) ☐ Dedicated Path (off street) ☐ Shared Use (pedestrian/bicycle) Path
☐ Bikes must use sidewalk

Future plans for pedestrian or bicycle routes? ☐ Yes ☒ No

Comments:

Utility Information

Is commercial power available? ☒ Yes ☐ No

Utility Provider (Company Name) Lorain Medina Rural Electric

Nearest Available Power Source @ crossing Pole # 8-13-3051

What other utilities are present? ☐ Gas ☐ Cable ☐ Telephone ☐ Fiber Optic Cable (add locations to sketch)
☐ Petroleum ☐ Water ☐ Sanitary Sewer ☐ Other

Comments: unknown, OUPS was not completed.

Surface

Surface review form completed? ☐ Yes ☒ No Surfaced replaced last year

Sight Preview (REFER TO TABLES)

If non-gated crossing, is clearing sight distance adequate in all quadrants? (See Table 1) ☐ Yes ☒ No All Quads 960'

Is stopping sight distance adequate? (See Table 2) ☒ Yes ☐ No If no, which quadrant? _____ 570'

When considering recommendations for bicycle treatments:

Bicycle sight distance adequate? ☒ Yes ☐ No If no, which quadrant? _____ 390'

When considering recommendations for pedestrian treatments:

Pedestrian sight distance adequate? ☒ Yes ☐ No If no, which quadrant? _____ 4180'

Potential Red Flags / Project Challenges
Traffic Signal Preemption (include traffic signal intersection name and LHA with jurisdiction over traffic signal, if known): N/A
Crossing Consolidation or Closure: N/A
Real Estate or ROW: RR = 47' EAST
Culvert / Drainage / Ballast Conditions: N/A
Roadway and/or Sidewalks: N/A
Circuitry (e.g. reaches out to other crossings, specific needs, etc.): overlap with West Rd and Firestone Rd.
Environmental: N/A
Utilities: Unknown
Other:

Potential Closure

Is it the consensus of the Diagnostic Review Team that this is a potential closure project? NO

Explain reasons: State Route

Diagnostic Team Recommendations

☐ **No improvements needed**	Quadrants Needed
☒ **Install/upgrade active devices**	
☐ Automatic Flashing Lights (AFLS)	
☐ AFLS /Cants	
☒ AFLS / Gates	NE + SW Quads
☐ AFLS / Gates / Cants	
☒ Bells / number	
☒ Upgrade circuitry / type	XP-4
☐ Sidelights	
☒ LED Upgrades	12"
☐ Guardrail Needed	
☐ Install/Replace curb	
☒ Bungalow placement & offset from rail & highway	Same as existing
☐ Other (define)	

Comments:

☐ Install/upgrade traffic signal preemption

Other (define):

Diagnostic Team Recommendations (cont.)

PEDESTRIAN/BICYCLE Treatments (additional, not included above)

☐Crossing Surface (specify)	☐Sidewalk (specify)
☐Detectable warning surfaces	☐LOOK Sign (R15-8)
☐Stop lines	☐Illumination
☐Dynamic envelop markings	☐Channelization
☐Path delineation	☐Fencing/barriers

☐Other

Comments:

Acknowledgement of Recommendations (each entity represented at the diagnostic must have at least one signature/initial acknowledgement):

[signature]	[signature]	
Jamie Lowery	[signature]	
Randy John		

Field Sketch (optional)

Include utilities as marked by OUPS and LHA; include ROW boundaries as indicated by railroad and LHA.

Clearing Sight Distances

Maximum Authorized Train Speed	Distance (dT) Along Railroad from Crossing (ft)
1 - 10	240
15	360
20	480
25	600
30	720
35	840
40	960
45	1080
50	1200
55	1320
60	1440
65	1560
70	1680
75	1800
80	1920
85	2040
90	2160

Source: R-H Grade Crossing Handbook Table 36 (pp. 132-133)

Notes:

All calculated distances are rounded up to the next higher 5-foot increment.

Distances indicated are for 65-ft double bottom semi-tractor trailers and level single track 90 degree crossings; and may need to be adjusted for multiple tracks, skewed crossings or approaches on grades.

Clearing Sight Distance is to be measured in each vehicle travel direction at non-gated crossings as viewed from a point 25 feet from centerline of nearest track in the center of whichever travel lane is nearest the direction along track being measured.

Stopping Sight Distances

Highway Vehicle Speed	Distance (dH) Along Roadway from Crossing (ft)
0	n/a
5	50
10	70
15	105
20	135
25	180
30	225
35	280
40	340
45	410
50	490
55	570
60	660
65	760
70	865

Source: R-H Grade Crossing Handbook Table 36 (pp. 132-133)

Notes:

All calculated distances are rounded up to the next higher 5-foot increment.

Distances indicated are for 65-ft double bottom semi-tractor trailers on dry level pavements.

Stopping Sight Distance is to be measured on each roadway approach to crossing from stop bar.

Bicycle & Pedestrian Clearing Sight Distances

Clearing Sight Distance from Stop Position*											
Crossing of one track								Crossing 2 Tracks		Crossing 3 Tracks	
Train Speed	Car	Single-unit Truck	Bus	WB-50 Semitruck	65-foot Double Truck	Pedestrian[1]	Bicyclist[2]	Pedestrian[1]	Bicyclist[2]	Pedestrian[1]	Bicyclist[2]
10	105	185	200	225	240	120	100	180	120	240	140
20	205	365	400	450	485	240	200	360	240	480	270
25	255	455	500	560	605	300	250	450	290	590	340
30	310	550	600	675	725	360	290	530	350	710	410
40	410	730	795	895	965	480	390	710	470	950	540
50	515	910	995	1,120	1,205	590	490	890	580	1180	670
60	615	1,095	1,195	1,345	1,445	710	580	1060	700	1420	810
70	715	1,275	1,395	1,570	1,680	830	680	1240	810	1650	940
80	820	1,460	1,590	1,790	1,925	950	780	1420	930	1890	1080
90	920	1,640	1,790	2,015	2,165	1060	870	1590	1040	2120	1210

*A single track, 90-degree, level crossing

[1] Walking 3.5 feet per second across tracks 15 feet apart, with a 2-second reaction time to reach a decision point 10 feet before the center of the first track, and clearing 10 feet beyond the centerline of the second track.

[2] Bicycling 8 miles per hour across tracks 15 feet apart, from a stopped position 10 feet before the center of the first track with an acceleration of 2.5 feet per second, and clearing 10 feet beyond the centerline of the second track on a bike of 6 feet length.

This foregoing document was electronically filed with the Public Utilities

Commission of Ohio Docketing Information System on

1/27/2022 2:24:36 PM

in

Case No(s). 22-0067-RR-FED

Summary: Application In the Matter of a Request for the Installation of Active Warning Devices at the Wheeling & Lake Erie Railroad Grade Crossing, DOT#002-038D, at SR 162 in Lorain County, Ohio. electronically filed by Mrs. Jill A. Henry on behalf of PUCO/Rail Division