DICKINSON WRIGHT PLLC

150 E. GAY STREET, 24TH FLOOR
COLUMBUS, OH 43215-3192
TELEPHONE: (614) 591-5461
FACSIMILE: (844) 670-6009
http://www.dickinsonwright.com

CHRISTINE M.T. PIRIK
CPirik@dickinsonwright.com

September 24, 2020

Jay Agranoff and Michael Williams
Administrative Law Judges
Ohio Power Siting Board
Legal Department
180 East Broad Street, 12th Floor
Columbus, Ohio 43215-3797

Re: **Case No. 18-1607-EL-BGN -** In the Matter of the Application of Firelands Wind, LLC for a Certificate of Environmental Compatibility and Public Need to Construct a Wind-Powered Electric Generation Facility in Huron and Erie Counties, Ohio.
Release of Turbine Safety Manuals

Dear Honorable Mr. Agranoff and Mr. Williams:

On January 31, July 10, September 12, and October 4, 2019, Firelands Wind, LLC ("Applicant") filed motions for protective orders requesting confidential treatment of the Vestas, Siemens Gamesea, GE, and Nordex turbine safety manuals. At this time, the Applicant is withdrawing its request for confidential treatment of the GE manual and filing that manual in the open record. With regard to the Vestas, Siemens Gamesea, and Nordex manuals, upon review, it has been determined that there are still portions of the manuals that require confidential treatment. Therefore, the Applicant is filing the nonconfidential portions of the Vestas, Siemens Gamesea, and Nordex manuals in the open record and revising its request for a protective order to only cover those portions of the manuals that require confidential treatment. The nonconfidential manuals are attached hereto (Attachments 1 through 4).

We are available, at your convenience, to answer any questions you may have.

Respectfully submitted,

/s/ Christine M.T. Pirik
Christine M.T. Pirik (0029759)
Terrence O'Donnell (0074213)
William V. Vorys (0093479)
Jonathan R. Secrest (0075445)
Madeline Fleisher (0091862)
DICKINSON WRIGHT PLLC
150 East Gay Street, Suite 2400
Columbus, Ohio 43215
cpirik@dickinsonwright.com
todonnell@dickinsonwright.com
wvorys@dickinsonwright.com
jsecrest@dickinsonwright.com
mfleisher@dickinsonwright.com
Attorneys for Firelands Wind, LLC

Enclosure
Cc: Theresa White
Jonathan Pawley

CERTIFICATE OF SERVICE

The Ohio Power Siting Board's e-filing system will electronically serve notice of the filing of this document on the parties referenced in the service list of the docket card who have electronically subscribed to these cases. In addition, the undersigned certifies that a copy of the foregoing document is also being served upon the persons below this 24th day of September, 2020.

/s/ Christine M.T. Pirik
Christine M.T. Pirik (0029759)

Counsel/Intervenors via email:

werner.margard@ohioattorneygeneral.gov
brett.kravitz@ohioattorneygeneral.gov
katherine.walker@ohioattorneygeneral.gov
norwichtwp1339@gmail.com
richardwiles@willard-oh.com
rstrickler@huroncountyohprosecutor.com
jstephens@huroncountyohprosecutor.com
ggross@eriecounty.oh.gov
heather@hnattys.com
jvankley@vankleywalker.com
pjleppla@leplaw.com
michael.gerrard@arnoldporter.com
hwa2108@columbia.edu
missyeb3@gmail.com
baanc@aol.com
r_ladd@frontier.com

Administrative Law Judges via email:

jay.agranoff@puco.ohio.gov
michael.williams@puco.ohio.gov

Attachment 1

Vestas

Restricted
Document no.: 0067-7060 V00
2017-06-21

General Description
4MW Platform

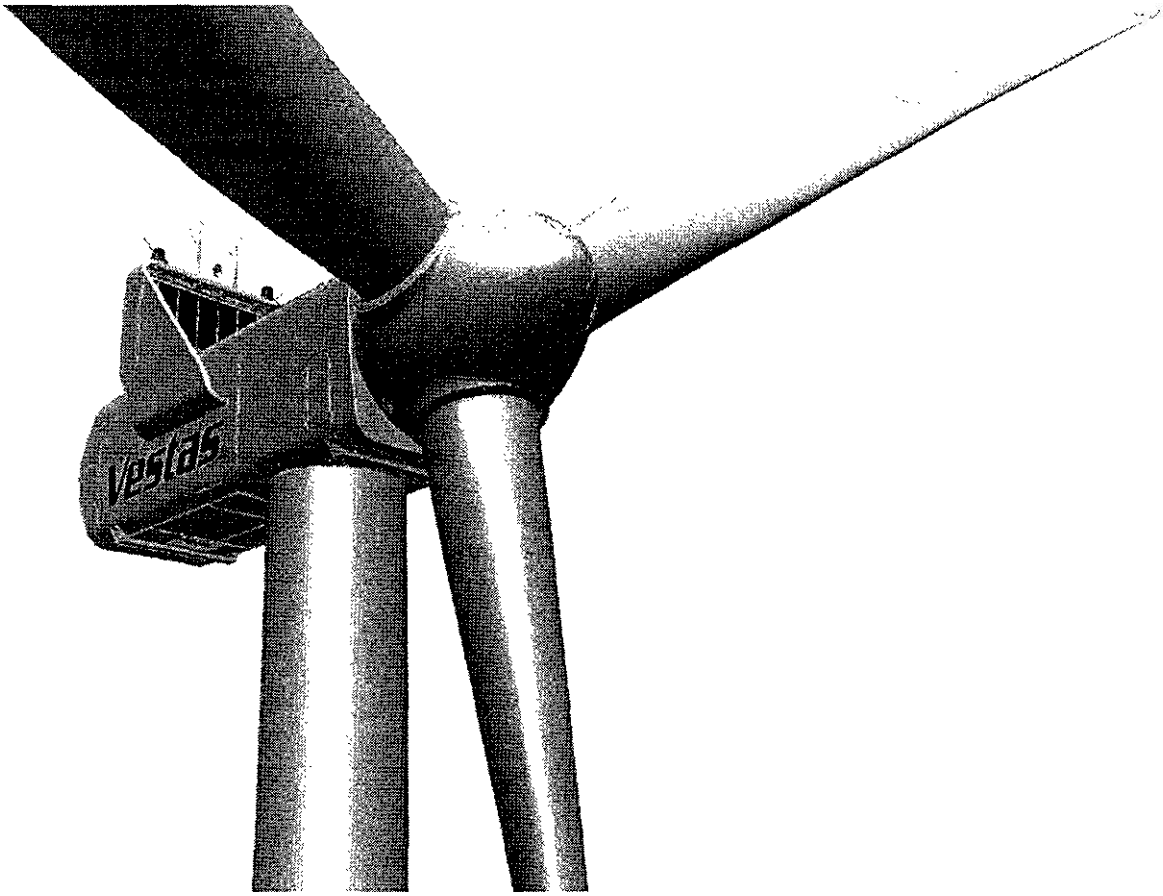

Vestas Wind Systems A/S · Hedeager 42 · 8200 Aarhus N · Denmark · www.vestas.com

VESTAS PROPRIETARY NOTICE: This document contains valuable confidential information of Vestas Wind Systems A/S. It is protected by copyright law as an unpublished work. Vestas reserves all patent, copyright, trade secret, and other proprietary rights to it. The information in this document may not be used, reproduced, or disclosed except if and to the extent rights are expressly granted by Vestas in writing and subject to applicable conditions. Vestas disclaims all warranties except as expressly granted by written agreement and is not responsible for unauthorized uses, for which it may pursue legal remedies against responsible parties.

Original Instruction: T05 0067-7060 VER 00

T05 0067-7060 Ver 00 - Approved - Exported from DMS: 2017-06-23 by THGAF

Original Instruction: T05 0067-7060 VER 00

Table of contents

1 Introduction **5**
2 General Description **6**
3 Mechanical Design **7**
3.1 Rotor 7
3.2 Blades 7
3.3 Blade Bearing 8
3.4 Pitch System 8
3.5 Hub 8
3.6 Main Shaft 8
3.7 Main Bearing Housing 9
3.8 Main Bearing 9
3.9 Gearbox 9
3.10 Generator Bearings 9
3.11 High-Speed Shaft Coupling 10
3.12 Yaw System 10
3.13 Crane 10
3.14 Towers 10
3.15 Nacelle Bedplate and Cover 11
3.16 Thermal Conditioning System 11
3.16.1 Generator and Converter Cooling 12
3.16.2 Gearbox and Hydraulic Cooling 12
3.16.3 Transformer Cooling 12
3.16.4 Nacelle Cooling 12
3.16.5 Optional Air Intake Hatches 12
4 Electrical Design **12**
4.1 Generator 12
4.2 Converter 13
4.3 HV Transformer 13
4.3.1 Ecodesign - IEC 50 Hz/60 Hz version 14
4.4 HV Cables 15
4.5 HV Switchgear 16
4.5.1 IEC 50/60Hz version 18
4.5.2 IEEE 60Hz version 18
4.6 AUX System 19
4.7 Wind Sensors 19
4.8 Vestas Multi Processor (VMP) Controller 19
4.9 Uninterruptible Power Supply (UPS) 20
5 Turbine Protection Systems **21**
5.1 Braking Concept 21
5.2 Short Circuit Protections 21
5.3 Overspeed Protection 21
5.4 Arc Detection 22
5.5 Smoke Detection 22
5.6 Lightning Protection of Blades, Nacelle, Hub and Tower 22
5.7 EMC 22
5.8 Earthing 23
5.9 Corrosion Protection 23
6 Safety **23**
6.1 Access 24
6.2 Escape 24
6.3 Rooms/Working Areas 24
6.4 Floors, Platforms, Standing, and Working Places 24

T05 0067-7060 Ver 00 - Approved - Exported from DMS: 2017-06-23 by THGAF

6.5 Service Lift ... 24
6.6 Climbing Facilities ... 24
6.7 Moving Parts, Guards, and Blocking Devices ... 24
6.8 Lights ... 25
6.9 Emergency Stop ... 25
6.10 Power Disconnection ... 25
6.11 Fire Protection/First Aid ... 25
6.12 Warning Signs ... 25
6.13 Manuals and Warnings ... 25
7 Environment ... 25
7.1 Chemicals ... 25
8 Design Codes ... 26
8.1 Design Codes – Structural Design ... 26
9 Colours ... 26
9.1 Nacelle Colour ... 26
9.2 *Tower Colour* ... 27
9.3 Blade Colour ... 27
10 Operational Envelope and Performance Guidelines ... 27
10.1 Climate and Site Conditions ... 27
10.2 Operational Envelope – Temperature and Altitude ... 27
10.3 Operational Envelope – Temperature and Altitude ... 28
10.4 Operational Envelope – Grid Connection ... 29
10.5 Operational Envelope – Reactive Power Capability in 4.0 MW Mode 0 ... 30
10.6 Operational Envelope – Reactive Power Capability in 4.0 MW Reactive Power Optimized Mode (QO1) ... 31
10.7 Operational Envelope – Reactive Power Capability in 4.2 MW Power Optimized Mode (PO1) ... 32
10.8 Performance – Fault Ride Through ... 33
10.9 Performance – Reactive Current Contribution ... 33
10.9.1 Symmetrical Reactive Current Contribution ... 34
10.9.2 Asymmetrical Reactive Current Contribution ... 34
10.10 Performance – Multiple Voltage Dips ... 34
10.11 Performance – Active and Reactive Power Control ... 34
10.12 Performance – Voltage Control ... 35
10.13 Performance – Frequency Control ... 35
10.14 Distortion – Immunity ... 35
10.15 Main Contributors to Own Consumption ... 35
11 Drawings ... 36
11.1 Structural Design – Illustration of Outer Dimensions ... 36
11.2 Structural Design – Side View Drawing ... 36
12 General Reservations, Notes and Disclaimers ... 37

Original Instruction: T05 0067-7060 VER 00

T05 0067-7060 Ver 00 - Approved - Exported from DMS: 2017-06-23 by THGAF

Recipient acknowledges that (i) this General Description is provided for recipient's information only, and, does not create or constitute a warranty, guarantee, promise, commitment, or other representation (Commitment) by Vestas Wind Systems or any of its affiliated or subsidiary companies (Vestas), all of which are disclaimed by Vestas and (ii) any and all Commitments by Vestas to recipient as to this general description (or any of the contents herein) are to be contained exclusively in signed written contracts between recipient and Vestas, and not within this document.

See general reservations, notes and disclaimers (including, section 12, p. 37) to this general description.

Original Instruction: T05 0067-7060 VER 00

T05 0067-7060 Ver 00 - Approved - Exported from DMS: 2017-06-23 by THGAF

Original Instruction: T05 0067-7060 VER 00

1 Introduction

The 4MW Platform wind turbine configurations covered by this General Description are listed below with designations according to IEC61400-22.

DIBt 2012 wind classes are also listed where applicable.

Please refer to the Performance Specification for the relevant turbine variant for full wind class definition.

This General Description contains data and descriptions common among the platform variants.

The variant specific performance can be found in the Performance Specifications for the turbine variant and operational mode required.

Turbine Type Class	Turbine Type | Operating Mode
V117-4.0/4.2 MW Strong Wind	V117-4.0 MW IEC IB / IEC IIA 50/60 Hz | Mode 0
	V117-4.0 MW IEC IB / IEC IIA 50/60 Hz | Reactive Power Optimized Mode (QO1)
	V117-4.2 MW IEC S / IEC IIA 50/60 Hz | Power Optimized Mode (PO1)
	V117-3.8 MW IEC IB / IEC IIA 50/60 Hz | Load Optimized Mode (LO1)
	V117-3.6/3.x MW IEC IB / IEC IIA+ 50/60 Hz | Load Optimized Mode (LO2)
V117-4.0/4.2 MW Typhoon	V117-4.0 MW IEC IB-T / IEC IIA-T 50/60 Hz | Mode 0
	V117-4.0 MW IEC IB-T / IEC IIA-T 50/60 Hz | Reactive Power Optim. Mode (QO1)
	V117-4.2 MW IEC S-T / IEC IIA-T 50/60 Hz | Power Optimized Mode (PO1)
	V117-3.8 MW IEC IB-T / IEC IIA-T 50/60 Hz | Load Optimized Mode (LO1)
	V117-3.6/3.x MW IEC IB-T / IEC IIA+-T 50/60 Hz | Load Optimized Mode (LO2)
V136-4.0/4.2 MW	V136-4.0 MW IEC IIB / IEC S 50/60 Hz | Mode 0
	V136-4.0 MW IEC IIB / IEC S 50/60 Hz | Reactive Power Optim. Mode (QO1)
	V136-4.2 MW IEC S 50/60 Hz | Power Optimized Mode (PO1)
	V136-3.8 MW IEC IIB / IEC S 50/60 Hz | Load Optimized Mode (LO1)
	V136-3.6 MW IEC IIB / S 50/60 Hz | Load Optimized Mode (LO2)
	V136-4.0 MW DIBt S 50 Hz | Mode 0
	V136-4.0 MW DIBt S 50 Hz | Reactive Power Optimized Mode (QO1)
	V136-4.2 MW DIBt S 50 Hz | Power Optimized Mode (PO1)
	V136-3.8 MW DIBt S 50 Hz | Load Optimized Mode (LO1)
	V136-3.6 MW DIBt S 50 Hz | Load Optimized Mode (LO2)
V150-4.0/4.2 MW	V150-4.0 MW IEC IIIB / IEC S 50/60 Hz | Mode 0
	V150-4.0 MW IEC IIIB / IEC S 50/60 Hz | Reactive Power Optim. Mode (QO1)
	V150-4.2 MW IEC S 50/60 Hz | Power Optimized Mode (PO1)
	V150-3.8 MW IEC IIIB / IEC S 50/60 Hz | Load Optimized Mode (LO1)
	V150-3.6 MW IEC IIIB / S 50/60 Hz | Load Optimized Mode (LO2)
	V150-4.0 MW DIBt S 50 Hz | Mode 0

T05 0067-7060 Ver 00 - Approved - Exported from DMS: 2017-06-23 by THGAF

Turbine Type Class	Turbine Type | Operating Mode
V150-4.0/4.2 MW (cont'd)	V150-4.0 MW DIBt S 50 Hz | Reactive Power Optimized Mode (QO1)
	V150-4.2 MW DIBt S 50 Hz | Power Optimized Mode (PO1)
	V150-3.8 MW DIBt S 50 Hz | Load Optimized Mode (LO1)
	V150-3.6 MW DIBt S 50 Hz | Load Optimized Mode (LO2)

Table 1-1: 4MW Platform turbine configurations covered.

2 General Description

Vestas 4MW Platform comprises a family of wind turbines sharing a common design basis.

The 4MW Platform family of wind turbines includes V105-3.45/3.6 MW, V112-3.45/3.6 MW, V117-3.45/3.6 MW, V126-3.45 MW LTq, V126-3.45/3.6 MW HTq, V136-3.45/3.6 MW, V117-4.0/4.2 MW Strong Wind, V117-4.0/4.2 MW Typhoon, V136-4.0/4.2 MW and V150-4.0/4.2 MW.

For V105-3.45/3.6 MW, V112-3.45/3.6 MW, V117-3.45/3.6 MW, V126-3.45 MW LTq, V126-3.45/3.6 MW HTq and V136-3.45/3.6 MW, please refer to General Description 0053-3707.

This General Description only applies to V117-4.0/4.2 MW Strong Wind, V117-4.0/4.2 MW Typhoon, V136-4.0/4.2 MW and V150-4.0/4.2 MW.

These turbines are pitch regulated upwind turbines with active yaw and a three-blade rotor.

The turbines covered in this General Description are equipped with rotor with diameters residing in the range 117 m to 150 m and a rated output power of 4.0 MW.

A 4.0 MW Reactive Power Optimized Mode (QO1) is available for all variants.

A 4.2 MW Power Optimized Mode (PO1) is available for all variants.

Also, a 3.8 MW Load Optimized Mode (LO1) and a 3.6 MW Load Optimized Mode (LO2) is available for all variants. However, for V117, the LO2 power rating for the high turbulence intensity IEC 2A+ design climate is not yet fixed.

The wind turbine family utilises the OptiTip® concept and a power system based on an induction generator and full-scale converter. With these features, the wind turbine is able to operate the rotor at variable speed and thereby maintain the power output at or near rated power even in high wind speed. At low wind speed, the OptiTip® concept and the power system work together to maximise the power output by operating at the optimal rotor speed and pitch angle.

Operating the wind turbine in 4.0 MW Reactive Power Optimized Mode (QO1) is achieved by applying an extended ambient temperature derate strategy compared with 4.0 MW Mode 0 operation.

Original Instruction: T05 0067-7060 VER 00

T05 0067-7060 Ver 00 - Approved - Exported from DMS: 2017-06-23 by THGAF

Original Instruction: T05 0067-7060 VER 00

Operating the wind turbine in 4.2 MW Power Optimized Mode (PO1) is achieved by applying an extended ambient temperature derate strategy and reduced reactive power capability compared with 4.0 MW Mode 0 operation.

3 Mechanical Design

3.1 Rotor

The wind turbine is equipped with a rotor consisting of three blades and a hub. The blades are controlled by the microprocessor pitch control system OptiTip®. Based on the prevailing wind conditions, the blades are continuously positioned to optimise the pitch angle.

Rotor	V117	V136	V150
Diameter	117 m	136 m	150 m
Swept Area	10751 m^2	14527 m^2	17671 m^2
Speed, Dynamic Operation Range	[redacted]		
Rotational *Direction*	Clockwise (front view)		
Orientation	Upwind		
Tilt	[redacted]		
Hub Coning	[redacted]		
No. of Blades	3		
Aerodynamic Brakes	Full feathering		

Table 3-1: Rotor data

3.2 Blades

The blades are made of carbon and fibreglass and consist of two airfoil shells bonded to a supporting beam or with embedded structure.

Blades	V117	V136	V150
Type Description	Airfoil shells bonded to *supporting beam*	Prepreg or infused structural *airfoil shell*	Prepreg or infused structural *airfoil shell*
Blade Length	[redacted]		
Material	Fibreglass reinforced epoxy, carbon fibres and Solid Metal Tip (SMT)		
Blade Connection	Steel roots inserted		
Airfoils	High-lift profile		
Maximum Chord	[redacted]		
Chord at 90% blade radius	[redacted]		

Table 3-2: Blades data

T05 0067-7060 Ver 00 - Approved - Exported from DMS: 2017-06-23 by THGAF

Original Instruction: T05 0067-7060 VER 00

3.3 Blade Bearing

The blade bearings are double-row four-point contact ball bearings.

Blade Bearing	
Lubrication	[redacted]

Table 3-3: Blade bearing data

3.4 Pitch System

The turbine is equipped with a pitch system for each blade and a distributor block, all located in the hub. Each pitch system is connected to the distributor block with flexible hoses. The distributor block is connected to the pipes of the hydraulic rotating transfer unit in the hub by means of three hoses (pressure line, return line and drain line).

Each pitch system consists of a hydraulic cylinder mounted to the hub and a piston rod mounted to the blade bearing via a torque arm shaft. Valves facilitating operation of the pitch cylinder are installed on a pitch block bolted directly onto the cylinder.

Pitch System	
Type	Hydraulic
Number	1 per blade
Range	[redacted]

Table 3-4: Pitch system data

Hydraulic System	
Main Pump	Two redundant internal-gear oil pumps
Pressure	[redacted]
Filtration	[redacted]

Table 3-5: Hydraulic system data.

3.5 Hub

The hub supports the three blades and transfers the reaction loads to the main bearing and the torque to the gearbox. The hub structure also supports blade bearings and pitch cylinders.

Hub	
Type	Cast ball shell hub
Material	Cast iron

Table 3-6: Hub data

3.6 Main Shaft

The main shaft transfers the reaction forces to the main bearing and the torque to the gearbox.

T05 0067-7060 Ver 00 - Approved - Exported from DMS: 2017-06-23 by THGAF

Original Instruction: T05 0067-7060 VER 00

Main Shaft	
Type Description	Hollow shaft
Material	Cast iron or forged steel

Table 3-7: Main shaft data

3.7 Main Bearing Housing

The main bearing housing covers the main bearing and is the first connection point for the drive train system to the bedplate.

Main Bearing Housing	
Material	Cast iron

Table 3-8: Main bearing housing data

3.8 Main Bearing

The main bearing carries all thrust loads.

Main Bearing	
Type	[redacted]
Lubrication	[redacted]

Table 3-9: Main bearing data

3.9 Gearbox

The main gear converts the low-speed rotation of the rotor to high-speed generator rotation.

The disc brake is mounted on the high-speed shaft. The gearbox lubrication system is a pressure-fed system.

Gearbox	
Type	Planetary stages + one helical stage
Gear House Material	Cast
Lubrication System	Pressure oil lubrication
Backup Lubrication System	[redacted]
Total Gear Oil Volume	[redacted]
Oil Cleanliness Codes	[redacted]
Shaft Seals	[redacted]

Table 3-10: Gearbox data

3.10 Generator Bearings

The bearings are grease lubricated and grease is supplied continuously from an automatic lubrication unit.

T05 0067-7060 Ver 00 - Approved - Exported from DMS: 2017-06-23 by THGAF

Original Instruction: T05 0067-7060 VER 00

3.11 High-Speed Shaft Coupling

The coupling transmits the torque of the gearbox high-speed output shaft to the generator input shaft.

The coupling consists of two 4-link laminate packages and a fibreglass intermediate tube with two metal flanges.

The coupling is fitted to two-armed hubs on the brake disc and the generator hub.

3.12 Yaw System

The yaw system is an active system based on a robust pre-tensioned plain yaw-bearing concept with PETP as friction material.

Yaw System	
Type	Plain bearing system
Material	Forged yaw ring heat-treated. Plain bearings PETP
Yawing Speed (50 Hz)	[redacted]
Yawing Speed (60 Hz)	[redacted]

Table 3-11: Yaw system data

Yaw Gear	
Type	Multiple stages geared
Ratio Total	[redacted]
Rotational Speed at Full Load	[redacted]

Table 3-12: Yaw gear data

3.13 Crane

The nacelle houses the internal safe working load (SWL) service crane. The crane is a single system hoist.

Crane	
Lifting Capacity	[redacted]

Table 3-13: Crane data

3.14 Towers

Tubular towers with flange connections, certified according to relevant type approvals, are available in different standard heights. The towers are designed with the majority of internal welded connections replaced by magnet supports to create a predominantly smooth-walled tower.

Magnets provide load support in a horizontal direction and internals, such as platforms, ladders, etc., are supported vertically (that is, in the gravitational direction) by a mechanical connection. The smooth tower design reduces the required steel thickness, rendering the tower lighter compared to one with all internals welded to the tower shells.

T05 0067-7060 Ver 00 - Approved - Exported from DMS: 2017-06-23 by THGAF

Original Instruction: T05 0067-7060 VER 00

Available hub heights are listed in the Performance Specification for each turbine variant. Designated hub heights include a distance from the foundation section to the ground level of approximately 0.2 m depending on the thickness of the bottom flange and a distance from tower top flange to centre of the hub of 2.2 m.

Towers	
Type	Cylindrical/conical tubular

Table 3-14: Tower structure data

3.15 Nacelle Bedplate and Cover

The nacelle cover is made of fibreglass. Hatches are positioned in the floor for lowering or hoisting equipment to the nacelle and evacuation of personnel. The roof section is equipped with wind sensors and skylights.

The skylights can be opened from inside the nacelle to access the roof and from outside to access the nacelle. Access from the tower to the nacelle is through the yaw system.

The nacelle bedplate is in two parts and consists of a cast iron front part and a girder structure rear part. The front of the nacelle bedplate is the foundation for the drive train and transmits forces from the rotor to the tower through the yaw system. The bottom surface is machined and connected to the yaw bearing and the yaw gears are bolted to the front nacelle bedplate.

The crane girders are attached to the top structure. The lower beams of the girder structure are connected at the rear end. The rear part of the bedplate serves as the foundation for controller panels, the cooling system and transformer. The nacelle cover is installed on the nacelle bedplate.

Type Description	Material
Nacelle Cover	GRP
Bedplate Front	Cast iron
Bedplate Rear	Girder structure

Table 3-15: Nacelle bedplate and cover data

3.16 Thermal Conditioning System

The thermal conditioning system consists of a few robust components:

- The Vestas CoolerTop® located on top of the rear end of the nacelle. The CoolerTop® is a free flow cooler, thus ensuring that there are no electrical components in the thermal conditioning system located outside the nacelle.
- The CoolerTop® comes as standard in a "naked" form, with no side cover panels. Side cover panels are available as an option.
- The Liquid Cooling System, which serves the gearbox, hydraulic systems, generator and converter is driven by an electrical pumping system.
- The transformer forced air cooling comprised of an electrical fan.

T05 0067-7060 Ver 00 - Approved - Exported from DMS: 2017-06-23 by THGAF

Original Instruction: T05 0067-7060 VER 00

3.16.1 Generator and Converter Cooling

The generator and converter cooling systems operate in parallel. A dynamic flow valve mounted in the generator cooling circuit divides the cooling liquid flow. The cooling liquid removes heat from the generator and converter unit using a free-air flow radiator placed on the top of the nacelle. In addition to the generator, converter unit and radiator, the circulation system includes an electrical pump and a three-way thermostatic valve.

3.16.2 Gearbox and Hydraulic Cooling

The gearbox and hydraulic cooling systems are coupled in parallel. A dynamic flow valve mounted in the gearbox cooling circuit divides the cooling flow. The cooling liquid removes heat from the gearbox and the hydraulic power unit through heat exchangers and a free-air flow radiator placed on the top of the nacelle. In addition to the heat exchangers and the radiator, the circulation system includes an electrical pump and a three-way thermostatic valve.

3.16.3 Transformer Cooling

The transformer is equipped with forced-air cooling. The ventilator system consists of a central fan, located below the converter and an air duct leading the air to locations beneath and between the high voltage and low voltage windings of the transformer.

3.16.4 Nacelle Cooling

Hot air generated by mechanical and electrical equipment is dissipated from the nacelle by a fan system located in the nacelle.

3.16.5 Optional Air Intake Hatches

Specific air intakes in the nacelle can optionally be fitted with hatches which can be operated as a part of the thermal control strategy. In case of lost grid to the turbine, the hatches will automatically be closed.

4 Electrical Design

4.1 Generator

The generator is a three-phase asynchronous induction generator with cage rotor that is connected to the grid through a full-scale converter. The generator housing allows the circulation of cooling air within the stator and rotor. The air-to-water heat exchange occurs in an external heat exchanger.

Generator
[redacted]

T05 0067-7060 Ver 00 - Approved - Exported from DMS: 2017-06-23 by THGAF

Generator	
[redacted]	

Table 4-1: Generator data

4.2 Converter

The converter is a full-scale converter system controlling both the generator and the power quality delivered to the grid. The converter consists of 3 machine-side converter units and 3 line-side converter units operating in parallel with a common controller.

The converter controls conversion of variable frequency AC power from the generator into fixed frequency AC power with desired active and reactive power levels (and other grid connection parameters) suitable for the grid.

The converter is located in the nacelle and has a grid side voltage rating of 720 V. The generator side voltage rating is up to 750 V dependent on generator speed.

Converter	
Rated Apparent Power [S_N]	[redacted]
Rated Grid Voltage	
Rated Generator Voltage	
Rated Grid Current	
Rated Generator Current	
Enclosure	

Table 4-2: Converter data

4.3 HV Transformer

The step-up HV transformer is located in a separate locked room in the back of the nacelle.

The transformer is a three-phase, two-winding, dry-type transformer that is self-extinguishing. The windings are delta-connected on the high-voltage side unless otherwise specified.

Original Instruction: T05 0067-7060 VER 00

T05 0067-7060 Ver 00 - Approved - Exported from DMS: 2017-06-23 by THGAF

Original Instruction: T05 0067-7060 VER 00

The transformer comes in different versions depending on the market where it is intended to be installed.

- For 50 and 60 Hz regions the transformer is as default designed according to IEC standards, but also complying to European Ecodesign regulation No 548/2014 set by the European Commission. Refer to Table 4-3.

4.3.1 Ecodesign - IEC 50 Hz/60 Hz version

Transformer	
Type description	[redacted]
Basic layout	
Applied standards	
Cooling method	
Rated power	
Rated voltage, turbine side	
U_m 1.1kV	
Rated voltage, grid side	
U_m 24.0kV	
U_m 36.0kV	
U_m 40.5kV	
Insulation level AC / LI / LIC	
U_m 1.1kV	
U_m 24.0kV	
U_m 36.0kV	
U_m 40.5kV	
Off-circuit tap changer	
Frequency	
Vector group	
Peak Efficiency Index (PEI) [2]	
U_m 24.0kV	
U_m 36.0kV	
U_m 40.5kV	
No-load loss [2]	
U_m 24.0kV	
U_m 36.0kV	
U_m 40.5kV	
Load loss @ power consumption HV, 120°C	
U_m 24.0kV	
U_m 36.0kV	
U_m 40.5kV	
No-load reactive power [3]	
Full load reactive power [3]	
No-load current [3]	
Positive sequence short-circuit impedance @ rated power, 120°C [4]	
Positive sequence short-circuit	

T05 0067-7060 Ver 00 - Approved - Exported from DMS: 2017-06-23 by THGAF

Transformer	
resistance@ rated power, 120°C [3]	[redacted]
Zero sequence short-circuit impedance@ rated power, 120°C [3]	
Zero sequence short-circuit resistance@ rated power, 120°C [3]	
Inrush peak current [3]	
Dyn5	
YNyn0	
Half crest time [3]	
Sound power level	
Average temperature rise at max altitude	
Max altitude [5]	
Insulation class	
Environmental class	
Climatic class	
Fire behaviour class	
Corrosion class	
Weight	
Temperature monitoring	
Overvoltage protection	
Temporary earthing	

Table 4-3: Transformer data for Ecodesign IEC 50 Hz/60 Hz version.

NOTE [redacted]

4.4 HV Cables

The high-voltage cable runs from the transformer in the nacelle down the tower to the HV switchgear located at the bottom of the tower. The high-voltage cable is a four-core, rubber-insulated, halogen-free, high-voltage cable.

Original Instruction: T05 0067-7060 VER 00

T05 0067-7060 Ver 00 - Approved - Exported from DMS: 2017-06-23 by THGAF

Original Instruction: T05 0067-7060 VER 00

HV Cables	
High-Voltage Cable Insulation Compound	Improved ethylene-propylene (EP) based material-EPR or high modulus or hard grade ethylene-propylene rubber-HEPR
Pre-terminated	HV termination in transformer end. T-Connector Type-C in switchgear end.
Maximum Voltage	[redacted]
Conductor Cross Sections	[redacted]

Table 4-4: HV cables data

4.5 HV Switchgear

A gas insulated switchgear is installed in the bottom of the tower as an integrated part of the turbine. Its controls are integrated with the turbine safety system, which monitors the condition of the switchgear and high voltage safety related devices in the turbine. This system is named 'Ready to Protect' and ensures all protection devices are operational, whenever high voltage components in the turbine are energised. To ensure that the switchgear is always ready to trip, it is equipped with redundant trip circuits consisting of an active trip coil and an undervoltage trip coil.

In case of grid outage the circuit breaker will disconnect the turbine from the grid after an adjustable time.

When grid returns, all relevant protection devices will automatically be powered up via UPS.

When all the protection devices are operational, the circuit breaker will re-close after an adjustable time. The re-close functionality can furthermore be used to implement a sequential energization of a wind park, in order to avoid simultaneous inrush currents from all turbines once grid returns after an outage.

In case the circuit breaker has tripped due to a fault detection, the circuit breaker will be blocked for re-connection until a manual reset is performed.

In order to avoid unauthorized access to the transformer room during live condition, the earthing switch of the circuit breaker, contains a trapped-key interlock system with its counterpart installed on the access door to the transformer room.

The switchgear is available in three variants with increasing features, see Table 4-5. Beside the increase in features, the switchgear can be configured depending on the number of grid cables planned to enter the individual turbine. The design of the switchgear solution is optimized such grid cables can be connected to the switchgear even before the tower is installed and still maintain its protection toward weather conditions and internal condensation due to a gas tight packing.

The switchgear is available in an IEC version and in an IEEE version. The IEEE version is however only available in the highest voltage class. The electrical parameters of the switchgear are seen in Table 4-6 for the IEC version and in Table 4-7 for the IEEE version.

T05 0067-7060 Ver 00 - Approved - Exported from DMS: 2017-06-23 by THGAF

HV Switchgear			
Variant	**Basic**	**Streamline**	**Standard**
IEC standards	○	⊙	⊙
IEEE standards	⊙	○	⊙
Vacuum circuit breaker panel	⊙	⊙	⊙
Overcurrent, short-circuit and earth fault protection	⊙	⊙	⊙
Disconnector / earthing switch in circuit breaker panel	⊙	⊙	⊙
Voltage Presence Indicator System for circuit breaker	⊙	⊙	⊙
Voltage Presence Indicator System for grid cables	⊙	⊙	⊙
Double grid cable connection	⊙	⊙	⊙
Triple grid cable connection	⊙	○	○
Preconfigured relay settings	⊙	⊙	⊙
Turbine safety system integration	⊙	⊙	⊙
Redundant trip coil circuits	⊙	⊙	⊙
Trip coil supervision	⊙	⊙	⊙
Pendant remote control from outside of tower	⊙	⊙	⊙
Sequential energization	⊙	⊙	⊙
Reclose blocking function	⊙	⊙	⊙
Heating elements	⊙	⊙	⊙
Trapped-key interlock system for circuit breaker panel	⊙	⊙	⊙
Motor operation of circuit breaker	⊙	⊙	⊙
Cable panel for grid cables (configurable)	○	⊙	⊙
Switch disconnector panels for grid cables – max three panels (configurable)	○	⊙	⊙
Earthing switch for grid cables	○	⊙	⊙
Internal arc classification	○	⊙	⊙
Supervision on MCB's	○	⊙	⊙
Motor operation of switch disconnector	○	○	⊙
SCADA operation and feedback of circuit breaker	○	○	⊙
SCADA operation and feedback of switch disconnector	○	○	⊙

Table 4-5: HV switchgear variants and features

Original Instruction: T05 0067-7060 VER 00

T05 0067-7060 Ver 00 - Approved - Exported from DMS: 2017-06-23 by THGAF

4.5.1 IEC 50/60Hz version

HV Switchgear	
Type description	[redacted]
Applied standards	
Insulation medium	
Rated voltage	
U_r 24.0kV	
U_r 36.0kV	
U_r 40.5kV	
Rated insulation level AC // LI Common value / across isolation distance	
U_r 24.0kV	
U_r 36.0kV	
U_r 40.5kV	
Rated frequency	
Rated normal current	
Rated Short-time withstand current	
U_r 24.0kV	
U_r 36.0kV	
U_r 40.5kV	
Rated *peak withstand current* 50 / 60 Hz	
U_r 24.0kV	
U_r 36.0kV	
U_r 40.5kV	
Rated duration of short-circuit	
Internal arc classification (option)	
U_r 24.0kV	
U_r 36.0kV	
U_r 40.5kV	
Connection interface	
Loss of service continuity category	
Ingress protection	
Gas tank	
Enclosure	
LV cabinet	
Corrosion class	

Table 4-6: HV switchgear data for IEC version

4.5.2 IEEE 60Hz version

HV Switchgear	
Type description	[redacted]
Applied standards	
Insulation medium	
Rated voltage	
U_r 38.0kV	

Original Instruction: T05 0067-7060 VER 00

T05 0067-7060 Ver 00 - Approved - Exported from DMS: 2017-06-23 by THGAF

HV Switchgear	
Rated insulation level AC / LI	[redacted]
Rated frequency	
Rated normal current	
Rated Short-time withstand current	
Rated peak withstand current	
Rated duration of short-circuit	
Internal arc classification (option)	
Connection interface grid cables	
Ingress protection	
Gas tank	
Enclosure	
LV cabinet	
Corrosion class	

Table 4-7: HV switchgear data for IEEE version

4.6 AUX System

The AUX system is supplied from a separate 650/400/230 V transformer located in the nacelle inside the converter cabinet. All motors, pumps, fans and heaters are supplied from this system.

230 V consumers are generally supplied from a 400/230 V transformer located in the tower base. Internal heating and ventilation of cabinets as well as specific option 230 V consumers are supplied from the auxiliary transformer in the converter cabinet.

Power Sockets	
Single Phase (Nacelle)	230 V (16 A) (standard) 110 V (16 A) (option) 2 x 55 V (16 A) (option)
Single Phase (Tower Platforms)	230 V (10 A) (standard) 110 V (16 A) (option) 2 x 55 V (16 A) (option)
Three Phase (Nacelle and Tower Base)	3 x 400 V (16 A)

Table 4-8: AUX system data

4.7 Wind Sensors

The turbine is either equipped with two ultrasonic wind sensors or optional one ultrasonic wind sensor and one mechanical wind vane and anemometer. The sensors have built-in heaters to minimise interference from ice and snow. The wind sensors are redundant, and the turbine is able to operate with one sensor only.

4.8 Vestas Multi Processor (VMP) Controller

The turbine is controlled and monitored by the VMP8000 control system.

Original Instruction: T05 0067-7060 VER 00

T05 0067-7060 Ver 00 - Approved - Exported from DMS: 2017-06-23 by THGAF

Original Instruction: T05 0067-7060 VER 00

VMP8000 is a multiprocessor control system comprised of main controller, distributed control nodes, distributed IO nodes and ethernet switches and other network equipment. The main controller is placed in the tower bottom of the turbine. It runs the control algorithms of the turbine, as well as all IO communication.

The communications network is a time triggered Ethernet network (TTEthernet).

The VMP8000 control system serves the following main functions:

- Monitoring and supervision of overall operation.
- Synchronizing of the generator to the grid during connection sequence.
- Operating the wind turbine during various fault situations.
- Automatic yawing of the nacelle.
- OptiTip® - blade pitch control.
- Reactive power control and variable speed operation.
- Noise emission control.
- Monitoring of ambient conditions.
- Monitoring of the grid.
- Monitoring of the smoke detection system.

4.9 Uninterruptible Power Supply (UPS)

During grid outage, an UPS system will ensure power supply for specific components.

The UPS system is built by 3 subsystems:

1. 230V AC UPS for all power backup to nacelle and hub control systems
2. 24V DC UPS for power backup to tower base control systems and optional SCADA Power Plant Controller.
3. 230V AC UPS for power backup to internal lights in tower and nacelle. Internal light in the hub is fed from built-in batteries in the light armature.

UPS		
Backup Time	**Standard**	**Optional**
Control System* **(230V AC and 24V DC UPS)**	15 min	Up to 400 min**
Internal Lights **(230V AC UPS)**	30 min	60 min***
Optional SCADA Power Plant Controller **(24V DC UPS)**	N/A	48 hours****

Table 4-9: UPS data

T05 0067-7060 Ver 00 - Approved - Exported from DMS: 2017-06-23 by THGAF

**The control system includes: the turbine controller (VMP8000), HV switchgear functions, and remote control system.*

***Requires upgrade of the 230V UPS for control system with extra batteries.*

****Requires upgrade of the 230V UPS for internal light with extra batteries.*

*****Requires upgrade of the 24V DC UPS with extra batteries.*

NOTE For alternative backup times, consult Vestas.

5 Turbine Protection Systems

5.1 Braking Concept

The main brake on the turbine is aerodynamic. Stopping the turbine is done by full feathering the three blades (individually turning each blade). Each blade has a hydraulic accumulator to supply power for turning the blade.

In addition, there is a mechanical disc brake on the high-speed shaft of the gearbox with a dedicated hydraulic system. The mechanical brake is only used as a parking brake and when activating the emergency stop buttons.

5.2 Short Circuit Protections

Breakers	Breaker for Aux. Power.	Breaker 1 for Converter Modules	Breaker 2 for Converter Modules
Breaking Capacity Icu, Ics	TBD	TBD	TBD
Making Capacity Icm	TBD	TBD	TBD

Table 5-1: Short circuit protection data

5.3 Overspeed Protection

The generator rpm and the main shaft rpm are registered by inductive sensors and calculated by the wind turbine controller to protect against overspeed and rotating errors.

The safety-related partition of the VMP8000 control system monitors the rotor rpm. In case of an overspeed situation, the safety-related partition of the VMP8000 control system activates the emergency feathered position (full feathering) of the three blades independently of the non-safety related partition of VMP8000 control system.

Overspeed Protection	
Sensors Type	Inductive
Trip Level (variant dependent)	[redacted]

Table 5-2: Overspeed protection data

Original Instruction: T05 0067-7060 VER 00

T05 0067-7060 Ver 00 - Approved - Exported from DMS: 2017-06-23 by THGAF

Original Instruction: T05 0067-7060 VER 00

5.4 Arc Detection

The turbine is equipped with an Arc Detection system including multiple optical arc detection sensors placed in the HV transformer compartment and the converter cabinet. The Arc Detection system is connected to the turbine safety system ensuring immediate opening of the HV switchgear if an arc is detected.

5.5 Smoke Detection

The turbine is equipped with a Smoke Detection system including multiple smoke detection sensors placed in the nacelle (above the disc brake), in the transformer compartment, in main electrical cabinets in the nacelle and above the HV switchgear in the tower base. The Smoke Detection system is connected to the turbine safety system ensuring immediate opening of the HV switchgear if smoke is detected.

5.6 Lightning Protection of Blades, Nacelle, Hub and Tower

The Lightning Protection System (LPS) helps protect the wind turbine against the physical damage caused by lightning strikes. The LPS consists of five main parts:

- Lightning receptors. All lightning receptor surfaces on the blades are unpainted, excluding the Solid Metal Tips (SMT).
- Down conducting system (a system to conduct the lightning current down through the wind turbine to help avoid or minimise damage to the LPS itself or other parts of the wind turbine).
- Protection against overvoltage and overcurrent.
- Shielding against magnetic and electrical fields.
- Earthing system.

Lightning Protection Design Parameters			[redacted]
Current Peak Value	i_{max}	[kA]	
Impulse Charge	$Q_{impulse}$	[C]	
Long Duration Charge	Q_{long}	[C]	
Total Charge	Q_{total}	[C]	
Specific Energy	W/R	[MJ/Ω]	
Average Steepness	di/dt	[kA/μs]	

Table 5-3: Lightning protection design parameters

NOTE The Lightning Protection System is designed according to IEC standards (see section 8 Design Codes, p. 28).

5.7 EMC

The turbine and related equipment fulfils the EU Electromagnetic Compatibility (EMC) legislation:

T05 0067-7060 Ver 00 - Approved - Exported from DMS: 2017-06-23 by THGAF

- DIRECTIVE 2014/30/EU OF THE EUROPEAN PARLIAMENT AND OF THE COUNCIL of 26 February 2014 on the harmonisation of the laws of the Member States relating to electromagnetic compatibility.

5.8 Earthing

The Vestas Earthing System consists of a number of individual earthing electrodes interconnected as one joint earthing system.

The Vestas Earthing System includes the TN-system and the Lightning Protection System for each wind turbine. It works as an earthing system for the medium voltage distribution system within the wind farm.

The Vestas Earthing System is adapted for the different types of turbine foundations. A separate set of documents describe the earthing system in detail, depending on the type of foundation.

In terms of lightning protection of the wind turbine, Vestas has no separate requirements for a certain minimum resistance to remote earth (measured in ohms) for this system. The earthing for the lightning protection system is based on the design and construction of the Vestas Earthing System.

A primary part of the Vestas Earthing System is the main earth bonding bar placed where all cables enter the wind turbine. All earthing electrodes are connected to this main earth bonding bar. Additionally, equipotential connections are made to all cables entering or leaving the wind turbine.

Requirements in the Vestas Earthing System specifications and work descriptions are minimum requirements from Vestas and IEC. Local and national requirements, as well as project requirements, may require additional measures.

5.9 Corrosion Protection

Classification of corrosion protection is according to ISO 12944-2.

Corrosion Protection	External Areas	Internal Areas
Nacelle	C5-M	C3
Hub	C5-M	C3
Tower	C5-I	C3

Table 5-4: Corrosion protection data for nacelle, hub, and tower

6 Safety

The safety specifications in this section provide limited general information about the safety features of the turbine and are not a substitute for Buyer and its agents taking all appropriate safety precautions, including but not limited to (a) complying with all applicable safety, operation, maintenance, and service agreements, instructions, and requirements, (b) complying with all safety-related laws, regulations, and ordinances, and (c) conducting all appropriate safety training and education.

Original Instruction: T05 0067-7060 VER 00

T05 0067-7060 Ver 00 - Approved - Exported from DMS: 2017-06-23 by THGAF

Original Instruction: T05 0067-7060 VER 00

6.1 Access

Access to the turbine from the outside is through a door located at the entrance platform approximately 3 meter above ground level. The door is equipped with a lock. Access to the top platform in the tower is by a ladder or service lift. Access to the nacelle from the top platform is by ladder. Access to the transformer room in the nacelle is controlled with a lock. Unauthorised access to electrical switchboards and power panels in the turbine is prohibited according to IEC 60204-1 2006.

6.2 Escape

In addition to the normal access routes, alternative escape routes from the nacelle are through the crane hatch, from the spinner by opening the nose cone, or from the roof of the nacelle. Rescue equipment is placed in the nacelle.

The hatch in the roof can be opened from both the inside and outside. Escape from the service lift is by ladder.

An emergency response plan, placed in the turbine, describes evacuation and escape routes.

6.3 Rooms/Working Areas

The tower and nacelle are equipped with power sockets for electrical tools for service and maintenance of the turbine.

6.4 Floors, Platforms, Standing, and Working Places

All floors have anti-slip surfaces.

There is one floor per tower section.

Rest platforms are provided at intervals of 9 metres along the tower ladder between platforms.

Foot supports are placed in the turbine for maintenance and service purposes.

6.5 Service Lift

The turbine is delivered with a service lift installed as an option.

6.6 Climbing Facilities

A ladder with a fall arrest system (rigid rail) is installed through the tower.

There are anchor points in the tower, nacelle and hub, and on the roof for attaching fall arrest equipment (full-body harness). Over the crane hatch there is an anchor point for the emergency descent equipment. Anchor points are coloured yellow and are calculated and tested to 22.2 kN.

6.7 Moving Parts, Guards, and Blocking Devices

All moving parts in the nacelle are shielded.

The turbine is equipped with a rotor lock to block the rotor and drive train.

Blocking the pitch of the cylinder can be done with mechanical tools in the hub.

T05 0067-7060 Ver 00 - Approved - Exported from DMS: 2017-06-23 by THGAF

Original Instruction: T05 0067-7060 VER 00

6.8 Lights

The turbine is equipped with lights in the tower, nacelle and hub.

There is emergency light in case of the loss of electrical power.

6.9 Emergency Stop

There are emergency stop buttons in the nacelle, hub and bottom of the tower.

6.10 Power Disconnection

The turbine is equipped with breakers to allow for disconnection from all power sources during inspection or maintenance. The switches are marked with signs and are located in the nacelle and bottom of the tower.

6.11 Fire Protection/First Aid

A handheld 5-6 kg CO_2 fire extinguisher, first aid kit and fire blanket are required to be located in the nacelle during service and maintenance.

- A handheld 5-6 kg CO_2 fire extinguisher is required only during service and maintenance activities, unless a permanently mounted fire extinguisher located in the nacelle is mandatorily required by authorities.
- First aid kits are required only during service and maintenance activities.
- Fire blankets are required only during non-electrical hot work activities.

6.12 Warning Signs

Warning signs placed inside or on the turbine must be reviewed before operating or servicing the turbine.

6.13 Manuals and Warnings

The Vestas Corporate OH&S Manual and manuals for operation, maintenance and service of the turbine provide additional safety rules and information for operating, servicing or maintaining the turbine.

7 Environment

7.1 Chemicals

Chemicals used in the turbine are evaluated according to the Vestas Wind Systems A/S Environmental System certified according to ISO 14001:2004. The following chemicals are used in the turbine:

- Anti-freeze to help prevent the cooling system from freezing.
- Gear oil for lubricating the gearbox.
- Hydraulic oil to pitch the blades and operate the brake.
- Grease to lubricate bearings.
- Various cleaning agents and chemicals for maintenance of the turbine.

T05 0067-7060 Ver 00 - Approved - Exported from DMS: 2017-06-23 by THGAF

8 Design Codes

8.1 Design Codes – Structural Design

The turbine design has been developed and tested with regard to, but not limited to, the following main standards:

Design Codes	
Nacelle and Hub	IEC 61400-1 Edition 3 EN 50308
Tower	IEC 61400-1 Edition 3 Eurocode 3
Blades	DNV-OS-J102 IEC 1024-1 IEC 60721-2-4 IEC 61400 (Part 1, 12 and 23) IEC WT 01 IEC DEFU R25 ISO 2813 DS/EN ISO 12944-2
Gearbox	ISO 81400-4
Generator	IEC 60034
Transformer	IEC 60076-11, IEC 60076-16, CENELEC HD637 S1
Lightning Protection	IEC 62305-1: 2006 IEC 62305-3: 2006 IEC 62305-4: 2006 IEC 61400-24:2010
Rotating Electrical Machines	IEC 34
Safety of Machinery, Safety-related Parts of Control Systems	IEC 13849-1
Safety of Machinery – Electrical Equipment of Machines	IEC 60204-1

Table 8-1: Design codes

9 Colours

9.1 Nacelle Colour

Colour of Vestas Nacelles	
Standard Nacelle Colour	RAL 7035 (light grey)
Standard Logo	Vestas

Table 9-1: Colour, nacelle

Original Instruction: T05 0067-7060 VER 00

T05 0067-7060 Ver 00 - Approved - Exported from DMS: 2017-06-23 by THGAF

Original Instruction: T05 0067-7060 VER 00

9.2 Tower Colour

Colour of Vestas Tower Section		
	External:	**Internal:**
Standard Tower Colour	RAL 7035 (light grey)	RAL 9001 (cream white)

Table 9-2: Colour, tower

9.3 Blade Colour

Blade Colour	
Standard Blade Colour	RAL 7035 (light grey). All lightning receptor surfaces on the blades are unpainted, excluding the Solid Metal Tips (SMT).
Tip-End Colour Variants	RAL 2009 (traffic orange), RAL 3020 (traffic red)
Gloss	< 30% DS/EN ISO 2813

Table 9-3: Colour, blades

10 Operational Envelope and Performance Guidelines

Actual climate and site conditions have many variables and should be considered in evaluating actual turbine performance. The design and operating parameters set forth in this section do not constitute warranties, guarantees, or representations as to turbine performance at actual sites.

10.1 Climate and Site Conditions

Values refer to hub height:

Extreme Design Parameters	
Wind Climate	**All**
Ambient Temperature Interval (Standard Temperature Turbine)	-40° to +50°C

Table 10-1: Extreme design parameters

10.2 Operational Envelope – Temperature and Altitude

Values below refer to hub height and are determined by the sensors and control system of the turbine.

Operational Envelope – Temperature	
Ambient Temperature Interval (Standard Turbine)	-20° to +45°C
Ambient Temperature Interval (Low Temperature Turbine)	-30° to +45°C

Table 10-2: Operational envelope – temperature

T05 0067-7060 Ver 00 - Approved - Exported from DMS: 2017-06-23 by THGAF

[redacted]

10.3 Operational Envelope – Temperature and Altitude

Values below refer to hub height and are determined by the sensors and control system of the turbine. At ambient temperatures above the thresholds shown for each operating mode in Figure 10-1 below, the turbine will maintain derated production. [redacted]

[redacted]

Original Instruction: T05 0067-7060 VER 00

T05 0067-7060 Ver 00 - Approved - Exported from DMS: 2017-06-23 by THGAF

Original Instruction: T05 0067-7060 VER 00

10.4 Operational Envelope – Grid Connection

Operational Envelope – Grid Connection	
Nominal Phase Voltage	[redacted]
Nominal Frequency	
Maximum Frequency Gradient	
Maximum Negative Sequence Voltage	
Minimum Required Short Circuit Ratio at Turbine HV Connection	
Maximum Short Circuit Current Contribution	

Table 10-3: Operational envelope – grid connection

The generator and the converter will be disconnected if*:

Protection Settings	
Voltage Above 110%** of Nominal for 1800 Seconds	[redacted]
Voltage Above 116% of Nominal for 60 Seconds	
Voltage Above 125% of Nominal for 2 Seconds	
Voltage Above 136% of Nominal for 0.150 Seconds	
Voltage Below 90%** of Nominal for 180 Seconds (FRT)	
Voltage Below 85% of Nominal for 12 Seconds (FRT)	
Voltage Below 80% of Nominal for 4 Seconds (FRT)	
Frequency is Above 106% of Nominal for 0.2 Seconds	
Frequency is Below 94% of Nominal for 0.2 Seconds	

Table 10-4: Generator and converter disconnecting values

NOTE [redacted]

All protection settings are preliminary and subject to change.

T05 0067-7060 Ver 00 - Approved - Exported from DMS: 2017-06-23 by THGAF

10.5 Operational Envelope – Reactive Power Capability in 4.0 MW Mode 0

The turbine has a reactive power capability in 4.0 MW Mode 0 on the low voltage side of the HV transformer as illustrated in Figure 10-2:

[redacted]

Original Instruction: T05 0067-7060 VER 00

T05 0067-7060 Ver 00 - Approved - Exported from DMS: 2017-06-23 by THGAF

10.6 Operational Envelope – Reactive Power Capability in 4.0 MW Reactive Power Optimized Mode (QO1)

[redacted]

Original Instruction: T05 0067-7060 VER 00

T05 0067-7060 Ver 00 - Approved - Exported from DMS: 2017-06-23 by THGAF

10.7 Operational Envelope – Reactive Power Capability in 4.2 MW Power Optimized Mode (PO1)

The reactive power capability for the 4.2 MW Power Optimized Mode (PO1) is as illustrated in Figure 10-4:

[redacted]

Original Instruction: T05 0067-7060 VER 00

T05 0067-7060 Ver 00 - Approved - Exported from DMS: 2017-06-23 by THGAF

Original Instruction: T05 0067-7060 VER 00

10.8 Performance – Fault Ride Through

The turbine is equipped with a full-scale converter to gain better control of the wind turbine during grid faults. The turbine control system continues to run during grid faults.

The turbine is designed to stay connected during grid disturbances within the voltage tolerance curve as illustrated below:

[redacted]

NOTE All fault ride through capability values are preliminary and subject to change.

Power Recovery Time	
Power Recovery to 90% of Pre-Fault Level	[redacted]

Table 10-5: Power recovery time

10.9 Performance – Reactive Current Contribution

The reactive current contribution depends on whether the fault applied to the turbine is symmetrical or asymmetrical.

NOTE All reactive current contribution values are preliminary and subject to change.

T05 0067-7060 Ver 00 - Approved - Exported from DMS: 2017-06-23 by THGAF

Original Instruction: T05 0067-7060 VER 00

10.9.1 Symmetrical Reactive Current Contribution

During symmetrical voltage dips, the wind farm will inject reactive current to support the grid voltage. The reactive current injected is a function of the measured grid voltage.

[redacted]

10.9.2 Asymmetrical Reactive Current Contribution

[redacted]

10.10 Performance – Multiple Voltage Dips

[redacted]

10.11 Performance – Active and Reactive Power Control

The turbine is designed for control of active and reactive power via the VestasOnline® SCADA system.

Maximum Ramp Rates for External Control	
Active Power	[redacted]
Reactive Power	[redacted]

Table 10-6: Active/reactive power ramp rates (values are preliminary)

T05 0067-7060 Ver 00 - Approved - Exported from DMS: 2017-06-23 by THGAF

[redacted]

10.12 Performance – Voltage Control

The turbine is designed for integration with VestasOnline® voltage control by utilising the turbine reactive power capability.

10.13 Performance – Frequency Control

The turbine can be configured to perform frequency control by decreasing the output power as a linear function of the grid frequency (over frequency). Dead band and slope for the frequency control function are configurable.

10.14 Distortion – Immunity

[redacted]

10.15 Main Contributors to Own Consumption

The consumption of electrical power by the wind turbine is defined as the power used by the wind turbine when it is not providing energy to the grid. This is defined in the control system as Production Generator 0 (zero).

The components in Table 10-7 have the largest influence on the own consumption of the wind turbine (the average own consumption depends on the actual conditions, the climate, the wind turbine output, the cut-off hours, etc.).

The VMP8000 control system has a hibernate mode that reduces own consumption when possible. Similarly, cooling pumps may be turned off when the turbine idles.

Main contributors to Own Consumption	
Hydraulic Motor	[redacted]
Yaw Motors	
Water Heating	
Water Pumps	
Oil Heating	
Oil Pump for Gearbox Lubrication	
Controller Including Heating Elements for the Hydraulics and all Controllers	
HV Transformer No-load Loss	

Table 10-7: Main contributors to own consumption data (values are preliminary).

Original Instruction: T05 0067-7060 VER 00

T05 0067-7060 Ver 00 - Approved - Exported from DMS: 2017-06-23 by THGAF

11 Drawings

11.1 Structural Design – Illustration of Outer Dimensions

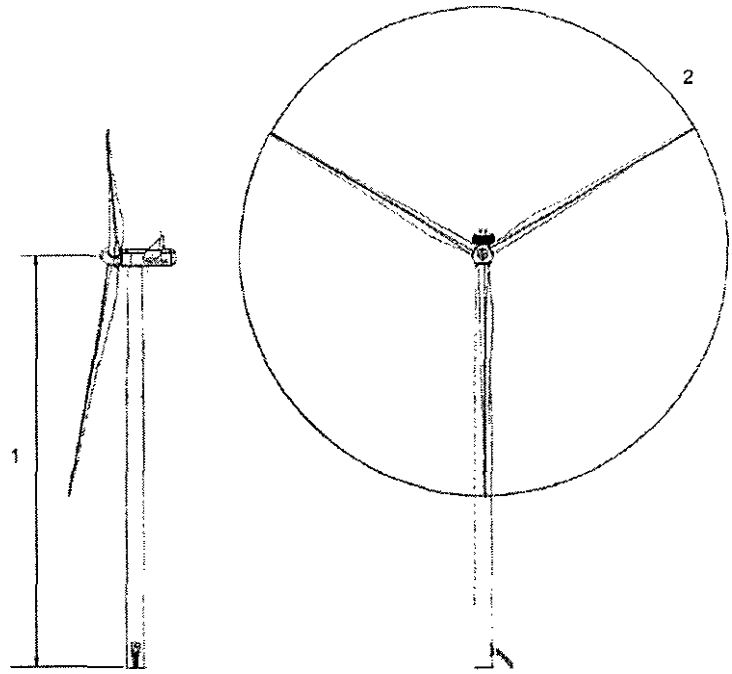

Figure 11-1: Illustration of outer dimensions – structure

1 Hub heights: See Performance Specification

2 Rotor diameter: 117-150 m

11.2 Structural Design – Side View Drawing

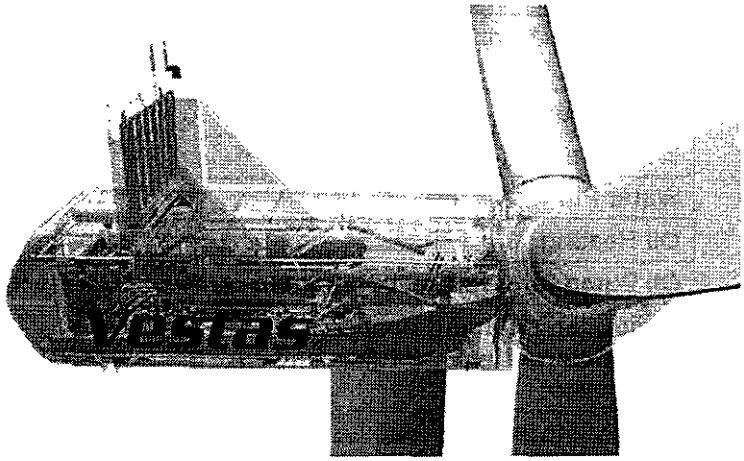

Figure 11-2: Side-view drawing

Original Instruction: T05 0067-7060 VER 00

T05 0067-7060 Ver 00 - Approved - Exported from DMS: 2017-06-23 by THGAF

Original Instruction: T05 0067-7060 VER 00

12 General Reservations, Notes and Disclaimers

- © 2017 Vestas Wind Systems A/S. This document is created by Vestas Wind Systems A/S and/or its affiliates and contains copyrighted material, trademarks, and other proprietary information. All rights reserved. No part of the document may be reproduced or copied in any form or by any means – such as graphic, electronic, or mechanical, including photocopying, taping, or information storage and retrieval systems – without the prior written permission of Vestas Wind Systems A/S. The use of this document is prohibited unless specifically permitted by Vestas Wind Systems A/S. Trademarks, copyright or other notices may not be altered or removed from the document.
- The general descriptions in this document apply to the current version of the 4MW Platform wind turbines. Updated versions of the 4MW Platform wind turbines, which may be manufactured in the future, may differ from this general description. In the event that Vestas supplies an updated version of a specific 4MW Platform wind turbine, Vestas will provide an updated general description applicable to the updated version.
- Vestas recommends that the grid be as close to nominal as possible with limited variation in frequency and voltage.
- A certain time allowance for turbine warm-up must be expected following grid dropout and/or periods of very low ambient temperature.
- All listed start/stop parameters (e. g. wind speeds and temperatures) are equipped with hysteresis control. This can, in certain borderline situations, result in turbine stops even though the ambient conditions are within the listed operation parameters.
- The earthing system must comply with the minimum requirements from Vestas, and be in accordance with local and national requirements and codes of standards.
- This document, General Description, is not an offer for sale, and does not contain any guarantee, warranty and/or verification of the power curve and noise (including, without limitation, the power curve and noise verification method). Any guarantee, warranty and/or verification of the power curve and noise (including, without limitation, the power curve and noise verification method) must be agreed to separately in writing.

T05 0067-7060 Ver 00 - Approved - Exported from DMS: 2017-06-23 by THGAF

Attachment 2

Siemens Gamesea

Developer Package SG 4.5-145

Application of the Developer Package
The Developer Package serves the purpose of informing customers about the latest planned product development from Siemens Gamesa Renewable Energy (SGRE). By sharing information about coming developments, SGRE can ensure that customers are provided with necessary information to make decisions.

Furthermore, the Developer Package can assist in guiding prospective customers with the indicated technical footprint of the SG 4.5-145 in cases where financial institutes, governing bodies, or permitting entities require product specific information in their decision processes.

All technical data contained in the Developer Package is subject to change owing to ongoing technical developments. Information contained within the Developer Package may not be treated separately or out of the context of the Developer Package.

The information contained in the Developer Package may not be used as legally binding documentation and cannot be used in contracts between SGRE and any other parties. This Developer Package contains preliminary technical data on SGRE turbines currently under development and can be used in an indicative capacity only.

All technical data is subject to change according to the technical development of the wind turbine.

SGRE and its affiliates reserve the right to change the below specifications without prior notice.

© All Rights Reserved 2018

Developer Package
SG 4.5-145

Table of content

Introduction 3
Technical Description 4
Nacelle Arrangement 7
Nacelle Dimensions 8
Elevation Drawing 9
Blade Drawing 10
Design Climatic Conditions 11
Standard Power Curve, Standard power operational mode 13
Standard Ct Curve, Standard power operational mode 15
Power Curve, Air density, Standard power operational mode 16
Ct Curve, Air Density, Standard power operational mode 18
Standard Acoustic Emission 19
Noise Reduction System (NRS) operational modes 20
Electrical Specifications 25
Simplified Single Line Diagram 26
Transformer Specifications ECO 27
Preliminary Foundation Loads 29
Tower Dimensions 30
Estimated Foundation Design 31
Preliminary Grid Performance Specification, 50 Hz 34
Preliminary Grid Performance Specification, 60 Hz 37
Reactive Power Capability, 50 Hz 40
Reactive Power Capability, 60 Hz 43
SCADA, System Description 46
Codes and Standards For Design, Manufacturing, and Testing 49
Other Performance Features 51

© All Rights Reserved 2018

Introduction

The SG 4.5-145 is the first wind turbine of the new Siemens Gamesa 4.X Platform, the next generation Siemens Gamesa Onshore Geared product series, which builds on the Siemens & Gamesa design and operational experience in the wind energy market.

With a brand new 71m blade, a 4.5 MW generator and a tower portfolio with hub heights ranging from 107.5m to 157.5m, the SG 4.5-145 aims at becoming a new benchmark in the market for efficiency and profitability.

This Developer Package describes the turbine technical specifications and provides preliminary information for the main components and subsystems.

For further information, please contact your regional SGRE Sales Manager.

© All Rights Reserved 2018

Technical Description

Rotor-Nacelle
The rotor is a three-bladed construction, mounted upwind of the tower. The power output is controlled by pitch and torque demand regulation. The rotor speed is variable and is designed to maximize the power output while maintaining loads and noise level.

The nacelle has been designed for safe access to all service points during scheduled service. In addition the nacelle has been designed for safe presence of service technicians in the nacelle during Service Test Runs with the wind turbine in full operation. This allows a high quality service of the wind turbine and provides optimum troubleshooting conditions.

Blades
The SG 4.5–145 Siemens Gamesa blade is made up of fiberglass infusion-molded components. The blade structure uses aerodynamic shells containing embedded spar-caps, bonded to two main epoxy-fiberglass-balsa/foam-core shear webs. The SG 4.5–145 SGRE blade uses a blade design based on SGRE proprietary airfoils.

Rotor Hub
The rotor hub is cast in nodular cast iron and is fitted to the drive train low speed shaft with a flange connection. The hub is sufficiently large to provide room for service technicians during maintenance of blade roots and pitch bearings from inside the structure.

Drive train
The drive train is a 4-points suspension concept: main shaft with two main bearings and the gearbox with two torque arms assembled to the main frame.
The gearbox is in cantilever position; the gearbox planet carrier is assembled to the main shaft by means of a flange bolted joint and supports the gearbox.

Main Shaft
A forged main shaft ensures a comfortable access from the nacelle cover to the hub.

Main Bearings
The low speed shaft of the wind turbine is supported by two spherical roller bearings. The bearings are grease lubricated.

Gearbox
The gearbox is 3 stages high speed type (2 planetary + 1 parallel).

Generator
The generator is a doubly-fed asynchronous three phase generator with a wound rotor, connected to a frequency PWM converter. Generator stator and rotor are both made of stacked magnetic laminations and formed windings. Generator is cooled by air which is cooled with a liquid/air cooling system.

Mechanical Brake
The mechanical brake is fitted to the non-drive end of the gearbox.

Yaw System
A cast bed frame connects the drive train to the tower. The yaw bearing is an externally geared ring with a friction and sliding plain bearing. A series of electric planetary gear motors drives the yawing.

Nacelle Cover
The weather screen and housing around the machinery in the nacelle is made of fiberglass-reinforced laminated panels.

© All Rights Reserved 2018

Tower
The wind turbine is as standard mounted on a tapered tubular steel tower. Other tower technologies will be available for higher hub heights. The tower has internal ascent and direct access to the yaw system and nacelle. It is equipped with platforms and internal electric lighting.

Controller
The wind turbine controller is a microprocessor-based industrial controller. The controller is complete with switchgear and protection devices. It is self-diagnosing and has a touch panel and display for easy readout of status and for adjustment of settings.

Converter
Connected directly with the Rotor, the Frequency Converter is a back to back 4Q conversion system with 2 VSC in a common DC-link. The Frequency Converter allows generator operation at variable speed and voltage, while supplying power at constant frequency and voltage to the MV transformer. The power conversion system is water cooled and has a modular arrangement for easy maintenance.

SCADA
The wind turbine provides connection to the SGRE SCADA system. This system offers remote control and a variety of status views and useful reports from a standard internet web browser. The status views present information including electrical and mechanical data, operation and fault status, meteorological data and grid station data.

Turbine Condition Monitoring
In addition to the SGRE SCADA system, the wind turbine is equipped with the unique SGRE condition monitoring setup. This system monitors the vibration level of the main components and compares the actual vibration spectra with a set of established reference spectra. Review of results, detailed analysis and reprogramming can all be carried out using a standard web browser.

Operation Systems
The wind turbine operates automatically. It is self-starting when the aerodynamic torque is enough. Below rated wind speed, the wind turbine controller fixes the pitch and torque references for operating in the optimum aerodynamic point (maximum production) taking into account the generator capability. Once rated wind speed is surpassed, the pitch position demand is adjusted to keep a stable power production equal to the nominal value. If high wind derated mode is enabled, the power production is limited once the wind speed exceeds a threshold value defined by design, until cut-out wind speed is reached and the wind turbine stops producing power. If the average wind speed exceeds the maximum operational limit, the wind turbine is shut down by pitching of the blades. When the average wind speed drops back below the restart average wind speed, the systems reset automatically.

© All Rights Reserved 2018

Technical Specifications

[redacted]

© All Rights Reserved 2018

Nacelle Arrangement

The design and layout of the nacelle are preliminary and may be subject to changes during the development of the product.

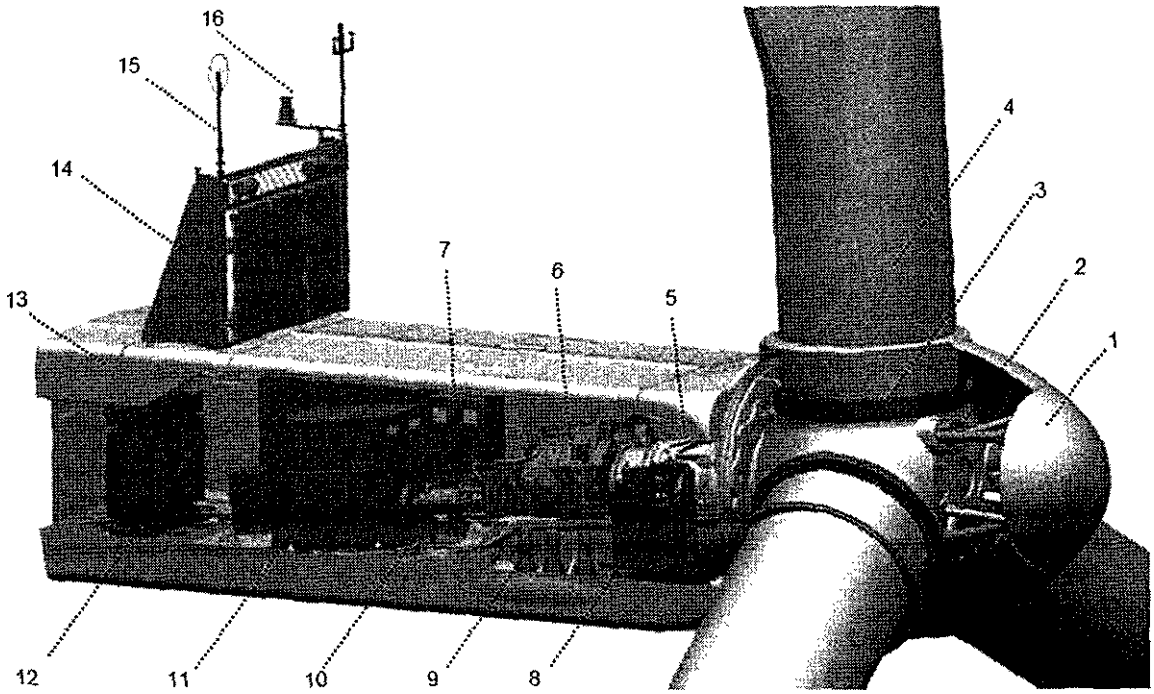

1	Rotor cover	**9**	Yaw system
2	Pitch system	**10**	High speed shaft
3	Blade bearings	**11**	Generator
4	Blades	**12**	Transformer
5	Low speed shaft	**13**	Nacelle cover
6	Gearbox	**14**	Cooling system
7	Electrical cabinets	**15**	Wind sensors
8	Hydraulic group	**16**	Beacon system

© All Rights Reserved 2018

Nacelle Dimensions

The design and dimensions of the nacelle are preliminary and may be subject to changes during the development phases of the product.

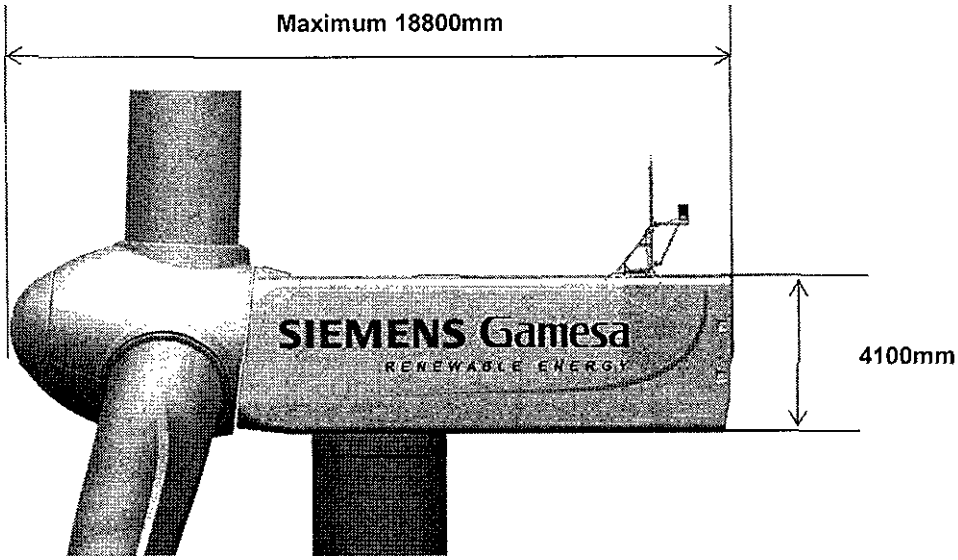

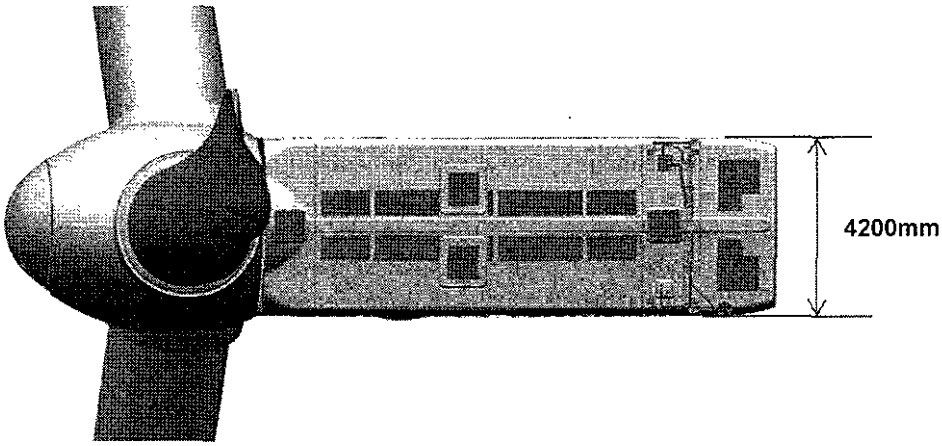

© All Rights Reserved 2018

Elevation Drawing

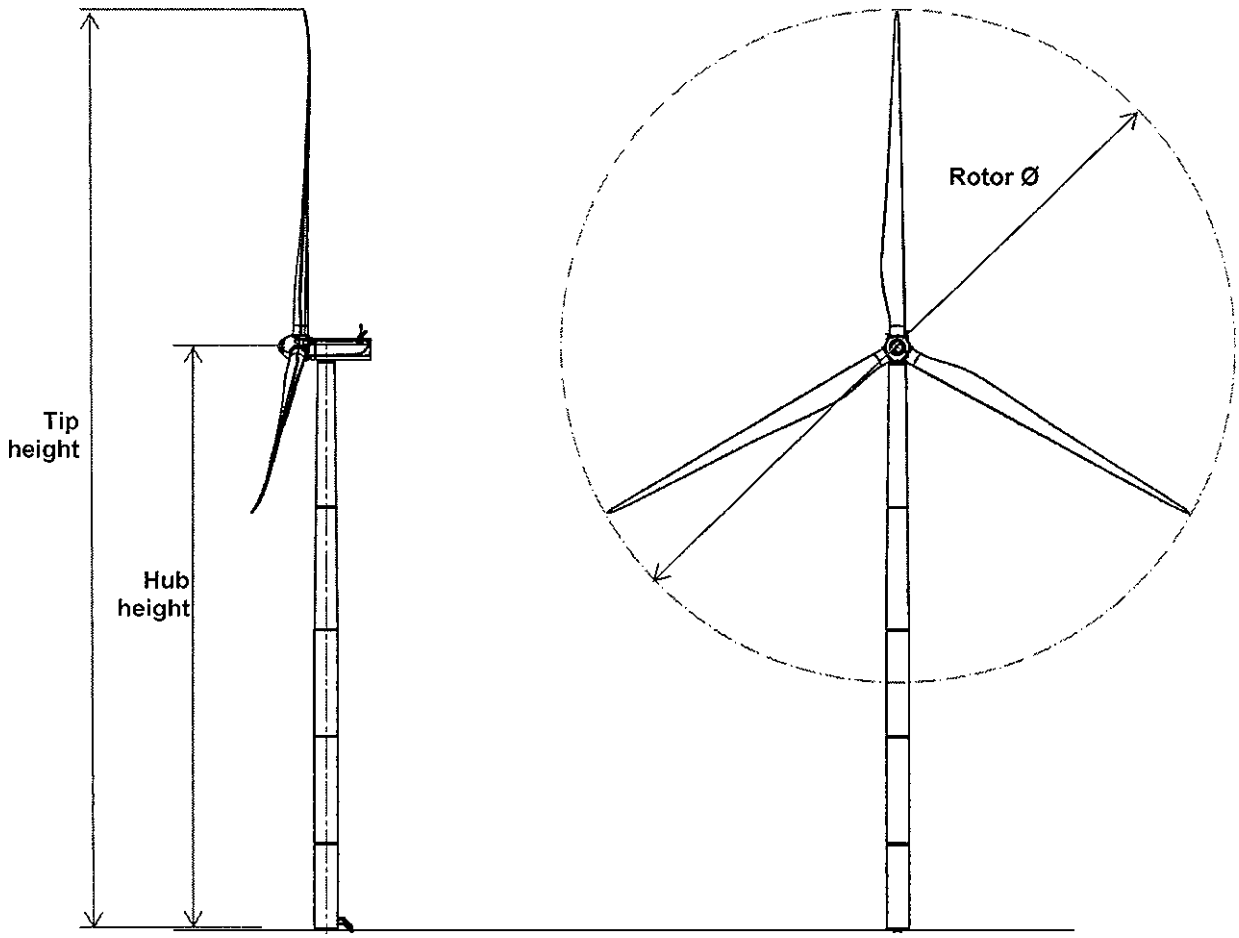

Tip height	180m, 200m, 230m
Hub height	107.5m, 127.5m, 157.5m
Rotor diameter	145m

© All Rights Reserved 2018

[redacted]

[redacted]

Dimensions in millimeters.

© All Rights Reserved 2018

Design Climatic Conditions

The design climatic conditions are the boundary conditions at which the turbine can be applied without supplementary design review. Applications of the wind turbine in more severe conditions may be possible, depending upon the overall circumstances. A project site-specific review requires the completion by the Client of the "Project Climatic Conditions" form.

[redacted]

© All Rights Reserved 2018

[redacted]

© All Rights Reserved 2018

Standard Power Curve, Standard power operational mode

[redacted]

© All Rights Reserved 2018

[redacted]

© All Rights Reserved 2018

Standard Ct Curve, Standard power operational mode

[redacted]

© All Rights Reserved 2018

Power Curve, Air density, Standard power operational mode

[redacted]

© All Rights Reserved 2018

[redacted]

© All Rights Reserved 2018

Ct Curve, Air Density, Standard power operational mode

[redacted]

© All Rights Reserved 2018

Standard Acoustic Emission

Noise Level (LW): Values reported correspond to the average estimated Sound Power Level emitted by the WTG at hub height, called LW in TS IEC-61400-14. LW values are expressed in dB(A). To obtain LWd value, as defined in IEC-61400-14, it must be applied a 2 dB increase to LW.

dB(A): LW is expressed in decibels applying the "A" filter as required by IEC.

Noise generated at standard power operation mode LW is **107.8 dB(A).**

Noise values included in the present document correspond to the wind turbine configuration equipped with noise reduction add-ons attached to the blade.

SG 4.5-145	
Wind Speed [m/s]	LW [dB(A)]
3	95.1
3.5	95.1
4	95.1
4.5	95.1
5	95.5
5.5	97.6
6	99.7
6.5	101.5
7	103.2
7.5	104.7
8	106.2
8.5	107.6
9	107.8
9.5	107.8
10	107.8
10.5	107.8
11	107.8
11.5	107.8
12	107.8
12.5	107.8
13	107.8
13.5	107.8
14	107.8
14.5	107.8
15	107.8

Noise values included in the present document correspond to the wind turbine configuration equipped with noise reduction add-ons attached to the blade.

© All Rights Reserved 2018

Noise Reduction System (NRS) operational modes

[redacted]

© All Rights Reserved 2018

[redacted]

© All Rights Reserved 2018

[redacted]

© All Rights Reserved 2018

[redacted]

© All Rights Reserved 2018

[redacted]

© All Rights Reserved 2018

Electrical Specifications

[redacted]

© All Rights Reserved 2018

Simplified Single Line Diagram

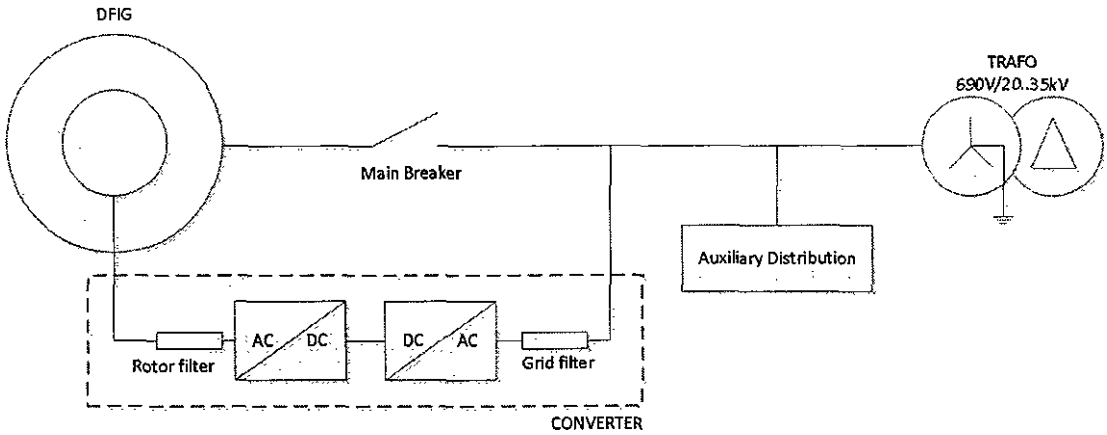

© All Rights Reserved 2018

Transformer Specifications ECO 30 kV*

[redacted]

Transformer Specifications 34.5 kV*

[redacted]

All data are subject to tolerances in accordance with IEC.
***Example for an ECO 30kV and 34.5kV transformers. For other Medium Voltage transformers, consult with SGRE**

© All Rights Reserved 2018

Switchgear Specifications

The installation of a switchgear is an option available upon request. The minimum requirements that must be compliance, from the point of view of electrical protection, are:

Switchgear Specification (38 kV)

[redacted]

© All Rights Reserved 2018

Preliminary Foundation Loads

[redacted]

© All Rights Reserved 2018

Tower Dimensions

[redacted]

© All Rights Reserved 2018

Estimated Foundation Design

[redacted]

© All Rights Reserved 2018

[redacted]

© All Rights Reserved 2018

[redacted]

© All Rights Reserved 2018

[redacted]

© All Rights Reserved 2018

[redacted]

© All Rights Reserved 2018

[redacted]

© All Rights Reserved 2018

[redacted]

© All Rights Reserved 2018

[redacted]

© All Rights Reserved 2018

[redacted]

© All Rights Reserved 2018

[redacted]

© All Rights Reserved 2018

[redacted]

© All Rights Reserved 2018

[redacted]

© All Rights Reserved 2018

[redacted]

© All Rights Reserved 2018

[redacted]

© All Rights Reserved 2018

[redacted]

© All Rights Reserved 2018

[redacted]

© All Rights Reserved 2018

[redacted]

© All Rights Reserved 2018

[redacted]

© All Rights Reserved 2018

Codes and Standards For Design, Manufacturing, and Testing

The wind turbine is designed, manufactured, and tested to Siemens Gamesa Renewable Energy's technical drawings, procedures, and processes that are generally in compliance with the applicable sections of the codes and standards listed herein. This list of codes and standards for design, manufacturing, and testing forms a part of the design basis documentation for the certification of the wind turbine. The edition of the codes and standards is the version used for the certification process which was conducted by an external certifying body.

General

- IEC 61400-22:2010 Ed.1, Wind turbines – Part 22: Conformity testing and certification
- EN 61400-1:2006, Wind turbine generator systems, Part 1: Safety requirements, (IEC 61400-1:2005, modified).
- IEC 61400-1:2005 Ed.3, incl. Amendment. Wind turbine generator systems, Part 1: Safety requirements.
- DIBt – Richtlinie für Windenergieanlagen – Fassung September 2013.
- IEC 61400-11:2012 ed.3: Wind turbine generator systems. Part 11: Acoustic noise measurement techniques.
- IEC 61400-12:2005, Wind turbine generator systems. Part 12: Wind turbines power performance testing.
- IEC/TS 61400-13 Ed.1, Wind turbine generator systems, Part 13: Measurement of mechanical loads.
- IEC/TS 61400-23:2001, Wind turbine generator systems, Part 23: Full-scale structural testing of rotor blades.
- VDI 2230 Blatt 1, February 2003, Systematic calculation of high duty bolted joints – Joints with one cylindrical bolt (Bolt calculations)
- EN ISO 898-1(2009-08), Mechanical properties of fasteners made of carbon steel and alloy steel – Part 1: Bolts, screws and studs.
- EN 10029:2010, Hot rolled steel plates 3 mm thick or above – Tolerances on dimensions, shape and mass
- EN 10083:2006, Quenched and tempered steels – Part 1: Technical delivery conditions for special steels (Main shaft)
- EN 1563 +A1:2004, Founding – Spheroidal graphite cast irons
- EN 10025-1:2004, Hot rolled products of structural steels – Part 1: General technical delivery conditions
- EN 10025-2:2004, Hot rolled products of structural steels – Part 2: Technical delivery conditions for non-alloy structural steels
- EN 10025-3:2004, Hot rolled products of structural steels – Part 3: Technical delivery conditions for normalized/normalized rolled weldable fine grain structural steels
- 97/23/EC Pressure Equipment Directive
- EN 1993 – Design of steel structures
- EN 1999 – Design of aluminum structures
- ISO/TS 16281:2008 Rolling bearings – Methods for calculating the modified reference rating life for universally loaded bearings
- DIN ISO 281 Rolling bearings - Dynamic load ratings and rating life
- DIN ISO 76:2006 Rolling bearings - Static load ratings
- ISO/TS 16281:2008 + Cor. 1:2009 Rolling bearings - Methods for calculating the modified reference rating life for universally loaded bearings
- DNV-DS-J102:2010, Design and Manufacture of Wind Turbine Blades, Offshore and Onshore Wind Turbines

© All Rights Reserved 2018

Electrical

- *EN 61000-6-2:2005 Electromagnetic compatibility (EMC) – Part 6-2: Generic standards – Immunity for*
- industrial environments
- EN 61000-6-4:2007 Electromagnetic compatibility (EMC) – Part 6-4: Generic standards – Emission standard for industrial environments
- *EN 60204-1:2006 Safety of machinery – Electrical equipment of machines – Part 1: General* requirements
- IEC 61400-24:2010, Wind turbine generator systems – Part 24: Lightning protection
- DS/EN 60076–16:2012 - Power transformers – Part 16: Transformers for wind turbine applications
- *IEC 61400-21:2008, Wind turbine generator systems – Part 21: Measurement and assessment of power* quality characteristics of grid connected wind turbines
- Directive 2014/35/EU on Electrical Low Voltage Equipment (LV)
- Directive 2014/30/EU on Electromagnetic Compatibility (EMC)

Quality

- ISO 9001:2015, Quality management systems – Requirements.

Personal Safety

- OSHA 2005 Requirements for clearances at doorways, hatches, and caged.
    - OSHA's Subpart D Walking-Working Surfaces Section 1910.27v
- 2006/42/EC Machinery Directive

Corrosion

- DS/EN ISO 12944-1:2000, Paints and varnishes – Corrosion protection of steel structures by protective paint systems – Part 1: General introduction (class C3 to C4).

© All Rights Reserved 2018

[redacted]

© All Rights Reserved 2018

[redacted]

© All Rights Reserved 2018

Attachment 3

Nordex

NORDEX

QB04-Safety instruction

Rescue and evacuation plan

Wind turbine class Delta4000 - Tubular steel towerWind turbine class Delta4000 - Tubular steel

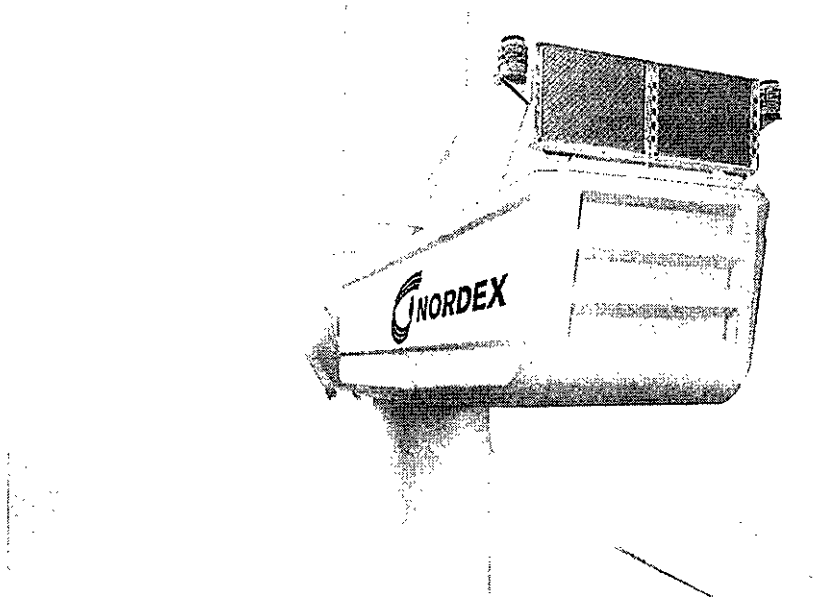

Rev. 0

Document no.:	E0004282961
Status:	Released
Language:	EN - English
Classification:	Nordex Internal Purpose

Translation of the original document
(E0004282961 Rev. 01)
This is a translation from German. In case of doubt, the German text shall prevail.
Document is published in electronic form.
Original at Nordex Energy GmbH, Engineering

The present document has been created by Nordex Energy GmbH and/or affiliated companies as defined in Section 15ff. of the German Stock Corporation Act (AktG).

This document, including any presentation of its contents in whole or in parts, is the intellectual property of Nordex Energy GmbH and/or affiliated companies within the meaning of section 15 et seq. of the German Stock Corporation Act (AktG). The information contained in this document are confidential and must never (not even in extracts) be disclosed to third parties without the prior written approval of Nordex Energy GmbH.

All rights reserved.

Any disclosure, duplication, translation or other use of this document or parts thereof, regardless if in printed, handwritten, electronic or other form, without the explicit approval of Nordex Energy GmbH is prohibited.

© 2018 Nordex Energy GmbH
Langenhorner Chaussee 600
22419 Hamburg
Germany

Phone: +49 (0)40 300 30 -1000

Fax: +49 (0)40 300 30 -1101

info@nordex-online.com
http://www.nordex-online.com

Revision index

Rev.	Date	Author	Reason for revision / chapter	AST
[redacted]	[redacted]	[redacted]	[redacted]	[redacted]

Table of contents

1 General **5**

1.1 Scope 5

1.2 Target group 5

1.3 Abbreviations 5

1.4 Applicable documents 6

1.5 Signs and symbols used 6

1.6 Design of the warning notes 7

1.6.1 Warning levels 7

1.6.2 Notes and information 7

2 Safety information **8**

3 Mounting the escape and rescue plans **9**

4 Turbine **10**

4.1 Annex 1 Escape and rescue plan for Delta4000 wind turbines - tubular steel tower10

1 General

1.1 Scope

These safety regulations present the escape and rescue plan for a Nordex Delta4000 turbine on a tubular steel tower and describe the mounting locations.

1.2 Target group

This instruction is aimed at HSE employees of Nordex.

The target group may be employees from the departments or employees of external companies commissioned by Nordex for the purpose of the safety instruction.

1.3 Abbreviations

Abbreviation	Designation / description
GPS	Global positioning system
n/a	Not applicable
PPE	Personal protective equipment
WT	Wind turbine
WGS 84	World Geodetic System 1984

1.4 Applicable documents

Document no.	Title
Instructions	
E0004553222	Delta4000 safety manual
G0112P1	Work in and around wind turbines (documented procedure), updated and published in QUIS
Other documents	
Workplace Ordinance dated 12 August 2004 (ArbStättV)	
ISO 23601 for internationally uniform fire protection symbols, escape plans and rescue plans	
ISO 7010 standard for graphical symbols – safety colors and safety signs	

1.5 Signs and symbols used

Sign/ symbol	Meaning
✓	Prerequisite
➢	A task to be carried out with no specific order
1. 2.	A task to be carried out in multiple steps Pay attention to the specific order!
➥	Result of a task
•	List with no specific order
–	Subitem of tasks or lists
ℹ	Additional information, notes and hints
📖	Reference to information in other documents

1.6 Design of the warning notes

DANGER

Type and source of the danger!

Possible consequences (optional)

- Action
- Action

1.6.1 Warning levels

Warning level	Description
DANGER	Indicates a hazard with a high level of risk which, if not avoided, will result in death or serious injury.
WARNING	Indicates a hazard with a medium level of risk which, if not avoided, may result in death or serious injury.
CAUTION	Indicates a hazard with a low level of risk which, if not avoided, may result in minor or moderate injury.
NOTE	Indicates a hazard with a low level of risk which, if not avoided, may result in property damage.

1.6.2 Notes and information

NOTE

Additional information, notes and hints

OBSERVE DOCUMENT

Reference to information in other documents

2 Safety information

OBSERVE DOCUMENT

- Safety instructions *E0004553222 Delta4000 safety manual*
- Documented procedure *G0112P1 Work in, on and around wind turbines, updated and published in QUIS*

The safety manual *E0004553222* and the documented procedure *G0112P1* must have been read and understood. The safety notes must be observed.

A prerequisite for carrying out the work described here is the compliance with all national safety-relevant standards and specifications and those defined by Nordex Energy GmbH.

The extensive health and safety regulations implemented at Nordex Energy GmbH form the basis of occupational health and safety and environmental protection.

The applicable accident prevention regulations must be observed.

When using operating materials, always observe and adhere to the manufacturer's information on existing health risks.

General safety instructions (e.g., how to handle respective tools and hoists), references to corresponding guidelines and occupational health and safety regulations, as well as generally accepted handling procedures are not mentioned.

3 Mounting the escape and rescue plans

Mounting:

- Stand out from the environment,
- Accessible and well legible,
- Permanently attached.

Locations:

- At locations where the users of the building structure can inform themselves about escape options,
- At strategic points of the escape route.

Mounting heights

- Escape and rescue plans must be mounted at a height h =1.65 m (plan center) above the standing surface of the observer.

4 Turbine

4.1 Annex 1 Escape and rescue plan for Delta4000 wind turbines - tubular steel tower

NORDEX

ESCAPE AND RESCUE PLAN

Name and location of the wind farm	
WT number	GPS coordinates (WGS84)
	Latitude°: [N/S 00.000000]_____ Longitude°: [E/W 00.000000]_____
WIND FARM OPERATOR	
Company name:	Phone number:

[redacted]

*The rescue and rappelling device is an optional equipment item

Delta4000 - Tubular steel tower

Accident

1. Remain calm
   Call for help:
   - What happened?
   - Where did it happen?
   - How many people are injured?
   - What is the extend of injuries?
   - Who reports?
   - Observe instructions, wait for questions.

   Phone:_____

2. Immediate measures:
   - Perform first-aid
   - Eliminate the hazards

Fire

1. Attempt to extinguish the fire
2. Move to a safe location
3. Call for help:
   - What happened?
   - Where did it happen?
   - How many people are injured?
   - What is the extend of injuries?
   - Who reports?
   - Observe instructions, wait for questions.

   Phone:_____

Legend

	You are here		PPE against falling
	Emergency exit / direction of escape		Fire extinguishers
	First-aid kit		Do not use the service lift in case of fire
	Rescue equipment/rappelling equipment		Main and alternative escape routes
	Horizontal areas		Vertical areas
	Emergency exit via rappelling equipment		

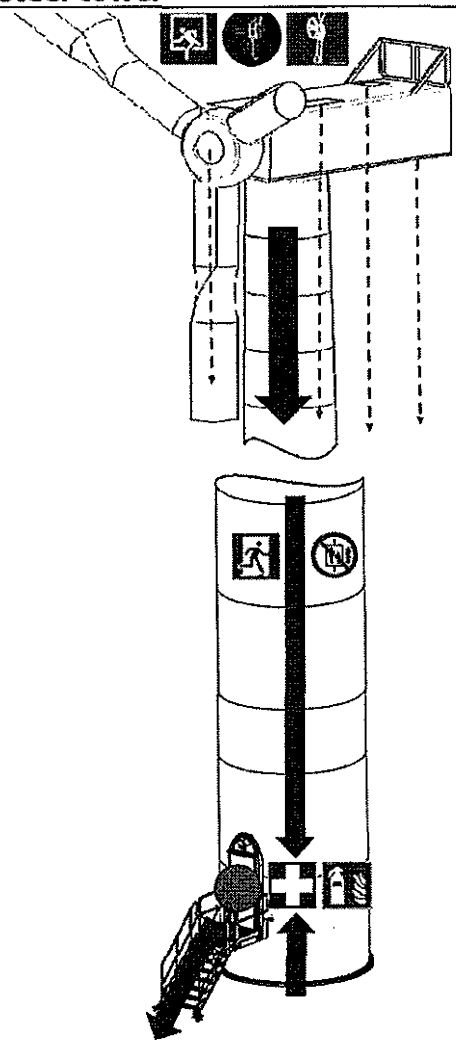

Release Page:

Document title:	**Rescue and evacuation plan**

Document number: E0004675705

[redacted]

This page is part of the document Rescue and evacuation plan, Rev. 0/2018-08-16 with 13 pages.
Document has been electronically created and released.

Safety manual

Rules of conduct on, in and around wind turbines
Wind turbine class Delta4000

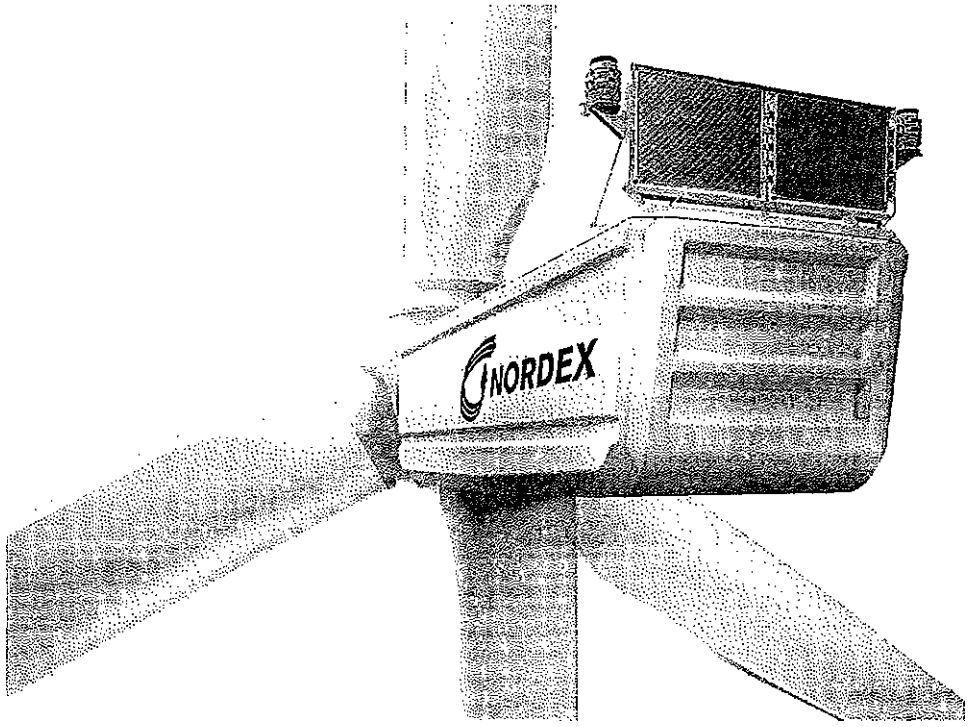

E0004553222

Revision 01 / 2018-08-17

- Translation of the original document (E0003937116, rev. 04) -

This is a translation from German. In case of doubt, the German text shall prevail.

Document is published in electronic form.

Signed original at Nordex Energy GmbH, Engineering Department.

© 2018 by Nordex Energy GmbH

The present document has been created by Nordex Energy GmbH and/or affiliated companies as defined in Section 15ff. of the German Stock Corporation Act (AktG).

This document, including any presentation of its contents in whole or in parts, is the intellectual property of Nordex Energy GmbH and/or affiliated companies within the meaning of section 15 et seq. of the German Stock Corporation Act (AktG). The information contained in this document are confidential and must never (not even in extracts) be disclosed to third parties without the prior written approval of Nordex Energy GmbH.

All rights reserved.

Any disclosure, duplication, translation or other use of this document or parts thereof, regardless if in printed, handwritten, electronic or other form, without the explicit approval of Nordex Energy GmbH is prohibited.

Copyright 2018 by Nordex Energy GmbH.

Contact details

For questions relating to this documentation please contact:

Nordex Energy GmbH

Langenhorner Chaussee 600

22419 Hamburg

Germany

Phone: +49 (0)40 300 30 -1000

Fax: +49 (0)40 300 30 -1101

http://www.nordex-online.com

info@nordex-online.com

1. Conventions ... 5

1.1 Symbols and notes ... 5

1.2 Notes on text format ... 6

2. Introduction ... 7

3. Abbreviations and terms ... 8

4. Safety regulations ... 10

4.1 Intended use ... 10

4.2 General rules ... 10

4.2.1 Basic occupational safety equipment ... 10
4.2.2 Access ... 11
4.2.3 Inside/around the WT ... 11
4.2.4 Operation ... 12
4.2.5 Ascending to the nacelle ... 12
4.2.6 Exiting the WT ... 14
4.2.7 Special safety notes for WTs with extended temperature range ... 15

4.3 Additional safety regulations for specialized personnel ... 16

4.3.1 General safety regulations ... 16
4.3.2 Working in the cable vault ... 18
4.3.3 Using the vertical ladder during erection ... 18
4.3.4 Working in the nacelle ... 18
4.3.5 Working on and in the rotor hub ... 20
4.3.6 Working on the electrical system ... 21
4.3.7 Working on the hydraulic system and with hydraulic tools ... 22
4.3.8 Handling hazardous substances and environmental protection ... 22
4.3.9 Regulations for lifting and winch work ... 22

4.4 Special obligations of the owner ... 23

5. Warning and safety notes inside the WT ... 25

6. Residual risks ... 28

7. Safety equipment ... 30

7.1 Personal fall protection equipment (PFPE) ... 30

7.1.1 Inspection/maintenance ... 30
7.1.2 Components of the PFPE ... 30
7.1.3 Handling the safety harness ... 33

7.2 Rappelling equipment ... 34

7.2.1 Equipment/accessories ... 34
7.2.2 Inspection/maintenance ... 36

7.3 Fire extinguishers ... 36

7.4 First-aid kit ... 36

8. Safety devices ... 37
8.1 Fall arrest system ... 37
8.1.1 Fall arrest systems used ... 37
8.1.2 Attaching the fall arrester ... 37
8.2 Rotor lock ... 39
8.3 Personal attachment points ... 39
8.4 Emergency stop switch ... 40
8.5 Medium voltage circuit breaker ... 41
8.6 Indicating safety-relevant situations ... 41
8.7 Locking the pitch system ... 43
8.8 Rotor hub call button ... 44
8.9 Rotor brake selector switch ... 44
8.10 Emergency lighting ... 45

9. Behavior in specific situations ... 46
9.1 Grid failure ... 46
9.2 Thunderstorm ... 46
9.3 Fire ... 47
9.3.1 Fire in the WT ... 47
9.3.2 Fire in the nacelle ... 48
9.4 Accident ... 48
9.5 Oil spill ... 49
9.6 Earthquake ... 49
9.7 Leaving the nacelle in hazardous situations ... 49
9.7.1 Descending directly from the nacelle ... 50
9.7.2 Descending from the nacelle roof ... 50
9.7.3 Descending from the rotor hub ... 51
9.7.4 Descending a casualty from the nacelle ... 51

10. Ascending inside the tower ... 53
10.1 Preparing for the ascent ... 53
10.2 Using the vertical ladder ... 54
10.2.1 Using the vertical ladder with a fall arrest system ... 54
10.2.2 Using the vertical ladder without fall arrest system ... 56
10.2.3 Leaving the vertical ladder ... 56
10.3 Using the service lift ... 57
10.4 Entering the nacelle ... 58

11. Revision index ... 60

1. Conventions

1.1 Symbols and notes

Warning of personal injury

⚠ DANGER

Failure to comply with the instructions and notes will result in life-threatening injury.

⚠ WARNING

Failure to comply with the instructions and notes may result in serious injury.

⚠ CAUTION

Failure to comply with the instructions and notes will result in injury.

Warning of material damage

NOTICE

Warning of damage to components or material

Notes and information

NOTE

Additional information, notes and hints

OBSERVE DOCUMENT

Reference to information in other documents

Integrated safety notes and information

Information and safety notes integrated into the text. Indicated by the signal word in bold: Note, Notice, Caution, Warning and Danger.

Example

Caution: To prevent damage to the paintwork, the tower sections must not touch the ground.

1.2 Notes on text format

Lists and work steps

- Work step
  - ► Result of a work step
- List
  - Subordinate list

Italic text

Identification of proper names *(e.g., manufacturer name, document title).*

2. Introduction

The present document is intended for the owner/operator, Nordex employees, and employees of contractual companies.

This document contains general regulations and notes for the safe operation, as well as the safe execution of all necessary work steps for the erection, commissioning and maintenance/repair of a Nordex wind turbine (WT).

This document applies to a wind turbine class Delta4000 WT.

Strict adherence to and observation of these regulations and notes prevent possible dangerous situations. For this reason, it is absolutely essential that all persons operating or working on a wind turbine read this document carefully and act in accordance with the instructions and regulations.

The safety manual must be understood in order to ensure safety on, in and around the WT. If questions arise when reading this document, clarify them first and consult Nordex as required.

The respective specific safety notes in the technical documentation (which, for example, describe the operation or maintenance) must also be read and understood.

In addition, the current version of the document *G0112P1 Arbeiten in, an und auf Windenergieanlagen* [*Work in and around wind turbines*] is binding for Nordex employees.

3. Abbreviations and terms

The following terms and abbreviations are used in this document:

Term	Definition
CCV	Cold climate version
CW	Clockwise
Electrically instructed person	An electrically instructed persons is somebody who has been instructed and, where necessary, trained by an electrically skilled person about the allocated task and potential risks of improper behavior as well as informed about the necessary protective equipment and protective measures.
Electrically skilled person	An electrically skilled person is somebody who on account of expert training, knowledge and experience as well as the relevant standards is capable of evaluating the tasks allocated and detecting potential risks.
LOTO procedure	Lockout/tagout procedure; a procedure for preventing unauthorized access, e.g., reactivation of electrical circuits
MV transformer	Medium-voltage transformer
PAP	Personal attachment point
PFPE	Personal fall protection equipment
Qualified person for personal protective equipment against falls from a height	Qualified person for personal protective equipment against falls from a height is somebody who, on account of expert training and experience, has sufficient knowledge in the field of personal protective equipment against falling from a height and is familiar with the relevant occupational health and safety regulations, accident prevention regulations and generally accepted standards of technology to be able to evaluate whether or not a personal protective equipment against falling from a height is in safe condition and is applied properly. In Germany, these requirements are fulfilled by anyone who has successfully participated in a training course, in accordance with the BG (Institution for Statutory Accident Insurance and Prevention) policy "Selection, training and proof of capability of experts for PPE against falling from a height" (BGG 906).
Self-contained electrical operating site	Self-contained electrical operating sites are spaces or locations which are used solely to operate electrical systems and are kept locked. Only electrically skilled and electrically instructed persons have access. Persons without electrotechnical training must enter these rooms or locations only when supervised by above-mentioned electrically skilled persons.

Term	Definition
Trained, specialized personnel	Trained, specialized personnel include those trained, instructed and authorized for the professional execution of work on WTs.
TSL	Tower service lift
WT	Wind turbine

4. Safety regulations

4.1 Intended use

The WT is solely intended to convert the kinetic energy of the wind into electrical energy, and to feed this into an existing electricity network.

The WT must be used only for the intended purpose within the specified performance limits and operating conditions.

Usage outside of these parameters is not permitted.

The manufacturer accepts no liability for damage caused by improper use or failure to adhere to safety regulations.

4.2 General rules

Persons who want to enter, operate, or work on the WT must first have read and understood this safety manual, the operating instructions and other applicable documents for the WT.

It is within the interest of your own safety and the safety of other persons to strictly adhere to the safety and operating instructions contained in these documents.

NOTE
The owner/operator must ensure that this safety manual and the current operating instructions as well as all applicable documents are always available in the WT, are freely accessible and are in a usable condition.

4.2.1 Basic occupational safety equipment

Persons who want to enter the WT must have the following basic occupational safety equipment:

- Suitable protective work clothing (for Nordex employees acc. to NORDEX PPE catalog)
- Safety shoes[redacted]
- Safety helmet with chin strap
- Safety gloves
- Safety glasses

[redacted]

Depending on the task in hand, service employees also require:

- An additional light source for work in areas with poor lighting
- For noisy work in the tower or in the nacelle: Hearing protection

- For switching actions in the medium-voltage range: Safety helmet with face protection, insulating gloves, insulating jacket, insulating mat

When using the vertical ladder or the service lift for the ascent in the tower or while staying in a fall hazard area, the personal fall protection equipment (PFPE) must also be used, see chapter 7.1 "Personal fall protection equipment (PFPE)".

4.2.2 Access

Persons with pacemaker are not permitted to enter the turbine. Strong electromagnetic fields may arise in the WT, which seriously interfere with the function of pacemakers and may result in an immediate danger to the life of the affected person.

The WT is classified as a self-contained electrical operating site. For this reason, persons who want to enter the WT or must carry out work in or on the WT must meet special requirements.

The following persons are authorized to access the WT:

- Electrically skilled persons
- Electrically instructed persons

All other persons may enter the WT only under the supervision of one of the aforementioned persons.

If a person enters a WT for the first time, on-site instructions must be provided by an electrically skilled person familiar with the WT.

The owner of the WT must take suitable measures (e.g. key authorizations) to ensure that unauthorized persons cannot access the WT.

4.2.3 Inside/around the WT

When inside the WT or in its direct proximity, safety helmet and high safety shoes must be worn.

All warning and safety signs in the WT and all operating instructions must be strictly followed.

While inside the WT, it must be ensured that unauthorized persons do not enter the WT. This is achieved by means of corresponding signs.

[redacted]

Depending on the general weather conditions, observe changes to the weather when inside the WT for prolonged periods, particularly when working in the nacelle, as well as on and in the rotor hub.

Such observation is necessary in order to take measures early enough to prevent dangerous situations caused by freshening wind or approaching thunderstorms.

Loose, long hair, loose clothing, or jewelry that may get caught or dragged into rotating parts are not permitted.

To prevent accidents from falling objects, it must be avoided to stay on the bottom tower platform in the area of the service lift.

Smoking is not permitted in the WT.

4.2.4 Operation

The WT has been designed, constructed and erected using state of the art technologies and in accordance with the relevant technical standards and regulations.

Despite this, incorrect usage can result in dangerous situations, which can put persons' health and lives, and the WT or other material assets at risk.

For this reason, the WT must be operated only:

- According to its intended use
- In technically sound condition
- In compliance with the operating and maintenance instructions

The owner/operator must perform operator control actions on the WT only after receiving expert instructions. Operator control actions by the owner/operator are limited to starting and stopping as well as querying WT production data with the aid of the software provided by the manufacturer.

Individual components of the WT must be manually operated only by trained specialized personnel, who are trained, instructed and authorized for this purpose.

Operating personnel currently undergoing training must work on the WT only under the supervision of an experienced person. A successfully completed training must be confirmed in writing.

The WT is operated automatically. Operational faults are identified by the control system, and trigger respective error messages, right through to shutting down the WT. Faults must be identified and rectified only by trained, specialized personnel.

4.2.5 Ascending to the nacelle

Only persons who are physically capable are permitted to ascend into the nacelle. There are also further requirements for specialized personnel, see "Additional safety regulations for specialized personnel" on page 16.

If a person enters the nacelle who has not passed the rappel and rescue training the following must be observed: At least two other persons must be in the WT at the same time who have both passed the rappel and rescue training and of which one must be present in the nacelle.

The following conditions and rules apply to an ascent:

- The 10-minute average wind speed is not higher than 20 m/s.
- The service lift and vertical ladder with fall protection system (valid inspection label or inspection record) are in full working order.

- The responsible Remote Monitoring team has been informed.
- The WT is stopped manually and secured against reconnection.
- Remote access to the controls must be disabled.
- The emergency lighting in the tower is functioning.

Communication

Before starting the work and during all work in and on the WT, communication or an emergency call facility must be guaranteed.

Communication must be ensured among the persons in the WT and other persons present in the wind farm and to rescue services in case of emergency.

When ascending to the nacelle, at least one mobile communication device (two-way radio, cell phone) must be carried along.

[redacted]

Entering the service lift

The following rules apply if a service lift is present:

- The track must always be inspected during an ascent and/or descent.
- During automatic travel for material transportation the simultaneous use of the ladder by persons is prohibited for all service lift variants.
- When ascending into and descending from the nacelle always use the service lift.
- It is not permitted to use the service lift and the vertical ladder at the same time, as this would endanger the person using the vertical ladder.
- The service life must be operated only by persons instructed in the operation and daily checks of the relevant service lift.
- Only use the service lift if the daily checks prescribed by the manufacturer were completed successfully and documented. The inspection plan and inspection protocol are in the service lift.
- When using the service lift, it is obligatory to always secure yourself against falling from a height. For this purpose, the PFPE must be used, connected to the attachment points in the service lift cage.
- Do not use the service lift in case of fire.

Vertical ladder

The following rules apply when using the vertical ladder:

- It is obligatory to always secure yourself against falling. For this purpose, use the PFPE in connection with the fall arrest system.

- Use PPE against falling (safety harness, fall arrester, 2 energy absorbers) to secure yourself in the tower and on the WT. Before changing the safety system, secure the attachment point with an energy absorber.
- Before using the vertical ladder, ensure that the service lift is not used at the same time.
- Before using the vertical ladder, remove any loose objects from pockets in clothing and either leave these behind or secure them against falling out. Larger or heavier objects must be transported into the nacelle with the on-board crane.
- Before and during the ascent, carry out a visual inspection on the vertical ladder and fall protection system to ensure that there is no damage.

  If in any doubt,
  - Cancel the ascent, and, if necessary, also secure yourself on the ladder upright using the lanyard with energy absorber
  - Immediately inform the responsible service company and the Remote Monitoring department
- Only one person at a time may be on the vertical ladder [redacted]
- Note that the number of persons allowed to use the vertical ladder at the same time may be restricted. Refer to the user manual.
- If a tower platform has an access hatch, this must be closed immediately after passing through it.

Personal fall protection equipment (PFPE)

The following rules apply when using the PFPE:

- Use only your personal PFPE.
- Ascent to the WT is only permitted with a valid certification in the [redacted]
- The PFPE must be checked for damage before use.
- A PFPE that has been put under stress due to a fall must no longer be used and has to be checked and, if required, replaced by a qualified person.
- In accordance with legal regulations, regular inspections must be performed on the PFPE by a qualified person (in Germany at least every 12 months).

4.2.6 Exiting the WT

The owner or operator must restore the operational state of the WT before exiting it.

This means in particular:

- Close and secure all hatches and accesses into the WT.
- Inform Nordex Remote Monitoring of the intention to leave the WT.

- The PFPE must be complete and properly stored in the correct place.
- Restart the WT if it has been stopped manually.
- Log off on the turbine PC.
- Re-establish remote access to the control system as necessary.
- Switch off the lighting.
- Lock the door in the tower base.

The same applies to specialized personnel after completion of work on the WT.

The following must also be ensured:

- The rotor lock is released,
- The guy rope and the chain for the on-board crane must be hauled in,
- The rotor brake, the pitch system, the manual control unit at the Topbox and the yaw system are released for automatic mode with the respective selector switches,
- The WT control system must be ready for operation,
- Any contamination must have been removed, and the WT must be cleared of tools and packaging.

If specialized personnel intend to briefly leave the WT, although the work is not yet complete, the following must be ensured:

- Remote access to the WT control system must not be possible
- The WT must be in a safe condition
- Unauthorized persons must not be able to access the WT

4.2.7 Special safety notes for WTs with extended temperature range

As an option, Nordex WTs can be designed for an extended temperature range.

WTs in CCV design

WTs with the CCV option are designed for operating at temperatures down to -30 °C. Work on the WT, however, is permitted only at temperatures down to -20 °C.

When staying or working inside the WT at extremely low temperatures, do not touch any metallic parts with bare hands because there is the risk of freezing to it. Wear safety gloves.

The tools and accessories must be suitable for use at extremely low temperatures.

4.3 Additional safety regulations for specialized personnel

4.3.1 General safety regulations

Work steps for erecting, commissioning, and maintaining the WT must be performed only by trained, specialized personnel.

Any work on and in the WT must be performed only after a manual stop.

During work in the WT, at least 2 employees must be on site at all times.

During work with sparking tools, a second person with a fire extinguisher must be ready in the working area.

If sparks occur, use temporary covers in the working area to prevent a fire.

In addition, the generally accepted rules on safe and proper execution of work as well as the latest versions of the accident prevention regulations must be observed.

In all countries where turbines are erected the existing national regulations concerning accident prevention and environmental protection must be adhered to.

Specialized personnel

Specialized personnel working on the WT must:

- Regularly take part in rescue training and first-aid training
- Possess a valid certificate for working at heights.

Safety equipment

- Each employee must carry and use their personal PFPE.
  The PFPE and, if applicable, the rappelling equipment provided in the WT are intended for use only by the owner.
- It is mandatory to wear safety glasses for any work inside tower and nacelle.
- Hearing protection must be used when carrying out noisy work, particularly in the tower.
  When using hearing protection, it must be ensured that those persons present are able to communicate by using hand signals agreed in advance.
- In the case of work on the hydraulic or cooling system, an emergency eyewash bottle must be carried along.

Responsibility and communication

- For the period of the work to be completed, the responsible employee is technically and disciplinary responsible for all subordinate employees.
  Before starting the work, the responsible employee must instruct subordinate employees in the safety regulations to be observed, and ensure that they are adhered to.

- The responsible employee must be familiar with the telephone numbers of the local rescue services and the power utility and keep them readily available. It must be ensured that communication with rescue services is possible at all times.
- It must be ensured that all persons involved are able to perfectly communicate at all times (if necessary, an interpreter must be used).
  An adequate number of two-way radios with uniform frequencies must be available.

Preventing re-activation and remote access

NOTE

Nordex employees only: To secure the system against reconnection, use the lockout/tagout (LOTO) procedure. [redacted]

- Prior to starting work on the WT, perform a manual stop and disable remote access to the control system. For this, the operating mode switch must be set to "Local".
  This also applies for the WT at standstill as this may be due to an error that occurred during idle mode. If the error is no longer active, the WT will automatically restart.
- If parts of the WT or the entire WT are switched off during maintenance or repair work, these parts must be secured against automatic or accidental re-activation.
- As an option, Nordex WTs can be designed for an extended temperature range

Changing settings and repair work

- To ensure that the WT can operate correctly and safely, factory-set switching points on monitoring and control components, such as pressure monitoring devices, valves, throttles or control parameters, must be changed only for testing purposes.
- Once tests have been completed, the specified values must be reset immediately.
- Only use original spare parts from the manufacturer for repair work. It is prohibited to use parts from manufacturers that have not been expressly approved by the manufacturer of the WT.
- Any damaged machine components must be replaced. If this is not possible, the WT must remain stopped.

Disassembling safety devices

- If it is necessary to disassemble safety devices in order to execute work steps, these must be re-assembled directly after the work has been completed, and must then be checked for proper functioning.
- It is not permitted to permanently put safety devices out of service.

Using the on-board crane

- Before starting the crane, stop the yaw system.
- Do not transport persons with the on-board crane.
- Do not stand or walk under suspended loads.
- Secure a wide area on the ground underneath the suspended load.
- The crane hook must be secured with a guy rope from the ground and be kept clear from the tower.
- The use of the crane must be canceled if it is likely to be unsafe due to bad weather, e.g., strong gusty wind.
- Communication between the acting persons in the nacelle and on the ground must be ensured.

4.3.2 Working in the cable vault

Live cables may get damaged during work in the cable vault. Therefore:

- Before starting any work with heavy tools and auxiliary devices, disconnect the cables in the working area.
- Do not step onto the cables.
- Protect the cables appropriately against mechanical damage.
- Check the cables for damage after completing the work.

While in the cable vault, the escape route must be kept free at all times. Using the manual control unit, position the service lift approx. 2 m above the hatch. Prevent reactivation of the service lift with the mechanical lock (transport lock) according to the manufacturer's operating instructions.

4.3.3 Using the vertical ladder during erection

During erection, it may occur that the fall arrest system is not yet available, or has not yet been released for use.

If the vertical ladder must still be used, then special rules of conduct must be adhered to:

- A sign on the vertical ladder must explicitly indicate that the fall arrest system is not yet available, and that the person ascending the vertical ladder must be secured against falling using the lanyard with energy absorber.
- Always safeguard yourself against falling by alternately attaching the two ends of the lanyard with energy absorber to the ladder uprights.

4.3.4 Working in the nacelle

During all work in the nacelle, observe the green, yellow and red signal lamps. The green signal lamp must be permanently on, the yellow and red signal lamps

must be off, see "Indicating safety-relevant situations" on page 41. If this is not the case, the WT is in a safety-relevant condition. In this case, the responsible employee must decide which work may have to be stopped.

Permissible wind speeds

Work in the nacelle is only permitted up to the following wind strengths:

- up to 9 m/s in the 10-minute average: Work at the exposed drive train if this has been locked exclusively by the rotor brake,
- up to 12 m/s in the 10-minute average: Work at the exposed drive train if this has been locked by the rotor lock,
- up to 12 m/s in the 10-minute average: Work in the hazard area of the yaw bearing and in the rotor hub.

If the permissible wind speed is exceeded, this is indicated by an acoustic and visual alarm, see "Indicating safety-relevant situations" on page 41. In this case, the responsible employee must decide which work may have to be stopped.

After entering the nacelle

Immediately after entering the nacelle, the following initial tasks must be carried out prior to performing any maintenance or repair work:

- Move the rappelling device and descender to be carried in the service vehicle into the nacelle and keep it at hand.

  Caution: If more than two persons will be staying in the nacelle, a sufficient number of rappelling equipments must be transported into the nacelle.

Fixed guards

If fixed guards (e.g., gearbox output shaft cover) must be removed during maintenance work or repairs, these must be completely reassembled with all fasteners after work is completed.

Working on the drive train

In the case of an error in the pitch system, i.e. not all rotor blades are in the 95 ° position, this error must be rectified before starting any work on the drive train.

For any work on the drive train, the rotor must always be locked on the rotor shaft. The rotor must be locked with the rotor brake only if required for completing certain work steps.

Working on the roof

Work on the nacelle roof is not permitted at 10-minute average wind speeds above 12 m/s.

Only areas that are sanded and colored must be stepped on. When working on the roof, the employee must be attached to one of the marked personal attachment points using a lanyard with energy absorber. Furthermore, the employee must remain in regular verbal or visual contact with one of the other employees. This second person must be able to initiate necessary rescues in due time.

Working alone in the nacelle

If an employee is working alone in the nacelle, he/she must remain in regular verbal or visual contact with one of the other employees who is able to initiate necessary rescues in due time.

Staying in the nacelle with the WT in operation

Staying/working in the nacelle during operation is prohibited. If it is necessary to stay in the nacelle with the WT in operation in order to complete certain work steps (e.g., for test runs), the following rules must be observed:

- All protective covers over rotating parts must be in place, unless they must be removed in order to complete the work steps.
- The guy rope and the chain for the on-board crane are hauled in.
- Lanyards that are attached to the safety harness must be taken off.
- Tight work clothes must be worn.
- A safe position in the rear part of the nacelle outside the area of the gearbox output shaft must be taken.
- Hearing protection must be worn and reliable communication between the present persons must be ensured.

4.3.5 Working on and in the rotor hub

It is permitted to access the rotor hub and perform work on or in the rotor hub only if:

- The 10-minute average wind speed is less than 12 m/s,
- The rotor is locked on the rotor shaft,
- The rotor lock is secured according to the LOTO procedure, see "Preventing re-activation and remote access" on page 17,
- The yaw system is locked,
- Regular visual and verbal contact to one of the other employees is ensured. This second person must be able to initiate necessary rescues in due time, if required.

If two employees are required for work in the rotor hub, a third employee must stay in the nacelle.

If work is to be carried out in the rotor hub, the rappelling equipment must be carried along into the hub.

During any work in the rotor hub, observe the green signal lamp. It must be permanently lit. If this is not the case, the WT is in a safety-relevant condition. Contact the responsible employee for further actions.

For all work during which persons might be endangered by the movement of a rotor blade the affected pitch drive must be disconnected and mechanically locked, see "Locking the pitch system" on page 43.

4.3.6 Working on the electrical system

NOTE

Nordex employees only: To secure the system against reconnection, use the lockout/tagout (LOTO) procedure. [redacted]

Work on the electrical system in the WT must be performed only by electrically skilled and electrically instructed persons.

Work on medium-voltage switchgear must be performed only by electrically skilled persons with a valid switching authorization.

Electrical equipment on which inspection, maintenance and repair work must be performed, must be disconnected.

Caution: Actuating the emergency stop button does not ensure that the respective equipment is dead.

To ensure that the system is dead, five safety rules must be observed:

- Switch to zero potential.
- Secure against reactivation.
- Verify that the system is dead.
- Ground and short-circuit.
- Provide protection against adjacent live parts.

To verify that all components are de-energized, use two-pole voltage testers according to IEC 61243-3, measurement category CAT III 1000 V or CAT IV 600 V. Devices that comply with this standard (not equipped for current measurement) prevent the development of arc short-circuits.

Only electrically skilled persons with switching authorization are permitted to measure voltages on converters/converter cabinets up to 1,500 V DC, and to verify that they are dead. These checks must be performed only while wearing complete and suitable PPE (helmet with face protection, insulating gloves, insulating jacket, and insulating mat), which is mandatory for persons with switching authorization.

Always keep the electrical switch cabinets locked. Only authorized persons who are in the possession of a key or special tools are authorized to access these switch cabinets. If work must be performed on a switch cabinet integrated into a fire extinguishing system, the fire extinguishing system must be deactivated before starting any work.

Any work on live parts or cables is prohibited. The only exception is troubleshooting by specialized personnel using suitable measuring instruments and test adapters, measurement category CAT III 1000 V or CAT IV 600 V.

Never clean electrical equipment with water or similar liquids.

4.3.7 Working on the hydraulic system and with hydraulic tools

Any work on the hydraulic system of the WT must be performed only by trained specialized personnel.

Before starting any work, all hydraulic parts of the turbine, including any accumulators, must be depressurized. The hydraulic pump must be disconnected.

Ensure everything is kept scrupulously clean and prevent dirt and water from entering the system when performing work on the hydraulic system.

Always wear safety glasses and safety gloves when working with hydraulic tools (e.g., hydraulic preloading of screw connections) or at the hydraulic system. User instructions and safety notes of hydraulic tool manufacturers must be observed.

4.3.8 Handling hazardous substances and environmental protection

When handling hazardous substances such as oils, greases, coolants, or cleaning fluids, observe the manufacturer's safety and using instructions applying to the product. The responsible employee must carry these instructions with him. The specified safety measures, such as safety gloves and pair of safety glasses, must be applied.

Any work that is performed on the WT must comply to the regulations of waste avoidance and of proper waste treatment and waste disposal.

Especially, ensure that substances hazardous to ground water, such as greases, oils, coolants and solvent-based cleaning fluids, cannot penetrate into the ground, into bodies of water or into the sewage system. These substances must be collected, stored, transported, and disposed of in suitable containers.

Remove any oil leaks without delay in order to avoid the risk of slipping.

Determine and eliminate the cause of abnormal leaks. If this is not possible, the WT must be shut down.

In-house and legal regulations on the reporting of environmental incidents must be observed.

To prevent fire hazards, cleaning supplies must be properly disposed of after work is completed.

4.3.9 Regulations for lifting and winch work

General

Caution: Loads may only be lifted with the on-board winch if the rotor has been braked and locked.

The regulations for crane work may be different from one country to another. The responsible employee must find out about country-specific regulations before starting the work, and must inform subordinate employees about these regulations in writing.

A contact person who is familiar with these regulations must be available for consultation.

Regulations on lifting of components

Only suitable, approved and certified lifting tackles with sufficient load capacity must be used to hoist components.

To avoid uncontrolled swinging of the load position and raise the crane hook exactly vertical above the lifting tackle when lifting loads.

No one must stand or walk under the suspended load.

All individuals must maintain adequate safety distance from suspended loads to prevent injuries from falling objects.

Special work under suspended loads, which cannot be completed in a different way, is permitted only at the express instruction of a defined responsible person. Prerequisite for this is a clear agreement with the crane operators and a safety person.

Weather conditions

During thunderstorms, all crane work must be stopped due to a risk of lightning striking the crane or a component. For behavior during thunderstorms see "Thunderstorm" on page 46.

Consult the crane operator to determine the maximum wind speed at which crane work is possible.

The limit wind speed for crane work depends on the type of crane, the design of the crane and the wind conditions.

The crane operator is fully responsible during all crane work.

The responsible employee and the crane operator mutually agree when crane work must be stopped due to the wind conditions and when they can be resumed.

4.4 Special obligations of the owner

The owner/operator is particularly responsible for ensuring a high degree of safety when operating the WT and while persons are inside the WT.

In particular, the owner must ensure that:

- Only authorized persons have access to the WT, e.g., by means of an appropriate key concept. If no authorized persons are in the WT, it must be kept locked
- The PFPE in the WT or the wind farm is carefully stored
- In a wind farm where not all WTs are equipped with a PFPE, suitable information on the storage location of the PFPEs available in the wind farm is provided in all WTs
- This document and all others stored in the WT by the manufacturer (e.g., the operating instructions for the WT and circuit diagrams) are always available in the WT and are in a usable condition

- The signs on and in the WT are in a proper condition and are replaced as necessary
- The work steps required for WT maintenance are organized and executed on time and in accordance with the manufacturer's specifications
- For their presence in the WT and that of accompanying persons a separate safety concept has been prepared and is being applied, in particular regarding rescue during an emergency

[redacted]

Inspections of special equipment

There are specific, periodic inspection obligations for WT safety equipment, various safety devices and turbine components for all countries in which turbines are erected.

These checks are not part of the standard maintenance work and must be performed by qualified and appointed persons.

The owner/operator is responsible for organizing these checks and for checking the proper and timely execution.

These special checks apply to:

- The owner's PFPE
- The personal attachment points
- The rappelling equipment stored in the WT, if applicable
- Vertical ladder and fall arrest system
- Specific pressure tanks of the hydraulic system
- The service lift
- The overhead crane and electric chain hoist
- The fire extinguishers and, if applicable, the automatic fire alarm and fire extinguishing system
- The burglar alarm system, if applicable
- The first-aid kits

For detailed information, e.g. on inspection periods, refer to the general maintenance instructions.

5. Warning and safety notes inside the WT

Corresponding signs inside the WT provide warnings about possible dangerous situations, see the following table.

Furthermore, signs containing operating notes and rules of conduct are attached to various turbine components. These must be observed at all times.

NOTE

The owner is responsible for ensuring that the signs in and on the WT are in a usable condition and are replaced as necessary.

Sign/symbol	Meaning
	Warning of a fall hazard
	Warning of a crushing hazard
	Warning of hand injury
	Warning of hazardous voltage
	Warning of slip hazard
	Warning of tripping hazard
	Warning of hot surfaces
	General warning
	Warning of outgassing batteries

Sign/symbol	Meaning
	No open flames
	No entrance for persons with pacemakers or implanted defibrillators
	Access for unauthorized persons is forbidden
	No smoking
	Do not step here
	General sign giving orders
	Wear hearing protection
	Use a helmet
	Use safety gloves
	Wear safety glasses
	Wear protective clothing
	Secure yourself with a rope
	First-aid kit

Sign/symbol	Meaning
	Escape route
	Fire extinguishers

6. Residual risks

Nordex WTs comply with state of the art technology and have high safety standards.

Despite this, certain risks remain when the WT is operated, and particularly when performing maintenance work in and on a WT.

Slip hazard due to ice

In icy conditions, there is an increased risk of slipping when approaching the WT, and particularly when using the external staircase.

In this weather conditions, watch your step accordingly when approaching the WT or take actions to avoid slipping on iced floor.

Ice throw

The primary residual risk when operating the WT is the risk of ice throw during the cold season. Where required, the owner is obliged to point out the risk of ice throw by means of suitable signs and labels, e.g., a sign in the access area.

[redacted]

If there is a risk of ice throw, take particular caution when approaching the WT. In particular, avoid standing or walking below the rotor blades.

For this reason, particularly in locations with an increased risk of icing, it is recommended to equip the WT with an ice sensor, which is optionally available.

In this case, the control system stops the WT automatically when detecting any signs of icing on the ice sensor. [redacted]

Falling objects

When working at heights, objects may be dropped accidentally.

For this reason, it is prohibited to stand or walk underneath persons working at heights. The respective area on the ground must be secured accordingly.

Falling into the safety harness

When working at heights, persons may fall into the safety harness, despite adhering to all rules of conduct.

In this case, a quick rescue is necessary in order to prevent the risk of a suspension trauma and any associated health risks for the person affected.

Tripping and slipping

There is an increased risk of tripping, especially in the nacelle and the rotor hub, due to the different height and width of steps, as well as the limited space.

Minor leaks, grease or climatic influences may also cause a risk of slipping.

For this reason, particular caution is advised while staying and moving in the WT.

7. Safety equipment

The WT is equipped with various pieces of safety equipment to ensure safety inside the WT.

NOTE

The safety equipment must be regularly inspected by a qualified person in accordance with the manufacturer's specifications.

For safety equipment that is permanently stored in the WT, the owner/operator of the WT is responsible for completing these inspections.

7.1 Personal fall protection equipment (PFPE)

In addition to the standard protective clothing, which includes at least high safety shoes (ankle-high and class S3), safety gloves and a safety helmet, personal fall protection equipment (PFPE) is required, particularly when using the vertical ladder.

It protects against falling while standing or walking in a fall hazard area.

The PFPE for the owner and one accompanying person can be obtained from Nordex.

NOTE

The scope of supply of the PFPE depends on the applicable contract.

If the supply of PFPEs has been agreed to contractually, the owner is obliged to carefully store the PFPE.

In a wind farm where not all WTs are equipped with a PFPE, the owner must provide suitable information on the storage location of the PFPEs available in the wind farm in all WTs.

7.1.1 Inspection/maintenance

The PFPE must be inspected by a qualified person in accordance with the local legislation. In Germany inspections every 12 months are required.

The owner/operator is solely responsible for organizing and monitoring the inspection of the owner's/operator's PFPE, see chapter 4.4 "Special obligations of the owner".

7.1.2 Components of the PFPE

The PFPE for specialized personnel consists of the following parts:

- One safety harness with a sternal fall-arrest eyelet, a dorsal fall-arrest eyelet and, if applicable, an abdominal climbing-protection eyelet

- A safety harness, consisting of:
  - Dorsal and sternal fall-arrest eyelet,
  - Chest eyelet and/or
  - Abdominal eyelet
- One lanyard with energy absorber as Y-rope or two separate lanyards with energy absorber
- One fall arrester, permitted for use with the respective fall arrest system in the tower
- One adjustable work-positioning lanyard
- One webbing sling
- Two snap hooks [redacted]

[redacted]

Safety harness

The safety harness has a sternal fall-arrest eyelet, e.g., for attaching a fall arrester, and a dorsal fall-arrest eyelet, e.g., for rescues, see Fig. 1.

The two lateral work-positioning eyelets of the abdominal strap can be used, for example, for the adjustable lanyard.

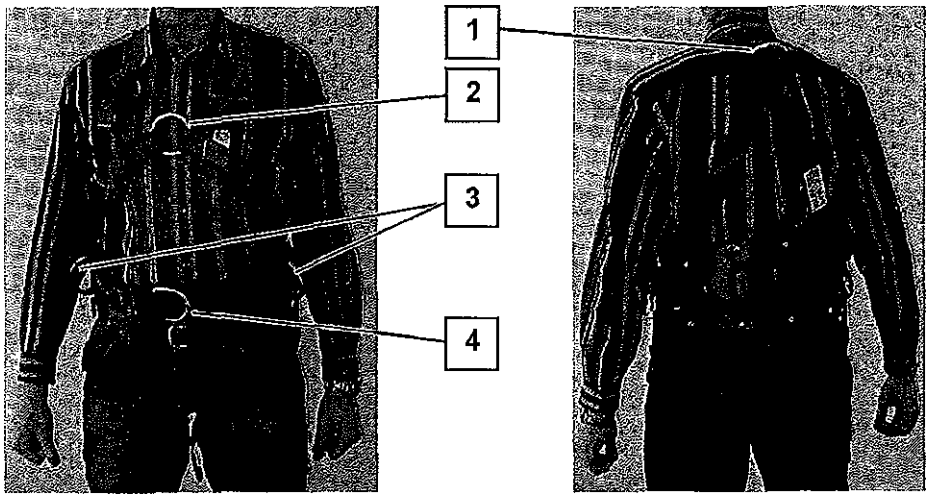

Fig. 1 *Safety harness (example)*

1 Dorsal fall-arrest eyelet
2 Sternal fall-arrest eyelet
3 Lateral work-positioning eyelets
4 Abdominal eyelet

Twin-leg lanyard with an energy absorber

The lanyard with energy absorber serves for safeguarding at a fixed attachment point, for example when there is a fall hazard during a change of location.

The lanyard with energy absorber has two large snap hooks for attaching to an attachment point, and one small snap hook for hooking into the dorsal fall-arrest eyelet of the safety harness, see Fig. 2.

The energy absorber on both halves of the lanyard ensures that the fall of a person is arrested smoothly.

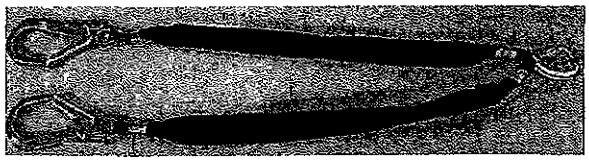

Fig. 2 Lanyard with energy absorber (example: type Shockyard V Flex)

When using a lanyard with energy absorber of the type *Shockyard V Flex*, do not attach the two snap hooks at the same height because, doing so, neither of the two energy absorbers will deploy in the case of a fall.

Adjustable work-positioning lanyard

An additional piece of safety equipment is required in order to secure yourself in awkward positions where there is a fall hazard. This also ensures to have both hands free for performing the necessary work.

For this an adjustable work-positioning lanyard available, see Fig. 3.

The adjustable work-positioning lanyard is attached to the work-positioning eyelets on the safety harness.

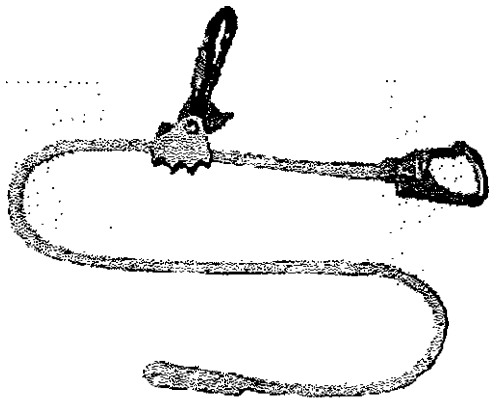

Fig. 3 Adjustable work-positioning lanyard

7.1.3 Handling the safety harness

NOTE

The handling of the PFPE is explained here with an example.

In principle, the same procedure also applies to other versions of the safety harness. Observe the manufacturer's user instructions.

- Attach the lanyard with energy absorber to the dorsal fall-arrest eyelet of the safety harness with the small snap hook and secure it.
- Attach the large snap hooks to the lateral work-positioning eyelets on the left and right side.
- Put on the safety harness like a jacket.
- Pull the right chest strap through the sternal fall-arrest eyelet and lock it into the buckle.

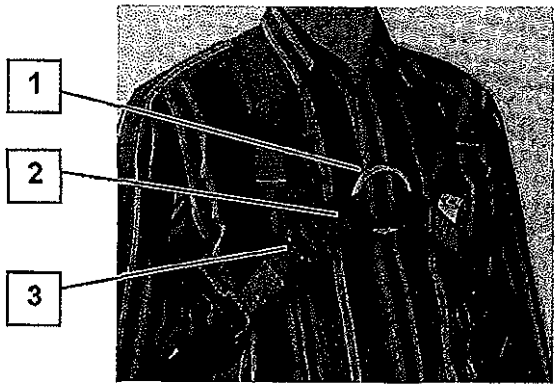

Fig. 4 Fastened safety harness (example)

1 Sternal fall-arrest eyelet
2 Right chest strap
3 Chest strap buckle

- Fasten the abdominal strap.
- Guide the leg straps through the legs from behind and lock them into the lateral buckles.

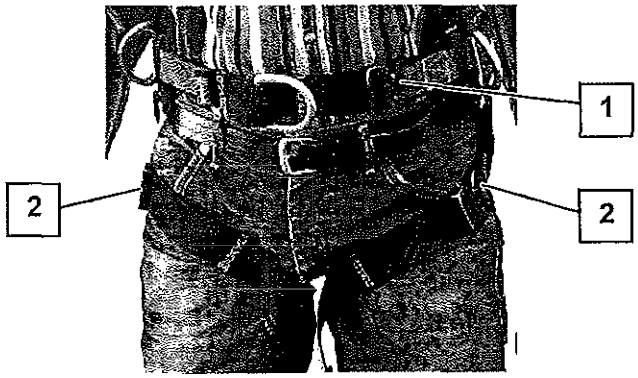

Fig. 5 Fastened safety harness (example)

1 Abdominal strap buckle
2 Leg strap buckle

- Pull all straps tight so that the safety harness fits tightly around the body.

NOTE
Rule of thumb for correct strap tension:
A flat hand may fit between strap and body, but not a fist.

7.2 Rappelling equipment

NOTE
For handling the rappelling equipment, see chapter 9.7 "Leaving the nacelle in hazardous situations".

If the service lift or the vertical ladder with the fall arrest system cannot be used for descending from the nacelle, the nacelle can be exited only by descending to the ground.

Upon owner/operator request the WT can be equipped with the rappelling equipment required for this task. This is stored sealed in a sealed aluminum box on the front part of the gearbox near the access hatch.

Service employees must carry rappelling equipment in the service vehicle. When working on the WT, the employees must take the rappelling equipment with them into the nacelle. Except for the aluminum box, this consists of the same components as the rappelling equipment for the owner/operator of the WT.

7.2.1 Equipment/accessories

The rappelling equipment consists of a transport bag, the descender with a rope corresponding to the tower height, and a 1.5 m work-positioning lanyard for attaching the descender, see Fig. 6.

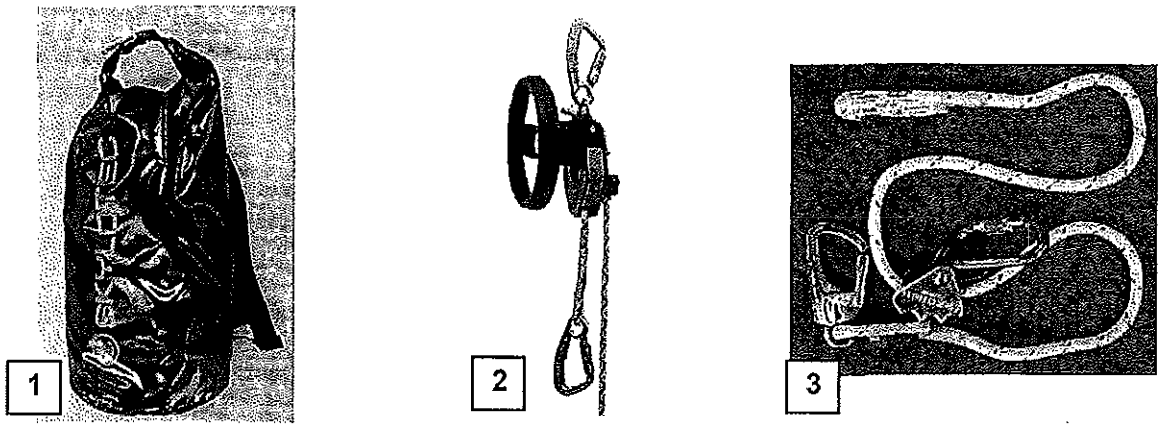

Fig. 6 Main components of the rappelling equipment

1 Transport bag
2 Descender
3 Work-positioning lanyard

The rappelling equipment also contains the following accessories, see Fig. 7:

- A U-shaped edge protection for guiding the rope over the edge of the spinner
- An edge protection for descending from the nacelle roof
- Two snap-hooks
- An ascender

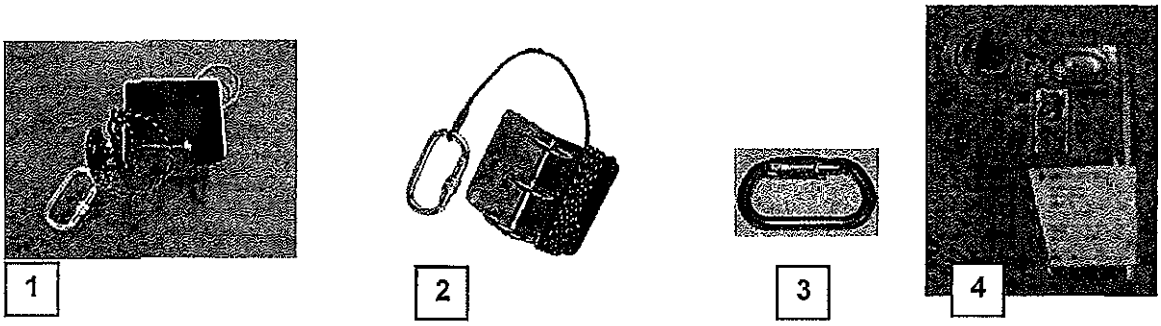

Fig. 7 Accessories for rappelling equipment

1 U-shaped edge protection
2 Edge protection for descending from the nacelle roof
3 Snap hook (2x, similar to photo)
4 Ascender

Individual pieces of equipment may differ, e.g., a webbing sling for attachment instead of a work-positioning lanyard.

7.2.2 Inspection/maintenance

In accordance with local legislation, the rappelling equipment for the Service must be inspected by a qualified person as described in the manufacturer's instructions. In Germany annual inspections are required. The optional lead-sealed descender stored in the WT is subject to a simplified inspection according to manufacturer specifications that must be performed every 12 months.

NOTE

The WT owner/operator is obliged to organize and monitor the inspection of the sealed descender deposited optionally in the WT, see chapter 4.4 "Special obligations of the owner".

7.3 Fire extinguishers

To quickly fight an incipient fire, fire extinguishers are available in the WT in the tower base and the nacelle.

The fire extinguishers must be suitable to extinguish burning solid and liquid materials and fire in electrical installations of up to 1000 V.

The number and position of the fire extinguishers are marked on the WT signs.

The WT can also be optionally equipped with a fire alarm or a fire extinguishing system.

7.4 First-aid kit

Generally, there are two first-aid kits in the WT for treating injuries:

- One in the tower base, next to the door
- One in the nacelle

8. Safety devices

The WT is equipped with various safety devices, which are particularly necessary for the safe execution of maintenance work.

8.1 Fall arrest system

The WT is equipped with a vertical ladder, provided with a fall arrest system.

Just like the PFPE, the fall arrest system must be regularly inspected by a qualified person. The owner/operator is responsible for organizing these inspections, see chapter 4.4 "Special obligations of the owner".

8.1.1 Fall arrest systems used

The *Avanti* fall arrest system with a fall arrest rail in the center of the vertical ladder is used on Nordex WTs of turbine class Delta4000.

When using the vertical ladder, only the fall arrester permitted for this fall arrest system, see Fig. 8, must be used. Only persons trained in the use of this fall arrester are permitted to use it. The fall arrester must be connected directly to the front fall-arrest eyelet of the safety harness.

Note: Refer to the operating instructions of the safety harness for which fall-arrest eyelet must be used to connect the fall arrester.

In case of a fall, the fall arrester locks in place after just a few centimeters. The delayed reaction reduces the high loads to which the falling person is subjected and their fall will be arrested safely.

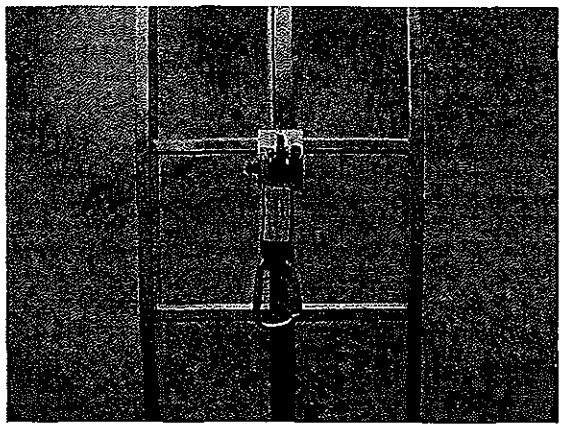

Fig. 8 Fall arrester

8.1.2 Attaching the fall arrester

The fall arrester can be opened and then attached and removed at any point on the fall arrest rail, see Fig. 10 and see Fig. 11. It is completed by an energy absorber and a snap hook, see Fig. 9.

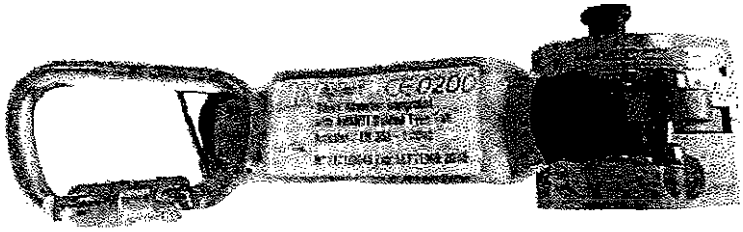

Fig. 9 Fall arrester (Avanti Eagle^{DS})

- Pull the handle and turn the lever down until the lock is released.
- Open the fall arrester: Press the right button and simultaneously pull the two parts of the runner apart.
- Attach the fall arrester to the fall arrest rail.
  Note: The arrow on the fall arrester must point upwards.
  - Laterally position the fall arrester on the fall arrest rail.
  - Lift the brake lever and place the second half of the fall arrester around the fall arrest rail.
  - Press both fall arrester halves together until the right-hand button pops out.
    Note: There is an audible click sound.

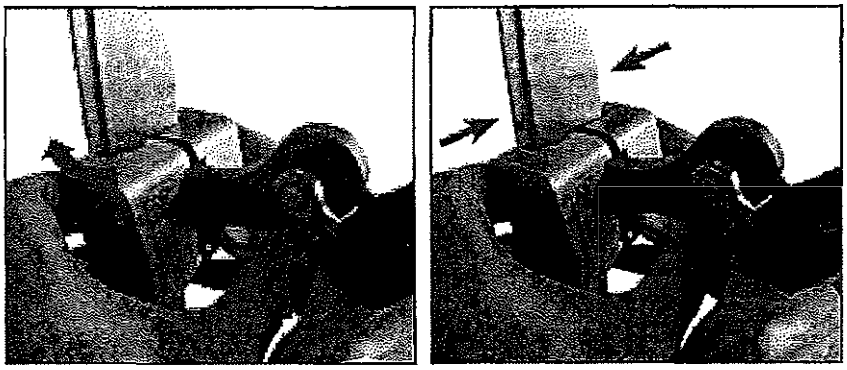

Fig. 10 Fall arrester placed against the fall arrest rail

- Pull the handle and turn the lever up until the lock locks into place.

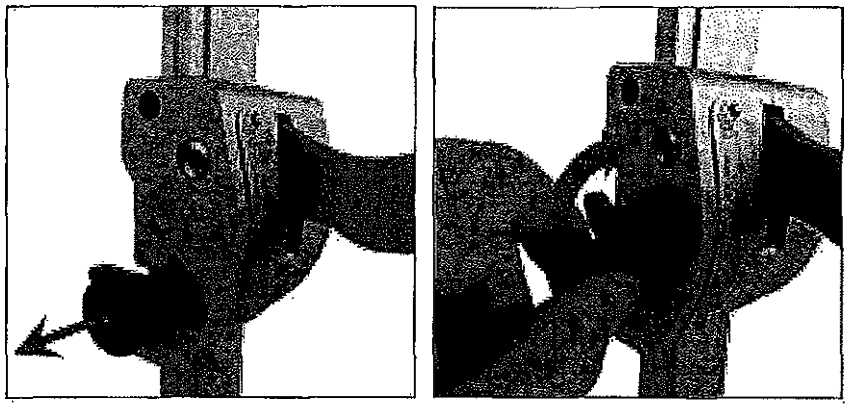

Fig. 11 Locking the fall arrester

- Check that the runner is correctly attached to the rail.
- Pull the brake lever down.
  - ► The runner is securely attached to the rail.

8.2 Rotor lock

The rotor lock reliably locks the entire drive train mechanically. It prevents risks to persons working in the nacelle and rotor hub due to the rotating parts of the drive train.

Delta4000 class WTs are equipped with a rotor lock on the rotor shaft. This consists of a bolt and the rotor lock disk, which is located on the rotor shaft. With the rotor at standstill, the bolt is inserted into one of the drill holes in the rotor lock disk.

The rotor lock must only be operated by trained specialized personnel. It is described in the WT operating instructions.

To ensure high level personal safety during work in the rotor hub and near the gearbox output shaft the rotor lock is integrated into a special key system. Only if the rotor is locked are two keys released at the locking mechanism to enable access to the rotor hub and in the area of the gearbox output shaft.

8.3 Personal attachment points

There are specific attachment points for the PFPE in the WT, to safeguard against falling from a height. These personal attachment points are indicated with yellow paint.

The lifting lugs on the gearbox can be used as additional personal attachment points in the nacelle.

8.4 Emergency stop switch

There are several emergency stop switches in the WT. They serve to stop mechanical hazards, such as the rotation of the drive train, as quickly as possible.

Actuating an emergency stop switch does not disconnect system components or the electrical energy of the WT. Electrical equipment always must be disconnected with the corresponding switchgear before performing any work on it.

Actuating an emergency stop switch triggers the safety system. An emergency pitch operation is triggered, the rotor brake applies after falling below a defined speed, and the yaw system is locked.

The emergency stop switches have a twist release. The pushbutton must be turned to the right (CW) to allow the switch to return to its original position (twist release).

To return the WT to the operational state, the safety system must be additionally reset directly on site.

The emergency stop switches can be found in the following locations:

- In the tower base to the right of the tower door
- In the following locations in the nacelle:

Fig. 12 Emergency stop switches in the nacelle

1 On the Topbox
2 On the manual control unit
3 In the ascent area to the nacelle
4 Medium voltage nacelle circuit breaker

8.5 Medium voltage circuit breaker

The nacelle also contains for emergencies only the MV shut-off switch MH. This is located near the chain storage of the electric chain hoist and designed as non-latching button.

It can be used to switch off the MV switchgear in the tower base from within the nacelle. This disconnects the WT with the exception of the pitch drives which still have a voltage supply from the batteries. The control system is also shut down with a time delay.

The WT can only be connected again by switching on the MV switchgear by a person with corresponding switching authority.

8.6 Indicating safety-relevant situations

Delta4000 class wind turbines have various visual and acoustic signaling devices that alert persons staying in the WT to safety-relevant situations. However, this signaling equipment only takes effect when the safety system is in operation and the operation mode selector switch at the Bottombox is in the position *Local* or *Stop and lock*.

The following signaling devices are available:

- A green, yellow and red signal lamp on the top tower platform
- A green, yellow and red signal lamp in the nacelle
- a green and yellow signal lamp in the rotor hub
- A horn in the tower and in the nacelle

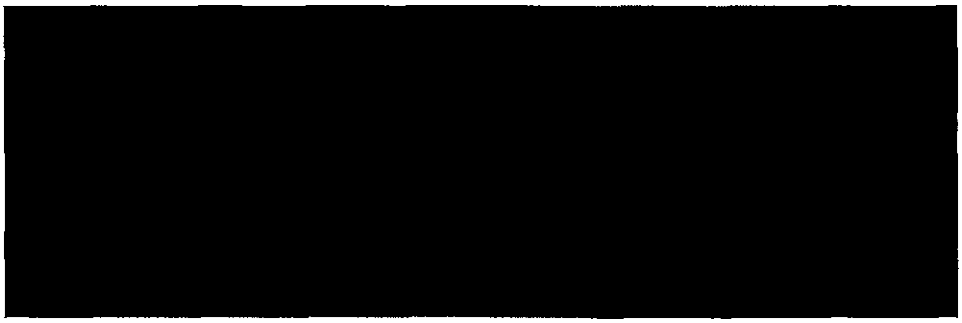

Fig. 13 Position of the signal lamps (similar to figure)

For the meaning of the individual signal patterns, refer to the following figure. The figure can also be found on a label at the Topbox in the nacelle.

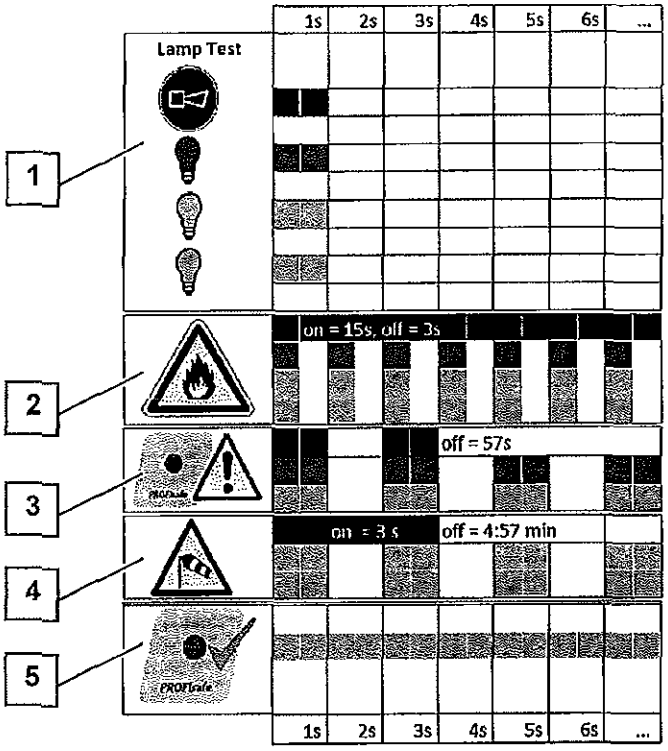

Fig. 14 *Meaning of the signal patterns*

1 Functional test
2 Fire
3 Safety-critical error
4 Too strong wind
5 Everything OK

A safety-critical error is, for example, a pressure drop on the rotor brake. Warning of too strong wind is issued if:

- The 10-minute average wind speed exceeds 9 m/s with applied rotor brake or
- The rotor speed is zero and the 10-minute average wind speed exceeds 12 m/s or
- The maximum permitted 10-minute average wind speed of 20 m/s for ascending to the WT is exceeded.

If everything is OK, the green signal lamps are constantly lit. All other signal lamps are off.

The safety-relevant situations are prioritized. Always the situation with the highest priority is indicated. However, all signal lamps flash if the statuses *Safety-critical error* and *Wind* occur at the same time.

8.7 Locking the pitch system

Safety for work in the rotor hub, particularly for tasks on the pitch drives, can be ensured through different methods, as necessary.

The supply voltage of all three pitch drives can be switched off with a switch on the center box – the service switch *+CEB=APSELESUP-SF1*.

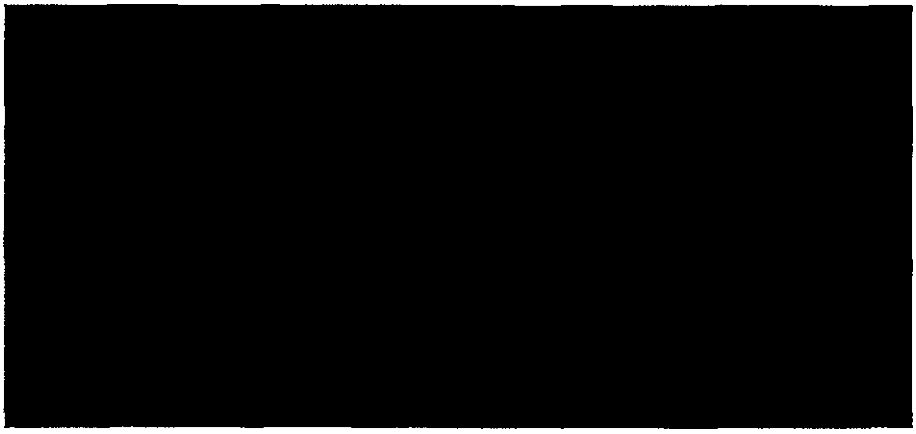

Fig. 15 Service switch (similar to figure)

When the service switch is switched off the pitch drives perform an emergency pitch operation into the 95 ° position.

To completely disconnect a pitch drive, the battery disconnector on the respective battery box also must be switched off.

To ensure reliable locking of a pitch drive, it must additionally be blocked with mechanical means.

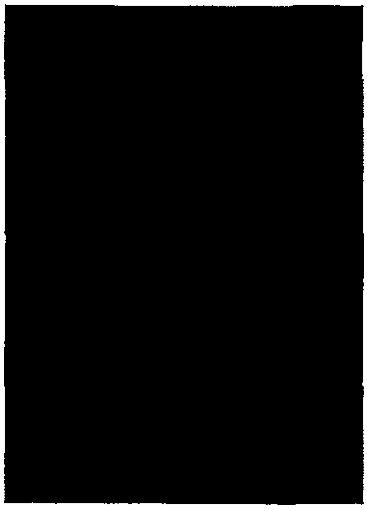

Fig. 16 Pitch locking device

To block a pitch drive the locking device is screwed into the drill hole that is protected with a red cap or a screw plug until it stops. The locking device, one per rotor hub, is stored in a bracket in the hub interior.

Certain work steps require the safe deactivation of the yaw system.

The yaw stop switch at the Topbox is used for this. Switching from *Auto* to *Stop* triggers the following:

- The "safe stop" function of the yaw drives is activated
- The electromechanical brakes of the yaw drives are disconnected so that they are applied

Manually operating the yaw drives with the manual control unit is then no longer possible.

For the safe shut-down of the yaw system, e.g. to perform work on the yaw drives, one of the yaw drives must additionally be mechanically locked. This takes place as described above, see "Locking the pitch system" on page 43.

Caution: If the green signal lamp in the nacelle or in the yaw area is not constantly lit, safe deactivation of the yaw system may be affected, see "Indicating safety-relevant situations" on page 41. In this case, the responsible employee must decide which work may have to be stopped.

8.8 Rotor hub call button

Delta4000 class wind turbines are equipped with call buttons in the rotor hub. If a call button is actuated, you can hear an acoustic signal in the nacelle. With this button, persons in the rotor hub are able to attract attention in case of emergency. This call button is located at the center box.

8.9 Rotor brake selector switch

Delta4000 class wind turbines are equipped with a "rotor brake selector switch" at the Topbox.

It is used for switching between automatic and manual operation of the rotor brake.

After switching to manual mode, the rotor brake is immediately applied and a pitch emergency run is triggered.

Now, the rotor brake can be released only with the *Release Brake* button on the manual control unit. Upon releasing the button the rotor brake is applied with the maximum braking torque.

Now the wind turbine control system can no longer access the rotor brake.

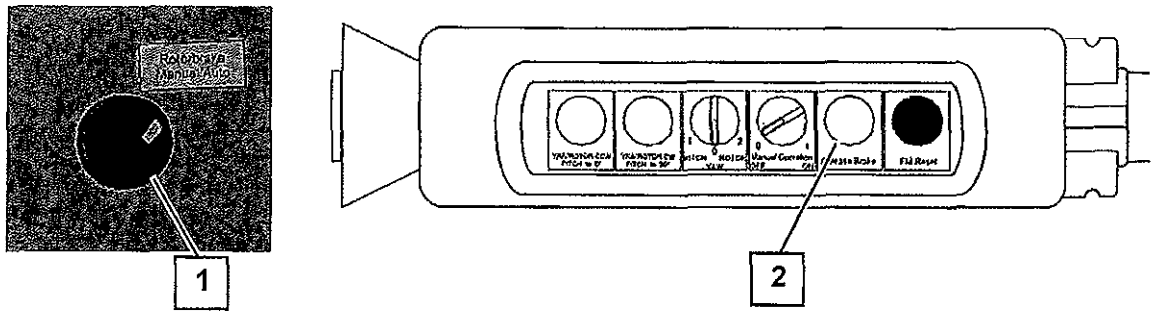

Fig. 17 Operating elements for manual rotor brake operation

1 Rotor brake selector switch on the Topbox
2 *Release brake* button on the manual control unit

Caution: If the green signal lamp in the nacelle is not constantly lit, the operation of the rotor brake may be affected, see "Indicating safety-relevant situations" on page 41 In this case, the responsible employee must decide which work may have to be stopped.

8.10 Emergency lighting

The WT is equipped with battery-powered emergency lighting in the tower and nacelle if the power supply of the WT should fail.

The emergency lighting in the tower switches on automatically after a power supply failure. The lamps flash five times at one-second intervals and then stay on for five minutes. This procedure repeats as long as the emergency lighting is activated. The status of the batteries is monitored with an LED.

The emergency lighting in the nacelle switches on automatically with a maximum delay of 15 seconds and ensures that the WT is lit for at least 30 minutes. This ensures a safe descent from the nacelle.

The emergency lighting in the nacelle can be tested with the button *Test emergency lighting* at the Topbox. The condition of the batteries in the emergency lamps in the nacelle is indicated by an LED on each light. Red means "poor" and green means "OK".

9. Behavior in specific situations

9.1 Grid failure

DANGER

Fall hazard when using the vertical ladder without sufficient lighting

After a grid failure, leave the nacelle immediately and descend to the tower base.

OBSERVE DOCUMENT

Work instructions *F010_002 Wind turbines without grid connection or with locked drive train*

In case of grid failure, the lighting in the WT is automatically switched to emergency lighting. Emergency lighting is ensured for at least 30 minutes.

If there is a grid failure during service work on the WT, and if it cannot be foreseen when the power supply will be restored, proceed as follows:

- Stop all work in the rotor hub and nacelle.
- Proceed as described in the work instructions *F010_002*.
- Descend to the tower base.
- Inform the responsible Remote Monitoring.

9.2 Thunderstorm

DANGER

Life-threatening injuries due to lightning strike

In case of an approaching thunderstorm, leave the WT or do not enter it.

Once the thunderstorm has passed, be aware of crackling noises as you approach the WT, as these are a result of electrostatic charging.

Enter the WT only when these noises have stopped.

A WT is at high risk from lightning strikes.

The WT itself is adequately protected against damage by comprehensive lightning protection measures. However, persons inside or in the proximity of a WT are still at risk.

- Stop all work in the rotor hub and nacelle.
- Descend to the tower base.
- Leave and lock the WT.

- Leave the wind farm.
- Wait in a vehicle at a safe distance from the WT – approx. 1 km – until the thunderstorm has passed.
- Wait one hour after the thunderstorm has passed before entering the WT.

9.3 Fire

⚠ DANGER

Life-threatening injuries due to falling turbine parts

In case of a fire in the tower, in the nacelle or on the rotor, parts may fall off the WT.

Keep a safety distance of 500 m around the WT.

Do not enter the WT.

⚠ DANGER

Risk of death when using the service lift in case of fire

Do not use the service lift in the event of a fire in the WT.

NOTE

The WT is equipped with fire extinguishers for fighting incipient fires.

At least one fire extinguisher is located in the tower base near the door and another in the nacelle near the Topbox.

This makes it possible to extinguish burning solids and liquids, as well as fires in electrical systems of up to 1000 V.

These fire extinguishers are not suitable for extinguishing a fire on the high-voltage elements, see chapter 9.3.2 "Fire in the nacelle".

9.3.1 Fire in the WT

- Remove any persons from the danger area.
- The burning object must be disconnected from the grid, if possible.

[redacted]

- Call the Nordex emergency phone number and describe the situation.

9.3.2 Fire in the nacelle

DANGER

Risk of death from incorrect attempts to extinguish fires

Parts of the converter and the MV transformer are under high voltage.

Where possible CO_2 extinguishers should be used with an adequate safety distance (3 m for up to 30 kV).

The use of powder extinguishers near high voltage equipment should be avoided.

- Vacate the danger area immediately.
- Immediately disconnect the WT from the grid (if possible safely).
  |In the nacelle the medium voltage isolator at the chain box of the electric chain hoist may be used for this purpose.
- If this is not possible, inform the responsible power utility that the WT is to be disconnected from the grid.
- Evacuate the WT.
- Call the fire department.
- Call the Nordex emergency phone number and describe the situation.

9.4 Accident

- Remain calm.
- Take care of your own safety.
- Take action to prevent further casualties.
- Rescue casualties from the danger area.
- Perform first-aid.
- The rescue service must be informed.
- Call the Nordex emergency phone number and describe the situation.

Electrical accidents

- Immediately disconnect the voltage in the WT.
  Note: If this is not possible, the power utility must be informed to disconnect the WT.
- Only use non-conductive devices for any rescue attempts.
- Continuously check the consciousness and breathing (circulation) of casualties.
- Always seek medical treatment, even after minor electrical accidents.

9.5 Oil spill

WARNING

Injuries due to slipping on oil-polluted surfaces

Move particularly carefully and, where possible, avoid stepping on oil-polluted surfaces.

- Stop the WT.
- Inform the responsible Remote Monitoring.

Further measures, to be carried out by service employees only

- Locate the leak.
- Where possible, seal the leaks or redirect the flow of oil.
- Professionally remove any escaped oil.
- Replace damaged parts.
- Remove any contamination.
- If oil has penetrated into the soil, inform the responsible local authorities and agree further measures with them.

9.6 Earthquake

If the WT is located in an area with earthquake hazard, the following rules of conduct must be observed.

Earthquakes during work on the WT

- Immediately leave the WT.
- Wait at a safe distance until the end of the earthquake.
- Do not re-enter the WT until it has been checked for damage and no safety risk has been identified.

After an earthquake

- Stop the WT.
- Check the WT, particularly the tower and foundation, for external damage.
- Inform the responsible remote monitoring, and agree further procedure with them.

9.7 Leaving the nacelle in hazardous situations

There are various escape routes out of the nacelle:

- Descending inside the tower via the vertical ladder
  Warning: Do not use the service lift during a fire or an earthquake.
- Descending from the nacelle roof
- Descending directly from the nacelle
- Descending from the rotor hub

These been described in the escape and rescue plan. The rescue and evacuation plan is located in the tower base and in the nacelle of the WT.

A rescue concept for leaving the nacelle and for rescuing casualties in hazardous situations was developed for Nordex employees. If not already required by law, the owner/operator of the WT should develop a specific safety concept for themselves and any accompanying person in the WT, which is used particularly in cases of emergencies.

Thus, the following chapters give only some turbine-specific information on descending from the nacelle.

⚠ DANGER

Risk of life-threatening injuries from rotating rotor

Before descending, ensure that the rotor and yaw system have been locked.

9.7.1 Descending directly from the nacelle

Descending directly from the nacelle is done through the transport hatch in the nacelle rear.

⚠ DANGER

Fall hazard during descender attachment

Secure yourself to a personal attachment point near the transport hatch before attaching the descender.

Attach the descender or descent rope to a PAP above the crane hatch.

The hatch of the nacelle housing below the transport hatch is opened with the pull mechanism. To this end the railing must be closed at both ends.

9.7.2 Descending from the nacelle roof

⚠ DANGER

Fall hazard while staying on the nacelle roof

Immediately secure yourself to one of the personal attachment points after stepping onto the roof.

WARNING

Risk of injury from lightning rods

There are lightning rods on the exterior of the nacelle. Avoid these areas during descending.

The descender or descent rope can be attached directly to one of the personal attachment points on the roof with the snap hook.

Use the L-shaped edge protection from the rappelling equipment to protect the nacelle housing from the running rope. Secure the edge protection against falling down with the safety rope in a suitable location.

Fig. 18 L-shaped edge protection

9.7.3 Descending from the rotor hub

Attach the rappelling device and descender or descent rope to a personal attachment point above the rescue hatch, above the head where possible.

To open the rescue hatch, loosen the six clamping nuts by hand.

Use the U-shaped edge protection from the rappelling equipment to protect the cable if the cable runs along the spinner. Secure the edge protection against falling down with the safety rope in a suitable location.

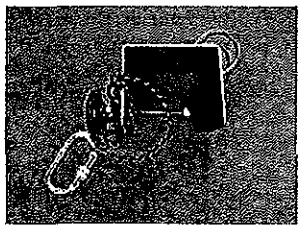

Fig. 19 U-shaped edge protection

9.7.4 Descending a casualty from the nacelle

During descent of a casualty, please observe the following instructions:

- Always call for external help such as an ambulance or emergency services via the respective emergency number.

- Descend the casualty with the rescue devices that are available on the WT only if the person can be transported whilst hanging in the safety harness. This means that the person has not suffered any serious injuries (e.g. on head or spine) or any internal injuries.

  Otherwise, a high altitude rescue team must be called who is able to transport the casualty in a lying position.

- If conscious, ask the casualty to move the legs during descent (if possible) in order to maintain blood circulation and to prevent a suspension trauma.

- Symptoms of a suspension trauma are:
  - *Numbness of the legs, similar to feet that "fell asleep"*
  - Pallor, sweating, shortness of breath
  - Dizziness, blurred vision and restriction of the blood circulation, eventually leading to fainting

- If a suspension trauma is suspected, place the casualty into a sitting position, see Fig. 20, or – if unconscious – into recovery position with extremely bent legs. Loosen the safety harness at the chest, open the leg straps only slowly.

⚠ DANGER

Risk of death from suspension trauma

Do not place the casualty in shock position if a suspension trauma is suspected.

Fig. 20 Casualty in a sitting position

- After approx. 20 minutes, slowly stretch the casualty's legs and, if possible, place him/her in a horizontal position.

- Transfer the casualty to the ambulance for medical care.

- Inform the ambulance explicitly about the suspected suspension trauma.

10. Ascending inside the tower

⚠ WARNING

Ascending into the nacelle is permitted only if the following conditions are met:

- 10-minute average wind speeds up to 20 m/s
- A second person is present

10.1 Preparing for the ascent

⚠ DANGER

Fall hazard from a faulty PFPE

A PFPE either with an invalid inspection label/inspection record, or which has been damaged or strained by a fall, must no longer be used.

Immediately replace the PFPE and have it checked by a qualified person.

- Inform the responsible Remote Monitoring about the intended ascent.
- Stop the WT.
- Disable remote access to the WT.

  Note: For this, switch the operation mode selector switch on the Bottombox to *Local mode* or to *WTG stop and lock*, see also the turbine's operating instructions.
- Test the emergency lighting in the tower.

  If two consecutive emergency lamps are defective these must be repaired before ascending into the nacelle.
- Remove any loose objects from pockets and clothing and leave them behind in the tower base or secure them from falling down during the ascent.
- Ensure that the inspection labels or records of the PFPE are valid and the PFPE has not been damaged.
- Put on the safety harness as described under "Safety equipment", see chapter 7.1.3 "Handling the safety harness".
- Visually inspect the vertical ladder and fall protection system, ensure that there is no visible damage and check that the inspection label/inspection record is valid.
- Thoroughly remove any contamination on the fall arrest system, especially oil and lubricant.
- If the inspection label/inspection record of the vertical ladder has expired or damage is visible, block the vertical ladder from any use.

DANGER

Fall hazard

Vertical ladders with invalid inspection label, invalid inspection record or visible damage must not be used.

- Owner/operator:
  - Have a qualified person rectify any damage to the vertical ladder and release the vertical ladder.

  Service employees:
  - Cancel the maintenance.
  - Inform the owner/operator.

10.2 Using the vertical ladder

DANGER

Hazard of falling from the vertical ladder in the case that the service lift is used at the same time

If a service lift is available it must always be used for ascending and descending the tower. Use the vertical ladder only if the service lift is not in operation.

10.2.1 Using the vertical ladder with a fall arrest system

DANGER

Fall hazard due to unsecured use of the vertical ladder

The vertical ladder must be used only while wearing the PFPE, while secured with the fall arrester permitted for the respective fall arrest system, and while carrying the lanyard with energy absorber.

DANGER

Fall hazard resulting from overload on the fall arrest system

Note that the number of persons allowed to use the vertical ladder at the same time may be restricted. Refer to the user manual.

DANGER

Fall hazard due to incorrect use of the vertical ladder

Do not allow your full body weight to rest in the fall arrester during the ascent. Always have at least three points in contact with the vertical ladder: two feet and one hand or two hands and one foot.

NOTE

- Wear safety gloves during the ascent.
- Always access platforms from the left side of the vertical ladder. A personal attachment point is located only here.
- The vertical ladder has a foldable rest platform about every 9 m.

- Attach the fall arrester approved for the respective fall arrest system to the front fall-arrest eyelet and secure it.
- Attach the fall arrester to the fall arrest system, see "Attaching the fall arrester" on page 37.
- Check whether the fall arrester works properly.
- Check the personal protective equipment for correct fit and perform a suspension test.
- Make sure that there is no other person on the vertical ladder in the section up to the next platform.

  Otherwise, wait until the other person has reached the next platform.
- Start the ascent.
- During the ascent, keep checking regularly if the vertical ladder and the fall arrest system are fully functional and do not show any signs of damage or contamination.

DANGER

Fall hazard due to unsecured leaving of the vertical ladder

Before detaching the fall arrester from the fall arrest rail, always attach the lanyard with fall arrester to a suitable attachment point. Before releasing the energy absorber secure yourself to a personal attachment point of the tower platform.

10.2.2 Using the vertical ladder without fall arrest system

DANGER

Fall hazard due to unsecured use of the vertical ladder

If the fall arrest system is not available, use a lanyard with energy absorber for securing.

Attach the lanyard to the ladder upright. Solely the ladder rungs are not suitable as attachment point.

If the vertical ladder must be used without the fall arrest system being available (e.g. during erection), the persons using the vertical ladder must be secured using the lanyard with energy absorber of the PFPE.

Proceed as follows:

- Start the ascent.
- At a height of about 1 m, connect one end of the lanyard with energy absorber to a ladder upright as high as possible.
- Only climb the vertical ladder so far that you can still reach the first snap hook of the lanyard.
- Attach the second snap hook of the lanyard as high as possible on the vertical ladder upright.
- Release the first snap hook of the lanyard.
- Move further up the vertical ladder, as described, and always secure yourself with at least one of the two lanyard snap hooks.

10.2.3 Leaving the vertical ladder

DANGER

Fall hazard due to unsecured leaving of the vertical ladder

To access a platform from the vertical ladder, always step off the vertical ladder to the left. A personal attachment point is available only on this side.

- Before leaving the vertical ladder, attach the lanyard with the energy absorber to the personal attachment point on the left at the tower wall.
- *Remove the fall protection from the vertical ladder.*

  If using a fall arrester, remove it from the rail and take it along.
- Step off the vertical ladder to the left-hand side, onto the platform.

10.3 Using the service lift

DANGER

Risk of death from a service lift fall

Do not use the service lift in case of technical defects.

Before using the service lift for transporting persons or material, ensure the following:

- The service lift has been fully commissioned.
- The authorized inspection agency has approved the lift for the particular country. This also applies for the erection of the WT.
- All required service lift maintenance tasks were completed on schedule and documented.
- The included logbook is reviewed and updated.

DANGER

Risk of death when using the service lift in case of fire

Do not use the service lift in the event of a fire in the WT.

DANGER

Hazard of falling from the vertical ladder in the case that the service lift is used at the same time

If a service lift is available it must always be used for ascending and descending the tower. Use the vertical ladder only if the service lift is out of order.

DANGER

Fall hazard due to unsecured use of the service lift

In the service lift cage, always secure yourself by attaching the lanyard with energy absorber to one of the personal attachment points.

WARNING

Functional failure in heavy frost

The service lift is approved for temperatures down to -20 °C and -35 °C (CCV).

WARNING

Injuries and damage to components due to incorrect operation

The service lift must be used only by persons who have successfully completed the manufacturer's training on *service lift operation.*

Always operate the service lift together with a second person or ensure that there is a person with a descender above the service lift, to carry out any necessary rescue operations.

NOTICE

Damage to components due to objects in the operating area of the service lift

Before and while using the service lift, always ensure that the operating area of the service lift is clear.

To use the service lift, proceed as follows:

- If not already done, perform and document the daily checks of the service lift.
  Note: The inspection plan and report are in the service lift.
- Check the support structure of the lift cabin for damage.
- If irregularities were detected during the above checks.
  - Immediately block the service lift from use.
  - **Service employees:** Prepare a non-conformity report.
    Customer: Inform the wind farm management. Indicate the serial number of the service lift.
- Before using the service lift, familiarize yourself once more with its operation, particularly in the event of a fault, using the operating instructions that are provided on site.
- If the service lift is found correct enter the lift cage. Take along a fall arrester that is approved for the respective fall arrest system of the vertical ladder.
- Attach the lanyard with energy absorber to one of the personal attachment points in the service lift cage.
- Start the service lift.

10.4 Entering the nacelle

The service lift and vertical ladder end at the tower platform below the top tower platform, on the lift platform. The top tower platform can be reached by climbing another short vertical ladder.

- When the service lift reaches the *service lift platform*, open the door and attach yourself to the personal attachment point at the tower wall.

- Release yourself from the personal attachment point in the service lift and then open the railing door.
- Exit the service lift.
- Climb the vertical ladder to the top tower platform with the aid of the fall arrest system.

  For using the vertical ladder with fall arrest system see "Using the vertical ladder" on page 54.
- Secure yourself to the personal attachment point (PAP) near the hatch and release the fall arrester from the fall arrest system.
- Exit the vertical ladder.
- Close the hatch.
- Release yourself from the PAP.
- Ascend into the nacelle.

11. Revision index

Rev.	Date	Reason for revision	AST	Author
[redacted]	[redacted]	[redacted]		[redacted]
[redacted]	[redacted]	[redacted]		[redacted]

© 2018 by Nordex Energy GmbH

Nordex Energy GmbH
Langenhorner Chaussee 600
22419 Hamburg
Germany
http://www.nordex-online.com
info@nordex-online.com

© 2018 by Nordex Energy GmbH

Release Page:

Document title:	**Rules of conduct on, in and around wind turbines**

[redacted]

This page is part of the document Rules of conduct on, in and around wind turbines, Rev. 1/2018-08-20 with 63 pages.
Document has been electronically created and released.

Attachment 4

GE Renewable Energy

GE Renewable Energy

- Original Document -

Technical Documentation Wind Turbine Generator Systems 3MW and Cypress Platform - 50/60 Hz

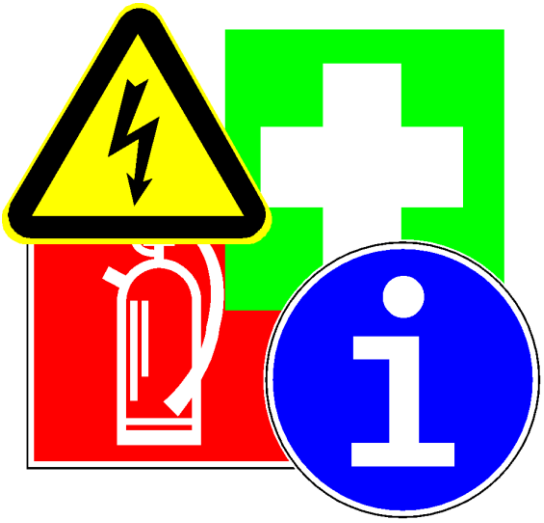

Safety Manual

Applicable for Wind Turbine Generators with 100, 103, 117, 120, 130, 137, 158 and 164 m Rotor Diameter

Rev. 09 - Doc-0074072 - EN 2020-09-21

imagination at work

© 2020 General Electric Company. All rights reserved.

GE Renewable Energy

- Original Document -

Visit us at
www.gerenewableenergy.com

IMPORTANT

Read this manual carefully before use.

Keep the manual for future consultation.

All technical data is subject to change in line with ongoing technical development!

Copyright and patent rights

All documents are copyrighted within the meaning of the Copyright Act. We reserve all rights for the exercise of commercial patent rights.

© 2020 General Electric Company. All rights reserved.

This document is public. GE and the GE Monogram are trademarks and service marks of General Electric Company.

Other company or product names mentioned in this document may be trademarks or registered trademarks of their respective companies.

imagination at work

Table of Contents

1 Basic Information on the Technical Documentation for Wind Turbine Generator Systems 7
1.1 Explanation of Abbreviations 7
1.2 Applicability 8
2 General Safety Principles 9
2.1 Personnel Groups 9
2.1.1 Qualified Persons 10
2.1.2 Technically Competent Persons 10
2.1.3 Experienced Persons 10
2.1.4 Experts 10
2.2 Proper Use 11
2.3 General Information 11
3 Marks, Signs and Symbols. 12
3.1 Danger Classifications and Symbols 12
3.2 Marks and Signs attached by GE Renewable Energy 13
3.3 Signs to be attached by the Operator/Owner 13
4 Information for the Operator/Owner of the Wind Turbine Generator System 14
5 Safety Equipment 15
5.1 Personal Protective Equipment 15
5.1.1 Safety Harness 19
5.1.2 Wire Grab Fall Arrestor 20
5.1.3 Slider Hook 21
5.2 Protective Equipment for Measurements on Live Components 22
5.2.1 PDP – Power Distribution Panel 22
5.2.2 Converter and TPIC 22
5.3 Hooking Points 23
5.4 Abseiling Device 24
5.4.1 Abseiling from the Roof of the Nacelle 25
5.4.2 Care and Maintenance of the Abseiling Device 26
5.5 Fire Extinguishers (optional feature) 27
5.6 First Aid 29
6 Safety Devices 30
6.1 Emergency Stop Pushbuttons 30
6.2 Rotor Locks 31
6.2.1 Rotor Lock on the High-speed Shaft 33
6.2.2 Rotor Lock on the Low-Speed Shaft (LSS) 33
6.3 Emergency Lighting 37
7 Residual Risks 38
7.1 Special Dangers – Electric Power 39
7.2 Special Dangers – Hydraulic System 40
7.3 Special Dangers - Noise 40
7.4 Special Dangers – Icing 42
7.4.1 Ice Build-up on the Rotor Blades 42
7.4.2 Icy Condition of the Access Route 43
7.4.3 Icy Condition of the Tread of the Steps outside the Nacelle 43
7.5 Exceptional Dangers – Earthquakes 43
8 Safety Information for Individual Plant Components 44
8.1 Doors and Hatches 44
8.2 Pre-Assembled Power Module (PPM) 3 MW platform ONLY 44
8.2.1 4-Level PPM 44

PUBLIC – May be distributed external to GE for permitting purposes only.
UNCONTROLLED when printed or transmitted electronically.
© 2020 General Electric Company and/or its affiliates. All rights reserved.

8.2.2 3-Level PPM 3 MW platform ONLY ... 46
8.2.3 2-1/2 Level PPM 3 MW platform ONLY ... 50
8.3 Medium-Voltage Switch Gear ... 53
8.4 Uptower Electrical System (Cypress platform only) ... 54
8.5 Transformer ... 55
8.6 Low Voltage Main Distribution and Main Control Panel/MCPD ... 55
8.7 Frequency Converter ... 56
8.8 Nacelle ... 57
8.9 Anemometer and Wind Vane ... 58
8.10 Pitch Electrical Control Cabinets Inside the Hub – Axis and Battery (3MW) Ultracaps (Cypress platform) ... 59
9 Conduct in Emergency Situations ... 60
9.1 Conduct in Case of Fire ... 60
9.1.1 Fire-Fighting ... 61
9.1.2 Fire in the Tower - Person in the Nacelle ... 61
9.1.3 Fire in the Nacelle - Person in the Nacelle ... 61
9.1.4 Fire in the Transformer ... 62
9.2 Escape Routes ... 62
9.2.1 First Escape Route ... 62
9.2.2 Second Escape Route ... 62
9.2.3 Escape Plan ... 63
9.3 Information for Rescue and Emergency Personnel ... 63
9.4 Oil Spill – Immediate Measures ... 63
10 Staying in the Wind Turbine Generator System ... 65
10.1 Approaching and Entering a Frosted Wind Turbine Generator System ... 66
10.2 Shut-down of the Wind Turbine Generator System ... 67
10.3 Climbing the Tower ... 68
10.4 Deactivation of the Yaw Drive ... 70
10.5 Entering the Nacelle ... 70
10.6 Nacelle Walkway and Working Platforms ... 71
10.7 Walking on the Roof of the Nacelle ... 71
10.8 Entering the Rotor Hub ... 72
10.9 Activation of the Wind Turbine Generator System ... 73
11 Information on Maintenance and Troubleshooting ... 74
11.1 Hot Work ... 75
11.1.1 Scope ... 75
11.1.2 Preparation ... 76
11.1.3 Documentation ... 77
12 Power Disconnection and Isolation Procedures (Lockout/Tagout Instructions) ... 78
12.1 Identification of Installations, Processes, Circuits ... 78
12.2 Preparation for Shutdown/Notification of Affected Employees ... 78
12.3 Identification of Energy Sources and Strengths ... 78
12.4 Deactivation of Energy Sources and the Mounting of Energy Control Devices ... 79
12.5 Control of Stored Energy ... 79
12.6 Verification of Isolation ... 79
13 Reconnection of the Installation to the Supply ... 80
ANNEX: Items and Installations which are subject to Inspection pursuant to the Accident Prevention Regulations ... 81

PUBLIC – May be distributed external to GE for permitting purposes only.
UNCONTROLLED when printed or transmitted electronically.
© 2020 General Electric Company and/or its affiliates. All rights reserved.

Table of Figures

Fig. 1: Ladder champs 16
Fig. 2: Ladder brackets 17
Fig. 3: Fall arrest components 17
Fig. 4: Tie off 18
Fig. 5: Welded boss 18
Fig. 6: Usage of the wire grab fall arrestor (example) 20
Fig. 7: Usage of the slider hook (example) 21
Fig. 8: Hooking point on the swinging gallows 23
Fig. 9: Equipment bag 24
Fig. 10: Abseiling device in the equipment bag 25
Fig. 11: Abseiling device 25
Fig. 12: Fire extinguisher – An example 28
Fig. 13: Emergency stop pushbutton 30
Fig. 14: Securing the HSS rotor lock with LOTO 33
Fig. 15: Checking the alignment 34
Fig. 16: Mechanical rotor lock actuation 34
Fig. 17: Securing the LSS rotor lock - 3 MW 35
Fig. 18:: Securing the rotor lock – Cypress turbines 35
Fig. 19: Foam ear protection 41
Fig. 20: Ear muffs (ear cups) 41
Fig. 21: Ear muffs integrated in hard hat 41
Fig. 22: Hatch converter level with extracted railing 48
Fig. 23: Locking the railing with the hatch bar 48
Fig. 24: Bolting the hatch bar to the console 49
Fig. 25: Hatch bar placed at the console column 49

PUBLIC – May be distributed external to GE for permitting purposes only.
UNCONTROLLED when printed or transmitted electronically.
© 2020 General Electric Company and/or its affiliates. All rights reserved.

THIS PAGE IS LEFT INTENTIONALLY BLANK TO FACILITATE BINDING

1 Basic Information on the Technical Documentation for Wind Turbine Generator Systems

This Safety Manual is a constituent part of the technical documentation for wind turbine generator systems. In the case of offshore plants, the supplementary safety information for offshore plants is also to be considered.

The safety manual must be read and understood by the operating and maintenance personnel and the owner, in order to guarantee safety in and on the wind turbine generator system and to prevent accidents and personal injuries.

In addition to the safety manual, the respective specific safety information in the technical documentation, in which e.g. installation or maintenance is described, must always be read.

The basic rules of conduct for safe working in and on the WTGS are described in this Safety Manual.

Any unclear points in the technical documentation which may jeopardize the correct performance of work in or on the WTGS must first of all be clarified. Contact GE Renewable Energy for advice if necessary.

In addition to the safety manual, the local safety and accident prevention regulations must be complied with to ensure the safety of personnel.

1.1 Explanation of Abbreviations

ANSI	American National Standards Institute
BTP	Build to print
CAE	Converter AC Entry Cabinet
CBC	Converter Bridge Cabinet
CCC	Converter Control Cabinet
CDF	Converter Distortion Filter Cabinet
CHX	Converter Heat Exchanger Cabinet
CIC	Converter Inductor Cabinet
CSA	Canadian Standards Association
DFIG	Doubly-fed Induction Generator
DIN	Deutsche Industrienorm (German Industry Standard)
EHS	Environment, Health and Safety
HSS	High Speed Shaft
LSS	Low Speed Shaft
MCC	Main Control Cabinet/
MCPD	Main Control & Power Distribution Cabinet
NFPA	National Fire Protection Association

PUBLIC – May be distributed external to GE for permitting purposes only.
UNCONTROLLED when printed or transmitted electronically.
© 2020 General Electric Company and/or its affiliates. All rights reserved.

OSHA	Occupational Safety and Health Agency
PDP	Power Distribution Panel
PMG	Permanent Magnet Generator
PPE	Personal Protective Equipment
PPM	Pre-Assembled Power Module
TPIC	Thread Power Interface Cabinet
USV	Uninterruptible Power Supply
VDE	Verband deutscher Elektrotechniker (German Association of Electricians)
WTGS	Wind Turbine Generator System
SFT	Space Frame Tower

1.2 Applicability

The document is applicable to the 3MW Platform (turbines with rotor diameters of 100, 103, 117, 120, 130 and 137m). and the Cypress Platform (turbines with rotor diameters of 158 and 164m). In some cases, sections within this document will be applicable only to the 3MW Platform or the Cypress Platform and will be noted as such.

In some cases, sections within this document will be applicable only to the Permanent Magnet Generator (PMG) or the Double Feed Induction Generator (DFIG) and will be noted as such.

PUBLIC – May be distributed external to GE for permitting purposes only.
UNCONTROLLED when printed or transmitted electronically.
© 2020 General Electric Company and/or its affiliates. All rights reserved.

2 General Safety Principles

The Wind Turbine Generator System (WTGS) has been built according to the state-of-the-art and the recognized safety rules.

Hazards for the user or third parties and impairment of the wind turbine generator system and other property may nevertheless arise during the use of this facility if it is

- operated by untrained or uninstructed staff
- not used properly
- improperly maintained or serviced

The owner / operator responsible for the WTGS must ensure that

- The safety manual and the operating manual are available and are complied with
- The service conditions and technical data are complied with
- The protective devices are used
- The prescribed maintenance work is carried out
- The maintenance personnel is immediately informed or the plant immediately shut down if higher temperatures, noise, vibration, etc. compared to operation at normal rating should occur.

The operating manual contains the information required for operation of the WTGS by qualified personnel.

The warranty of the manufacturer is only provided if the currently valid operating manual is observed and complied with.

NOTE

Take precautions against malfunctions and thereby prevent personal injury or death and material damage!

2.1 Personnel Groups

Different personnel groups are specified for carrying out the various tasks in and on the WTGS. Before work is started, it must be ensured that the personnel in question have the requisite qualifications to carry out the respective tasks. If necessary, suitable training or qualification measures are required, or other personnel with a suitable qualification carry out the work.

PUBLIC – May be distributed external to GE for permitting purposes only.
UNCONTROLLED when printed or transmitted electronically.
© 2020 General Electric Company and/or its affiliates. All rights reserved.

2.1.1 Qualified Persons

Work on electrical equipment and machinery may only be carried out by qualified persons who are familiar with the current applicable safety and installation regulations. The qualified persons must be authorized to carry out the requisite tasks by the person responsible for safety in the WTGS under the health and safety regulations. A qualified person is a person who:

- has appropriate training and experience
- is familiar with the currently applicable standards, regulations and accident prevention regulations and generally recognized code of practice
- has been instructed in the operating principle and service conditions of electrical and mechanical drive systems and
- can recognize and avoid dangers.

NOTE

Unqualified persons may not be deployed!

2.1.2 Technically Competent Persons

Technically competent persons are persons who have the requisite technical knowledge for the inspection of work equipment as a result of their professional training, their professional experience and their current professional activity.

2.1.3 Experienced Persons

An experienced person is someone who, on the basis of his technical training and experience, has gained adequate knowledge in the particular field of the equipment/device to be tested and who is acquainted with the pertinent national industrial safety legislation, the regulations for the prevention of accidents, directives and generally accepted engineering standards (DIN standards, VDE regulations, technical rules of other member states of the European Union or other contracting states of the agreement concerning the European Economic Area as well as OSHA/ANSI/NFPA/CSA standards and regulations for North America)) to the extent that he is able to assess the safe working order of the equipment/device concerned.

2.1.4 Experts

Experts are persons who are familiar with the relevant industrial safety regulations, directives and generally recognized code of practice and can verify and authoritatively assess the presence of threats and dangers.

PUBLIC – May be distributed external to GE for permitting purposes only.
UNCONTROLLED when printed or transmitted electronically.
© 2020 General Electric Company and/or its affiliates. All rights reserved.

2.2 Proper Use

The Wind Turbine Generator Systems are intended solely for the generation of electrical power by means of wind energy.

Any other use or use extending beyond this is deemed to be improper. The operator / owner of the WTGS bears the sole responsibility for any damage resulting there from.

The same also applies to any unauthorized modifications made to the WTGS. As a general principle, modifications to the WTGS may be carried out only after consultation with GE Renewable Energy, in order to guarantee the safety and the correct functioning of the WTGS.

Proper use also includes compliance with the information on

- Safety
- Operation
- Service and maintenance

Provided in the technical documentation of the WTGS.

2.3 General Information

The wind turbine generator system may only be used in a technically perfect condition in line with the technical documentation. In addition, it must be used as intended, as well as with safety in mind and with an awareness of the dangers. Any malfunctions, particularly those that could impair safety, must be reported and remedied immediately.

Anybody who has been authorized to carry out erection, commissioning, operation or maintenance work must have read and understood the complete O&M Manual, in particular the Safety Manual.

It is too late to read the manual while carrying out the work. This applies especially to personnel who are only occasionally deployed on the wind turbine generator system.

The O&M Manual must be readily available at the site of operation of the wind turbine generator system at all times. It is kept in the main cabinet of the WTGS.

The relevant regulations for the prevention of accidents (see "Information for the Operator" in "Basic information regarding the operating instructions manual") and any other generally recognized safety and industrial health regulations must also be complied with.

We cannot be held liable for any damages or accidents as a result of non-compliance with the operating instructions, the relevant regulations for the prevention of accidents or any other generally recognized safety and industrial health regulations.

Responsibilities for the different activities within the framework of operation, service and maintenance of the WTGS must be clearly defined and complied with. This is the only way to prevent mistakes, particularly in dangerous situations.

PUBLIC – May be distributed external to GE for permitting purposes only.
UNCONTROLLED when printed or transmitted electronically.
© 2020 General Electric Company and/or its affiliates. All rights reserved.

The instructions for

- Shutting down the WTGS
- Maintenance work
- Handling the rotor lock
- Possible confined space entry (e.g. entering the rotor hub, entering the transformer level)

Must be followed during the inspection, maintenance and repair of the wind turbine generator system and the safety devices.

3 Marks, Signs and Symbols.

3.1 Danger Classifications and Symbols

The following danger classifications and symbols are used in the technical documentation of the wind turbine generator systems:

DANGER

This signal word is used to indicate an imminently hazardous situation which, if not avoided, **will** result in **death or serious injury**.

WARNING

This signal word is used to indicate a potentially hazardous situation which, if not avoided, **could** result in **death or serious injury**.

CAUTION

This signal word is used to indicate a potentially hazardous situation which, if not avoided, **could** result in **minor or moderate injury**.

NOTICE

This word is used to address practices **not related to physical injury**.

PUBLIC – May be distributed external to GE for permitting purposes only.
UNCONTROLLED when printed or transmitted electronically.
© 2020 General Electric Company and/or its affiliates. All rights reserved.

NOTE

Notes include user tips and useful information.

The notes should be read in the interests of proper use as well as with regard to proper operation and maintenance of the WTGS.

All notices and symbols directly attached to the WTGS, such as safety signs, operating notices, rotation arrows, component identification markings, etc., must be observed without fail. They may not be removed and must be maintained in a fully legible condition.

3.2 Marks and Signs attached by GE Renewable Energy

The personnel in the WTGS must be able to check certain data at all times, in order to ensure safe operation of the WTGS. The following information must therefore be clearly visible and permanently attached:

1. Marks for identification of the device
2. Characteristic values by means of which the permissible limits for safe use are specified, e.g. permissible load, rotational speed, pressure

In addition, information about the prescribed use and possible dangers, which could arise when handling a device, must be provided.

Safety marks could be texts, signs, signals, pictographs and colors. All texts are to be in two languages, i.e. English and the respective national language. Pictographs must be easy to understand and self-explanatory.

The signs are made of durable materials with stable colors.

The instructions on the safety signs and marks must be followed.

3.3 Signs to be attached by the Operator/Owner

The operator/owner of the WTGS is obliged to attach additional warning signs to the WTGS. These are intended to cover safety aspects which are not related to the scope of supply of the manufacturer of the WTGS.

The warning signs must state that:

- It is dangerous and prohibited for unauthorized persons to enter or climb the WTGS
- It is prohibited to remain in the vicinity of the WTGS while work is being carried out outside the nacelle
- Deposits of ice which have formed on the rotor blades (depending on the location of the WTGS) could drop off (cf. Chapter 7.4.1 on page 42)

The operator/owner is responsible for seeing that any components or plant components, which he has supplied, are properly equipped with signs.

PUBLIC – May be distributed external to GE for permitting purposes only.
UNCONTROLLED when printed or transmitted electronically.
© 2020 General Electric Company and/or its affiliates. All rights reserved.

4 Information for the Operator/Owner of the Wind Turbine Generator System

The operator of the WTGS is responsible for ensuring that unauthorized persons remain outside of the WTGS. The WTGS must be kept locked to prevent this.

The wind turbine generator system may only be started up if it has been completely assembled and is in working order.

The wind turbine generator system may only be operated if all safety equipment and safety-relevant devices, e.g. detachable protective equipment, are in place and operational.

If any malfunctions occur, the wind turbine generator system must be shut down immediately and secured. Malfunctions are to be remedied without delay by trained technical personnel.

In the case of malfunctions, which are not automatically reset by the control system of the WTGS, GE Renewable Energy must be contacted before a restart is carried out, in order to confirm that the WTGS may be placed in the automatic operating mode (i.e. whether the WTGS may be restarted).

GE Renewable Energy advises the plant operator/owner to develop specific procedures for the power disconnection and energy isolation for all mechanical, electrical and hydraulic energy sources. Local and national regulations must be taken into account when developing such workplace-specific Lockout/Tagout instructions (also cf. Chapter 12 on page 82).

Follow the switch-on and shutdown procedures and take note of the visual and monitoring displays in accordance with the operating manual!

In addition to this, the operator/owner of the WTGS must comply with the following additional safety instructions (if maintenance is not carried out by GE Renewable Energy employees):

- If the WTGS is not directly connected to the public telephone system, the maintenance personnel must have a cellphone or a radio with them when ascending the tower.
- The personnel must be informed about who to contact in an emergency. (Telephone numbers of a rescue center, police, fire department.)
- The WTGS may only be entered when a second person is available to provide assistance or call for help in the case of an accident.
- Special authorization from GE Renewable Energy is required to carry out inspection and maintenance work inside a WTGS while it is in operation.
- The personnel must be instructed to keep the WTGS escape routes clear at all times when carrying out work as a part of maintenance or operation.
- In the case of work involving a fire hazard, the personnel must have a fire extinguisher (optional feature) ready at hand, in order to be able to immediately extinguish any fire which may start (cf. Chapter 11.1 on page 80).
- Personnel are not permitted to remain at a higher level in the WTGS while work involving a fire hazard is being carried out.

PUBLIC – May be distributed external to GE for permitting purposes only.
UNCONTROLLED when printed or transmitted electronically.
© 2020 General Electric Company and/or its affiliates. All rights reserved.

- Personnel instructed to carry out work in or on the WTGS must be provided with instructions and the appropriate personal protective equipment (PPE).
- If the WTGS is part of a wind farm and connected to a wind power plant, this safety manual must be supplemented in cooperation with the local power supply company, so that it also:
  - describes the safety aspects relevant to the wind farm
  - describes the exchange of information and names the persons who are to be contacted
  - describes access to basic first aid facilities

5 Safety Equipment

The safety equipment serves to reduce risks and dangers. You will find further information on equipment and items, which are subject to inspection in the annex of this safety manual.

5.1 Personal Protective Equipment

Everybody must wear Personal Protective Equipment (PPE) when working on or in the WTGS to protect themselves from injury.

DANGER

Danger of lethal accident!

- ▶ Never enter or climb the WTGS without the personal protective equipment.
- ▶ Otherwise there is danger of falling, resulting in severe injury and death.

The PPE is especially required for climbing the tower. It comprises:

- Safety harness, slider hook/wire grab fall arrestor
- Y-shape double lanyard with fall absorber
- Suspension trauma straps
- Hard hat
- Safety boots
- Gloves
- Safety glasses
- Hearing protection (if required)
- Respirator (if required)
- Fire rated clothing (as required for electrical work)

The PPE must be of an approved type, and for North America must be compliant with applicable CSA, OSHA and ANSI standards, whereas for the European Economic Area it must bear CE marks of conformity stating that it is suitable for the work and protection involved and that it is also suitable for the climatic conditions at the location of the WTGS. The extent and the equipment of the personal protective equipment may vary in some countries.

PUBLIC – May be distributed external to GE for permitting purposes only.
UNCONTROLLED when printed or transmitted electronically.
© 2020 General Electric Company and/or its affiliates. All rights reserved.

The safety harnesses and slider hooks/wire grab fall arrestors must be properly stored and must be accessible.

If several persons ascend the tower simultaneously, personal protective equipment must be available for the respective number of persons.

NOTE

Check the completeness, the condition and the function of your personal protective equipment in good time before entering the WTGS. If a piece of the equipment is missing, it must be replaced before starting work.

The safety harness and the entire safety equipment must be checked before use. Damaged equipment must never be used.

The PPE must be inspected and tested by a technically competent person after any fall, or at the intervals recommended by the manufacturer at least.

NOTE

Follow the manufacturer's directions for use for all component parts of the personal protective equipment!

The ladder, fall arrest system and tie-off must be inspected at the intervals recommended by the manufacturer. After a fall, the affected ladder, fall arrest system, or tie off must be inspected for damage by a technically competent person.

1. **Inspect the ladders, brackets, and clamp brackets for any bending, slipping, or twisting.**
2. **In particular, inspect the ladder rungs for rubbing marks from the fall arrest cable.**

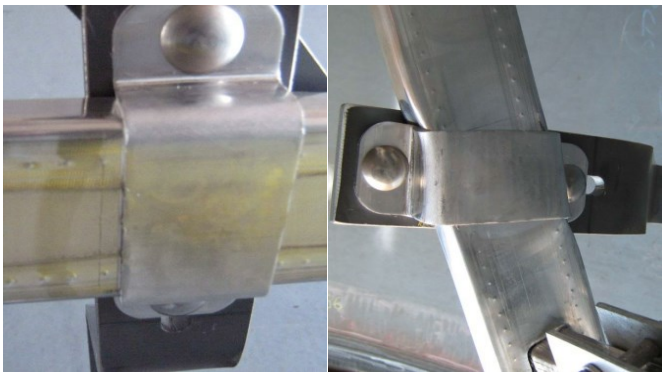

Fig. 1: Ladder champs

PUBLIC – May be distributed external to GE for permitting purposes only.
UNCONTROLLED when printed or transmitted electronically.
© 2020 General Electric Company and/or its affiliates. All rights reserved.

3. Replace any damaged ladder sections, brackets, or hardware.

A – Ladder bracket

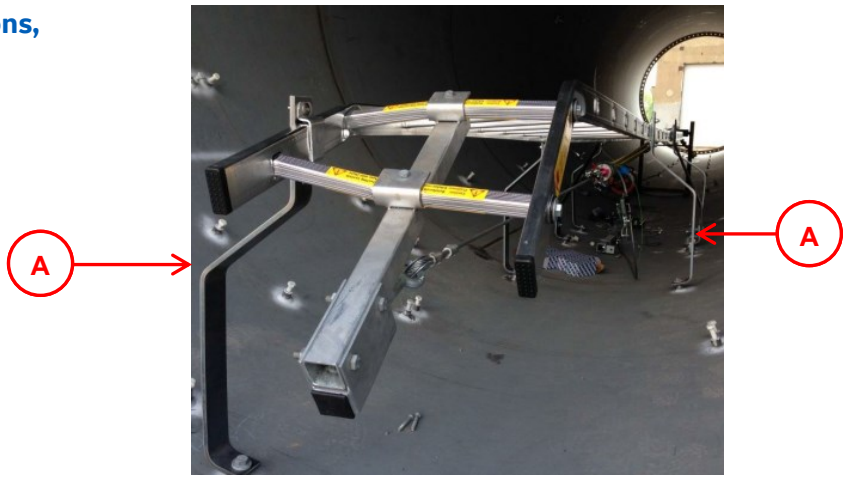

Fig. 2: Ladder brackets

4. **Inspect the entire fall arrest system. Any bent part, frayed cable, or spacers need to be replaced.**

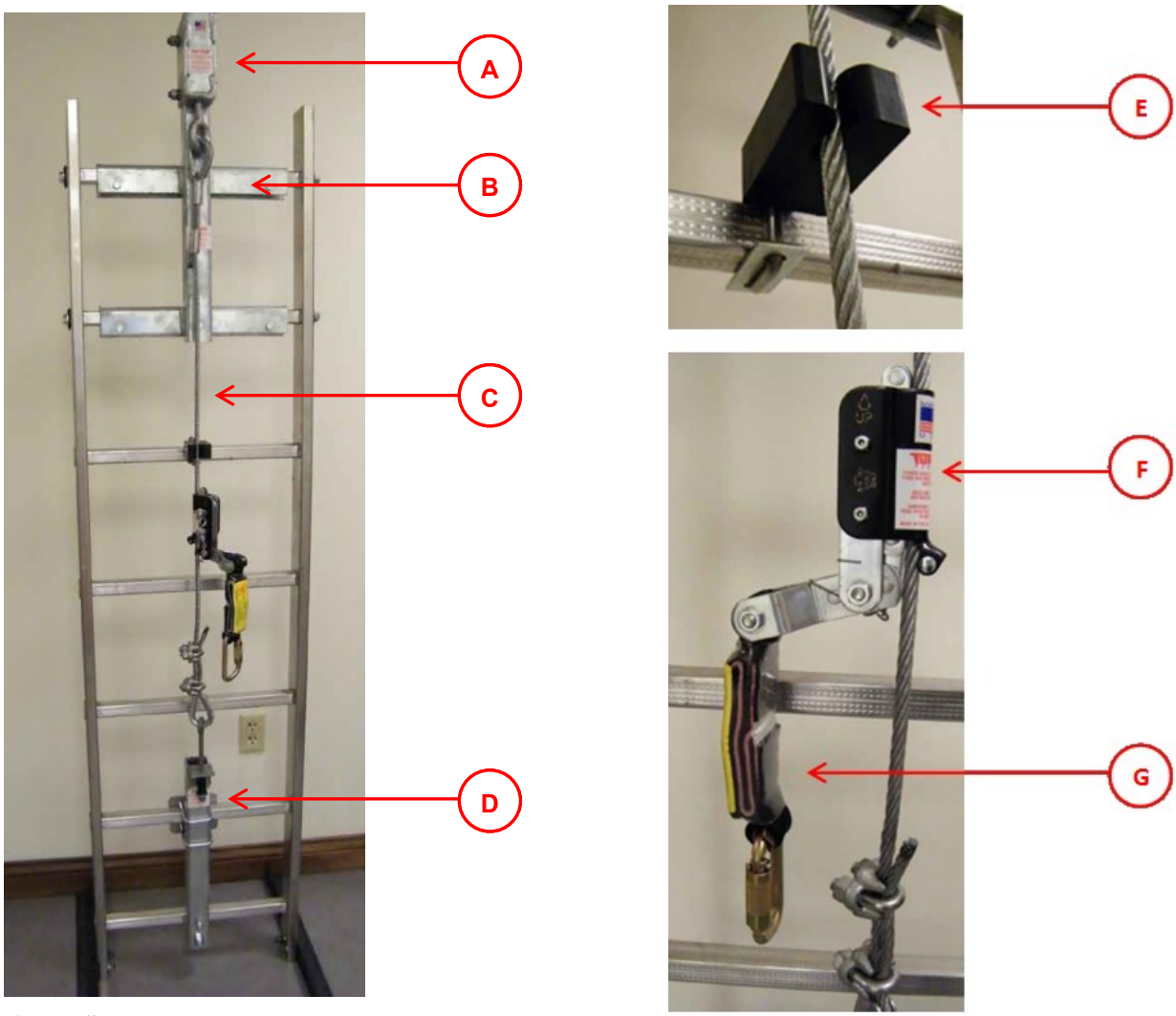

Fig. 3: Fall arrest components

PUBLIC – May be distributed external to GE for permitting purposes only.
UNCONTROLLED when printed or transmitted electronically.
© 2020 General Electric Company and/or its affiliates. All rights reserved.

A – Head end of fall arrest system
B – Ladder rung cover connections
C - Cable
D – Base of fall arrest system
E – Cable Spacer
F – Slider
G - Lanyard

5. Replace all tie off rings that have experienced a load during the fall along with attaching.

A – Bushing
B – Tie off ring

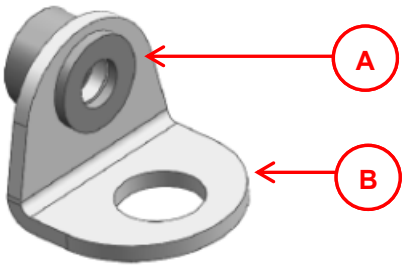

Fig. 4: Tie off

6. Inspect and check all tie off bosses for possible weld cracking. Further, inspect the internal threads to assure that they have not been compromised and that new hardware can be threaded back in easily.

C – Welded boss

Fig. 5: Welded boss

PUBLIC – May be distributed external to GE for permitting purposes only.
UNCONTROLLED when printed or transmitted electronically.
© 2020 General Electric Company and/or its affiliates. All rights reserved.

5.1.1 Safety Harness

NOTICE

Safety harness and the complete safety equipment

- Needs to be approved by EHS.
- Never expose to acids/caustic chemicals. If this is unavoidable, rinse with water immediately afterwards.
- Protect from sharp edges and sharp-edged objects.

The safety harness is used to protect personnel during the ascent to the nacelle of the WTGS, during the descent from the nacelle of the WTGS and, in combination with a lanyard (safety rope) and a fall arrest block, when carrying out work in areas where is a danger of falling.

The safety harnesses and the entire safety system must be cleaned, cared for, maintained and stored in accordance with the manufacturer's instructions.

Follow the manufacturer's instructions when putting on the safety harnesses.

PUBLIC – May be distributed external to GE for permitting purposes only.
UNCONTROLLED when printed or transmitted electronically.
© 2020 General Electric Company and/or its affiliates. All rights reserved.

5.1.2 Wire Grab Fall Arrestor

When the WTGS is provided with a wire rope fall arrest system, two wire grab fall arrestors (optional feature) should be stored together with the safety harness (optional feature).

The manufacturer's instructions for use of the wire grab fall arrestor are to be followed.

In combination with the safety harness, the wire grab fall arrestor is a safety device for ascending/descending the tower via the ladder. Should somebody slip off the ladder, the wire grab fall arrester clamps on tightly on the safety wire rope and prevents a fall. The system consists of a wire rope, fastening elements and a travelling arrestor device. A steady straight-line ascent and descent of the ladder without the user leaning back in the harness is the best way to ensure that the wire grab fall arrestor runs freely.

WARNING

Danger of hand injuries!

- Keep your hands on the sides of the ladder during the ascent/descent
- A free running wire grab fall arrestor can crush your hands if you grasp the device or the safety rail and lead to serious injuries.

Using the Wire Grab Fall Arrestor

1. **Insert the wire grab fall arrestor and the shock pack assembly into the D-ring (or retaining eyes) of the safety harness. Only the retaining eye at chest level is allowed to be used.**
2. **Push the wire grab fall arrestor into the wire rope attached to the ladder. The "up" marking intends the installation direction and NOT the travel direction.**
3. **Ascend and descend the ladder slowly and carefully.**
4. **Ensure to be in contact with the ladder on at least 3 points at all times.**

Fig. 6: Usage of the wire grab fall arrestor (example)

PUBLIC – May be distributed external to GE for permitting purposes only.
UNCONTROLLED when printed or transmitted electronically.
© 2020 General Electric Company and/or its affiliates. All rights reserved.

5.1.3 Slider Hook

When the WTGS is provided with a safety rail fall arrest system, two slider hooks are stored together with the safety harness.

The manufacturer's instructions for use of the slider hook are to be followed.

In combination with the safety harness, the slider hook is a safety device for ascending/descending the tower via the ladder. Should somebody slip off the ladder, the slider hook clamps on tightly to the safety rail and prevents a fall. The system consists of a fixed guide, fastening elements, and a travelling arrestor device. A steady straight-line ascent and descent of the ladder without the user leaning back in the harness is the best way to ensure that the slider hook runs freely.

WARNING

Danger of hand injuries!

- Keep your hands on the sides of the ladder during the ascent/descent
- A free running slider hook can crush your hands if you grasp the device or the safety rail and lead to serious injuries.

Using the Slider Hook

5. **Insert the slider hook into the retaining eyes of the safety harness. Only the retaining eye at chest level is allowed to be used.**
6. **Push the slider hook into the guide rail mounted on the ladder.**
   The “up” marking intends the installation direction and NOT the travel direction.
7. **Ascend and descend the ladder slowly and carefully.**
8. **Ensure to be in contact with the ladder on at least 3 points at all times.**

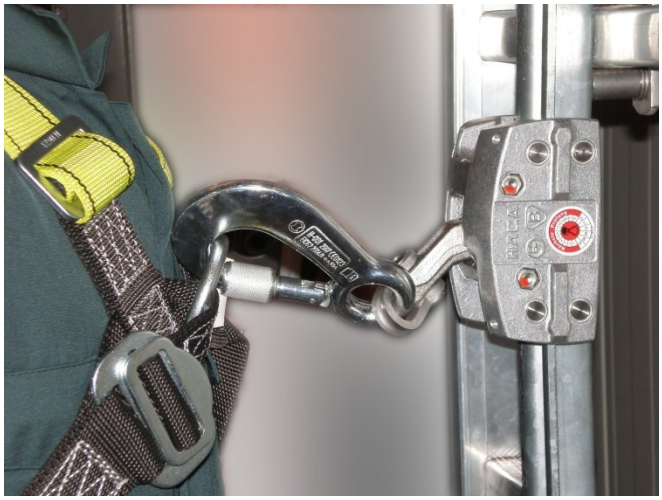

Fig. 7: Usage of the slider hook (example)

PUBLIC – May be distributed external to GE for permitting purposes only.
UNCONTROLLED when printed or transmitted electronically.
© 2020 General Electric Company and/or its affiliates. All rights reserved.

5.2 Protective Equipment for Measurements on Live Components

DANGER

Life-threatening hazard! Danger of Electricity!

- Do not touch live components in operation.
- Wear your PPE while working at the cabinet.
- Contact will cause extremely serious injuries and even death.

Access to an energized cabinet is only allowed in the following cases:

1. Visual inspection
2. Circuit breaker switching
3. Circuit metering with a Cat III 1,000 V rated meter

Special PPE is required for measurements on live components. This provides protection against electricity flowing through the body, e.g. as a result of touching live components in operation. Furthermore, it provides protection against accidental arcs caused by insulation breakdowns e.g. as a result of switching operations under load.

Refer to the National Fire Protection Association (NFPA) 70E document (GE standard) for further guidance.

5.2.1 PDP – Power Distribution Panel

Special protective equipment is mandatory for PDP.

5.2.2 Converter and TPIC

As a general principle, the converter and TPIC must be completely de-energized before commencing work. The access doors to the protective motor switches are an exception to this.

PUBLIC – May be distributed external to GE for permitting purposes only.
UNCONTROLLED when printed or transmitted electronically.
© 2020 General Electric Company and/or its affiliates. All rights reserved.

5.3 Hooking Points

All hooking points must be tested, certified and marked in yellow. In addition to that, they are labeled with a statement of the permissible safe working load, if they can be used for lifting purposes as well, like for example the swinging gallow in the nacelle.

These hooking points must be used in conjunction with a safety harness and a lanyard with a fall absorber for protection in areas where there is a danger of falling.

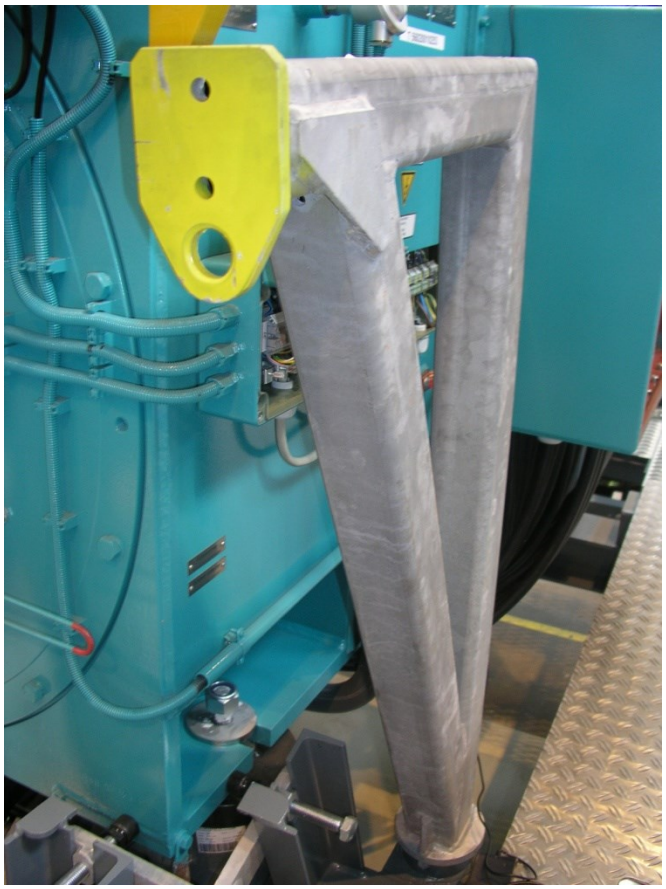

Fig. 8: Hooking point on the swinging gallows

PUBLIC – May be distributed external to GE for permitting purposes only.
UNCONTROLLED when printed or transmitted electronically.
© 2020 General Electric Company and/or its affiliates. All rights reserved.

5.4 Abseiling Device[1]

As a rule, the WTGS is provided with an abseiling device (e.g. abseiling device AG 10 K – RK Sicherheitstechnik). The abseiling device has a rope that is long enough for the respective height of the tower of the WTGS.

The fixture for the abseiling device needs to be placed in the front of the nacelle close to the hatch.

As a result a person standing on the nacelle roof can easily reach for the equipment bag containing the abseiling device.

Fig. 9: Equipment bag

The abseiling device is used by the personnel to abseil from high workplaces. It is not a fall arresting device, instead it is used primarily for the self-evacuation of personnel in the event of an accident or fire. In case of fire, it can be used to abseil from the roof of the nacelle of the WTGS as a 2nd escape route.

As a rule, the hooking points for the abseiling device are marked in yellow and are designated with a statement of the permissible safe workload. The abseiling device is attached to the hooking point by means of a snap hook or to the roof rail by means of a sling rope and a snap hook.

WARNING

- **Danger of accident with a defective abseiling device!**
- **In an emergency, your life could depend on the abseiling device working properly!**
- Therefore, check the integrity of the seal of the equipment bag on each visit to the nacelle.
- The abseiling device is pre-assembled and is ready for use immediately after it has been removed from the equipment bag.
- Carry out an additional visual inspection of the abseiling device immediately before use.

[1] This device is not supplied in North America

PUBLIC – May be distributed external to GE for permitting purposes only.
UNCONTROLLED when printed or transmitted electronically.
© 2020 General Electric Company and/or its affiliates. All rights reserved.

NOTE

It is easy to operate the abseiling device incorrectly in emergency situations. Therefore, ensure that you know how to operate the device and are familiar with the abseiling operation. Please also read the operating manual.

This is the only way to ensure that the correct maneuvers are carried out in an emergency.

5.4.1 Abseiling from the Roof of the Nacelle

Abseiling can take place singly (shuttle system) or in pairs. The abseiling device may be loaded with a maximum of 225 kg up to a rope pitch with a length which is adequate to the relevant tower height. Abseiling takes place at a speed of 0.7 m/s. The abseiling speed is regulated by means of a centrifugal brake.

A typical abseiling operation is described in the following. The procedure described may vary depending on the abseiling device. As a general principle, always follow the instructions of the manufacturer of the respective abseiling device!

1. **Make sure your safety harness is on correctly.**
2. **Secure yourself against falling by means of the lanyard. Attach the lanyard on the nacelle rail/ nacelle tie off points.**
3. **Close the roof hatch.**
4. **Break the lead seal on the equipment bag.**
5. **Remove the abseiling device from the equipment bag.**

Leave the rope in the equipment bag.

Fig. 10: Abseiling device in the equipment bag

6. **Attach the abseiling device to the roof rail of the nacelle by means of the sling rope and the snap hook.**
7. **Secure the snap hook with the clamping nut.**
8. **Throw down the equipment bag with the rope.**
9. **Check the condition and the correct functioning of the device.**
10. **Check the rope for loops and knots.**

Fig. 11: Abseiling device

PUBLIC – May be distributed external to GE for permitting purposes only.
UNCONTROLLED when printed or transmitted electronically.
© 2020 General Electric Company and/or its affiliates. All rights reserved.

WARNING

- **Interruption of abseiling through loops or knots!**
- **REMOVE ALL LOOPS AND KNOTS FROM THE ROPE BEFORE YOU START ABSEILING!**
- Loops or knots in the rope prevent abseiling, since the rope cannot run through the abseiling device if it has a knot. As a result, always check the rope carefully!

1. **Hook the snap hook on the short end of the rope into the two textile chest rings of your safety harness.**
2. **Sit in front of the roof rail on the edge of the nacelle.**
3. **Ensure that the length of rope between the chest rings of your safety harness and the abseiling device is pulled taut.**
4. **Release the lanyard attached for your safety.**
5. **Slowly put your weight on the rope of the abseiling equipment.**

   After you have let go of the nacelle and the roof rail, you will abseil at a speed of 0.7 m/s.
6. **After you have reached the ground, immediately release the snap hook from the chest rings of your safety harness.**
7. **A second person waiting on the roof can then hook in the snap hook of the end of the rope which is now at the top and abseil as described.**

   The rope may have to be pulled through until the snap hook arrives at the top.
8. **The device must be inspected by a technically competent person after a rescue or an abseiling exercise.**

5.4.2 Care and Maintenance of the Abseiling Device

The textile components of the abseiling equipment may only be cleaned by the manufacturer.

If damage to the rope, snap hook or abseiling device is discovered, the escape equipment must be withdrawn from use and inspected by the manufacturer.

Under normal service conditions, a service period of 4-6 years can be assumed for the textile ropes.

The abseiling device must be inspected by a technically competent person or by the manufacturer after a rescue or an abseiling exercise or at the intervals recommended by the manufacturer at the latest.

PUBLIC – May be distributed external to GE for permitting purposes only.
UNCONTROLLED when printed or transmitted electronically.
© 2020 General Electric Company and/or its affiliates. All rights reserved.

5.5 Fire Extinguishers (optional feature)

The WTGS can be provided with a fire extinguisher in the tower and in the nacelle.

This sign identifies the locations of the fire extinguishers.

DANGER

Danger of Electricity!

- De-energize the installation before using the fire extinguisher.
- After actuation of the medium-voltage circuit-breaker, keep a safe distance of at least one meter from the fire when extinguishing!
- **The fire extinguisher may only be used on electrical installations up to 1000 V!**
- Failure to follow this warning, will result in death or serious injury.

NOTE

Ensure that you are familiar with the function and the operation of the fire extinguisher. Only thus can you act quickly and purposefully in emergency situations.

The use of fire extinguishers must be practiced. The personnel deployed in the WTGS must therefore be trained in fire fighting at regular intervals.

A technically competent person in accordance with the national regulations must regularly inspect the fire extinguishers. A record of the check with the date must be permanently affixed to the appliance in an easily visible location. The directions for use (on the fire extinguisher) must be followed before fire-fighting.

PUBLIC – May be distributed external to GE for permitting purposes only.
UNCONTROLLED when printed or transmitted electronically.
© 2020 General Electric Company and/or its affiliates. All rights reserved.

Operating principle of the optional fire extinguisher – An example

As a general principle, always follow the instructions of the manufacturer of the respective fire extinguisher.

1. **Remove the safety tab (1).**
2. **Press down the fire-extinguishing button (2).**
3. **The perforating disk of the CO2 cylinder (3) is opened and the CO2 released for charging the tank. The appliance is ready for use.**
4. **The extinguishing agent, which is under pressure, flows through the riser pipe (4) to the valve armature.**
5. **After the fire-extinguishing button has been pressed, the extinguishing agent flows through the hose line to the spray fog nozzle (5).**
6. **The jet of extinguishing agent can be interrupted at any time by releasing the fire-extinguishing button.**

   (Contents of the fire extinguisher: 5 kg)

Fig. 12: Fire extinguisher – An example

PUBLIC – May be distributed external to GE for permitting purposes only.
UNCONTROLLED when printed or transmitted electronically.
© 2020 General Electric Company and/or its affiliates. All rights reserved.

5.6 First Aid

First aid is used for the initial treatment of an accident victim until the arrival of a doctor or until transport to a hospital, in order to avert a life-threatening situation or to prevent secondary injury.

NOTE

There is a legal obligation to carry out rescue measures provided that this is possible without considerable self-endangerment.

The plant may never be entered alone, so that a second person can send an emergency call. If the interphone has a landline connection, the emergency call can be made via the interphone. An operational cellphone or radio is to be carried at all times, in order to be able to ensure rapid assistance in an emergency.

Proceed as follows in the case of an accident:

1. **Keep CALM!**
2. **In the case of serious accidents and injuries, notify a rescue center by interphone or cellphone.**
3. **Render first aid immediately.**
4. **Secure the scene of the accident.**
5. **Report all accidents (near-accidents, minor accidents, serious accidents) to your immediate supervisor. Also notify the EHS department of GE Renewable Energy.**

NOTICE

Keep access to the WTGS clear!

- The access roads to the plant must be kept clear at all times and be negotiable by car, in order to guarantee rapid and problem-free first aid in an emergency.

An (optional) first aid box can be located in the nacelle of the wind turbine generator system for the treatment of minor injuries. Any material removed is to be replaced immediately after use.

This sign identifies the location of the first aid box in the nacelle.

PUBLIC – May be distributed external to GE for permitting purposes only.
UNCONTROLLED when printed or transmitted electronically.
© 2020 General Electric Company and/or its affiliates. All rights reserved.

6 Safety Devices

The safety devices of the WTGS comply with the requirements of the standard DIN EN ISO 13857 'Safety of machinery - Safety distances to prevent hazard zones being reached by upper and lower limbs'.

The unauthorized removal or the overriding (by-passing) of safety devices is a punishable offence. Any liability claim is invalid in the case of damage.

Any point, at which danger can arise, and all drive units are provided with protective covers, which can only be undone and removed by means of tools. These protective covers may only be removed by qualified staff and only for the performance of service and maintenance or repair work. The protective covers are to be refitted immediately after completion of the work.

The owner / user of the WTGS and the personnel deployed by him for operation, maintenance and repairs bear the responsibility for an accident-free work process.

6.1 Emergency Stop Pushbuttons

Any power-operated work equipment with dangerous movements must have one or - if necessary - several emergency control units for the prevention or reduction of an imminent or arisen danger, by means of which the dangerous movements can be stopped or rendered ineffective in another manner.

The emergency stop pushbuttons are not dependent on electronic logic.

Emergency stop pushbuttons (red mushroom pushbutton on a yellow base) are located on the control cabinet and, if required, on the frequency converter cabinet, the top box in the nacelle and the control cabinet(s) in the hub.

Fig. 13: Emergency stop pushbutton

NOTE

The **EMERGENCY STOP** pushbutton may only be pressed in situations, in which the safety of personnel or the WTGS and its components is threatened.

Pressing the emergency stop pushbutton causes the safety chain to open, and the rotor of the WTGS is brought to a standstill via emergency braking. Initiation of the safety chain causes the rotor blades to travel to the feathering position in the [emergency] battery mode! In addition to this, the WTGS is de-energized except for the control and axis battery voltage.

PUBLIC – May be distributed external to GE for permitting purposes only.
UNCONTROLLED when printed or transmitted electronically.
© 2020 General Electric Company and/or its affiliates. All rights reserved.

6.2 Rotor Locks

Turbines with a rotor diameter of 120 m and above are equipped with a low speed shaft (LSS) and a high speed shaft (HSS) rotor lock.

The LSS rotor lock is designed to support all installation activities including single blade installation. It can also be used to lock the drivetrain during external or internal maintenance work for example on the blades, the gearbox, the HSS brake and the HSS coupling.

All other maintenance activities that require a locked rotor, for example maintenance work in the hub, should be carried out using the HSS lock only. The HSS lock is easier to engage and was designed for the same or higher maintenance windspeeds compared to the LSS lock.

Depending on the model of turbine being serviced and weather conditions, the permissible wind speed to engage each lock will vary. For additional details reference to the technical documentation addressed to the operating and maintenance personnel.

In case the rotor needs to be locked for maintenance activities on the LSS side, for example for internal or external blade works, the allowable maximum 10 min. average windspeed can be increased to 12m/s by additionally applying the HSS lock at the same time (130/137 m rotors only).

The wind speed can be read on the display of the top box or in the controller's web HMI.

The following chapters describe the application of the LSS and the HSS rotor locks.

PUBLIC – May be distributed external to GE for permitting purposes only.
UNCONTROLLED when printed or transmitted electronically.
© 2020 General Electric Company and/or its affiliates. All rights reserved.

Engaging the Rotor Lock

DANGER

Danger of Electricity!

- **FOLLOW YOUR RESPECTIVE LOCKOUT/TAGOUT INSTRUCTIONS! (also cf. Chapter 4)**
- Failure to follow this warning, will result in death or serious injury.

Caution!

As a general principle, all personnel who may be affected must be notified before Lockout/Tagout devices are installed and after they have been removed.

Any employees who use the equipment or work in its vicinity must be informed without fail that the plant has been shut down and that the system-specific LOTO procedure has been applied.

Caution!

The wind turbine generator system must be in the "Manual Stop" mode!

NOTICE

The WTGS must not get into oscillation!

- Take adequate measures to avoid oscillations by yawing the WTGS into the wind. In the event of changing wind conditions leading to oscillations of the WTGS, yaw the machine head until the oscillations stop. If this doesn´t stop the oscillations, stop all activities and release the rotor lock **and** the high-speed shaft brake.

If the wind speed unexpectedly increases, or the ambient temperature falls below −30 °C, any work must stop immediately, and the rotor lock must be disengaged in the reverse sequence. For detailed requirements refer to your company-specific Cold Weather Guidelines.

PUBLIC – May be distributed external to GE for permitting purposes only.
UNCONTROLLED when printed or transmitted electronically.
© 2020 General Electric Company and/or its affiliates. All rights reserved.

6.2.1 Rotor Lock on the High-speed Shaft

The rotor lock on the high-speed shaft is located on the brake disk of the outgoing shaft of the gearbox.

Engaging the Rotor Lock on the High-Speed Shaft

1. Manual stop and pitch blades to feathered position
2. Pull out the spring-loaded locking pin of the rotor lock to enable the crank mechanism and advance the rotor lock as far as possible
3. If necessary, briefly actuate/release the "rotor brake" by the switch on the gear box, in order to disengage the brake for a short time, thereby placing the brake disk in a better position.
4. Fully engage the rotor lock until the locking pin locks home again at the lower position.

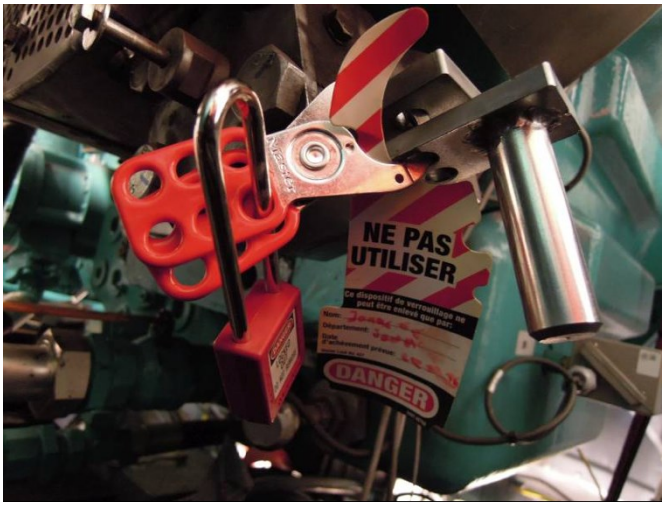

Fig. 14: Securing the HSS rotor lock with LOTO

6.2.2 Rotor Lock on the Low-Speed Shaft (LSS)

The LSS rotor lock mechanism consists of a rotor lock disk with holes attached to the main shaft flange and a lock pin attached to the bedplate. Rotor and drive train motion is blocked by manually or hydraulically (depending on the turbine model) inserting the lock pin into one of the rotor lock disk holes. The limit switches monitoring the position of the pin will open the safety chain as a result.

Engaging the rotor lock on the Low-speed Shaft

PUBLIC – May be distributed external to GE for permitting purposes only.
UNCONTROLLED when printed or transmitted electronically.
© 2020 General Electric Company and/or its affiliates. All rights reserved.

1. **Manual stop and pitch blades to the feathered position**
2. **After the rotor has been braked, check that the mark on the rotor lock disk can be seen at the indicator point in the flag window. Then the rotor lock cylinder is aligned with a bore hole in the rotor lock disk.**

   It is highly recommended that for the rotor lock alignment one person is located next to the flag window checking the position of the mark on the rotor lock disk while a second person is operating the secondary brake from the topbox or manually on the secondary brake hydraulic.
3. **Move the rotor lock pin towards the rotor lock disk until the pin is half way in access to the disc. On mechanical rotor locks, the screw in the center of the rotor lock needs to be turned with a wrench. On hydraulically actuated rotor locks, the pin can be inserted by pushbuttons on the topbox.**

   The safety chain is thereby interrupted at the limit switch in the rotor lock.
4. **Operate the secondary brake. Place the switch "rotor brake pump" on the top box in the "off" position or open the responsible valve on the high speed brake hydraulic. Make sure the HSS brake is released.**
5. **Insert the rotor lock all the way into the rotor lock disk by continuing turning the screw or actuating the hydraulics.**

   If necessary, the conical lock pin will adjust the hole and the pin.
6. **Operate the secondary brake. Place the switch "rotor brake pump" on the top box in the "on" position or close the responsible valve on the high-speed brake hydraulic and raise brake hydraulic pressure manually.**

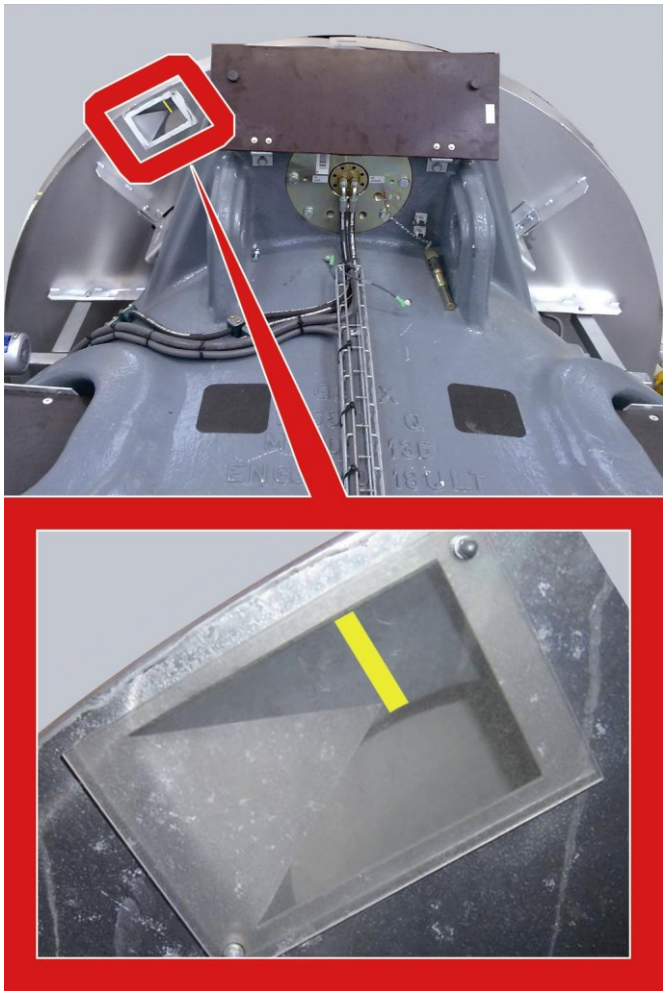

Fig. 15: Checking the alignment

Fig. 16: Mechanical rotor lock actuation

PUBLIC – May be distributed external to GE for permitting purposes only.
UNCONTROLLED when printed or transmitted electronically.
© 2020 General Electric Company and/or its affiliates. All rights reserved.

7. **For 3MW platform, screw the M24 lock screw all the way into the cover of the lock to prevent the pin from working itself out.**

   The screw is flush-mounted in the catwalk board on the rotor lock**.**

Fig. 17: Securing the LSS rotor lock - 3 MW

8. **For Cypress turbines, insert the lock plate and related small lock pin**

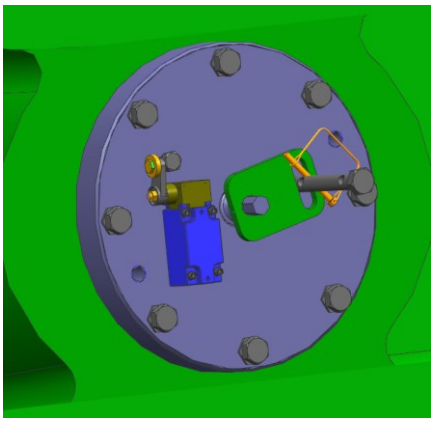

Fig. 18:: Securing the rotor lock – Cypress turbines

9. **For 3MW turbines equipped with a hydraulically actuated rotor lock, secure the top box and the hydraulic power unit with warning tags and an individual lock.**
   For all mechanically actuated system, apply LOTO to the lock screw.

PUBLIC – May be distributed external to GE for permitting purposes only.
UNCONTROLLED when printed or transmitted electronically.
© 2020 General Electric Company and/or its affiliates. All rights reserved.

NOTICE

Visual check necessary!

- The piston must be inserted all the way into the rotor lock disk, the end face of the piston must be flush with the surface on the rotor side of the rotor lock disk. The M24 rotor lock screw must be completely screwed in, all three LOTO holes must be visible in the slot of the bracket next to the pin.

- If this is not the case, the hub must not be entered.

NOTICE

Risk of Damage to the Wind Turbine Generator System!

- The rotor lock and the high-speed shaft brake must always be released before leaving the turbine. Make sure that the machine is idling.

PUBLIC – May be distributed external to GE for permitting purposes only.
UNCONTROLLED when printed or transmitted electronically.
© 2020 General Electric Company and/or its affiliates. All rights reserved.

Removing the Rotor Lock on the Low-Speed Shaft:

NOTICE

- Risk of Damage to the Wind Turbine Generator System!
- The blades must be pitched back into the feathered position before removing the rotor lock. Otherwise high torque on the rotor shaft can damage the locking pin and the lock disc.

1. **Make sure the blades are pitched back to feathered position**
2. **Make sure the HSS brake is applied**
3. **Remove the LOTO locks on the lock screw**
4. **Unscrew the lock screw and remove it completely**
5. **Pull out the rotor lock pin either mechanically with a wrench or using the hydraulic system**

6.3 Emergency Lighting

In the case of a power failure, emergency lighting provides light in the tower and the nacelle. The emergency lighting is equipped with an independent power supply (battery), which provides voltage for the lamps for approx. 1.5 hours/90 minutes (North America) or 1 hour/60 minutes (Europe) after a power failure. The WTGS must be left immediately if the emergency lighting is activated as the result of a power failure.

PUBLIC – May be distributed external to GE for permitting purposes only.
UNCONTROLLED when printed or transmitted electronically.
© 2020 General Electric Company and/or its affiliates. All rights reserved.

7 Residual Risks

Even if all the safety requirements are complied with, a residual risk remains during operation of the wind turbine generator systems.

Anyone who works on and with the WTGS must be aware of these residual risks and follow the instructions which prevent these residual risks from resulting in accidents or damage.

Danger!

Danger of injury during ascent!

The full-body safety harness must be put on and attached to the safety rail by means of the slider hook during the ascent to the nacelle, in order to prevent the person ascending from falling. Any oil or grease deposits on the ladder must be removed immediately to prevent anyone from slipping while using the ladder.

Ensure that your footwear is clean!

Warning!

Falling objects hazard warning!

An object may be unknowingly and unintentionally be dropped and cause injury to somebody if they are hit by the object.

For this reason, only one person at a time may climb a section of the ladder between two platforms. The hatch covers must be closed again immediately after they have been passed through. Tools and equipment must be secured while climbing.

Danger!

Life-threatening hazard - working under suspended loads!

Never stay under suspended loads.

Danger!

Danger of falling from the nacelle!

You are exposed to strong winds when climbing out through the hatch. Attach your lanyard to the nearest hooking point from inside the nacelle. Climbing out is only allowed at wind speeds up to 15 m/s.

As a general principle, there is a falling hazard at all higher locations/workplaces.

PUBLIC – May be distributed external to GE for permitting purposes only.
UNCONTROLLED when printed or transmitted electronically.
© 2020 General Electric Company and/or its affiliates. All rights reserved.

7.1 Special Dangers – Electric Power

Note the following rules when carrying out any work on the electrical components of the plant, e.g. assembly, connection, opening of a device, maintenance:

1. DISCONNECTION
2. SECURE against re-connection
3. Ascertain safe isolation from supply
4. Ground and short-circuit
5. Cover up adjacent live components or provide them with barriers

In addition, ensure that all drives are at standstill.

Danger!

Caution! Danger from electrical voltage!

When switched on, electrical installations and machinery have live exposed conductors or rotating parts. They could therefore cause personal injury or death and material damage if the cover and the prescribed safety devices are removed, or in the event of incorrect handling and maintenance and in the case of improper use. The above stated safety regulations must therefore be complied with, particularly when removing a cover.

In addition to this, electrical energy is still present in devices with power electronics even after the supply voltage to the device has been switched off. These devices are secured against unauthorized access. After waiting an appropriate time for the device to discharge (e.g. capacitors), always check for residual voltage before starting work.

FOLLOW THE RESPECTIVE LOCKOUT/TAGOUT INSTRUCTIONS! (cf. Chapter 12)

In the case of malfunctions of the energy supply of the wind turbine generator system, actuate the EMERGENCY STOP button immediately if the plant has not already been switched off by the automatic control system.

In the case of repairs, care should be taken that design features are not modified so that safety is compromised (e.g. leakage distances and sparking distances in air) and that distances are not reduced by insulation materials. The control system and interlocking as well as the monitoring and protective functions (thermal motor protection, speed monitoring, over current, fault to ground, etc.) may not be set out of function, even during a test run.

During prolonged cold soak events where the grid remains de-energized and external ambient temperature is below −30 °C, the medium voltage switchgear will be disconnected from the grid automatically. Upon re-energization of the grid, the internal turbine air surrounding the MVSG must warm up above −25 °C prior to entering the turbine to reclose the MVSG. Additionally, use of the load disconnect switch panel of the switchgear must not be attempted until ambient air surrounding MVSG temperature is above −25 °C.

PUBLIC – May be distributed external to GE for permitting purposes only.
UNCONTROLLED when printed or transmitted electronically.
© 2020 General Electric Company and/or its affiliates. All rights reserved.

As a general principle, maintenance work may only be carried out by two persons, so that the second person can actuate the EMERGENCY STOP button in an emergency.

Only use insulated and approved tools.
Only use original fuses with the prescribed amperage!

7.2 Special Dangers – Hydraulic System

For maintenance work on the hydraulic system, maintenance staff must be completely acquainted with the hydraulic circuit diagram and must have been instructed about its function and the possible consequences of an operating error.

Prior to any work on the hydraulic accumulators, it must be ensured that the accumulator circuits have been depressurized. The shutdown device is clearly marked and independent of the system management.

Danger!

Danger from stored residual hydraulic energy!

FOLLOW THE RESPECTIVE LOCKOUT/TAGOUT INSTRUCTIONS! (cf. Chapter 12)

7.3 Special Dangers - Noise

The A-weighted equivalent continuous sound pressure level inside the tower and the nacelle exceeds the permissible 70 dBA limit during normal operation as per European Standard EN 50308, and the permissible 85 dBA TWA per OSHA 29 CFR 1910.95. The highest sound pressure level was measured inside the nacelle.

Certain tools are prone to generate high sound pressure levels in excess of 70 dBA, such as:

- angle grinder
- pneumatic torque wrench
- air blasting pistol etc.

Any conditions requiring to raise the voice dramatically for speech, requires to wear ear protection with SNR > 25 dB (noise reduction index).

Staying in the WTGS while it is in operation is unavoidable in the case of certain maintenance and repair work. In such cases it is mandatory for personnel to wear ear protection with SNR > 25 dB to avoid accumulated permanent ear damages.

PUBLIC – May be distributed external to GE for permitting purposes only.
UNCONTROLLED when printed or transmitted electronically.
© 2020 General Electric Company and/or its affiliates. All rights reserved.

Note!

Anybody carrying out work in the tower or the nacelle when the WTGS is in operation must wear hearing protection as part of their personal protective equipment.

NOTE

When obtaining ear protection make sure the packaging identifies noise reduction with a SNR value. Only certain models of foam ear protection products (to be inserted in the auditory canal) or – even better – ear muffs (covering both ears; possibly integrated in hard hat) are capable of achieving SNR > 25 dB.

Fig. 19: Foam ear protection

Fig. 20: Ear muffs (ear cups)

Fig. 21: Ear muffs integrated in hard hat

For the purpose of EN 50308 standard compliance a noise exposure assessment has been conducted on 2.5MW prototype machine at accessible working locations (Report No. 208125-01.01, performed by Koetter Consulting on April 25, 2008.

In summary per 2003/10/EC guidelines:

1. L_{Aeq} (time averaged noise level) in excess of 100 dBA could be reached inside the nacelle in the vicinity of the gearbox brake disk and high speed coupling area.
2. L_{Aeq} (time averaged noise level) in excess of 90 dBA could be reached inside the tower compartment in the vicinity of the power converter area.
3. Work in both nacelle and tower requires ear protection during wind turbine operations.

PUBLIC – May be distributed external to GE for permitting purposes only.
UNCONTROLLED when printed or transmitted electronically.
© 2020 General Electric Company and/or its affiliates. All rights reserved.

7.4 Special Dangers – Icing

7.4.1 Ice Build-up on the Rotor Blades

Ice build-up on wind turbine generator systems (WTGS) and, in particular, the shedding of ice from rotor blades can lead to problems, if wind turbine generator systems are planned in the vicinity of roads, car parks or buildings at locations with an increased risk of freezing conditions, unless suitable safety measures are taken.

If people or objects near the wind turbine generator system (within the distance R2) could be endangered by pieces of ice thrown off during operation, GE Renewable Energy always recommends the use of ice detection.

The WTGS control system is able to detect ice by low aero performance where the actual power output of the turbine is compared to the possible output. In case of ice on the blades the power output would be lower. In icing conditions the controls system will stop the turbine.

If the blades are covered by ice asymmetrically, this can be detected by lateral tower vibration.

In case of ice detection the rotor is brought to a standstill or rotates at a very low speed. Depending on the detection a message about the icy condition is displayed on the monitor in the turbine:

- 373 Ice detected via low power (PMG and DFIG turbines)
- 375 Ice detected via tower vibrations (PMG turbines)
- 600 Ice detected via tower vibrations (DFIG turbines)

In addition, a message is sent to the remote control center/operator. The turbine does not restart until the detector is free of ice or the operator has reassured himself of the ice-free condition of the rotor blades, has acknowledged the ice alarm message and restarts the plant.

However, ice may form on the rotor blades considerably more quickly than the design of the ice detection considers. As a result, there is a residual risk for the reliable detection of ice build-up on the rotor blades.

The ice detection must be set relatively sensitively, in order to ensure that the time from when ice starts to build up on the rotor blades until the detection sends a message about the build-up of ice is as short as possible. As a consequence, a certain number of spurious trippings cannot be excluded. Loss of energy yield may occur as a result of the spurious trippings.

If an ice detector is not used, it is advisable to cordon off an area around the wind turbine generator system with the radius R* during freezing weather conditions, in order to ensure that individuals are not endangered by pieces of ice thrown off during operation (cf. also Section 10.1).

[2] **R** = 1.5 x (hub height [m] + rotor diameter [m])
(Recommendation of the German Wind Energy Institute DEWI 11/1999)

PUBLIC – May be distributed external to GE for permitting purposes only.
UNCONTROLLED when printed or transmitted electronically.
© 2020 General Electric Company and/or its affiliates. All rights reserved.

7.4.2 Icy Condition of the Access Route

During the winter months, access to the plants may be very slippery due to ice or hard-packed snow. There is an increased danger of slipping.

7.4.3 Icy Condition of the Tread of the Steps outside the Nacelle

In the winter months, the tread of the steps outside the nacelle can be icy as a result of ice and hard-packed snow. There is an increased danger of slipping and falling from a height.

7.5 Exceptional Dangers – Earthquakes

In the case of a earthquake, the operator must inspect the WTGS for damage. In particular, the following turbine components must be inspected.

- Determination of the acceleration values in the tower top (PCH BOX) which arose during the earthquake.
- Contact GE Renewable Energy, in order agree on the further procedure and possible inspection schedules.

PUBLIC – May be distributed external to GE for permitting purposes only.
UNCONTROLLED when printed or transmitted electronically.
© 2020 General Electric Company and/or its affiliates. All rights reserved.

8 Safety Information for Individual Plant Components

8.1 Doors and Hatches

As a general principle, there is a falling hazard at open hatches in the WTGS. Therefore keep all hatches in the tower and in the Pre-Assembled Power Module (PPM) closed.

8.2 Pre-Assembled Power Module (PPM) 3 MW platform ONLY

8.2.1 4-Level PPM

When using the cable winch of the WTGS at the crossover level, do not stay in the area underneath the cable winch! Respect the instructions provided in the wind turbine signalization and in the technical documentation addressed to the operating and maintenance personnel.

Danger!

Life-threatening hazard - working under suspended loads!

Never stay under suspended loads.

PUBLIC – May be distributed external to GE for permitting purposes only.
UNCONTROLLED when printed or transmitted electronically.
© 2020 General Electric Company and/or its affiliates. All rights reserved.

Hooking Points on the Pre-Assembled Power Module (PPM) 3 MW platform ONLY

Several hooking points marked in signal yellow are located on each section of the PPM.

The hooking points of the respective section must be used when carrying out work which requires removal of the installed fall protection systems or safety rails.

The respective hooking points of the section must be used when carrying out work on the ventilation ducts behind the converters.

Respect the instructions provided in the wind turbine signalization and in the technical documentation addressed to the operating and maintenance personnel.

PUBLIC – May be distributed external to GE for permitting purposes only.
UNCONTROLLED when printed or transmitted electronically.
© 2020 General Electric Company and/or its affiliates. All rights reserved.

8.2.2 3-Level PPM 3 MW platform ONLY

When using the cable winch of the WTGS at the Controller level or at the Converter level, do not stay in the area underneath the cable winch! Respect the instructions provided in the wind turbine signalization and in the technical documentation addressed to the operating and maintenance personnel.

Danger!

Life-threatening hazard - working under suspended loads!

Never stay under suspended loads.

The design of the pre-assembled power module (PPM), as well as the hybrid towers, are based on the 2-1/2 level PPM. However, the components are assembled separately and next to each other on the entry level. Thus, suspension points are not designed.

PUBLIC – May be distributed external to GE for permitting purposes only.
UNCONTROLLED when printed or transmitted electronically.
© 2020 General Electric Company and/or its affiliates. All rights reserved.

Hooking Points on the Pre-Assembled Power Module (PPM) 3 MW platform ONLY

Several hooking points marked in signal yellow are located on each section of the PPM.

The hooking points of the respective section must be used when carrying out work which requires removal of the installed fall protection systems or safety rails.

Respect the instructions provided in the wind turbine signalization and in the technical documentation addressed to the operating and maintenance personnel.

PUBLIC – May be distributed external to GE for permitting purposes only.
UNCONTROLLED when printed or transmitted electronically.
© 2020 General Electric Company and/or its affiliates. All rights reserved.

Hatch converter level 3 MW platform ONLY

The converter level has a hatch opening in the floor. This hatch is for use of the WTGS winch down to door level (controller level) and for support of the ventilation inside of the PPM. Therefore it should be left open and only be closed for access to the converter level.

Open the hatch on the converter level. To arrest the hatch in upright position, extract the railing from inside of the hatch.

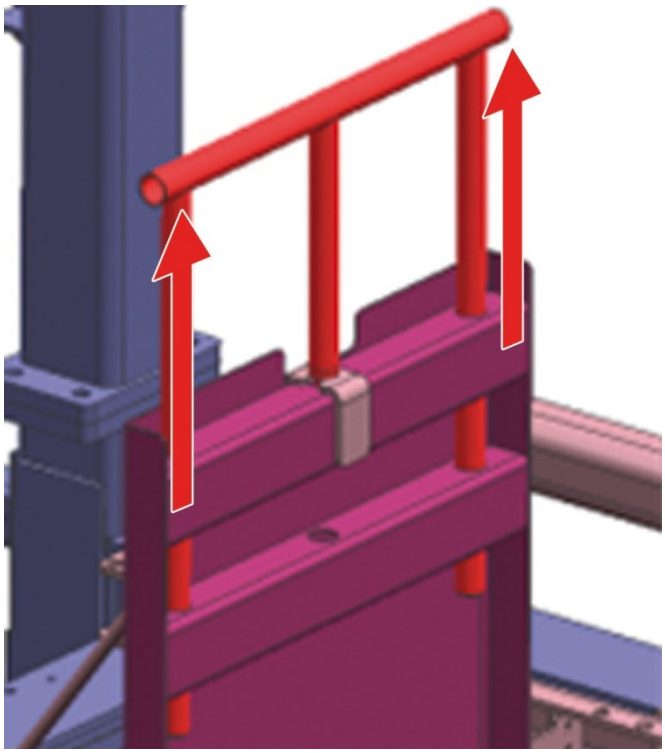

Fig. 22: Hatch converter level with extracted railing

Lock the railing with the hatch bar.

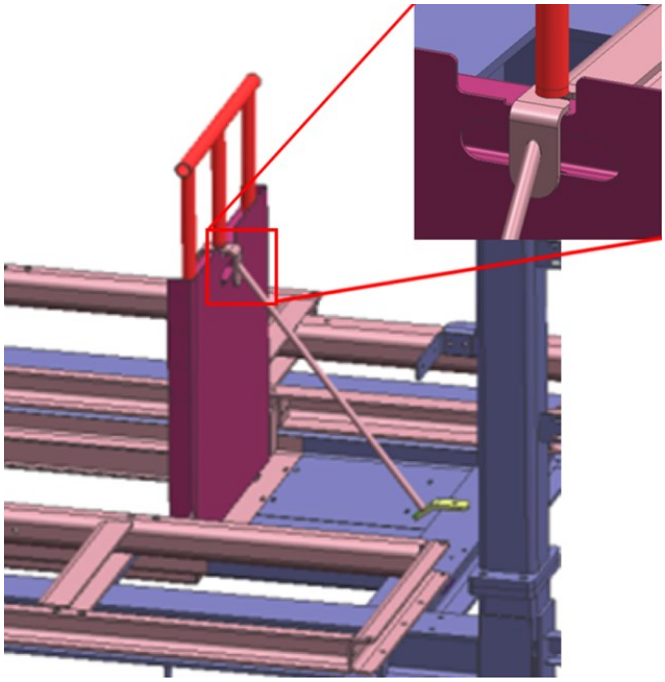

Fig. 23: Locking the railing with the hatch bar

PUBLIC – May be distributed external to GE for permitting purposes only.
UNCONTROLLED when printed or transmitted electronically.
© 2020 General Electric Company and/or its affiliates. All rights reserved.

Bolt the hatch bar to the console. 3 MW platform ONLY

Warning!

Danger of falling from heights!

- Do not stay on the inside of the converter level behind the opening when the hatch is open.
- Non-observance of this warning notice can lead to death or serious injury!

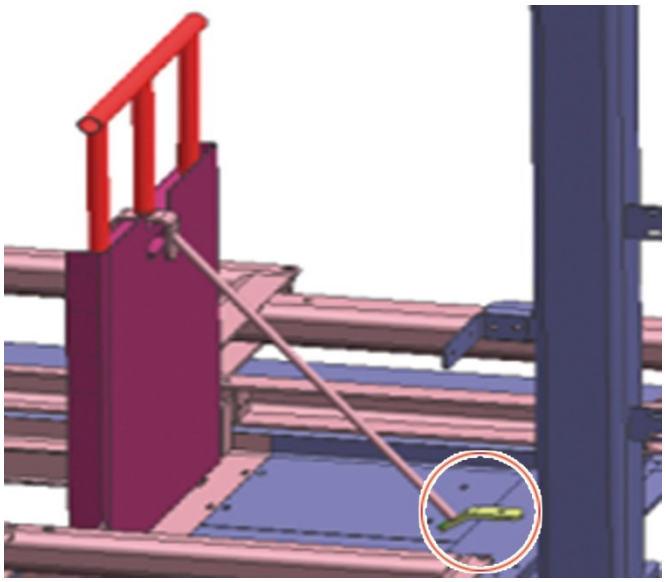

Fig. 24: Bolting the hatch bar to the console

The hatch bar can be placed at the console column when not in use.

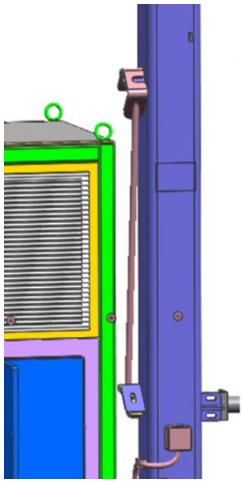

Fig. 25: Hatch bar placed at the console column

PUBLIC – May be distributed external to GE for permitting purposes only.
UNCONTROLLED when printed or transmitted electronically.
© 2020 General Electric Company and/or its affiliates. All rights reserved.

8.2.3 2-1/2 Level PPM 3 MW platform ONLY

When using the cable winch of the WTGS at the Controller level, do not stay in the area underneath the cable winch! Respect the instructions provided in the wind turbine signalization and in the technical documentation addressed to the operating and maintenance personnel.

Danger!

Life-threatening hazard - working under suspended loads!

Never stay under suspended loads.

PUBLIC – May be distributed external to GE for permitting purposes only.
UNCONTROLLED when printed or transmitted electronically.
© 2020 General Electric Company and/or its affiliates. All rights reserved.

Hooking Points on the Pre-Assembled Power Module (PPM)

A total of three Safety Hooking Points are provided in the PPM. They are marked in signal yellow and are located in the Controller Level, two on columns and one above the Transformer Level hatch for rescue from this level. The hooking points must be used when carrying out work which requires removal of the installed fall protection systems or safety rails.

Respect the instructions provided in the wind turbine signalization and in the technical documentation addressed to the operating and maintenance personnel.

PUBLIC – May be distributed external to GE for permitting purposes only.
UNCONTROLLED when printed or transmitted electronically.
© 2020 General Electric Company and/or its affiliates. All rights reserved.

Transformer Level Considerations 3 MW platform ONLY

Please make sure that no object (like a cable or long tool) goes into the Transformer Level from other levels while the Medium Voltage or Auxiliary Transformers are energized.

In some PPM Configurations the Shadow Monitoring and Metering Panel Cabinets are not installed (Refer to the technical documentation addressed to the operating and maintenance personnel). In this case, never attempt to climb down to the Transformer Level behind the Access Ladder, always climb down through the Hatch.

Respect the instructions provided in the wind turbine signalization and in the technical documentation addressed to the operating and maintenance personnel.

PUBLIC – May be distributed external to GE for permitting purposes only.
UNCONTROLLED when printed or transmitted electronically.
© 2020 General Electric Company and/or its affiliates. All rights reserved.

8.3 Medium-Voltage Switch Gear

In line with the national safety regulations, the medium-voltage switch gear may only be disconnected in accordance with the switching instruction by "personnel authorized to switch on and off" who have been briefed about the respective switch gear.

DANGER

Danger of Electricity!

- **FOLLOW YOUR RESPECTIVE LOCKOUT/TAGOUT INSTRUCTIONS! (also cf. Chapter 12)**
- Failure to follow this warning, will result in death or serious injury.

CAUTION

- **Attention! Check the work area/control cabinet before conclusion of the work!**
- Remove any unassembled components or tools or materials from the control cabinets. Any tools or materials left behind in the control cabinets result in unsafe working conditions for the service technicians when the wind turbine generator system is returned to operation.
- Close and lock the control cabinets before the wind turbine generator system is returned to service.

PUBLIC – May be distributed external to GE for permitting purposes only.
UNCONTROLLED when printed or transmitted electronically.
© 2020 General Electric Company and/or its affiliates. All rights reserved.

8.4 Uptower Electrical System (Cypress platform only)

The Generator, Converter and MV transformer are in the Machine Head. For additional details reference to the technical documentation addressed to the operating and maintenance personnel.

PUBLIC – May be distributed external to GE for permitting purposes only.
UNCONTROLLED when printed or transmitted electronically.
© 2020 General Electric Company and/or its affiliates. All rights reserved.

8.5 Transformer

Danger!

Danger! High Voltage – Life-threatening hazard!

The medium-voltage switch gear must be safety isolated before the transformer cabinet is entered. The transformer cabinet is unlocked by means of a key located in a key box inside the switchgear unit.

The transformer must be de-energized before maintenance work is carried out on the transformer or near the transformer (e.g. inspection of the anchor bolts, etc.)!

Portable lamps need to be used for entering the transformer level.

Before energizing a dry-type transformer either initially or after any shutdown period in which the unit has cooled to ambient temperature, the transformer should be inspected for evidence of moisture and the insulation resistance should be checked. If there is evidence of moisture/condensation/ water on or around the MV transformer, or if the insulation resistance is low, the transformer cannot be energized until it is safe to do so. Suggested insulation resistance test methods include ANSI/IEEE C57.12.11.

The transformer cabinet must be locked again after completion of the work!

PLEASE OBSERVE THE RESPECTIVE LOCKOUT / TAGOUT SWITCHING INSTRUCTIONS! (cf. Chapter 12)

Danger!

Danger to health or life when entering a confined space!

The transformer room may be considered a confined space. Review and follow the High Risk Operations Procedure RE EHS 7.4 P01 "Confined Spaces Entry" if you need to access to this area.

8.6 Low Voltage Main Distribution and Main Control Panel/MCPD

DANGER

Danger from electrical current!

- **FOLLOW YOUR RESPECTIVE LOCKOUT/TAGOUT INSTRUCTIONS! (also cf. Chapter 12)**
- All personnel remaining in the WTGS must be located between the person carrying out the measurements and the tower entrance during voltage measurements on the low voltage main distribution / MCPD or on the MCC.
- Failure to follow this warning, will result in death or serious injury.

PUBLIC – May be distributed external to GE for permitting purposes only.
UNCONTROLLED when printed or transmitted electronically.
© 2020 General Electric Company and/or its affiliates. All rights reserved.

Danger!

Attention! Check the work area/control cabinet before conclusion of the work!

Remove any unassembled components or tools or materials from the control cabinets. Any tools or materials left behind in the control cabinets result in unsafe working conditions for the service technicians when the wind turbine generator system is returned to operation.

Close and lock the control cabinets before the wind turbine generator system is returned to service.

Danger!

Danger from electrical voltage!

Before beginning any maintenance work, ensure that the main control cabinet has been disconnected from all energy sources in accordance with the currently applicable Lockout/Tagout instructions. Wear appropriate electrical PPE for entrance into energized cabinets.

Danger!

Danger from electrical voltage!

Be aware of the energy stored within the UPS inside the Main Control Cabinet or Top Box (**Cypress** Platform Only). The UPS inside the MCC/MCPD/Top Box must be disconnected, in addition to disconnecting power to the MCC/MCPD/Top Box, to properly LOTO the MCC/MCPD/Top Box.

Danger!

Check the control cabinet/work area before conclusion of work!

Remove any unassembled components or tools or materials from the control cabinet. Any of those items left behind in the control cabinet result in unsafe working conditions for the service technicians when the wind turbine generator system is returned to operation.

8.7 Frequency Converter

DANGER

Danger from electrical current!

- **FOLLOW YOUR RESPECTIVE LOCKOUT/TAGOUT INSTRUCTIONS! (also cf. Chapter 12)**
- All personnel remaining in the WTGS must be located between the person carrying out the measurements and the tower entrance during voltage measurements on the frequency converter.
- Failure to follow this warning, will result in death or serious injury.

PUBLIC – May be distributed external to GE for permitting purposes only.
UNCONTROLLED when printed or transmitted electronically.
© 2020 General Electric Company and/or its affiliates. All rights reserved.

Danger!

Fire Hazard!

Ensure that you have a fire extinguisher (optional feature) with you when carrying out work on the converters/LVMD/MCPD/Top Box.

Attention!

Danger to personal health and environment!

The converter cooling system may contain liquids that, if released, could harm your personal health or the environment

Danger!

Attention! Check the work area/control cabinet before conclusion of the work!

Remove any unassembled components or tools or materials from the control cabinets. Any tools or materials left behind in the control cabinets result in unsafe working conditions for the service technicians when the wind turbine generator system is returned to operation.

Close and lock the control cabinets before the wind turbine generator system is returned to service.

8.8 Nacelle

Warning!

Do not mount a working platform!

The nacelle is not designed for the lowering of a working platform!

PUBLIC – May be distributed external to GE for permitting purposes only.
UNCONTROLLED when printed or transmitted electronically.
© 2020 General Electric Company and/or its affiliates. All rights reserved.

8.9 Anemometer and Wind Vane

The anemometer and the wind vane are intensely heated in WTGs with cold weather equipment!

Attention!

Hot surface!

Disconnect the anemometer and the wind vane from the supply and allow both to cool down prior to maintenance.

Physical contact may cause burns.

PUBLIC – May be distributed external to GE for permitting purposes only.
UNCONTROLLED when printed or transmitted electronically.
© 2020 General Electric Company and/or its affiliates. All rights reserved.

8.10 Pitch Electrical Control Cabinets Inside the Hub – Axis and Battery (3MW) Ultracaps (Cypress platform)

DANGER

Danger from electrical voltage!

- Before beginning any maintenance work, ensure that the control cabinets have been disconnected from all energy sources in accordance with the currently applicable Lockout/Tagout instructions.
- In addition to the main circuits, take any supplementary or auxiliary circuits into account.
- Wear appropriate electrical PPE for entrance into energized cabinets

This signal word is used to indicate an imminently hazardous situation which, if not avoided, **will** result in **death or serious injury**.

Danger!

Check the control cabinet/work area before conclusion of work!

Remove any unassembled components or tools or materials from the control cabinet. Any of those items left behind in the control cabinet result in unsafe working conditions for the service technicians when the wind turbine generator system is returned to operation.

Danger!

Danger from electrical voltage!

All axis and battery or ultracaps cabinet doors must be securely latched in place before the system is reenergized to avoid exposure to the potentially hazardous transient voltages that are present during startup.

PUBLIC – May be distributed external to GE for permitting purposes only.
UNCONTROLLED when printed or transmitted electronically.
© 2020 General Electric Company and/or its affiliates. All rights reserved.

9 Conduct in Emergency Situations

9.1 Conduct in Case of Fire

In principle the WTGS consists of fire-resistant materials. However:

Warning!

Fire, open lights and smoking are prohibited!

If a fire does occur, however, **call the fire department immediately!**

State the following information:

- Name of the person calling
- What is on fire
- Where the fire is located (seat of the fire / location of the plant)
- Wind direction and wind strength

Note the following information in the case of fire:

- Saving lives has priority over fire-fighting
- Alarm all personnel who are in the WTGS
- Use the escape routes described in Chapter 9.2 – ensure that you are familiar with the various escape routes.
- Do not use the hoisting passenger suspension devices like elevators or climbing assists.
- Burning debris can be expected to fall down if there is a fire in the nacelle or the upper part of the tower.
- If the wind turbine generator system is still in operation, it must be stopped and a large area around the plant cordoned off.
- Close the door of the plant.

PUBLIC – May be distributed external to GE for permitting purposes only.
UNCONTROLLED when printed or transmitted electronically.
© 2020 General Electric Company and/or its affiliates. All rights reserved.

9.1.1 Fire-Fighting

Fire-fighting may only be carried out by immediately fighting an incipient fire using the optional fire extinguishers available in the plant. The locations of the firefighting equipment in the tower and the nacelle are marked.

If the incipient fire cannot be extinguished within a short time, abandon any further attempts to extinguish the fire and call the fire department immediately.

In addition to the direct danger from the fire, a combustion toxicity hazard and the danger of asphyxia could also arise. As a result, move in a crouched position if smoke develops and also crouch down when attempting to extinguish the fire.

Danger!

Attempts to extinguish a fire may lead to very serious burns!

Do not make any attempts to extinguish the fire, since the appropriate fire-fighting methods cannot normally be carried out without reservation (minimum clearances cannot be adhered to). Very serious burns could be the result.

9.1.2 Fire in the Tower - Person in the Nacelle

- Leave the WTGS immediately via the second escape route (cf. Chapter 9.2.2).
- Abseiling device in the nacelle - emergency exit using the abseiling device

9.1.3 Fire in the Nacelle - Person in the Nacelle

- Attempt to extinguish the fire.

If unsuccessful:

- Leave the danger area immediately via the first escape route (cf. Chapter 9.2.1).
- Do **not** use the hoisting passenger suspension device.
- Do **not** use the abseiling device.

PUBLIC – May be distributed external to GE for permitting purposes only.
UNCONTROLLED when printed or transmitted electronically.
© 2020 General Electric Company and/or its affiliates. All rights reserved.

9.1.4 Fire in the Transformer

WARNING

Danger of serious injuries or death caused by fire!

- **Do not make any attempts to extinguish the fire – High voltage! Conventional fire extinguishers are not suitable.**
- **Leave the WTGS immediately!**
- Read the instructions below.

Non-observance of this warning could lead to serious burns or death.

In the case of transformers in the tower:

- Leave the WTGS via the second escape route (cf. Chapter 9.2.2)

In the case of transformers in the transformer station:

- Leave the WTGS via the first escape route (cf. Chapter 9.2.1).

Fire-fighting may only be carried out by trained personnel.

In the case of transformers in transformer pod:

- Leave the WTGS via the first escape route (cf. Chapter 9.2.1).

9.2 Escape Routes

Attention!

Keep escape routes free!

All escape and rescue routes have to be kept free from obstructions (tools, equipment, waste etc.) to enable a quick departure from the plant.

9.2.1 First Escape Route

In case of fire, leave the plant immediately. The first escape route from the nacelle is down the ladder in the tower. The descent is facilitated and made safer by resting platforms every 9 m. The tower platform openings, walkways in tower and machine head comply dimension wise with the EN 50308 requirements. In case of emergency do not use the hoisting passenger suspension device!

9.2.2 Second Escape Route

If the descent through the tower is no longer possible, use the second escape route. (Abseiling with the abseiling device). This either leads over the roof of the nacelle (hooking point on roof rail) or through the optional emergency descent hatch (hooking point on the swinging gallows in the nacelle).

PUBLIC – May be distributed external to GE for permitting purposes only.
UNCONTROLLED when printed or transmitted electronically.
© 2020 General Electric Company and/or its affiliates. All rights reserved.

9.2.3 Escape Plan

Respect the escape plan instructions provided in the wind turbine signalization and in the technical documentation addressed to the operating and maintenance personnel.

Correct use of the abseiling device (cf. Chapter 5.4 on page 24):

- Make sure your safety harness is on correctly.
- Secure yourself against falling by means of the lanyard.

WARNING

Danger from incorrect use of the abseiling device!

- The abseiling device can also be used by two people to abseil.
- **Read the instructions before beginning the abseiling operation.**
- In an emergency, your life could depend on the abseiling device working properly!

9.3 Information for Rescue and Emergency Personnel

The rescue services and the emergency personnel must be equipped with their own personal protective equipment (safety harness, etc.). The rescue/emergency personnel must bring with them all the equipment required for rescuing personnel from the hub, nacelle or tower.

The information stated in this safety manual must also be read by the rescue / emergency personnel.

9.4 Oil Spill – Immediate Measures

The objective of the immediate measures is to prevent or at least to contain a further uncontrolled escape of water-endangering substances and keep the areas of threatened or contaminated soil as small as possible, under consideration of safety engineering requirements.

NOTE

Inform yourself about the oils used beforehand. The safety data sheets provide details of Water Hazard Classes and suitable measures for combating oil pollution.

Measures

1. Decide and act quickly, so that the amount of oil reaching the environment is kept as small as possible.
2. Prevent further discharge (closure of valves, temporary sealing of cracks and holes, e.g. by means of sealing rags, sealing bags, sealing wedges, collection in containers, pumping out, transfer, etc.)

PUBLIC – May be distributed external to GE for permitting purposes only.
UNCONTROLLED when printed or transmitted electronically.
© 2020 General Electric Company and/or its affiliates. All rights reserved.

3. Bind the discharged oil – use approved oil binding agents and oil binder mats if the oil could not be pumped out or skimmed off in time. The damage can be limited by means of collecting containers, rolled foils and a shovel.
4. Prevent the oil from getting into the soil or bodies of water.
5. Remove contaminated soil.
6. Take the contaminated oil-absorbing materials to a local specialist waste disposal company for material recovery / conversion to energy or disposal. The national regulations are to be complied with.

PUBLIC – May be distributed external to GE for permitting purposes only.
UNCONTROLLED when printed or transmitted electronically.
© 2020 General Electric Company and/or its affiliates. All rights reserved.

10 Staying in the Wind Turbine Generator System

Personnel may not stay inside the WTGS and maintenance or repair work may not be carried out in or on the WTGS under power supply. There is a danger of accident and a danger to life and limb. In order to prevent accidents, the following actions are to be carried out in the following order before and on entering the wind turbine generator system:

1. Shut down the WTGS and secure against an unauthorized return to service
2. Put on the personal protective equipment
3. Disable the power supply for the work to be carried out – carry out corresponding Lockout/Tagout instructions (cf. Chapter 12)

Staying in the WTGS while it is in operation is unavoidable in the case of certain maintenance and repair work. In such cases, particular care is called for and ear protection with SNR > 25 dB (noise reduction index) must be worn.

In addition, the following safety regulations are to be complied with without fail:

- As a general principle, no person may stay in the WTGS during a gale or a thunderstorm! If a thunderstorm comes up, the WTGS must be left immediately.
- The WTGS may only be entered when a second person is available to provide assistance or call for help in the case of an accident.
- The entrance door to the tower must be kept closed or, if the door needs to be open, it must be properly secured to prevent it from flying open and getting warped.
- Long open hair, loose clothing (e.g. flapping coats, tops with wide sleeves or trousers with wide legs) and scarves, ribbons, headscarves or jewelry may not be worn in the WTGS! There is a fundamental danger of injury as a result of getting caught, trapped or drawn in by rotating elements! Clothing must always be tailored to suit the respective work and the weather conditions.
- Switch-on and shut-down procedures in accordance with the operating manual are to be complied with for all work which concerns the operation and adjustment of the WTGS and its safety equipment.
- If any changes in the operating characteristics which are relevant to safety or any faults arise in the WTGS, it must be shut down immediately and the event reported to GE Renewable Energy or the customer (if a maintenance contract has not been concluded with GE Renewable Energy).

PUBLIC – May be distributed external to GE for permitting purposes only.
UNCONTROLLED when printed or transmitted electronically.
© 2020 General Electric Company and/or its affiliates. All rights reserved.

10.1 Approaching and Entering a Frosted Wind Turbine Generator System

Before parking near the turbine, stop approx. 350 m from the turbine and check the rotor blades for ice by means of binoculars and the sound of the rotation of the blades. If the turbine is running and ice is present on the rotor blades, call for a remote stop.
Once the blades have come to a complete standstill, verify that none of the blades is located over the entrance door of the turbine. If this is the case, call for a remote traverse of the yaw drive in any direction, so that the rotor is positioned on the opposite side of the door of the turbine. As soon as the rotor is correctly positioned, call for a remote stop of the yaw drive and ask for confirmation of this operation.

Once the above conditions have been complied with, park your vehicle at a safe distance from the WTGS (at least 100 m). Watch out for falling ice as you approach the tower. If the wind is blowing against the opposite side of the door (or into the rotor at this point), you must proceed with extreme caution, since falling ice could be blown in your direction.

Warning!

Danger of slipping as a result of icy conditions!

There is danger of slipping as a result of the frozen ground and ice on the foundation and the stairs.

Sprinkle de-icing salt or sand over the foundation.

Use the handrail when going up the stairs.

Leave the immediate vicinity of the WTG after completing your work. Watch out for falling ice. Get into your vehicle. Do not call for a remote re-activation of the yaw drive and restart of the turbine until you are approximately 350 m away from the WTG.

PUBLIC – May be distributed external to GE for permitting purposes only.
UNCONTROLLED when printed or transmitted electronically.
© 2020 General Electric Company and/or its affiliates. All rights reserved.

10.2 Shut-down of the Wind Turbine Generator System

Before starting any service work, the wind turbine generator system must be deactivated. Proceed as follows:

1. Inform the remote monitoring division (before entering the plant)
2. Inform the operator / customer (before entering the plant)
3. For Standard Bachmann units only (without web pages): Deactivate the remote monitoring program:

- Telephone list
  Deactivate the checkbox in the menu "Configuration" / "Call list"/ and confirm.
- PC
  Deactivate the checkbox in the menu "Configuration" / "PC" /.
- SMS
  Deactivate the checkbox in the menu "Configuration" / "SMS" /.
- Cityruf paging service
  Deactivate the checkbox in the menu "Configuration" / "Cityruf" /.
- Fax
  Deactivate the checkbox in the menu "Configuration" / "Fax" /.

NOTE: Line 3 not applicable to WTG without a Turbine PC

4. Set the key-operated switch to "Repair/Maintenance".
5. Press the "Stop" button to shut-down the plant manually.

Danger!

Danger of accident for remaining persons in the WTG!

The WTGS must remain shut down as long as personnel are in the plant. Before it is returned to service by authorized personnel, check without fail that nobody is in the plant. Otherwise the danger of an accident arises!

PUBLIC – May be distributed external to GE for permitting purposes only.
UNCONTROLLED when printed or transmitted electronically.
© 2020 General Electric Company and/or its affiliates. All rights reserved.

10.3 Climbing the Tower

- Only persons who are physically fit and capable of coping with the ascent may climb the WTGS.
- The WTGS must be shut down and secured against unauthorized start-up before the tower is ascended. The WTGS must remain shut down as long as anybody is climbing the tower or is on the tower platform.
- The entrance door to the tower must be kept locked, in order to inhibit access to unauthorized persons.
- In order to avoid accidents caused by falling objects, nobody may stay under the ladder while somebody is ascending the tower. Even a small screwdriver can cause very serious injuries if it drops from a great height.

Danger!

Danger from falling objects!

Objects falling from height can cause very serious injuries irrespective of their size and weight!

Tools and equipment must be secured while climbing. Never stay in the vicinity of the ladder while somebody is ascending or descending. The ladder may only be used by one person at a time. Only after this person has reached an intermediate platform and has closed the tower hatch or has reached the ground in the tower base and stepped back from the ladder, the next person may approach the ladder.

- The safety harness must always be put on correctly before ascending the tower.
- Always check the safety harness and the entire safety equipment prior to use. Damaged PPE may never be used.
- Safety boots and a hardhat must be worn when ascending the tower. Gloves must be worn while climbing.
- The maximum possible fall path must be kept to a minimum by means of rope-shortening devices or similar.
- Only use marked hooking points with an adequate load-bearing capacity.
- The tower may only be ascended by means of the ladder installed inside the tower or the hoisting passenger suspension devices / service platform which may be installed. (Follow the operating instructions of the manufacturer).
- In case of the wire rope fall arrest system, the wire grab arrester must run freely on the rope while ascending and descending the tower. Never touch the wire grab arrester while climbing/descending. Otherwise there is a danger of injury!
- In case of the rail-slider hook fall arrest system, the slider hook must run freely in the rail while ascending and descending the tower. Never touch the slider hook while climbing/descending. Otherwise there is a danger of injury!
- Both hands must be kept free during the ascent or descent. Tools, lubricants and other material may only be transported in a suitable bag. Permanent "3-point contact" with the ladder is only guaranteed by this means.

PUBLIC – May be distributed external to GE for permitting purposes only.
UNCONTROLLED when printed or transmitted electronically.
© 2020 General Electric Company and/or its affiliates. All rights reserved.

- Greater care needs to be exercised when climbing the ladder in wet conditions or if the tower is covered in ice.
- Only unhook the lanyard after you have reached the tower platform and the access hatch has been closed.
- Ensure that you are always protected by at least one lanyard with a fall arrest block.
- The rest platforms in the tower are fitted with hatches that must be kept closed at all times. The platform hatches must therefore be opened on reaching a platform and closed again immediately after crossing to the next section of the tower.

WARNING

Tower-Lift hatches should not be covered with material in case of ladder evacuation.

PUBLIC – May be distributed external to GE for permitting purposes only.
UNCONTROLLED when printed or transmitted electronically.
© 2020 General Electric Company and/or its affiliates. All rights reserved.

10.4 Deactivation of the Yaw Drive

Yaw stop switches are located in the tower base, below the nacelle and on the top box in the nacelle. The yaw drive and the automatic nacelle adjustment are disabled in the "Off" switch position, so that the nacelle is technically prevented from moving if there is a change in wind direction.

10.5 Entering the Nacelle

Before entering the nacelle, the machine head have to be turned into a direction where at minimum one ladder can be accessed safely. The appropriate angles are detailed in the technical documentation addressed to the operating and maintenance personnel.

After the ladders are in a safe position as shown above the yaw stop switch on the uppermost tower platform must be placed in the "Off" position before crossing from the tower to the nacelle. The yaw drive and the automatic nacelle adjustment are thereby disabled.

Depending on the position of the nacelle, the available simple ladder is hooked into one of the holders to prevent the ladder from slipping. Some of the WTGS are provided with a permanently installed extension ladder.

When working in the nacelle or in the hub in half-light or darkness always carry a flashlight.

Hooking points are available in the vicinity of every platform.

PUBLIC – May be distributed external to GE for permitting purposes only.
UNCONTROLLED when printed or transmitted electronically.
© 2020 General Electric Company and/or its affiliates. All rights reserved.

10.6 Nacelle Walkway and Working Platforms

All platforms in the nacelle enclosure are rated for distributed loads of 300 kg/m2 or a point load of 150 kg on a 200 mm x 200 mm area of any given panel. Note that the point load limit includes personnel weight, PPE and any additional load carried. Do not overload the platforms!

10.7 Walking on the Roof of the Nacelle

DANGER

Falling Hazard! Warning: strong wind currents!

- Before climbing out of the nacelle enclosure through the roof hatch above the gearbox, the lanyard must be hooked on to the nearest hooking point on the nacelle.
- The roof rail is to be selected as a hooking point for all other work on the roof of the nacelle.
- For the BTP nacelle, the roof rail has been properly designed and tested to support 2 people, however the individual hooking points are for 1 person only.

Warning!

Danger from overloaded Nacelle Roof!

Respect the instructions provided in the wind turbine signalization and in the technical documentation addressed to the operating and maintenance personnel.

Overloading the nacelle roof may lead to falling hazards and could cause bad injuries or death.

The roof of the nacelle may only be walked on to enter the rotor hub and for carrying out work on the wind vane, the anemometer or the obstruction lights. Only trained or oriented personnel are permitted to work on the roof of the nacelle. Work on the roof of the nacelle is only allowed up to maximum wind speeds of 15 m/s.

PUBLIC – May be distributed external to GE for permitting purposes only.
UNCONTROLLED when printed or transmitted electronically.
© 2020 General Electric Company and/or its affiliates. All rights reserved.

Walking on the Roof with Ice and Snow

If you have to walk on the roof of the nacelle or climb into the hub, first of all ensure that the rotor blades are in the Y-position before you open the hatch. Otherwise there is danger of injury from falling pieces of ice.

Danger!

Danger of Slipping and Falling Hazard as a result of icy conditions!

There is a high risk of slipping and falling if the roof of the nacelle and the spinner/hub are covered by snow and ice.

Completely remove any snow and ice from the roof before walking on it. Sprinkle sand on the cleared areas

Do not walk on the roof/spinner/hub if the snow and ice cannot be removed completely and the danger of slipping cannot be excluded.

10.8 Entering the Rotor Hub

DANGER

Falling Hazard! Warning: strong wind currents!

- Before climbing out of the nacelle enclosure through the roof hatch above the gearbox, the lanyard must be hooked on to the rail on the spinner (machines with spinner) or on to the rail on the nacelle (machines without spinner).

DANGER

Danger to health or life when entering a confined space!

- The hub may be considered a confined space. Review and follow the High Risk Operations Procedure RE EHS 7.4 P01 "Confined Spaces Entry" if you need to access to this area.

NOTICE

Maintenance work inside the hub may only be carried out at wind speeds (10 min average value) up to the values below.

- Always engage one of the rotor locks.
- To engage the rotor lock follow the instructions given in Chapter 6.2 Rotor Lock on page 31.
- Follow the respective Lockout/Tagout instructions! (cf. Chapter 12)

PUBLIC – May be distributed external to GE for permitting purposes only.
UNCONTROLLED when printed or transmitted electronically.
© 2020 General Electric Company and/or its affiliates. All rights reserved.

Only trained or oriented personnel are permitted to enter the rotor hub. Depending on the model of turbine being serviced and weather conditions, the permissible wind speed to enter the rotor hub will vary. For additional details reference to the technical documentation addressed to the operating and maintenance personnel.

In case the rotor needs to be locked for maintenance activities on the LSS side, for example for internal or external blade works, the allowable maximum 10 min. average windspeed can be increased to 12m/s by additionally applying the HSS lock at the same time (130/137 m rotors only).

The wind speed can be read on the display of the top box or in the controller's web HMI.

10.9 Activation of the Wind Turbine Generator System

Danger!

Danger of accident for remaining persons in the WTG!

The WTGS must remain shut down as long as personnel are in the plant. Before it is returned to service by authorized personnel, check without fail that nobody is in the plant. Otherwise the danger of an accident arises!

Proceed as follows to return the WTGS to service:

1. Make an entry in the service life card of the WTGS.
   Read the yield in the menu "WTGS data" / Yield data / and enter in the service life card.
2. Check that no errors are present.
3. Press the "Reset" button and than the "Start" button.
4. Switch off “Repair/Maintenance” mode.
5. For Standard Bachmann units only (without web pages): Activate the remote monitoring program:

- Telephone list
  Activate the checkbox in the menu "Configuration" / "Call list"/ and confirm.
- PC
  Activate the checkbox in the menu "Configuration" / "PC" /.
- SMS
  Activate the checkbox in the menu "Configuration" / "SMS" /.
- Cityruf paging service
  Activate the checkbox in the menu "Configuration" / "Cityruf" /.
- Fax
  Activate the checkbox in the menu "Configuration" / "Fax" /.

NOTE: Line 3 not applicable to WTG without a Turbine PC

6. Initiate a test alarm in the Main Menu / Service Functions -> "Send Test Alarm".
7. Inform the remote monitoring division and check that the test error arrives.
8. Inform the operator / customer.

PUBLIC – May be distributed external to GE for permitting purposes only.
UNCONTROLLED when printed or transmitted electronically.
© 2020 General Electric Company and/or its affiliates. All rights reserved.

11 Information on Maintenance and Troubleshooting

Only trained or instructed staff may be deployed!

Trainee personnel or personnel undergoing orientation or general training may only carry out work on the wind turbine generator system under the constant supervision of an experienced person.

Personnel must familiarize themselves with the work environment around the wind turbine generator system before starting work!

As it is possible to start the plant by means of the remote monitoring system, the WTGS must be shut down for maintenance work as described in Chapter 10.2 Shut-down of the Wind Turbine Generator System on page 67. In addition, the service switch on the control cabinet must be placed in the "Maintenance" or "Repair" position. Once the maintenance or repair work has been completed, the service switch must be returned to the "Automatic" position.

Maintenance/inspection of the cable winch in the tower is the responsibility of the operator and must be carried out in accordance with the operating and maintenance instructions of the supplier of the cable winch.

Time limits for recurring tests/inspections prescribed or stated in the operating manual must be adhered to.

Suitable workshop equipment is essential for carrying out maintenance measures.

Work on electric equipment of the WTGS may only be carried out by a skilled electrician or a equipment specific trained technician (US), or by instructed persons under the guidance and supervision of a skilled electrician in accordance with the electrical engineering regulations.

Personnel may only enter the blades after finishing a training on the Blade Rescue Procedure.

Any safety equipment which has to be dismantled to carry out maintenance and repair work must be re-installed and checked immediately after the maintenance and repair work has been completed!

The wind turbine generator system, in particular the connections and bolted connections, must be cleaned of any oil, consumables and process materials, dirt or old preservative agents at the beginning of any maintenance/repair/conservation work.

Only entrust experienced persons with the fastening of loads.

Individual components and larger modules which need to be exchanged must be carefully attached and secured to lifting gear, in order to minimize the danger that emanates from them. Only use suitable lifting gear and load suspension devices which are in a technically perfect condition and have an adequate load bearing capacity!

Follow the operating instructions of the winch manufacturer.

Never stay or work below suspended loads.

PUBLIC – May be distributed external to GE for permitting purposes only.
UNCONTROLLED when printed or transmitted electronically.
© 2020 General Electric Company and/or its affiliates. All rights reserved.

Use the specified or other safe ascent equipment and working platforms to carry out installation work above head height. Wear fall protection equipment when carrying out maintenance work at great heights. Keep all handles, steps, safety rails, platforms, stages and ladders free of dirt.

Ensure that consumables and process materials and replacement parts are disposed of safely and in an environmentally-friendly manner!

CAUTION

Fire Hazard!

- As a principle the storage of combustible and easily flammable material in the wind turbine generator system **is not permitted**.

NOTICE

Risk of Damage to the Wind Turbine Generator from unreleased brake!

- The rotor lock and the highs speed shaft brake must always be released before leaving the turbine.
- Make sure that the machine is idling.

NOTICE

Risk of Damage to the Wind Turbine Generator from Hydraulic Pressure!

- After finishing work on the high speed shaft brake, make sure that the pressure on the hydraulic system of the brake has been released.
- Check that the pressure gauge reads 0 bar.

11.1 Hot Work

11.1.1 Scope

This chapter provides items to consider when hot work must be accomplished. Since the need to accomplish hot work can be the result of many scenarios, this chapter is not a detailed plan for accomplishing hot work. The involved maintenance team and/or facility owner should use this as a source of information to assist in development of the specific safe work practices and supporting documents required to authorize hot work activities. In all cases, work shall be conducted in accordance with the applicable corporate and governmental health and safety rules and regulations, the site safety plan, and a hot work permit.

Given the inherent risks to personnel and equipment, alternatives to hot work should be fully considered and be given preference wherever possible.

PUBLIC – May be distributed external to GE for permitting purposes only.
UNCONTROLLED when printed or transmitted electronically.
© 2020 General Electric Company and/or its affiliates. All rights reserved.

11.1.2 Preparation

Once the need for hot work is identified, a team of the appropriate personnel should be assembled to conduct an evaluation of risks and countermeasures. This team should also be charged with identifying, where possible, alternatives to hot work:

Identify the actual hot work to be accomplished:

- welding - creates sparks, slag, fumes and heat
- cutting - creates sparks, slag, fumes and heat
- grinding - creates sparks, fumes and localized heat
- other

Identify the location of the work:

- down-tower
- up-tower
- machine head
- other

Identify the potentially ignitable materials within the expected hazard zone created by hot work sparks, slag and heat:

- composite materials (e.g., fiberglass)
- insulation
- lubricants
- other

PUBLIC – May be distributed external to GE for permitting purposes only.
UNCONTROLLED when printed or transmitted electronically.
© 2020 General Electric Company and/or its affiliates. All rights reserved.

Define the protective measures to be implemented prior to initiation of hot work:

- Removal of excess lubricants
- Installation of fire blankets/fire shields
- Deployment of hand-held fire extinguishers (optional feature)
- Assignment of dedicated “fire watch” personnel to monitor the operation (this may include a down-tower watch for up-tower hot work)

Define the work team size and Personnel Protective Equipment (PPE) requirements:

- Consider the available space at the work location
- Ventilation versus fume masks versus air line respirators

11.1.3 Documentation

A hot work permit should be issued for the duration of the work, posted in the work area, and filed upon completion of the hot work.

The appropriate documentation of the repair/hot work is to be filed upon completion of the work.

PUBLIC – May be distributed external to GE for permitting purposes only.
UNCONTROLLED when printed or transmitted electronically.
© 2020 General Electric Company and/or its affiliates. All rights reserved.

12 Power Disconnection and Isolation Procedures (Lockout/Tagout Instructions)

Pursuant to EN 50308 and OSHA standard 29 CFR 1910.147, wind turbine generator systems must be equipped with devices to disconnect and isolate them from all their energy sources during inspection and maintenance work.

These disconnecting/energy-isolating devices are prescribed for all mechanical, electrical and hydraulic energy sources.

GE Renewable Energy advises the plant operator/owner to develop specific procedures for the power disconnection and isolation of every individual subsystem.

Local and national regulations must be taken into account when developing workplace-specific Lockout/Tagout instructions.

The disconnection/isolation points are marked in the plant-specific circuit diagrams and hydraulic schematics, which are supplied with the respective WTGS.

Procedures for the Lockout/Tagout of power disconnection and isolation devices must consider the following aspects:

12.1 Identification of Installations, Processes, Circuits

- Individual mechanical,
- electrical or
- hydraulic subsystems

12.2 Preparation for Shutdown/Notification of Affected Employees

All personnel who may be affected must be notified before Lockout/Tagout devices are installed and after they have been removed. In addition to this procedure, authorized employees must be aware of any additional safety requirements prescribed for working on this type of equipment.

Affected employees who work on or near an installation, which is about to be disconnected, and on which Lockout/Tagout devices are to be mounted must be notified thereof.

12.3 Identification of Energy Sources and Strengths

- electrical
- hydraulic
- mechanical

PUBLIC – May be distributed external to GE for permitting purposes only.
UNCONTROLLED when printed or transmitted electronically.
© 2020 General Electric Company and/or its affiliates. All rights reserved.

12.4 Deactivation of Energy Sources and the Mounting of Energy Control Devices

The power disconnection and isolation devices (e.g. disconnecting switches or load interrupter switches, valves etc.) must be positioned in such a way that they interrupt the energy flow to installations, processes or circuits. The authorized employees are obliged to mount and secure Lockout/Tagout devices to these. They must hereby ensure that the power disconnection and isolation devices are "locked out" until further notice and remain in their safety or "Off" position.

12.5 Control of Stored Energy

WARNING

Residual risks from stored energy!

- Follow the respective Lockout/Tagout Instructions! (cf. Chapter 12)

The authorized employee must ensure that all potentially hazardous energy in any form (stored, residual, chemical or potential energy) is relieved, dissipated, contained, discharged or otherwise controlled. Additional measures may be necessary to prevent the re-accumulation or re-storage of energy, in order to protect personnel. Stored energy can form e.g. in batteries, capacitors, through gravity or in chemical lines.

12.6 Verification of Isolation

The authorized employee must verify that the isolation and de-energization of the respective installation, process or circuit has actually been carried out before maintenance work may be started. The check must confirm that the installation, process or circuit has achieved a "zero" energy state. (Test equipment, circuit activation attempts, measuring devices, visual inspections, etc. can be used to verify the zero energy state.) The check must start with a visual inspection of the status of the isolation device.

PUBLIC – May be distributed external to GE for permitting purposes only.
UNCONTROLLED when printed or transmitted electronically.
© 2020 General Electric Company and/or its affiliates. All rights reserved.

13 Reconnection of the Installation to the Supply

The authorized employee must carry out the following measures before returning the installation to service:

- Inspection of the work area to ensure that all items which are not required for the operation of the installation have been removed and that all the guards have been replaced, that the machine/installation, process or circuit is operational and that all personnel are in a safe location.
- Removal of all locks, tags and other Lockout/Tagout devices from all power disconnection and isolation devices by the authorized employee who previously attached these LOTO devices.
- Notification of affected personnel that the energy supply is about to be restored to the machine/installation, process or circuit.
- Visual inspection and/or cycle test to verify that the service or maintenance work has been successfully completed. Provided that the work has been completed, the machine/installation, process or circuit may be returned to service. Otherwise, the requisite procedural steps must be repeated.
- Correct sequential run-up of the installation, process or circuit.

WTGS operators must ensure that suitable disconnection regulations are available for their plants and construction sites and that they are implemented. GE Renewable Energy has developed installation-specific Lockout/Tagout procedures for the activities listed below. This list does not claim to be complete, however. It may be advisable to develop additional procedures as a result of changes to installations or to comply with construction site-specific disconnection regulations.

PUBLIC – May be distributed external to GE for permitting purposes only.
UNCONTROLLED when printed or transmitted electronically.
© 2020 General Electric Company and/or its affiliates. All rights reserved.

ANNEX: Items and Installations which are subject to Inspection pursuant to the Accident Prevention Regulations

Article to be tested	Test before the initial operation	Exceptional tests	Regular tests	Proof of test	Regulations
Winches	To be checked by a technically competent person		Regular check by a technically competent person in accordance with the manufacturer's instructions and operational conditions.	Inspect and test log book and inspection sticker	Manufacturer's instructions
Doors Emergency exits	To be checked by a technically competent person. Doors must be executed so that they are self-closing, open in the direction of escape and can be easily opened from the inside at all times without auxiliary means.		Regular check by the operator. Once a year by a technically competent person.	Documen-tary evidence	Manufacturer's instructions
Escape routes			In case of danger, the work areas must be able to evacuated via escape routes or escape equipment. It must be ensured that at least one escape route can also be used in the case of a power failure. Escape routes or escape equipment are: routes via ladders and abseiling devices.		
Hoisting passenger suspension device	To be checked by an expert. In addition to the experts of the Technical Inspection Association (TÜV), only experts for the inspection of hoisting passenger suspension devices who are authorized by the trade association are considered to be experts for the purposes of this safety regulation. The operator must ensure that a test run is carried out at the installation location in all directions of movement with the working load of the passenger suspension device in the presence of the supervisor before the initial operation.	The operator must ensure that hoisting passenger suspension devices are subjected to an exceptional test by a qualified person after cases of damage or particular events which could affect the carrying capacity, as well as after any repair work.	All components of the hoisting passenger suspension device must be inspected for operational safety by a technically competent person at least once a year. Shorter test intervals may arise as a result of the service conditions. The manufacturer's instructions are to be followed.	Docu-mentary evidence	Manufacturer's instructions
Fire extinguishers (optional feature)			Regular check by a technically competent person or expert in accordance with the national regulations.	Inspection sticker or test report	

PUBLIC – May be distributed external to GE for permitting purposes only.
UNCONTROLLED when printed or transmitted electronically.
© 2020 General Electric Company and/or its affiliates. All rights reserved.

Article to be tested	Test before the initial operation	Exceptional tests	Regular tests	Proof of test	Regulations
Personal protective equipment against falling (safety harness)	Inspection of the fall protection rail by a technically competent person.		Users must check the PPE for its proper condition and reliable operation before it is used. A technically competent person must inspect the PPE for perfect condition at regular intervals. The manufacturer's instructions must be followed.	Inspect and test log book, inspection sticker	Manufacturer's instructions
Abseiling device	To be inspected by a technically competent person.	To be inspected by a technically competent person after any use.	Users must check the abseiling device for its proper condition and reliable operation before it is used. A technically competent person must inspect the abseiling device for perfect condition at regular intervals. The manufacturer's instructions must be followed.	Inspect and test log book, inspection sticker	Manufacturer's instructions
Ladder		A technically competent person checks the orderly condition of mechanical ladders after any alterations or repairs.	A technically competent person checks the orderly condition of the ladders and steps once a year. Irrespective of this, the user must check the suitability and condition of the ladders before use. The manufacturer's instructions are to be followed.	Inspect and test log book, inspection sticker	Manufacturer's instructions
Electrical equipment	Check by a qualified electrician or under the supervision of a qualified electrician. (Also after alteration or repair) The test before the initial operation in accordance with Section 1 is not necessary if the manufacturer or installer confirms that the electrical installations and equipment are designed to comply with the provisions of this accident prevention regulation.		At specified intervals: The intervals are to be calculated in such a way that any defects which can be expected to arise are found in due time. The relevant electrotechnical regulations are to be complied with for the check. At the request of the trade association, an inspection and test log book with specified entries is to be kept. The manufacturer's instructions are to be followed.	Inspect and test log book	Manufacturer's instructions
First aid box (optional feature)	Pursuant to the Law on Medical Devices, which has been in force since 1st January 1995*, bandaging materials must have a CE-marking but do not have to have a use-by date. If a use-by date is stated, however, the Law on Medical Devices prohibits further use after expiry of the use-by date under penalty of a fine. First aid material without a use-by date must only be replaced in the event of soiling or damage. With the exception of plaster material, it remains usable over a long period, provided that it is stored in a clean and dry place.				

PUBLIC – May be distributed external to GE for permitting purposes only.
UNCONTROLLED when printed or transmitted electronically.
© 2020 General Electric Company and/or its affiliates. All rights reserved.

This foregoing document was electronically filed with the Public Utilities

Commission of Ohio Docketing Information System on

9/24/2020 4:01:25 PM

in

Case No(s). 18-1607-EL-BGN

Summary: Notice - Release of Turbine Safety Manuals electronically filed by Christine M.T. Pirik on behalf of Firelands Wind, LLC