CONSTRUCTION NOTICE FOR THE

F5484 – 138 kV COLUMBIA SUBSTATION

PUCO Case No. 18-1571-EL-BNR

Submitted to:

The Ohio Power Siting Board

Pursuant to OAC 4906-06

Submitted by:

Duke Energy Ohio, Inc.

November 2018

Construction Notification

This Construction Notice has been prepared by Duke Energy Ohio, Inc. (hereafter "Duke Energy") in accordance with Ohio Administrative Code (OAC) Section **4906-6-05** for the review of Accelerated Certificate Applications. The following section corresponds to the administrative code sections for the requirements of a Construction Notice Application.

4906-06-05 ACCELERATED APPLICATION REQUIREMENTS

4906-6-05 (B): General Information

4906-6-05 (B)(1) Name, Reference Number, Brief Description, and Letter of Notification Requirement

Name of Project: Duke Energy F5484 – 138 kV Columbia Substation

2018 LTFR Reference: The Project was included in the 2018 Duke Energy Long Term Forecast Report, Case No. 18-484-EL-FOR, pg. 69.

Brief Description of the Project:

Duke Energy proposes to: reconductor approximately 1,820 feet (0.34 mile) of existing 138 kV transmission line from Structure 155 to Structure 158 and from Structure 161 to Structure 163; remove approximately 220 feet (0.04 mile) of existing 138 kV transmission line from Structure 158 to Structure 161; and install approximately 550 feet (0.10 mile) of new 138 kV transmission line from Structure 158 to the future Columbia Substation East Bay and from Structure 161 to the future Columbia Substation West Bay. Reconductor, removal, and new installation activities will occur within 100-foot wide Duke Energy transmission line corridor right-of-way (ROW). As part of these activities, 3 existing wooden poles will be replaced with wooden poles, two existing wooden poles will be replaced with steel poles, 2 existing wooden H-frame structures will be replaced with steel 3-pole structures, and 2 new steel structures will be installed.

The project initiates at Structure 163 located west of State Route 48, south of Mason-Morrow-Millgrove Road (39.370906, -84.226623) and terminates at Structure 155 located west of State Route 48, north of Winding River Road (39.365858, -84.223694).

Construction Notice Requirement:

This Project qualifies as a Construction Notice filing because it meets the requirements outlined in OAC 4906-1-01, Appendix A, items (1)(a) and (2)(a). Item (1)(a) allows the filing of a Construction Notice for "*New construction, extension, or relocation of single or multiple circuit electric power transmission line(s), or upgrading existing transmission or distribution line(s) for operation at a higher transmission voltage, as follows: (a) Line(s)*

not greater than 0.2 miles in length." Item (2)(a) similarly allows the filing of a Construction Notice for "Adding new circuits on existing structures designed for multiple circuit use, replacing conductors on existing structures with larger or bundled conductors, adding structures to an existing transmission line, or replacing structures with a different type of structure, for the distance of: (a) Two miles or less."

4906-6-05 (B)(2): Need for the Project

The purpose of the F5484 – 138 kV Columbia Substation Project is to facilitate the construction of the future Duke Energy Columbia Substation as well as to maintain the integrity of existing Duke Energy structures and ensure adequate power supplies to current and future utility customers in the area. The project is also needed to ensure safety within the existing easements and remain in compliance with current transmission line standards. This area includes, but is not limited to Warren County, Ohio. The existing F5484 transmission line provides 138 kV electric transmission service to residential and commercial/industrial facilities and serves as a pathway in the transmission grid between Hamilton and Union townships to the cities of Maineville, South Lebanon, Lebanon and surrounding areas. Due to the increased customer load growth, circuits will not be able to reliably operate at the base case contingency condition, which may result in customer load being disrupted. Moreover, to ensure the integrity of the transmission line, certain existing wooden structures will be upgraded to galvanized steel structures.

The rebuilt transmission line will continue to provide the service area with 138 kV transmission service, but will be rebuilt with upgraded conductor capacity to enable more efficient future voltage conversion and allow support for future load growth in the area. The Project will relieve loading and improve reliability on nearby circuits.

4906-6-05 (B)(3): Location of the Project Relative to Existing or Proposed Lines

The location of the project in relation to existing or proposed lines and substations is depicted in Attachment A: Figure 3 and Attachment B.

4906-6-05 (B)(4): Alternatives Considered

The proposed Project will occur entirely within existing Duke Energy property and/or within Duke Energy ROW. No additional long-term impacts to adjacent properties are anticipated as a result of the Project. Therefore, the current alignment is the only reasonable alternative available and no alternatives were considered.

4906-6-05 (B)(5): Public Information Program

Due to the proposed Project being located entirely within existing Duke Energy property and/or Duke Energy ROW, a public information program for this Project has not been developed. However, Duke Energy has worked closely with property owners during the development of the Project. Duke Energy has mailed letters, via first class mail, to affected landowners, tenants, contiguous owners, and anyone else Duke Energy determined may be affected by the Project. See Attachment C for a copy of the letter and list of landowners in receipt of the letter.

4906-6-05 (B)(6): Construction Schedule

Construction is planned to begin December 12, 2018, upon approval of this Construction Notice. The Project is anticipated to be completed and in-service by May 2019.

4906-6-05 (B)(7): Area Map

Attachment A depicts the general location of the Project. Attachment A, Figure 1 shows the general project vicinity depicted on a USGS quadrangle topographic map. Attachment A, Figure 2 depicts the planned transmission line location, ecological resources in the project vicinity, and additional details on an aerial imagery map. Attachment A, Figure 3 depicts the planned transmission line location in relation to existing F5484 facilities.

4906-6-05 (B)(8): Property Owner List

The proposed project is located primarily on Duke Energy property and within existing Duke Energy ROW. Property owners have been notified as outlined in this response [Part 4906-6-05 (B)(5)]. See Attachment C for a copy of the letter and list of landowners in receipt of the letter.

4906-6-05 (B)(9): Technical Features of the Project

The Project involves the: reconductor of approximately 1,820 feet (0.34 mile) of existing 138 kV transmission line from Structure 155 to Structure 158 and from Structure 161 to Structure 163; removal of approximately 220 feet (0.04 mile) of existing 138 kV transmission line from Structure 158 to Structure 161; installation of approximately 550 feet (0.10 mile) of new 138 kV transmission line from Structure 158 to the future Columbia Substation East Bay and from Structure 161 to the future Columbia Substation West Bay. As part of these activities, three (3) existing wooden poles will be replaced with wooden poles, two (2) existing wooden poles will be replaced with steel poles, two (2) existing wooden H-frame structures will be replaced with steel 3-pole structures, and

two (2) new steel structures will be installed. Structure diagrams are provided in Attachment B.

4906-6-05 (B)(9)(a): Operating Characteristics

Voltage:	138kV
Structure Type:	Four (4) Galvanized Steel Single Pole Structures
	Three (3) Wooden Single Pole Structures
	Two (2) Custom Steel 3-Pole Structures
Conductors:	All Structures: 954 ACSR 45/7
Static Wire:	All Structures: 7#8 Alumoweld
	Structures 157 - 158: 7#8 Alumoweld and OPGW AC 99/699 27
Insulators:	138kV Polymer post insulators and Porcelain suspension insulators

Right-of-Way/Land Requirements: Duke Energy owns the easements on which the transmission lines will be constructed.

4906-6-05 (B)(9)(b): Electric and Magnetic Fields

Information concerning the electric and magnetic fields is not required as the proposed project is not located within 100-feet of an occupied residence or institution.

4906-6-05 (B)(9)(c): Estimated Cost

The estimated cost for the proposed project is approximately $4,800,000.

4906-6-05 (B)(10): SOCIAL AND ECOLOGICAL IMPACTS

4906-6-05 (B)(10)(a): Land Uses

The project is located within South Lebanon, Union Township, and unincorporated Hamilton Township, Warren County. The project is centered approximately 150 feet west of State Route 48 at the intersection of Union and Hamilton Townships. South Lebanon, which covers 3.5 square miles, contained a population of 4,746 people based on the 2016 census data. The land use immediately surrounding the Project area is

commercial/industrial, secondary growth deciduous forest, residential, recreation (golf course) and maintained Right-of-Way.

4906-6-05 (B)(10)(b): Agricultural Land

Agricultural land vegetation assemblage does not exist within the project area.

4906-6-05 (B)(10)(c): Archaeological or Cultural Resources

The Ohio History Connection, Ohio's Historic Preservation Office (OHPO), online mapping system was consulted to identify previously recorded cultural resources within 1.6 km (1 mi) of the project area (the study area). The OHPO records check indicates that no cultural resources have been previously identified within the project area. At this time, the project area has not been surveyed for cultural resources. However, given that the majority of the project area is located in areas that are steeply sloped, in wetlands, or in areas that have been previously disturbed by mechanical equipment, it does not appear that impacts to significant cultural resources will occur as a result of the project. See Attachment D, Cultural Resources Literature Review.

It does not appear that a Federal Nexus, requiring further coordination with the OHPO, will occur for the project, as there are likely no impacts to wetlands or streams that would require Federal permitting.

4906-6-05 (B)(10)(d): Local, State, and Federal Requirements

A copy of the approved NPDES Construction Site General Permit from the Ohio Environmental Protection Agency (Ohio EPA) is available in Attachment E (*Stormwater Pollution Prevention Plan, Appendix E*). The NPDES General Permit number is OHC000005.

Authorization from the United States Army Corps of Engineers (USACE) has been requested for the crossing of the Little Miami River, a Section 10 Navigable Water. The permit application for this authorization was submitted on October 22, 2018. This permit application is available in Attachment H.

No other local, state or federal permit or other authorizations are required for the project.

4906-6-05 (B)(10)(e): Endangered, Threatened, and Rare Species Investigation

Several sources of information were consulted to further define the potential habitat of listed species that occur within the County of the Project. Attachment A, Table 1, contains list a of the Rare, Threatened and Endangered (RTE) species known to occur

within Warren County and their potential to occur within the Study Area based on their habitat requirements and observations during the field survey.

Coordination with the U.S. Fish and Wildlife Service (USFWS) and the Ohio Department of Natural Resources Division of Wildlife (ODNR-DOW) was initiated on July 16, 2018. Correspondence from the USFWS regarding RTE located within a ½-mile of the Study Area was received July 23, 2018 (Attachment F). The correspondence from USFWS indicated that there are no verified records of federally listed endangered, threatened, or candidate species, or their habitats existing within the project site or vicinity. Correspondence from the ODNR-DOW was received September 18, 2018 (Attachment F). The correspondence from ODNR-DOW indicated that one state and federal endangered mussel species, one state threatened mussel species, and one state threatened fish species have been documented within ½ mile of the project area. However, as all of these species are aquatic and likely associated with the Little Miami River, the project is not likely to impact these species as no in water work will occur.

The entire Project Area was field surveyed by Cardno, Inc. (Cardno) as part of contracted services to assess ecological impacts. This included habitat assessments to identify RTE species and their habitat, specifically Indiana Bat and Northern Long-eared Bat roost trees. Based on Cardno's field inspection, the Project Study Area consisted of commercial/industrial turf, secondary growth deciduous forest, and maintained right-of-way. Suitable bat roost habitat was observed within the approximate 0.93 acre portion of the study area which consisted of secondary growth forest located outside the actively maintained ROW. However, based on the USFWS recommendation that all tree clearing activities occur between October 1 and March 31, impacts to the Indiana Bat or Northern Long-eared Bat are not expected. Additionally, it does not appear that a Federal Nexus requiring further coordination with the USFWS will occur, as there are no expected impacts to wetlands or streams.

4906-6-05 (B)(10)(f): Areas of Ecological Concern

As a part of the investigation, Duke Energy hired Cardno to conduct an investigation for areas of ecological concern. As a part of Cardno's investigation, a request was submitted to the ODNR Natural Heritage Program and U.S. Fish and Wildlife Service on July 16, 2018, to research the presence of any unique ecological sites, geological features, animal assemblages, scenic rivers state wildlife area, nature preserves, parks or forest, national wildlife refuges, or other protected areas within one (1) mile of the Project area using the ODNR natural Heritage Database. A copy of ODNR's Response and USFWS response letters are included in Attachment F.

The ODNR response on September 18, 2018 indicated that 1 Scenic River (Little Miami River), 1 Scenic River State Park, and 2 Scenic River Lands/Easements were located within one (1) mile of the Project area. However, as all of these areas are associated with the Little Miami River, the project entails reconductoring an existing crossing of the river, and no in water work will occur; the project is not likely to impact these areas.

As a part of the field investigation and ecological assessment, Cardno conducted a wetland delineation and stream assessment of the Project area and potential access points. Cardno's investigation included an approximate 11.7 acre study area around the proposed centerline, access roads, and additional workspace areas. The Study Area was over-surveyed to account for potential reconfigurations compared to the final Project Area. During the investigation, Cardno identified two (6) potentially regulated waters within the Project's Study Area. This includes one (1) forested wetland (Wetland 1), one (1) emergent wetland (Wetland 2), one (1) ephemeral stream (Stream 1), two (2) intermittent streams (Streams 3 and 4) and one (1) perennial stream (Stream 2, Little Miami River). See Attachment G, Regulated Waters Delineation Report.

The proposed construction access plan as shown in Attachment E, Appendix A was developed by Cardno to avoid and/or minimize disturbance to all streams and wetlands. No impacts to regulated waters or RTE habitat are anticipated by the Project.

The 100-year floodplain of the Little Miami River is crossed by the project. However, all support structures are located outside of the floodplain and minimum clearances above the water are maintained by conductor spanning this length. No floodplain permit is required.

4906-6-05 (B)(10)(g): Other Information

To the best of Duke Energy's knowledge, no unusual conditions exist that would result in environmental, social, health, or safety impacts. Construction and operation of the proposed Project will meet all applicable safety standards established by the Occupational Safety and Health Administration, and will be in accordance with the requirements specified in the latest revision of the National Electric Safety Code as adopted by the Public Utilities Commission of Ohio. The Stormwater Pollution Prevention Plan (SWPPP), depicting the project's access plan, is included in Attachment E.

4906-6-07: Document of Construction Notice Transmittal and Availability for Public Review

Copies of this Construction Notice have been sent to the appropriate offices of South Lebanon, Union Township, Hamilton Township, and Warren County. A notice of the availability of this application will be provided in the Lebanon public library within 7 days of filing this application.

Attachment A

Figures and Tables

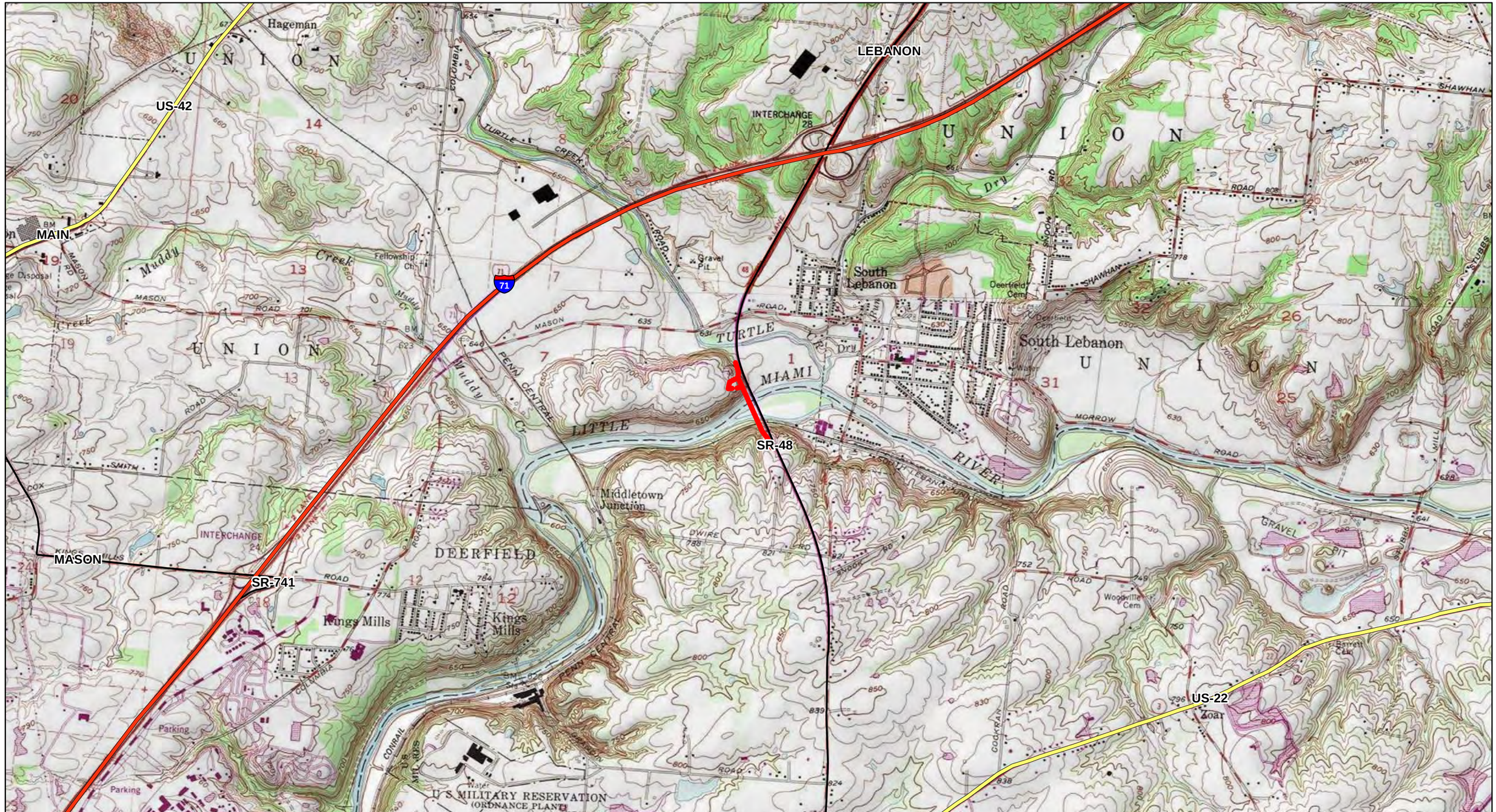

REFERENCE:
ESRI WORLD IMAGERY, OBTAINED THROUGH ESRI WORLD IMAGERY MICROSOFT CORPORATION, ACCESSED 01/2017

0 1,000 2,000 Feet
1 inch = 2,000 feet

Interstate
State Highway
US Highway
Local Road
Project CenterLine

DUKE ENERGY.
Cardno

FIGURE 1

OPSB BNR FILING
F5484 – 138kV COLUMBIA SUBSTATION
DUKE ENERGY
PROJECT LOCATION

DRAWN BY: BDPM
CHECKED: CJ
DATE: 10/12/2018
APPROVED: JT

R:\Projects\15\156\156720M_DukeEnergy9193\M59_SOW22_5484 138kVColumbiaSubstation\GIS\MXD\OPSB\SWPPP_M59ColumbiaSta_1_Location.mxd

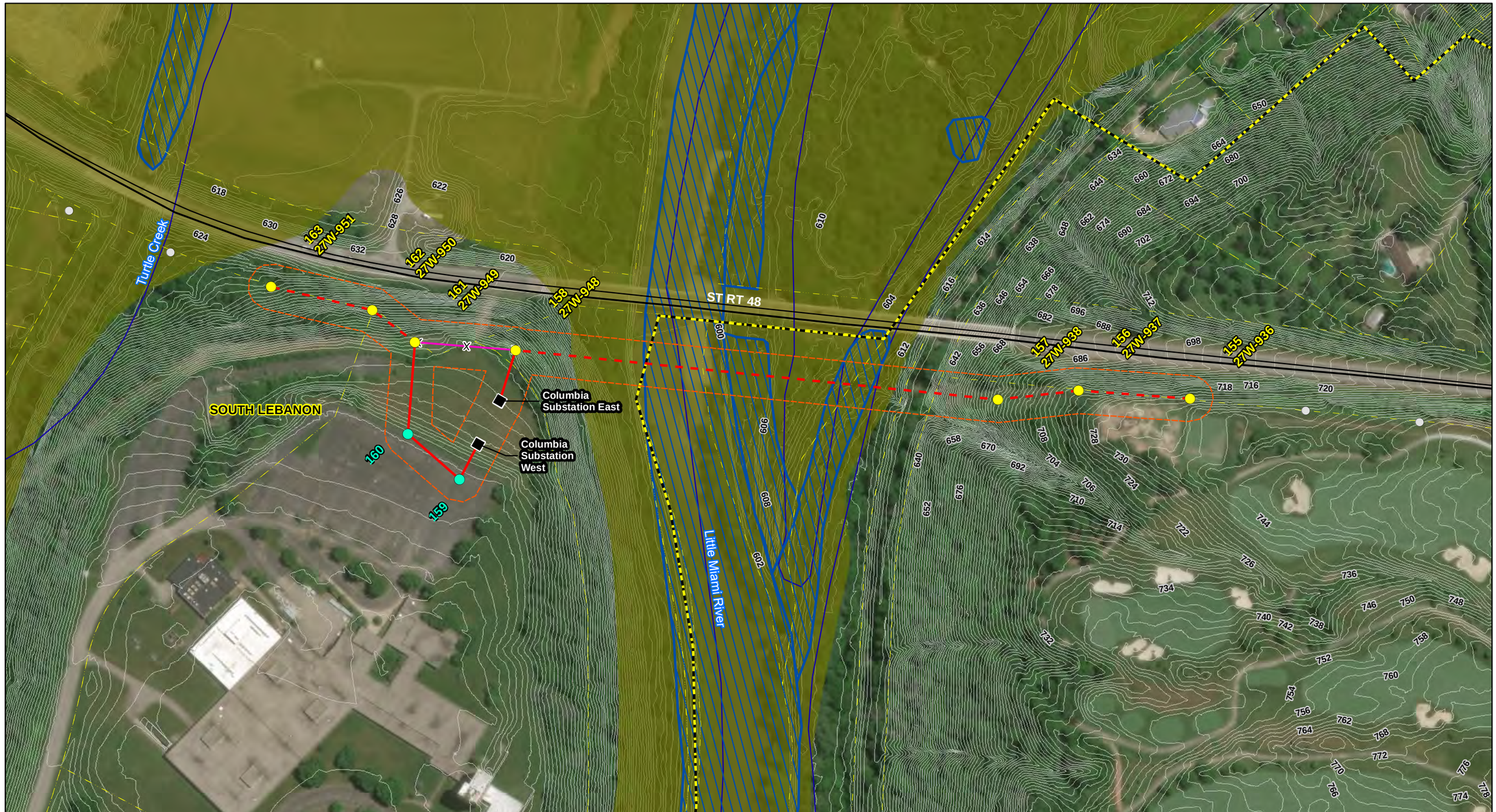

SHEET INDEX

REFERENCE:
ESRI WORLD IMAGERY, OBTAINED THROUGH ESRI WORLD IMAGERY MICROSOFT CORPORATION, ACCESSED 01/2017

0 100 200 Feet
1 inch = 200 feet

- Interstate
- State Highway
- US Highway
- Local Road
- Municipal Boundary
- Parcels
- Future Facility
- Proposed New Structure
- Proposed Replacement Structure
- Existing Structure
- 100ft Corridor
- Proposed New T-Line
- Existing T-Line Reconductor
- Existing T-Line Removal
- 100yr Floodplain
- NWI Wetland
- NHD Flowline
- 2' Contour Line

DUKE ENERGY.

Cardno

FIGURE 2

OPSB BNR FILING
F5484 – 138kV COLUMBIA SUBSTATION
DUKE ENERGY
PROJECT DETAILS

DRAWN BY: BDPM
CHECKED: CJ
DATE: 10/11/2018
APPROVED: JT

R:\Projects\15\156\156720M_DukeEnergy9193\M59_SOW22_5484 138kVColumbiaSubstation\GIS\MXD\OPSB\SWPPP_M59ColumbiaSta_2_Details.mxd

SPECIES	COMMON NAME	STATE STATUS[1]	FEDERAL STATUS[2]	HABITAT[3]	BREEDING PERIOD[3]	PROBABILITY OF OCCURENCE[4]
Warren County						
MAMMAL						
Eptesicus fuscus	Big Brown Bat	SSC	---	Wooded and Semi wooded areas, mainly along streams.	August-October	Moderate
Lasiurus borealis	Red Bat	SSC	---	Wooded area and wooded edges and hedgerows.	August-September	Moderate
Lasiurus cinereus	Hoary Bat	SSC	---	Wooded, Semi wooded areas, and wooded edges.	August -October	Moderate
Microtus ochrogaster	Prairie Vole	SSC	---	Dry, vegetated areas; pastures, fields, meadows and prairies	May-October	Low
Microtus pinetorum	Woodland Vole	SSC	---	Wooded areas with thick organic material on forest floor.	April-August	Low
Eptesicus fuscus	Big Brown Bat	SSC	---	Wooded areas and urban residential buildings, bridges, or similar	May-July	Moderate
Myotis sodalis	Indiana Myotis	E	E	Wooded and Semi wooded areas, mainly along streams. Maternity colonies are around hollow trees.	August-October	Moderate
Myotis septentrionalis	Northern long-eared Bat	SSC	T	Wooded and Semi wooded areas; live trees and in snags.	July-August	Moderate
Perimyotis subflavus	Tri-colored Bat	SSC	---	Edge habitats near areas of mixed agricultural use.	August-October	Moderate
Peromyscus maniculatus	Deer Mouse	SCC	---	Grasslands, brushlands, and agricultural fields.	Year round; mostly during warmer months	Low
Reithrodontomys humulis	Eastern Harvest Mouse	T	---	Open grassy areas such as abandoned fields, marshes or wet meadows.	April and August	Low
Synaptomys cooperi	Southern Bog Lemming	SSC	---	Low, moist areas, glasslands, mixed deciduous forests, freshwater wetlands, marshes and meadows.	Year-round	Low
Taxidea taxus	Badger	SSC	---	Open grasslands, agricultural areas and other treeless spaces.	July-August	Low
BIRD						
Dendroica cerulean	Cerulean Warbler	SSC	---	Deciduous hardwood forests, uplands, wet bottomlands, moist slopes.	May-June	Moderate
Accipiter striatus	Sharp-shinned Hawk	SSC	---	Coniferous forests and open mixed wooded areas	Mach-June	Low
Colinus virginianus	Northern Bobwhite	SSC	---	Open grasslands, row crops, and woody edges adjacent to open areas of tall grasses	February-October	Low
Dolichonyx oryzivorus	Bobolink	SSC	---	Open grasslands with moderate to dense vegetation. Prefers areas that lack woody species	May-June	Low
Certhia americana	Brown Creeper	SI	---	Forested wetlands, floodplains, or swamps.	Early Spring	Moderate
FISH						
Esox masquinongy	Muskellung	SSC	---	Lakes and large rivers; Prefer shallow water with a rocky bottom and heavy cover.	April	Low

Moxostoma carinatum	River Redhorse	SSC	---	Medium to large rocky rivers with moderate to strong currents. Usually found in long, deep run habitats.	Early June	Moderate
Noturus eleutherus	Mountain Madtom	T	---	Fast flowing clear riffles that are shallow.	June-July	Moderate
Noturus stigmosus	Northern Madtom	E	---	Large rivers in swift currents.	June-July	Moderate
Anguilla rostrata	American Eel	T	---	Freshwater streams, rivers, and ponds. Soft undisturbed bottom sediments	Year round	Low
INVERTEBRATE						
Alasmidonta marginata	Elktoe	SSC	---	Shallow to medium sized creeks or rivers.	June-July	Low
Cyclonaias tuberculate	Purple Wartyback	SSC	---	Large to medium sized rivers with a gravel or mixed sand substrates.	May-August	Moderate
Epioblasma triquetra	Snuffbox	E	E	Riffles areas of fast moving rivers and streams.	July-August	Moderate
Lasmigona compressa	Creek Heelsplitter	SSC	---	Medium to large rives in pools over compact sand and gravel, or mud patches near shore.	June-July	Moderate
Ligumia recta	Black Sandshell	T	---	Rivers, lakes and large streams in riffles over muddy to gravel substrates.	July-August	Low
Megalonaias nervosa	Washboard	E	---	Slow moving rivers and streams with muddy to rocky substrates.	August-October	Moderate
Obliquaria reflexa	Threehorn Wartyback	T	---	Large rivers with sand or gravel substrates.	July-August	Moderate
Orconectes sloanii	Sloan's Crayfish	T	---	Freshwater lakes and streams, under rocks and logs.	August-October	Low
Pleurobema clava	Clubshell	E	E	Medium to large rivers with gravel or sandy substrates.	July-August	Moderate
Ptychobranchus fasciolaris	Kidneyshell	SSC	---	Small to medium sized rivers in riffle areas with clear, swift moving water.	April-August	Moderate
Truncilla donaciformis	Fawnsfoot	T	---	Rivers and lakes in slower moving water. Usually in sand or gravel substrates.	April-May	Low
Truncilla truncate	Deertoe	SSC	---	Lakes and medium to large rivers. Usually in mud, sand or gravel substrates.	August-July	Low
Villosa fabalis	Rayed Bean	E	E	Small headwater creeks, sometimes found in large rivers. Prefers gravel or sand substrates.	Unknown; Egg-bearing females have been found in May.	Low
Toxolasma lividus	Purple Lilliput	E	---	Small to medium sized rivers in riffles, or immediately above riffles in sand, mud, or gravel	Year round	Low
Actinonaias ligamentina ligamentina	Mucket	X	---	Cobble or sand in moving water. Rarely in ponds or lakes	Year round	Low
REPTILE						
Sistrurus catenatus catenatus	Eastern Massasauga	E	C	Seasonal wetlands with mixed open grasslands and wood edge areas	Late Summer	Low
Heterodon platirhinos	Eastern Hognose Snake	SSC	---	Open wooded area, forest edge, prairies, and woodland meadow. Prefers loose soils	Spring and Fall; lays eggs in June and July	Moderate
AMPHIBIAN						

Acris crepitans crepitans	Eastern Cricket Frog	SSC	---	The shores of sparsely vegetated permanent ponds and streams.	April-June	Low
Hemidactylium scutatum	Four-toed Salamander	SSC	---	Boggy woodland ponds or swamps	Early Spring	Low
PLANT						
Trifolium stoloniferum	Running Buffalo Clover	---	E	Disturbed bottomland meadows. Disturbed sites that have shade part of the day.	n/a	Low

1. STATE STATUS - X = extirpated, E = endangered, T = threatened, R = rare, SSC = special concern, WL = watch list, SG = significant, SI = Special Interest ** = no status but rarity warrants concern
Ohio Department of Natural Resources, Division of Wildlife Website - http://wildlife.ohiodnr.gov/portals/wildlife/pdfs/publications/information/pub356.pdf (March 2016).

2. FEDERAL STATUS - E = endangered, T = threatened, R = rare, LELT = different listing for specific ranges or species, PE = proposed endangered , PT = proposed threatened, e/sa – appearance similar to a listed endanger species, C = candidate species, **= not listed
United States Fish and Wildlife Service, County Distribution of Federally-Listed Threatened, Endangered, Proposed, and Candidate Species - http://www.fws.gov/midwest/endangered/lists/ohio-cty.html (January 2017).

3. Habitats and Breeding Periods described by:
   a. NatureServe: An online encyclopedia of life [web application].2000. Version 1.1 Arlington, Virginia, USA: Association for Biodiversity information. Available: http://www.natureserve.org/ (Accessed July 5, 2018).
   b. United States Fish and Wildlife Service Rayed Bean Fact Sheet - http://www.fws.gov/midwest/endangered/clams/rayedbean/RayedBeanFactSheet.html (January 6, 2017).
   c. United States Fish and Wildlife Service Indiana Bat Fact Sheet - http://www.fws.gov/midwest/endangered/mammals/inba/index.html (January 6, 2017).
   d. United States Fish and Wildlife Service Northern Long-eared Bat Fact Sheet - http://www.fws.gov/midwest/endangered/mammals/nleb/index.html (January 6, 2017).
   e. United States Fish and Wildlife Service Eastern Massasauga Fact Sheet - http://www.fws.gov/midwest/endangered/mammals/inba/index.html (January 6, 2017).
   f. United States Fish and Wildlife Service Running buffalo clover Fact Sheet - http://www.fws.gov/midwest/endangered/mammals/nleb/index.html (January 6, 2017).

4. Likelihood of occurrence: None, Low, Moderate, or High based on best available data and selective field observations.

Attachment B

Proposed Site Plans and Project Area Location Relative to Existing Electric Lines

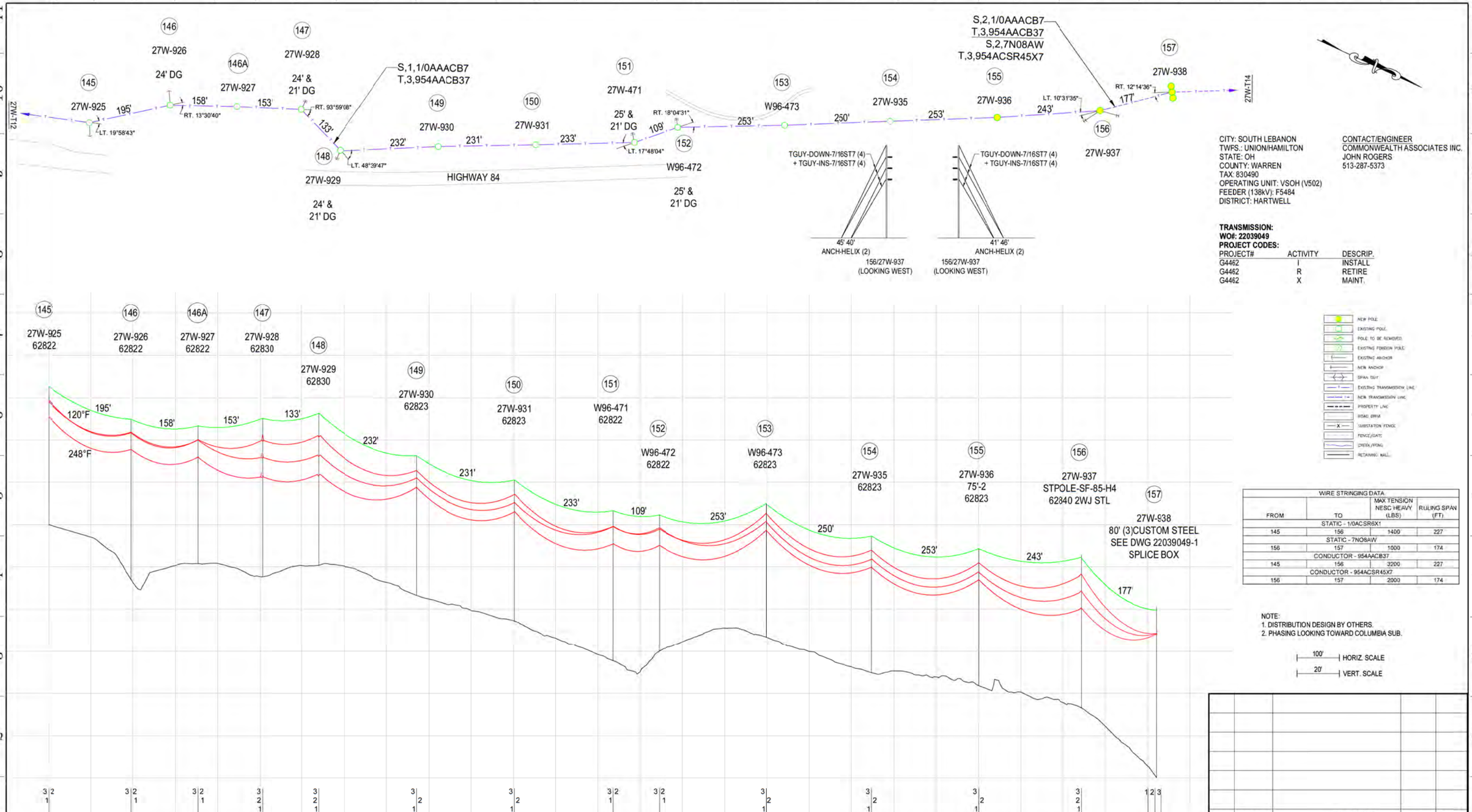

CITY: SOUTH LEBANON
TWFS.: UNION/HAMILTON
STATE: OH
COUNTY: WARREN
TAX: 830490
OPERATING UNIT: VSOH (V502)
FEEDER (138kV): F5484
DISTRICT: HARTWELL

CONTACT/ENGINEER
COMMONWEALTH ASSOCIATES INC.
JOHN ROGERS
513-287-5373

TRANSMISSION:
WO#: 22039049
PROJECT CODES:

PROJECT#	ACTIVITY	DESCRIP.
G4462	I	INSTALL
G4462	R	RETIRE
G4462	X	MAINT.

NEW POLE
EXISTING POLE
POLE TO BE REMOVED
EXISTING FOUNDION POLE
EXISTING ANCHOR
NEW ANCHOR
SPAN GUY
EXISTING TRANSMISSION LINE
NEW TRANSMISSION LINE
PROPERTY LINE
ROAD DRIVE
SUBSTATION FENCE
FENCE/GATE
CREEK/POND
RETAINING WALL

WIRE STRINGING DATA			
FROM	TO	MAX TENSION NESC HEAVY (LBS)	RULING SPAN (FT)
STATIC - 1/0ACSR6X1			
145	156	1400	227
STATIC - 7NO8AW			
156	157	1000	174
CONDUCTOR - 954AACB37			
145	156	3200	227
CONDUCTOR - 954ACSR45X7			
156	157	2000	174

NOTE:
1. DISTRIBUTION DESIGN BY OTHERS.
2. PHASING LOOKING TOWARD COLUMBIA SUB.

100' HORIZ. SCALE
20' VERT. SCALE

FOR CONSTRUCTION
02/23/18

NO.	DATE	REVISION	DRFT.	ENGR.

DUKE ENERGY.

INDEX: F5484
DESCRIPTION: 138,000V.
F5484 INSTALL LOOP FEED TO COLUMBIA SUBSTATION
DATE: 11/03/17
LOCATION: WARREN COUNTY, OHIO
DRAWN: JAM (CAI)
ENGINEER: JTL (CAI)
TRANSMISSION LINE ENGINEERING
CKD:
PAGE:
SCALE: H: 1"=100' V: 1"=20'
DWG NO: 27W-T13

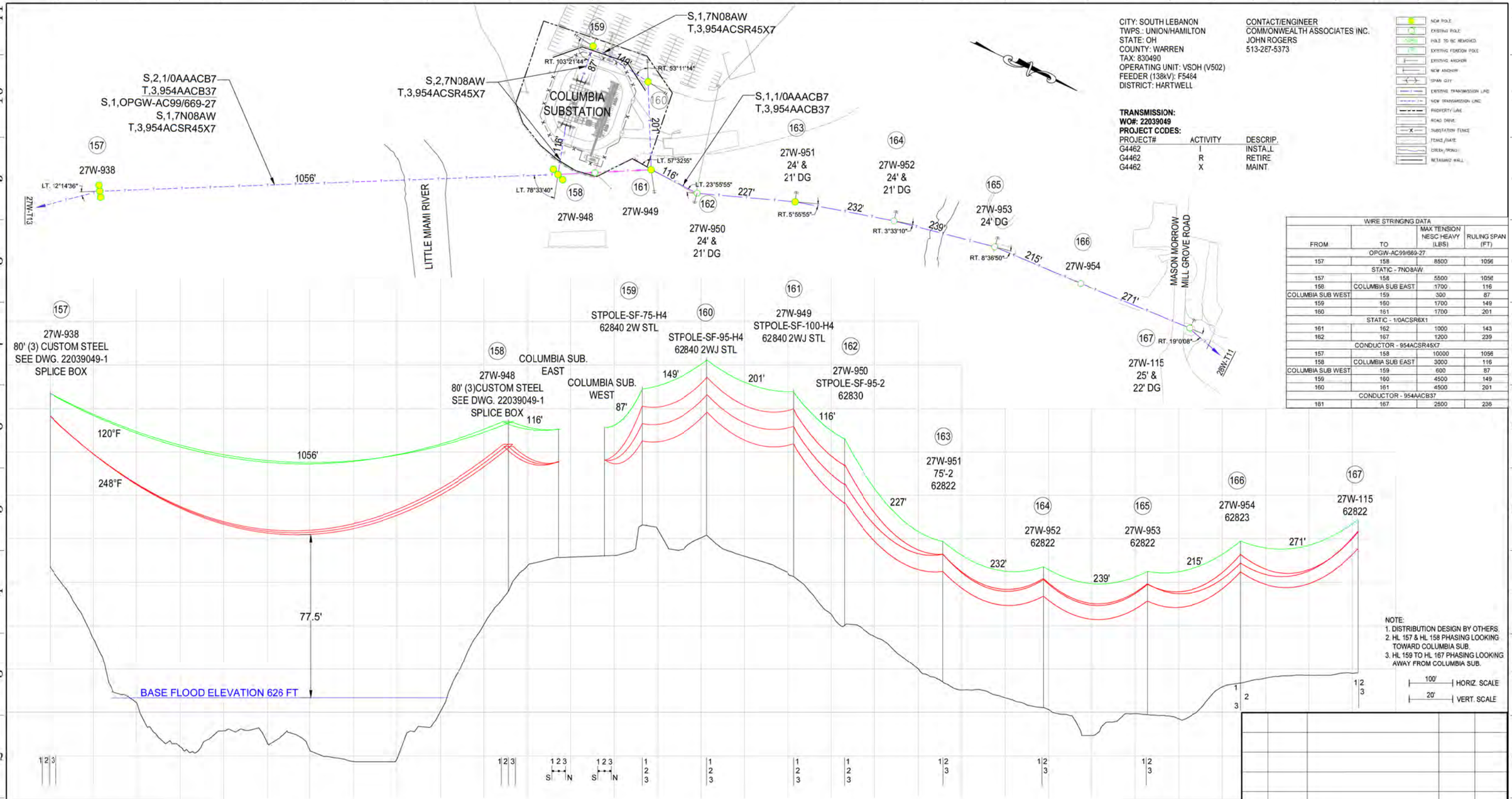

CITY: SOUTH LEBANON
TWPS.: UNION/HAMILTON
STATE: OH
COUNTY: WARREN
TAX: 830490
OPERATING UNIT: VSOH (V502)
FEEDER (138kV): F5484
DISTRICT: HARTWELL

CONTACT/ENGINEER
COMMONWEALTH ASSOCIATES INC.
JOHN ROGERS
513-287-5373

TRANSMISSION:
WO#: 22039049
PROJECT CODES:

PROJECT#	ACTIVITY	DESCRIP.
G4462	I	INSTA.L
G4462	R	RETIRE
G4462	X	MAINT.

NEW POLE
EXISTING POLE
POLE TO BE REMOVED
EXISTING FOREIGN POLE
EXISTING ANCHOR
NEW ANCHOR
SPAN GUY
EXISTING TRANSMISSION LINE
NEW TRANSMISSION LINE
PROPERTY LINE
ROAD DRIVE
SUBSTATION FENCE
FENCE/GATE
CREEK/POND
RETAINING WALL

WIRE STRINGING DATA			
FROM	TO	MAX TENSION NESC HEAVY (LBS)	RULING SPAN (FT)
OPGW-AC99/669-27			
157	158	8500	1056
STATIC - 7N08AW			
157	158	5500	1056
158	COLUMBIA SUB EAST	1700	116
COLUMBIA SUB WEST	159	300	87
159	160	1700	149
160	161	1700	201
STATIC - 1/0ACSR6X1			
161	162	1000	143
162	167	1200	239
CONDUCTOR - 954ACSR45X7			
157	158	10000	1056
158	COLUMBIA SUB EAST	3000	116
COLUMBIA SUB WEST	159	600	87
159	160	4500	149
160	161	4500	201
CONDUCTOR - 954AACB37			
161	167	2500	236

NOTE:
1. DISTRIBUTION DESIGN BY OTHERS.
2. HL 157 & HL 158 PHASING LOOKING TOWARD COLUMBIA SUB.
3. HL 159 TO HL 167 PHASING LOOKING AWAY FROM COLUMBIA SUB.

100' HORIZ. SCALE
20' VERT. SCALE

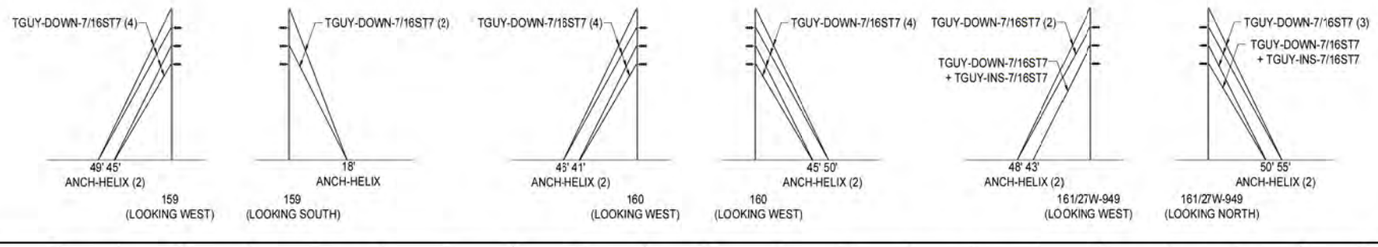

NO.	DATE	REVISION	DRFT.	ENGR.

DUKE ENERGY.

INDEX: F5484
DESCRIPTION: 138,000V.
F5484 INSTALL LOOP FEED TO COLUMBIA SUBSTATION

DATE: 11/03/17
LOCATION: WARREN COUNTY, OHIO
DRAWN: JAM (CAI)
ENGINEER: JTL (CAI)

FOR CONSTRUCTION
02/23/18

TRANSMISSION LINE ENGINEERING
CKD:
PAGE:
SCALE: H: 1"=100' V: 1"=20'
DWG NO: 27W-T14

BR

MAR. 09, 2007 AM S.S.

5484

POLE	PHASE	CONDUCTORS	STATIC
LOOKING TOWARD FOSTER STATION	1 2 3	3" 954 KCMIL AA	1 "1/0 AAAC
LOOKING AWAY FROM FOSTER STATION			
1-8	3 2 1	3" 954 KCMIL AA	1 "1/0 AAAC
9-75	3 1 2		
LOOP THRU MAINEVILLE STATION No.169			
75A	3 2 1	3" 954 KCMIL AA	1 "1/0 AAAC
FACING NORTH MAINVILLE STATION S. SIDE	1 2 3	"	"
FACING NORTH AWAY FROM MAINVILLE STATION N. SIDE	1 2 3	"	"
FACING AWAY FROM MAINEVILLE STA. No.169			
501	3 2 1	"	"
500	3 1 2	"	"
77	3 2 1	"	"
78-120	3 1 2	"	"
121	3 2 1	"	"
122	3 2 1 F 8 5 6 1	"	"
123	3 2 1 F 8 5 6 1	"	"
124-126	3 2 1 F 8 5 6 1	"	"
127	3 1 2 F 8 5 6 1	"	"
128-144	3 1 2	"	"
145	3 1 2	"	"
146-146A	3 2 1	"	"
147-148	3 2 1	"	"
149-150	3 1 2	"	"
151	3 1 2	"	"
152	3 2 1	"	"
153-155	3 1 2	"	"
156	3 2 1	"	"

POLE	PHASE	CONDUCTORS	STATIC
157-158	O S 1 2 3	3 - 954 KCMIL ACSR	O - OPGW-AC99/669-27 S - 7NO8AW
LOOP THRU COLUMBIA			
FACING WEST TOWARD COLUMBIA SUBSTATION	1 2 3	"	2 - 7NO8AW
FACING WEST AWAY COLUMBIA SUBSTATION	1 2 3	"	"
FACING AWAY FROM COLUMBIA			
159-16	1 2	"	1 - 7NO8AW
160	1 2 3	"	"
161-162	1 2 3	"	"
163-165	1 2 3	"	"
166	1 3 2	"	"
167	1 2 3	"	"
168-180	1 3 2	"	"
181-182	3 1 2	"	"
183-218	1 3 2	"	"
219	1 2 3	"	"
WARREN STATION	3 2 1	"	"

CADD DRG. f5484

Attachment C

Property Owner Notification Letter

Transmission - Public Engagement
EX552 | 315 Main Street
Cincinnati, OH 45202
duke-energy.com

Jan. 10, 2018

RE: Duke Energy Reliability Enhancement Project in your area
New Substation for South Lebanon

Dear Property Owner:

Reliability is a responsibility that Duke Energy takes very seriously. To keep that commitment, we're upgrading the power transmission system in your community, a project critical to ensuring continued reliability of your area's electric service. As a neighbor to the project area in Warren County, we're writing to provide you with details of plans to build a new substation, as well as how to reach us should you have any questions.

Duke Energy plans to build a new, 138-kilovolt (kV) substation at 770 Sutton Drive in South Lebanon, Ohio. The new Columbia Substation will connect to an existing 138-kV transmission line and three 12-kV distribution lines, which will provide greater capacity and service reliability for this community, while also addressing energy demand in neighboring areas.

After clearing and grading the site this month, we expect construction of the new substation to begin immediately, with completion of the substation planned for the end of 2018. The most noticeable portion of construction involves the clearing and grading this winter. There also may be lulls during various construction phases, which include:

Concrete Work – Concrete footings and foundations that are poured shortly after the site is cleared. Expect to see large trucks with a concrete mixer in the right of way.

Steel Erection and Civil Construction – Once the concrete pad has cured, the substation steel framework – typically towers or poles – is installed. The steel supports electric control equipment and the transmission lines that connect the substation to the regional electric grid.

Equipment Testing – The new equipment is extensively tested before the substation goes into service. This is to ensure that the facility is operating reliably and safely.

Energizing and Site Restoration – Once construction and testing is completed, the substation is energized. All disturbed or exposed areas outside the substation fence line are restored with vegetation and seeding to establish ground cover and to prevent soil erosion.

Post-Construction Operation – Most substations are not staffed once they're in operation, although technicians make regular visits to monitor operation and perform routine maintenance.

The substation will be inside a securely fenced area with a gravel base. It will have a transformer to change voltage levels between high transmission voltages and the lower distribution voltages that carry energy to homes and businesses. There also will be a small

building inside the fence that houses substation controls. The substation will have directional lighting at night for safety and security.

Construction typically takes place during daylight hours. Once the substation is completed, all construction materials and debris will be removed, and the right of way will be restored as closely as possible to its original condition. No power outages are expected during construction.

For additional questions, call **888.827.5116**, or email **MWOhioTransmission@duke-energy.com**. Thank you for your cooperation as Duke Energy progressively powers the lives of our customers and the vitality of our communities.

Sincerely,

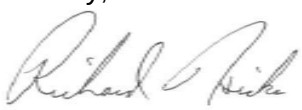

Richard Hicks
Project Manager

Enclosure: 1

State Parcel Identification Number (PIN):

Every year, the Duke Energy Foundation funds more than $2 million in charitable grants, matching gifts and volunteer grants in Ohio and Kentucky, supporting the environment, communities and K-12 education.

DUKE_ID	OWNER NAME	OWNER ADDRESS	OWNER CITY	OWNER ST	OWNER ZIP	PARCEL ID	PROPERTY ADDRESS
4	Duke Energy Ohio LLC	139 E. Fourth Street	Cincinnati	OH	45202	1201150030	770 Sutton Drive
1, 3	Lebanon Mason LLC	4020 Kinross Lakes, Ste. 200	Richfield	OH	44286	12011510020, 1201150030	W. Mason-Morrow-Millgrove Road, 1151 W Mason-Morrow-Millgrove Road
6	MMMIL Grove Road LLC	10182 International	Cincinnati	OH	45246	12013000190	W. Mason-Morrow-Millgrove Road
7	State of Ohio Dept. of Natural Resources	1952 C-4 Belcher Road	Columbus	OH	43224	12012550020	State Route 48
5, 8	State of Ohio Dept. of Natural Resources	Real Estate Division, Fountain Square	Columbus	OH	43224	12013000010, 12013000020	Mason-Morrow-Millgrove Road
2, 9	Warren County Commissioners	406 Justice Drive	Lebanon	OH	45036	12011760010, 12012550030	State Route 48

Attachment D

Cultural Resources Literature Review

Duke Energy Ohio will coordinate directly with Staff of the Ohio Power Siting Board regarding Attachment D, Cultural Resources Literature Review.

Attachment E

Stormwater Pollution Prevention Plan

Storm Water Pollution Prevention Plan

F5484 – 138kV Columbia Substation

Village of South Lebanon and Hamilton Township, Warren County, Ohio

Duke Project G4462
Cardno Project J156720M59

July 20, 2018

Prepared for: **Duke Energy**
1000 East Main Street
Plainfield, Indiana 46168

Prepared by: **Cardno**
11121 Canal Road
Cincinnati, Ohio 45241

Storm Water Pollution Prevention Plan

F5484 – 138kV Columbia Substation

Village of South Lebanon and Hamilton Township, Warren County, Ohio

July 20, 2018

Document Information

Project Site Owner	Duke Energy
Duke Energy Contact	Amanda Sheehe, Duke Energy
Project(s) Name	F5484 – 138kV Columbia Substation
Project(s) Number	Duke G4462
	Cardno J156720M59
Cardno Contact	Cori Jansing, Cardno

This plan was prepared in accordance with the Rainwater and Land Development: Ohio's Standards for Storm Water Management, Land Development and Urban Stream Protection published December 2006 by the Ohio Department of Natural Resources Division of Soil and Water Conservation and in compliance with ORC Chapter 1511, ORC Chapter 6111, and OAC Chapter 3745-38. In Ohio, responsibility for regulating storm water is held by both local and state authorities. Locally, municipalities, townships, and counties have the authority to regulate storm water. Ohio EPA administers the National Pollutant Discharge Elimination System (NPDES) program, which regulates wastewater discharges that are associated with construction and/or land disturbing activities by limiting the quantities of pollutants to be discharged and imposing monitoring requirements and other conditions.

Cardno
Shaping the Future

Certification Requirements per Ohio EPA Permit No. OHC000004 Part V.G.

Corporate Certification (Duke Energy- Owner or Owner Representative)

I certify under penalty of law that this document and all attachments were prepared under my direction or supervision in accordance with a system designed to assure that qualified personnel properly gathered and evaluated the information submitted. Based on my inquiry of the person or persons who manages the system, or those persons directly responsible for gathering the information, the information submitted is, to the best of my knowledge and belief, true, accurate, and complete. I am aware that there are significant penalties for submitting false information, including the possibility of fine and imprisonment for knowing violations.

Name _____
Title _____
Date _____

Contractor Certification (_____ Utility Line General Contractor)

I certify under penalty of law that I understand the terms and conditions of the general National Pollutant Discharge Elimination System (NPDES) permit that authorizes the storm water discharges associated with industrial activity from the construction site identified as part of this certification.

Name _____
Title _____
Date _____

Contractor Certification (_____ Erosion Control Subcontractor)

I certify under penalty of law that I understand the terms and conditions of the general National Pollutant Discharge Elimination System (NPDES) permit that authorizes the storm water discharges associated with industrial activity from the construction site identified as part of this certification.

Name _____
Title _____
Date _____

Contractor Certification (_____ Grading and Excavation Subcontractor)

I certify under penalty of law that I understand the terms and conditions of the general National Pollutant Discharge Elimination System (NPDES) permit that authorizes the storm water discharges associated with industrial activity from the construction site identified as part of this certification.

Name _____
Title _____
Date _____

TABLE OF CONTENTS

SECTION A – Basic Plan Elements 3
A1 Plan Index showing locations of required items 3
A2 11 X 17 inch plat showing building lot numbers/boundaries and roadlayout/names 3
A3 Narrative describing project nature and purpose 3
A4 Vicinity map showing project location 3
A5 Legal description of the project site 3
A6 Location of all lots and proposed site improvements 3
A7 Hydrologic Unit Code (HUC) 4
A8 Notation of any State or Federal water quality permits 4
A9 Specific points where storm water discharge will leave the site 4
A10 Location and names of all wetlands, lakes, and watercourses on and adjacent to the site 4
A11 Identification of all receiving waters 4
A12 Identification of potential discharges to groundwater 4
A13 100 year floodplains, floodways, and floodway fringes 4
A14 Pre-construction and post-construction estimate of peak discharge 4
A15 Adjacent land use, including upstream watershed 4
A16 Locations and approximate boundaries of all disturbed areas 4
A17 Identification of existing vegetative cover 5
A18 Soils map including descriptions and limitations 5
A19 Locations, size, and dimensions of proposed storm water systems 5
A20 Plan for any off-site construction activities associated with this project 5
A21 Locations of proposed soil stockpiles, borrow and/or disposal areas 5
A22 Existing site topography at an interval appropriate to show detailed drainage patterns 5
A23 Proposed final topography at an interval appropriate to show detailed drainage patterns 5

SECTION B – Active Construction Component 6
B1 Description of potential pollutant sources associated with the construction activities 6
B2 Sequence describing storm water quality measure implementation relative to land disturbing activities 6
B3 Stable construction entrance locations and specifications 7
B4 Sediment control measures for sheet flow areas 8
B5 Sediment control measures for concentrated flow areas 8
B6 Storm sewer inlet protection measure locations and specifications 8
B7 Runoff control measures 8
B8 Storm water outlet protection specifications 8
B9 Grade stabilization structure locations and specifications 8
B10 Location, dimensions, specifications and construction details of each storm water quality measure 8
B11 Temporary surface stabilization methods appropriate for each season 8
B12 Permanent surface stabilization specifications 9
B13 Material handling and spill prevention plan 10
B14 Monitoring and maintenance guidelines for each proposed pollution preventionmeasure 11
B15 Erosion & sediment control specifications for individual building lots 11

SECTION C – Post Construction Component 12
C1 Description of pollutants and their sources associated with the proposed land use 12
C2 Sequence describing storm water quality measure implementation 12

C3 Description of proposed post construction storm water quality measures 12
C4 Location, dimensions, specifications and construction details of each storm water quality measure 12
C5 Description of maintenance guidelines for proposed post construction water quality measures 12

Appendices

Appendix A Figures
Appendix B Storm Water Pollution Prevention Plan Typical Details
Appendix C Storm Water Evaluation Form for Construction
Appendix D SWPPP Amendment Log
Appendix E Local Reviewing Agency Approval
Appendix F Notice of Termination (replace when filed)

Figures

Figure 1 Project Vicinity
Figure 2 Project Area Watersheds (14-Digit HUC)
Figure 3 Soils Classification
Figure 4 Environmental Access and Erosion Control Plan
Figure 5 Environmental Access Road Map

Acronyms

SWPPP Storm Water Pollution Prevention Plan
NOI Notice of Intent
NOT Notice of Termination
NWP Nationwide Permit
OEPA Ohio Environmental Protection Agency
USACE United States Army Corps of Engineers

SECTION A – Basic Plan Elements

A1 Plan Index showing locations of required items

See Table of Contents

A2 11 X 17 inch plat showing building lot numbers/boundaries and road layout/names

Please refer to Appendix A, Figure 4, Environmental Access and Erosion Control Plan.

A3 Narrative describing project nature and purpose

The project involves the expansion of existing transmission line by approximately 550 LF and the removal/replacment of approximately 0.4 miles of existing transmission line within existing 100-foot wide right-of-way (ROW). The F5484 – 138kV Columbia Substation project initiates at Duke Energy Structure 163 (39.3709, -84.2266) located north of the Little Miami River (Stream 2), south of Mason Morrow Millgrove Road (CR 38), and west of State Route 48 and terminates at Duke Energy Structure 155 (39.3658, -84.2236) located south of the Little Miami River, north of Dwire Road (CR 149), west of State Route 48, and east of Water Stone Lane. A field investigation of the corridor was conducted on July 5, 2018.

The F5484 - 138kV Columbia Substation Project is necessary in order to facilitate the construction of the new Duke Energy Columbia Substation as well as maintain the integrity of existing Duke structures and ensure adequate power supplies to current and future utility customers in the area. The project is also needed to ensure safety within the existing easements and remain in compliance with current transmission line standards. The transmission line route consists of an existing transmission line corridor and new Duke Energy easement.

Construction will be accomplished largely through the use of bucket trucks with truck-mounted augers for structure installation and other construction vehicles transporting cable spools to install the transmission cable along the route. Excavation will be restricted to the locations where the installation of new structures will occur. Earth moving activities are anticipated to be minimal, if any. The extent of access disturbance can vary widely dependent upon many factors, including density and type of surface, vegetative cover, weather conditions, and the type of vehicles moving over the area. The existing vegetation will be preserved to the maximum extent practicable.

Project construction is expected to begin in Fall 2018.

A4 Vicinity map showing project location

Please refer to Appendix A, Figure 1, Project Vicinity map, which provides a simplified layout of Project activities and adjacent land features and information.

A5 Legal description of the project site

The Project crosses one section:

Lebanon and South Lebanon, Ohio Quad

Section 1, Township 4E, Range 3N, Civil Township: Village of South Lebanon

A6 Location of all lots and proposed site improvements

The proposed project is linear in scope and will take place within established and newly established transmission line ROW. Only approved areas beyond the ROW will be used for equipment storage, temporary access routing, and laydown areas. Where feasible, construction activities at structure locations will be performed from roadways to minimize soil disturbance. Maps of the project site including structure locations, parcel boundaries, and water resources can be found in Appendix A, Figure 4, Environmental Access and Erosion Control Plan.

A7 Hydrologic Unit Code (HUC)

The project lies within the boundaries of the following 14-Digit USGS Hydrologic Unit Code watersheds:

Turtle Creek Watershed – (HUC 05090202-060-030)
Little Miami River below Turtle Creek Watershed – (HUC 05090202-090-020)
Little Miami River below Todd Fork to above Turtle Creek Watershed – (HUC 05090202-060-020).

A8 Notation of any State or Federal water quality permits

There are no proposed impacts to regulated waters which would require a permit from either the U.S. Army Corps of Engineers (USACE) or the Ohio Environmental Protection Agency (OEPA). The Notice of Intent (NOI) for storm water discharges will be submitted contingent on the local reviewing agency approval(s).

A9 Specific points where storm water discharge will leave the site

All discharges are planned to consist solely of storm water runoff through sheet flow leading to existing water courses. There are no planned non-storm water discharges associated with the proposed project.

A10 Location and names of all wetlands, lakes, and watercourses on and adjacent to the site

Wetlands, watercourses, and other waters have been delineated with respect to pole placement. These locations are shown in Appendix A, Figure 4, Environmental Access and Erosion Control Plan. The National Wetland Inventory (NWI) mapped wetlands are shown in Appendix A, Figure 4, Project Vicinity.

A11 Identification of all receiving waters

The storm water runoff from the project will ultimately discharge into the Ohio River via the Little Miami River, and unnamed tributaries to the Little Miami River.

A12 Identification of potential discharges to groundwater

The proposed site does not contain any known sinkholes, active or abandoned wells, or any other direct groundwater recharge points. Any recharging of the groundwater supply by water from the proposed site will be by natural means of infiltration through the soil.

A13 100 year floodplains, floodways, and floodway fringes

No structures associated with the F5484 – 138kV Columbia Substation are located within FEMA-defined floodplains. See Appendix A, Figures 4.01 to 4.06, for the location of floodplains. Although portions of the project Study Area are located within the FEMA-defined Floodways, it has been determined that the transmission line impacts do not require a floodplain permit through coordination with Chuck Petty and the Warren County Engineer's Office (Appendix E).

A14 Pre-construction and post-construction estimate of peak discharge

Based on the nature of this project, there will be no impounded storm water. There is no anticipated significant change in peak discharge from this project site between pre-construction and post-construction site conditions or new or impervious surfaces.

A15 Adjacent land use, including upstream watershed

Adjacent land use consists of a mix between urban/industrial, secondary growth forest, and maintained right-of-way (ROW).

A16 Locations and approximate boundaries of all disturbed areas

The majority of ground disturbance will occur within off-road sections of construction vehicle access routes and the structure installation locations. The expected disturbance for this project is conservatively estimated at 2.2 acres (based on a 20-foot wide vehicular path for 0.79 miles of proposed off-road construction access routes).

A17 Identification of existing vegetative cover

The existing vegetative cover is a mixture of maintained ROW, and secondary growth forest within the existing transmission line ROW.

A18 Soils map including descriptions and limitations

According to the NRCS Soil Survey Geodatabase data collected for Warren County, ten (10) mapped soil units are present within the Study Area. Two (2) of these soils (Cincinnati silt loam, 6 to 12 percent slopes and Genesee loam) are listed as hydric. See Appendix A, Figure 3, Soils Classifications for soil types and hydric classification by line segment.

A19 Locations, size, and dimensions of proposed storm water systems

There is no proposed construction of any permanent storm water systems.

A20 Plan for any off-site construction activities associated with this project

No off-site construction activities are planned for this project.

Any temporary staging and laydown areas for both new and used structures and other equipment will be identified near the time of construction. Typically, Duke Energy substations are utilized for storage, and used structures are taken off-site. Storm water protection will be integrated as necessary at laydown areas and amended into the plan and routine inspections by the Construction Supervisor.

A21 Locations of proposed soil stockpiles, borrow and/or disposal areas

It is anticipated that no soil fill will be brought in. However, gravel backfill will be used at structure locations. Where wetland or stream impacts may occur, spoils management protocol will be followed during structure installation. Where appropriate, any excavated soil, gravel backfill, or other construction material will be stored on construction matting within a wetland area and erosion control measures will be implemented. Excess soil from boring or auguring operations will be permanently relocated to an upland location away from surface drainage ways and wetland areas adjacent to structure replacement locations.

A22 Existing site topography at an interval appropriate to show detailed drainage patterns

Given the project corridor runs through variable terrain, the existing drainage patterns are best depicted and evaluated with 2 foot contours shown in Appendix A, Figure 4, Environmental Access and Erosion Control Plan.

A23 Proposed final topography at an interval appropriate to show detailed drainage patterns

Final post-construction contours will match pre-construction condition to the extent practicable. The construction scope is limited to the replacement and construction of new utility structures and overhead facilities.

SECTION B – Active Construction Component

B1 Description of potential pollutant sources associated with the construction activities

The anticipated pollutants to be generated by this type of construction include the following:

- Sediment carried off-site by storm water runoff
- Vegetation debris generated during onsite vegetation removal
- Concrete washout and dewatering operations for projects with foundations
- Domestic garbage from construction workers
- Potential for petroleum spills from heavy equipment operation and refueling

Clearing and/or maintenance trimming will involve mowing and limb cutting with standard forestry equipment and hand cutting where required. In instances where tree or large limbs are removed entirely for access or maintenance they will be cut into appropriate lengths for use by the landowner, or otherwise chipped within the ROW. Digging, grubbing, and any other disturbance will be restricted to locations where the installation of new structures will occur. All excavated materials will be distributed in approved upland locations away from surface drainage ways. Wood chippings and other low-height vegetation will be distributed within the ROW to the maximum extent possible to assist in soil stabilization and sediment runoff control.

Any and all domestic garbage generated onsite such as disposable food and drink containers and other items shall be either carried off-site and properly disposed or deposited into a construction dumpster provided onsite. The project site shall be monitored on a daily basis for the proper disposal of such waste.

The erosion of exposed soils by storm water runoff shall be controlled through the installation of best management practices (BMPs) such as silt fence, fiber rolls, or similar barriers, followed by seeding and mulching. All such practices shall be installed and maintained in accordance with Appendix B, Storm Water Pollution Prevention Plan Typical Details.

Equipment cleaning will be limited to water washing in sediment and erosion controlled areas as required to insure reliable equipment operations while preventing the tracking of excessive dirt and mud from the project site. Soil materials that may need to be removed from the Project ROW will be taken to an upland area or other designated disposal area.

Concrete washout will be completed on projects with foundations at designated concrete washout stations for containment of this waste in accordance with Appendix B, Storm Water Pollution Prevention Plan Typical Details. Any dewatering associated with the excavation for the placement foundations will be conducted through an approved dewatering bag or other upland means of filtering dewatering point discharges.

B2 Sequence describing storm water quality measure implementation relative to land disturbing activities

Due to the nature of the Project, multiple construction stages may take place simultaneously within the Project area. Below is the general sequence of construction activities and storm water quality measures implementation:

The general sequence of construction activities includes the following:

1) Installation of temporary construction entrances
2) Installation of temporary erosion and sediment control measures
3) Construction equipment access
4) Removal of existing poles and conductors
5) Installation of new poles and conductors

6) Final restoration (final grading, seeding, and stabilization)
7) Removal of temporary erosion and sediment control measures
8) Removal of temporary construction entrances

The storm water pollution prevention measures described within this SWPPP will be installed and inspected before soil disturbing activities commence. Structural erosion controls may also need to be installed along equipment access routes dependent upon site condition. These needs will be assessed as the project progresses. Any erosion controls that need to be moved for equipment transfers will be restored, to the extent practical, before significant rainfalls occur. All storm water quality control measures shall be inspected regularly. At the completion of the project all disturbed areas will be stabilized with vegetation and straw mulch. All measures will be in accordance with guidelines provided in the *Rainwater and Land Development* and this Plan.

As conditions may vary from pre-project condition during construction, sediment control measures may be altered and additional locations for such measures may be needed depending upon changing field conditions. Additional measures may be required and implemented as they become warranted and should be documented in Appendix D, SWPPP Amendment Log. SWPPP revisions or altercations require review and/or approval by a trained individual experienced in the principles of storm water, erosion and sediment control, treatment, and monitoring for Duke Energy Projects.

Recognizing the increased potential for erosion special care will be taken to seed and mulch construction travel ways in highly erodible or steep slope areas. Additional measures such as water bars, erosion matting, or other appropriate measures may be employed as necessary to protect the land surface from erosion until termination of the permit is verified and the Notice of Termination (NOT) is filed with OEPA (Blank copy of NOT is provided in Appendix F).

Stabilized construction entrances or other means of limiting the tracking of sediment and debris off-site will be used at roadway intersections whenever possible. All debris or sediment tracked onto road ways will be removed at the end of the day to the maximum extent possible. Large equipment movement to each structure associated with, but not limited to, disassembly, framing, and clipping-in of line will be limited to the maximum extent possible to further reduce ground disturbance.

Temporary or permanent seeding stabilization will adhere to specifications in Subsections B11 and B12. Vegetated areas with a density of less than seventy percent (70%) shall be re-stabilized using appropriate methods to minimize the erosion potential. No structural erosion controls will be removed until construction has permanently stopped and reseeding and mulching has occurred. After the entire project is complete and vegetated coverage is at least 70% any accumulated sediment, fiber rolls, silt fence, or other specified erosion and sediment control measures will be removed.

Wherever equipment crossing drainage ways in steeply sloping areas will result in soil disturbances a combination of temporary timber matting bridges and water bars to divert runoff to the installed sediment controls or vegetative filter areas will help reduce impacts from concentrated flows to receiving streams.

B3 Stable construction entrance locations and specifications

Stabilized construction entrances will be installed when warranted based on project duration or varying site conditions impacted by wet weather patterns. Special consideration shall be given for installation of a stable construction entrance in the event of wet weather or high ingress and egress traffic. Stable construction entrances and other means of limiting the tracking of sediment and debris off-site will be used. Additional construction entrances, other than the ones indicated in the Plans, may be required and implemented as they become warranted based on variable site conditions. All debris or sediment tracked onto roadways will be removed at the end of the day to the maximum extent possible. The existing construction entrances will be evaluated and modified to be in accordance with *Rainwater and Land Development* and this Plan as deemed necessary.

B4 Sediment control measures for sheet flow areas

Runoff and sediment control practices will include a combination of fiber roll (or other plant fiber-based barrier) and/or silt fencing. These sedimentation and erosion control measures will be located at specific locations along the construction route to prevent sediment runoff into streams, wetlands, and other open waters. The placement and use of erosion control structures indicated in Appendix A, Figure 4, Environmental Access and Erosion Control Plan will be installed in accordance with Appendix B, SWPPP Typical Details and be in compliance with the *Rainwater and Land Development* manual. If required, additional appropriate structural controls will be implemented as the Project progresses. Plan changes require approval of Duke Energy.

B5 Sediment control measures for concentrated flow areas

No areas of concentrated flow are expected for this project. If conditions dictate fiber roll or rock check dams will be used, as appropriate, within the ephemeral drainages along the route to limit sedimentation within the drainage and off-site. At locations where equipment crosses drainage ways in steeply-sloping areas, which could result in soil disturbance, a combination of temporary timber matting bridges and water bars to divert runoff to sediment controls or vegetative filter areas can help reduce impacts from concentrated flows to receiving streams.

B6 Storm sewer inlet protection measure locations and specifications

Where applicable, BMPs (fiber rolls or other catch basin protection) will be installed to prevent erosion from storm water runoff from areas of construction to enter directly into the storm sewer.

B7 Runoff control measures

Water bars can be used to prevent runoff flows from occurring in wheel rutting on steep slopes which will impact receiving streams.

B8 Storm water outlet protection specifications

Not applicable for this project.

B9 Grade stabilization structure locations and specifications

Not applicable for this project.

B10 Location, dimensions, specifications and construction details of each storm water quality measure

The locations of the sediment control structures are indicated in Appendix A, Figure 4, Environmental Access and Erosion Control Plan. The general specifications for each practice are located in Appendix B, SWPPP Typical Details. As construction progresses Duke Energy will consider modification to or addition of erosion control structures depending on changing site conditions with respect to slope and proximity to adjacent water bodies.

B11 Temporary surface stabilization methods appropriate for each season

In the event temporary stabilization is required (when construction activity has ceased but will resume in fourteen (14) days or more), either seeding or mulch application or other stabilization measure will be implemented within seven (7) days of the most recent disturbance. Areas within 50 feet of a stream (including intermittent streams) will be stabilized within 2 days of the most recent disturbance. Mulch alone is acceptable temporary cover and may be use in lieu of temporary seeding, provided that it is appropriately anchored. A high potential for fertilizer, seed, and mulch to wash exists on steep banks, cuts, and in channels and areas of concentrated flow.

Table 1. Temporary Seed Mixture

Species	Application Rate
Annual Ryegrass	40 lbs./acre
Oats	128 lbs./acre
Tall Fescue	40 lbs./acre

Straw mulch should be used at a rate of 2 tons/acre or 90 lbs./1,000 sq. ft. for seed protection and additional erosion control. It should be spread by hand or machine and be crimped or anchored, as appropriate. If slopes necessitate the use of a mulch cover, then erosion control blanketing shall be substituted. No hay should be used as it may introduce invasive non-native species to adjacent undisturbed habitats (such as hardwood forests or wetland areas).

B12 Permanent surface stabilization specifications

Areas within fifty (50) feet of a stream will require permanent surface stabilization within two (2) days of the last disturbance. Stream bank and riparian floodplain areas shall be mulched and seeded with the Stream Bank and Riparian Areas Restoration Seed Mix as recommended by Ohio DNR staff as follows.

Table 2. Stream Bank and Riparian Areas Restoration Seed Mix

Grass and Sedge Species	Application Rate
Andropogon gerardii (Big Bluestem)	24 oz./acre
Bouteloua curtipendula (Sideoats Grama)	1 oz./acre
Carex bicknellii (Prairie Oval Sedge)	2 oz./acre
Elymus canadensis (Canada Wild Rye)	2 oz./acre
Dactylis glomerata (Orchard grass)	24 oz./acre
Panicum virgatum, Switchgrass)	4 oz./acre
Schizachyrium scoparium (Little Bluestem)	3 oz./acre
Sorgastrum nutans (Indian Grass)	0.5 oz./acre
Cover Crop Species	Application Rate
Avena sativa (Seed Oats)	800 oz./acre
Lolium multiflorum (Annual Ryegrass)	160 oz./acre

All other areas of soil disturbance will be seeded and mulched for permanent surface stabilization within seven (7) days in areas where construction has ceased and the site is at final grade or will lay dormant for more than one (1) year. Any permanent seeding should consist of a seed mixture appropriate for the area that has been disturbed and conducted during the season appropriate for its installation.

Non-agricultural areas including access and other vegetated ROW areas shall be permanently mulched and seeded with a general use permanent seed mix consisting of the following:

Table 3. General Use Permanent Seed Mixture

Species	Application Rate
Kentucky Bluegrass	20-40 lb/acre
Perennial Ryegrass	10-20 lb/acre
Creeping Red Fescue	20-40 lb/acre

Site Preparations for installing both seed mixes are as follows:

Site Preparation: Use appropriate equipment to level disturbed areas and return to original grades focusing on reinforcing positive drainage. Avoid compaction during construction by placing equipment on mats to access wet or saturated areas. Soil amendments are acceptable in non-native seeding areas.

Seed Preparation: Thoroughly mix the seed prior to planting as many of the heavier seeds may have settled during shipping. The seed mix will contain a temporary cover of Common Spring Oat and Annual Ryegrass to accelerate re-vegetation.

Planting: Seed will be worked into the soil no greater than a ¼ inch in depth. For smaller areas a hand broadcaster and rake can be used. For larger areas the seed can be installed mechanically with a seed box no-till drill (Truax™ Trillion Broadcast Seeder or equivalent). Areas that are too wet for mechanical seeding will be installed via the hand broadcasting method.

Mulching: Straw mulch should be used at a rate of 2 tons/acre for all natural areas, non-maintained areas, for seed protection and additional erosion control. Swales and other areas of concentrated flow should be stabilized with erosion control blanketing.

B13 Material handling and spill prevention plan

Unlikely incidents involving spills or releases of other non-sediment pollutants are expected to be limited to small quantities of petroleum products from construction vehicles, including but not limited to motor oil, transmission fluids, and hydraulic oils. Spill clean-up kits and personnel trained in their use will be at each construction location. No vehicle maintenance activities that could result in storm water contamination (oil changes or engine repairs) will be permitted outside of stabilized construction areas. Appropriate spill control measures (oil absorbent pads or booms) must be in place before maintenance activities occur.

Spills of any amount of petroleum product or polluting materials are to be prevented. The following list details general requirements necessary to avoid spills and minimize the impact of accidental spills:

- No bulk quantities of diesel fuel and gasoline will be stored on the site. No bulk quantities of hazardous materials including solvents and lubricants will be stored on the site.
- Vehicles and equipment are expected to be re-fueled off-site. Fuel carriers (if applicable) and transported equipment will be inspected on a daily basis for leaks prior to entering the site and will not be allowed on site until leaks are repaired.
- The equipment staging area will be located away from surface waters and any private and municipal water wells.
- All construction equipment will be inspected daily for leaks prior to start of work. Any leaking equipment will be repaired, as necessary.
- If any soil is contaminated with hydrocarbons or other objectionable material, it will be segregated and properly disposed of off-site.
- If concrete materials are used on-site, concrete washouts should be used. No washout of concrete materials should occur within wetland areas or other drainage ways.

Project related solid wastes will be collected regularly and transferred to a licensed solid waste disposal site. No construction waste materials will be buried onsite. Portable sanitary waste units will be utilized and available for the project. A licensed sanitary waste management contractor will collect sanitary waste from the portable units as necessary. It will be the responsibility of the Construction Supervisor to ensure that all construction personnel are instructed regarding the correct procedure for waste disposal and that these practices are followed.

Contractors shall provide all necessary labor, materials, equipment, and response capabilities to prevent oil releases. Contractors causing an oil release must take appropriate actions to minimize the environmental impacts of the release.

If a hazardous substance release or oil spill requiring attention shall occur during construction, the responsible party shall immediately contact the Duke Energy Construction Supervisor, who will then contact Duke Energy Health and Safety or Environmental Services to report the spill as necessary and ensure that the spill is cleaned up properly by the responsible party or an approved remediation contractor.

In an emergency, immediately report all spills to the appropriate Duke Energy Coordinator. All spill notifications shall follow Duke Energy procedures.

Duke Energy Spill Hotline 1-800-527-3853

B14 Monitoring and maintenance guidelines for each proposed pollution prevention measure

To maintain the storm water management system in effective operating condition, erosion and sedimentation control structures will be inspected daily if construction personnel are actively working in the area. In addition, each installed erosion and sedimentation control structure, and areas contributing to storm water discharges at the locations of these structures, will also be regularly inspected at least weekly and again after each rainfall/precipitation event exceeding ½ inch in 24 hours by qualified personnel under the direction of Duke Energy.

Any damage or deficiency noted during routine or regular inspections will be recorded on a Storm Water Evaluation Form for Construction (Appendix C) and corrected as directed by the Construction Supervisor. The written inspection records will be kept on file and will include notes on any corrective actions taken. If requested, these records will be made available for review by the 'inspecting authority within 48 hours' per OAC Chapter 3745-38 (NPDES). Inspection records will be kept onsite with the SWPPP to the greatest extent possible.

Any deficiencies will be corrected by repair of damaged or deteriorated controls or by modifying structural or operational practices to achieve the desired results. If needed, the SWPPP shall be revised following such modifications.

Maintenance of stabilization and erosion control measures will include the following:

- "Qualified Inspection Personnel" under the direction and designation of the Construction Supervisor will be responsible for inspections of the erosion controls and completion of the Storm Water Evaluation Form for Construction.
- It is the responsibility of the Construction Supervisor that all personnel selected for maintenance responsibilities are trained in repairs as necessary to keep the erosion and sedimentation controls in good working order.
- Fiber rolls, silt fence, or other specified erosion control measure will be inspected for proper installation and function to include the following: proper anchoring of all controls, depth of sediment, separation from adjacent structures, and to see that stakes are firmly in the ground. Built up sediment will be removed when it has reached one-half (1/2) the height of the control and placed in previously stabilized and upland area.
- Seeded areas shall be checked regularly for bare spots, washouts, and healthy growth to assure that a good stand of grass is being maintained. Areas that fail to establish vegetation cover will be re-seeded as soon as such areas are identified.
- Sediment tracking from temporary construction entrances onto roadways should be minimized and will be the responsibility of the Construction Supervisor. When sediment is observed on roadways it shall be removed at the end of each workday.

B15 Erosion & sediment control specifications for individual building lots

Not applicable for this project.

SECTION C – Post Construction Component

C1 Description of pollutants and their sources associated with the proposed land use

The proposed project is an existing transmission line rebuild and new transmission line extension project consisting of improvements made solely to Duke Energy transmission ROW. No post construction pollutants are expected.

C2 Sequence describing storm water quality measure implementation

Seeding and vegetation establishment are the only long-term storm water quality measures proposed for the Project. See Subsection B11 and B12 for a description of seeding implementation.

C3 Description of proposed post construction storm water quality measures

The site will be returned to its previous use and condition. Post-construction pollutant controls are addressed by establishment of permanent vegetative cover in all areas, except those that will be returned to agricultural crops. Cover crop, or nurse crop seed mix, may be used in agricultural areas that are not to be immediately cultivated.

C4 Location, dimensions, specifications and construction details of each storm water quality measure

See Subsection C3.

C5 Description of maintenance guidelines for proposed post construction water quality measures

Seeded areas will be inspected to ensure adequate vegetative establishment and coverage. Adequate coverage shall be defined as greater than or equal to 70% areal coverage by visual estimation. Reseeding, watering or fertilization shall be utilized to meet this goal. Fertilizer should not be used in areas requiring native seeding. The ROW will be maintained in accordance with easement guidelines and consist of vegetative mowing and/or woody removal. All temporary erosion and sediment control measures will be removed prior to the NOT being approved.

Routine inspections and monitoring of erosion control structures will end and structures removed, once the disturbed soil areas are permanently re-established with a vegetative cover of at least 70% or greater density (final stabilization). Final stabilization in agricultural areas is defined as returning the disturbed land to it pre-construction agricultural use.

When all construction and ground disturbance activities have ceased, final stabilization has been documented, and all temporary erosion measures are removed, if required the NOT shall be submitted to the OEPA within 45 days. The NOT shall be also submitted to any other Local agencies that required review of the Project.

Appendix A

Figures

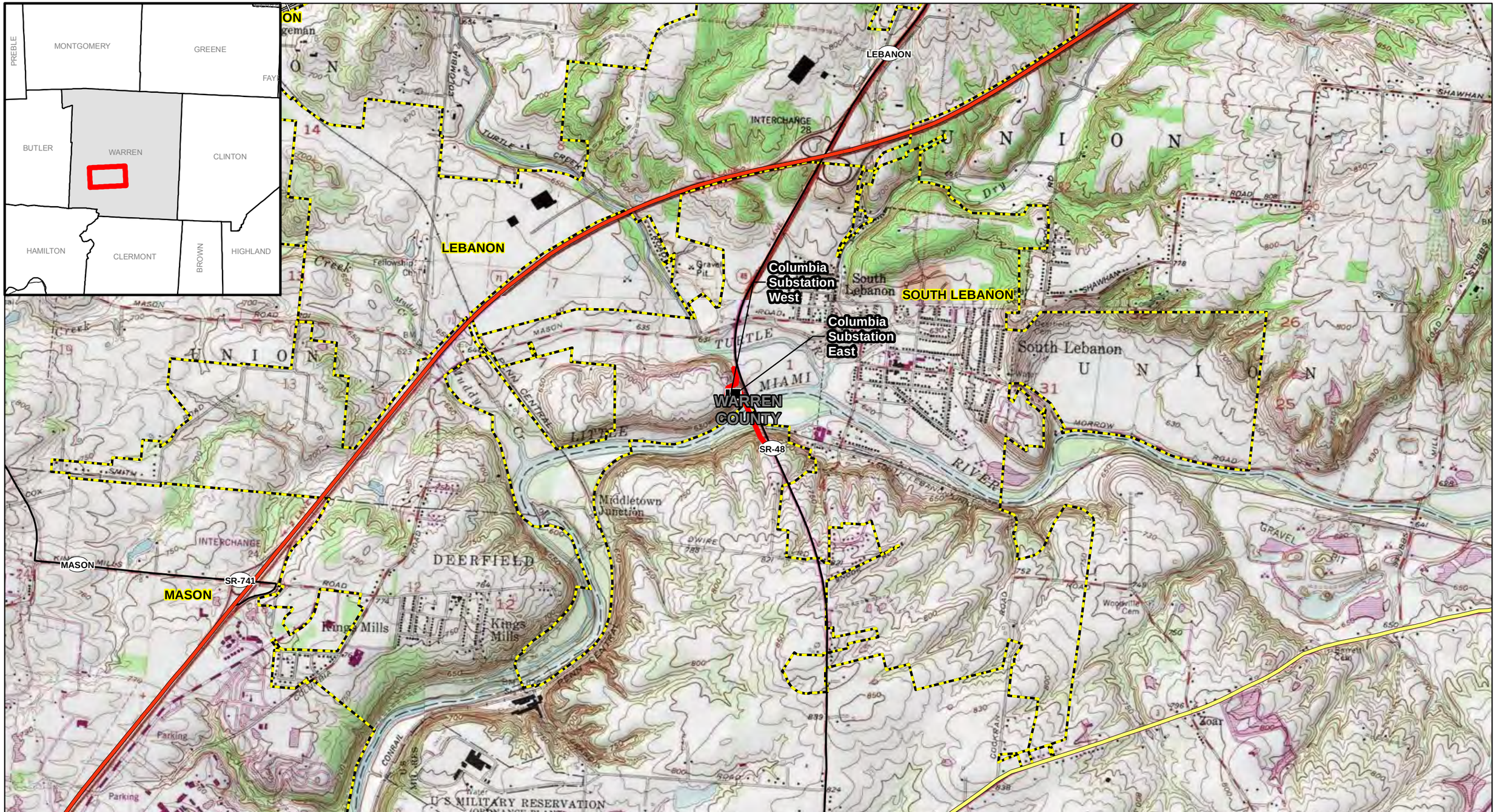

PROJECT LOCATION

WARREN COUNTY, OH

REFERENCE: USGS 7.5' TOPOGRAPHIC QUADRANGLES: LEBANON AND SOUTH LEBANON, OHIO. OBTAINED VIA ESRI USA TOPO, NATIONAL GEOGRAPHIC TOPO, AND USGS, ACCESSED 01/2017.

N

0 1,000 2,000 4,000 Feet

Project Centerline
Interstate
State Highway
US Highway
Railroad
County Boundary
Municipal Boundary
Existing Facility

DUKE ENERGY.

Cardno Shaping the Future

FIGURE 1

STORMWATER POLLUTION PREVENTION PLAN
F5484 – 138kV COLUMBIA SUBSTATION
REBUILD AND EXTENSION
DUKE ENERGY
PROJECT VICINITY MAP

DRAWN BY: COD DATE: 7/18/2018
CHECKED: CJ APPROVED: JT

R:\Projects\15\156\156720M_DukeEnergy9193\M59_SOW22_5484 138kVColumbiaSubstation\GIS\MXD\SWPPP\SWPPP_M59ColumbiaSta_1_Project_Vicinity.mxd

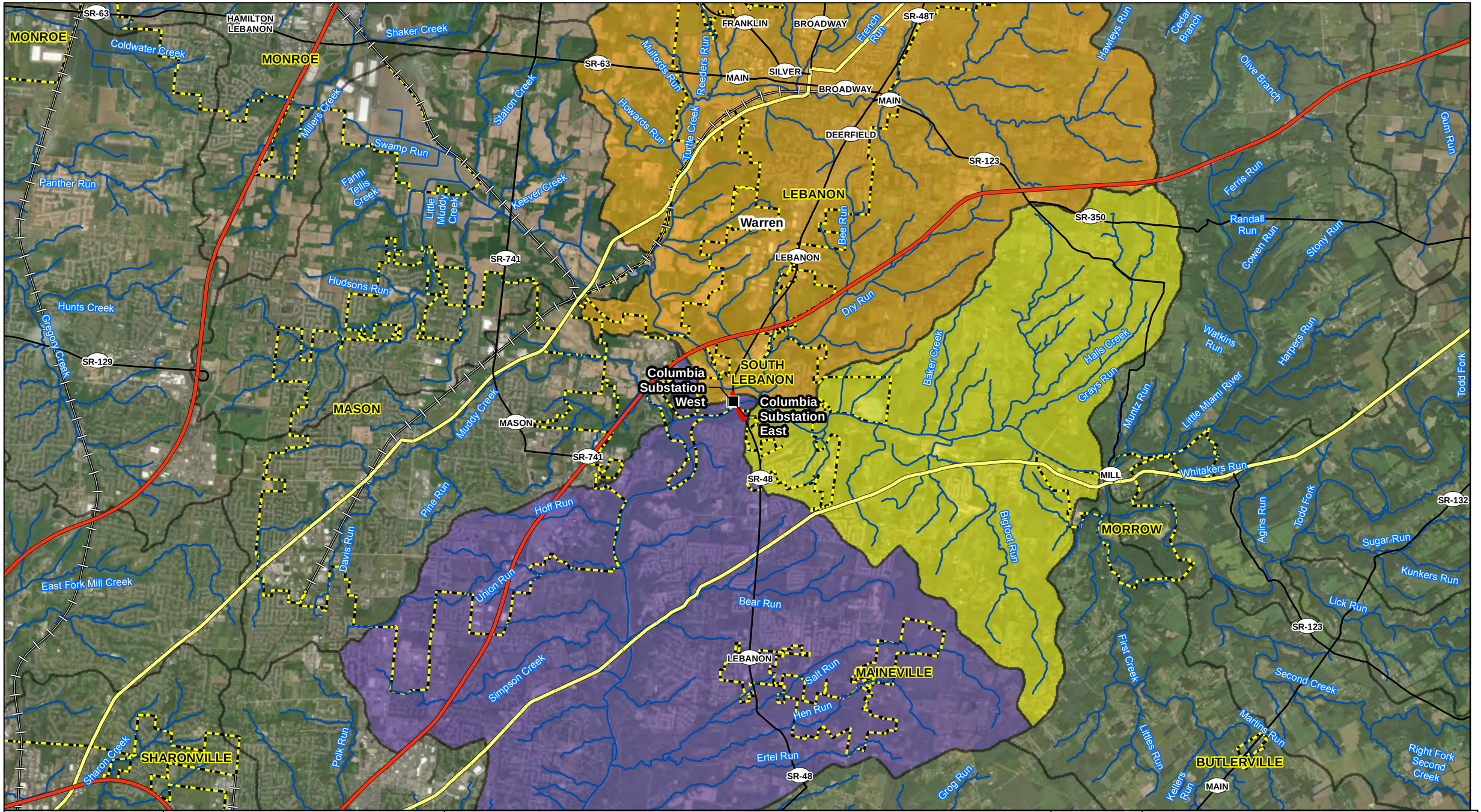

PROJECT LOCATION

WARREN COUNTY, OH

REFERENCE: USGS 7.5' TOPOGRAPHIC QUADRANGLES: LEBANON AND SOUTH LEBANON, OHIO. OBTAINED VIA ESRI USA TOPO, NATIONAL GEOGRAPHIC TOPO, AND USGS, ACCESSED 01/2017.

N

0 4,500 9,000 18,000 Feet

- Existing Facility
- Project Centerline
- Interstate
- NHD Flowline
- State Highway
- US Highway
- Railroad
- Municipal Boundary
- Adjacent Watersheds
- Little Miami R. below Todd Fk. to above Turtle Cr.
- Little Miami River below Turtle Cr. to above O'Bannon Cr. [except Muddy Cr.]
- Turtle Creek [except Little Muddy Cr.]

DUKE ENERGY

Cardno Shaping the Future

FIGURE:2

STORMWATER POLLUTION PREVENTION PLAN
F5484 – 138kV COLUMBIA SUBSTATION
REBUILD AND EXTENSION
DUKE ENERGY
PROJECT AREA WATERSHEDS

DRAWN BY: COD DATE: 7/19/2018
CHECKED: CJ APPROVED: JT

R:\Projects\15\156\156720M_DukeEnergy9193\M59_SOW22_5484 138kVColumbiaSubstation\GIS\MXD\SWPPP\SWPPP_M59ColumbiaSta_2_Watersheds.mxd

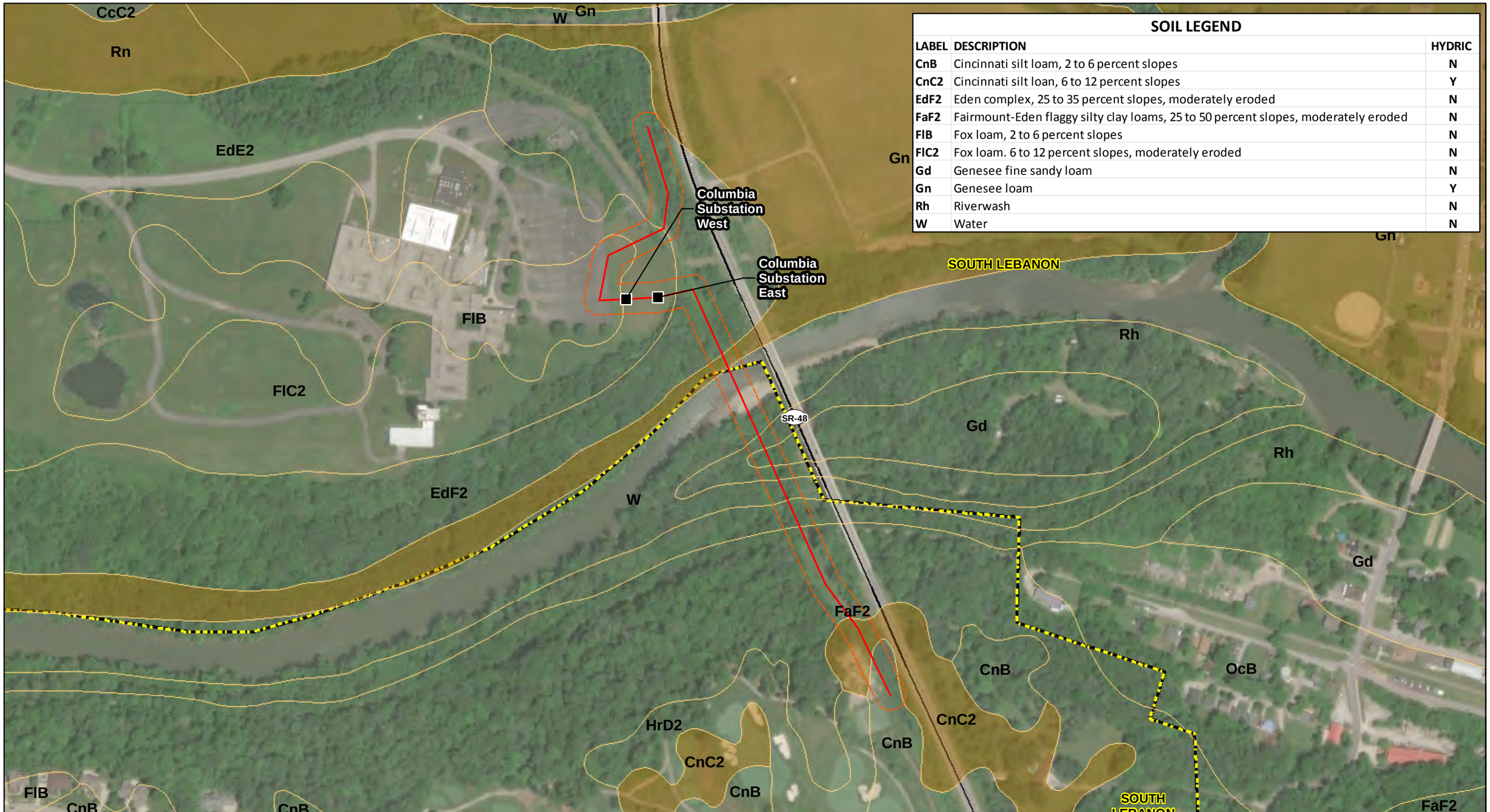

SOIL LEGEND

LABEL	DESCRIPTION	HYDRIC
CnB	Cincinnati silt loam, 2 to 6 percent slopes	N
CnC2	Cincinnati silt loan, 6 to 12 percent slopes	Y
EdF2	Eden complex, 25 to 35 percent slopes, moderately eroded	N
FaF2	Fairmount-Eden flaggy silty clay loams, 25 to 50 percent slopes, moderately eroded	N
FlB	Fox loam, 2 to 6 percent slopes	N
FlC2	Fox loam. 6 to 12 percent slopes, moderately eroded	N
Gd	Genesee fine sandy loam	N
Gn	Genesee loam	Y
Rh	Riverwash	N
W	Water	N

PROJECT LOCATION

WARREN COUNTY, OH

REFERENCE: USGS 7.5' TOPOGRAPHIC QUADRANGLES: LEBANON AND SOUTH LEBANON, OHIO. OBTAINED VIA ESRI USA TOPO, NATIONAL GEOGRAPHIC TOPO, AND USGS, ACCESSED 01/2017.

N

0 150 300 600 Feet

Existing Facility
Project Centerline
100ft Corridor
Interstate
State Highway
US Highway
Railroad
Municipal Boundary
Soil Unit
Soil Unit - Hydric

DUKE ENERGY.

Cardno Shaping the Future

FIGURE:3
STORMWATER POLLUTION PREVENTION PLAN
F5484 – 138kV COLUMBIA SUBSTATION
REBUILD AND EXTENSION
DUKE ENERGY
SOIL CLASSIFICATIONS

DRAWN BY: COD DATE: 7/18/2018
CHECKED: CJ APPROVED: JT

R:\Projects\15\156\156720M_DukeEnergy9193\M59_SOW22_5484 138kVColumbiaSubstation\GIS\MXD\SWPPP\SWPPP_M59ColumbiaSta_3_Soil_.mxd

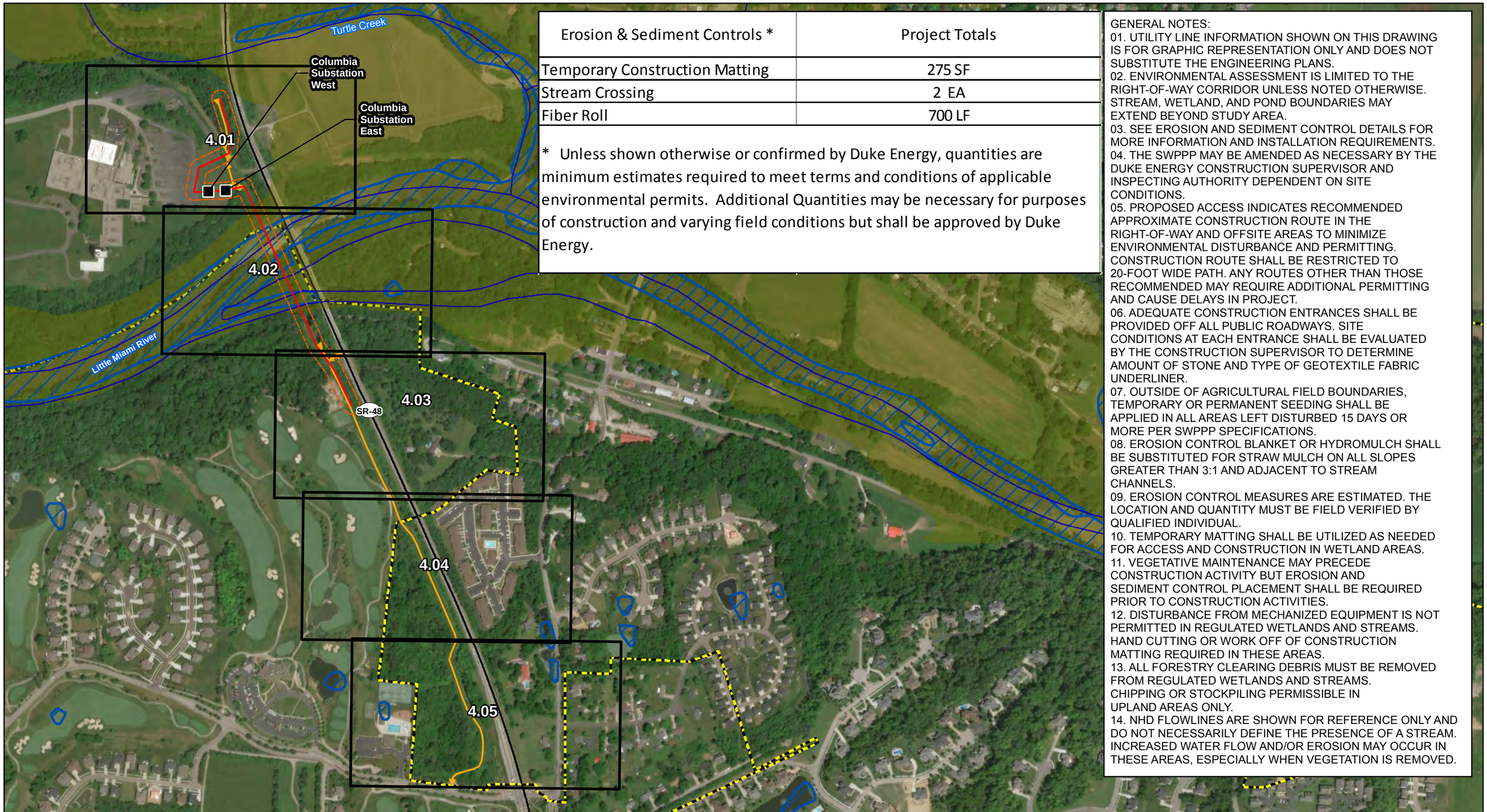

Erosion & Sediment Controls *	Project Totals
Temporary Construction Matting	275 SF
Stream Crossing	2 EA
Fiber Roll	700 LF

* Unless shown otherwise or confirmed by Duke Energy, quantities are minimum estimates required to meet terms and conditions of applicable environmental permits. Additional Quantities may be necessary for purposes of construction and varying field conditions but shall be approved by Duke Energy.

GENERAL NOTES:
01. UTILITY LINE INFORMATION SHOWN ON THIS DRAWING IS FOR GRAPHIC REPRESENTATION ONLY AND DOES NOT SUBSTITUTE THE ENGINEERING PLANS.
02. ENVIRONMENTAL ASSESSMENT IS LIMITED TO THE RIGHT-OF-WAY CORRIDOR UNLESS NOTED OTHERWISE. STREAM, WETLAND, AND POND BOUNDARIES MAY EXTEND BEYOND STUDY AREA.
03. SEE EROSION AND SEDIMENT CONTROL DETAILS FOR MORE INFORMATION AND INSTALLATION REQUIREMENTS.
04. THE SWPPP MAY BE AMENDED AS NECESSARY BY THE DUKE ENERGY CONSTRUCTION SUPERVISOR AND INSPECTING AUTHORITY DEPENDENT ON SITE CONDITIONS.
05. PROPOSED ACCESS INDICATES RECOMMENDED APPROXIMATE CONSTRUCTION ROUTE IN THE RIGHT-OF-WAY AND OFFSITE AREAS TO MINIMIZE ENVIRONMENTAL DISTURBANCE AND PERMITTING. CONSTRUCTION ROUTE SHALL BE RESTRICTED TO 20-FOOT WIDE PATH. ANY ROUTES OTHER THAN THOSE RECOMMENDED MAY REQUIRE ADDITIONAL PERMITTING AND CAUSE DELAYS IN PROJECT.
06. ADEQUATE CONSTRUCTION ENTRANCES SHALL BE PROVIDED OFF ALL PUBLIC ROADWAYS. SITE CONDITIONS AT EACH ENTRANCE SHALL BE EVALUATED BY THE CONSTRUCTION SUPERVISOR TO DETERMINE AMOUNT OF STONE AND TYPE OF GEOTEXTILE FABRIC UNDERLINER.
07. OUTSIDE OF AGRICULTURAL FIELD BOUNDARIES, TEMPORARY OR PERMANENT SEEDING SHALL BE APPLIED IN ALL AREAS LEFT DISTURBED 15 DAYS OR MORE PER SWPPP SPECIFICATIONS.
08. EROSION CONTROL BLANKET OR HYDROMULCH SHALL BE SUBSTITUTED FOR STRAW MULCH ON ALL SLOPES GREATER THAN 3:1 AND ADJACENT TO STREAM CHANNELS.
09. EROSION CONTROL MEASURES ARE ESTIMATED. THE LOCATION AND QUANTITY MUST BE FIELD VERIFIED BY QUALIFIED INDIVIDUAL.
10. TEMPORARY MATTING SHALL BE UTILIZED AS NEEDED FOR ACCESS AND CONSTRUCTION IN WETLAND AREAS.
11. VEGETATIVE MAINTENANCE MAY PRECEDE CONSTRUCTION ACTIVITY BUT EROSION AND SEDIMENT CONTROL PLACEMENT SHALL BE REQUIRED PRIOR TO CONSTRUCTION ACTIVITIES.
12. DISTURBANCE FROM MECHANIZED EQUIPMENT IS NOT PERMITTED IN REGULATED WETLANDS AND STREAMS. HAND CUTTING OR WORK OFF OF CONSTRUCTION MATTING REQUIRED IN THESE AREAS.
13. ALL FORESTRY CLEARING DEBRIS MUST BE REMOVED FROM REGULATED WETLANDS AND STREAMS. CHIPPING OR STOCKPILING PERMISSIBLE IN UPLAND AREAS ONLY.
14. NHD FLOWLINES ARE SHOWN FOR REFERENCE ONLY AND DO NOT NECESSARILY DEFINE THE PRESENCE OF A STREAM. INCREASED WATER FLOW AND/OR EROSION MAY OCCUR IN THESE AREAS, ESPECIALLY WHEN VEGETATION IS REMOVED.

Project Location

REFERENCE:
ESRI WORLD IMAGERY, OBTAINED THROUGH ESRI WORLD IMAGERY MICROSOFT CORPORATION, ACCESSED 01/2017

N

0 275 550 1,100 Feet

Sheet Grid
100ft Corridor
Existing Facility
Project Centerline
Potential Access
NHD Flowline
NWI Wetland
100yr Floodplain
Interstate
State Highway
US Highway
Railroad
County Boundary
Municipal Boundary

DUKE ENERGY.
Cardno Shaping the Future

FIGURE: 4
STORMWATER POLLUTION PREVENTION PLAN
F5484 – 138kV COLUMBIA SUBSTATION
REBUILD AND EXTENSION
DUKE ENERGY
INDEX SHEET

DRAWN BY: COD DATE: 10/2/2018
CHECKED: CJ APPROVED: JT

R:\Projects\15\156\156720M_DukeEnergy9193\M59_SOW22_5484 138kVColumbiaSubstation\GIS\MXD\SWPPP\SWPPP_M59ColumbiaSta_4_SWPPP_KeyMap.mxd

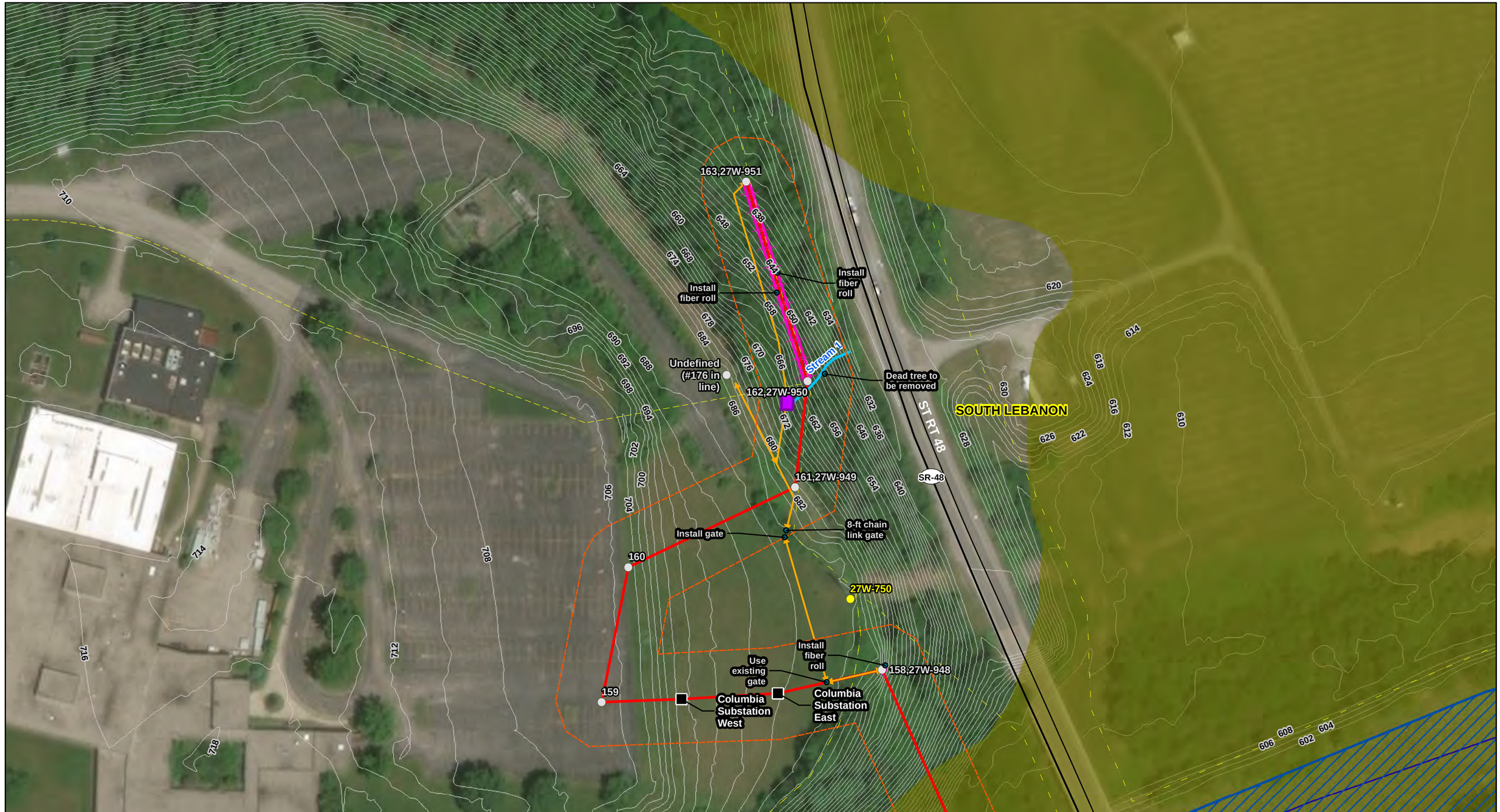

SHEET INDEX

4.01
4.02
4.03
4.04
4.05

REFERENCE:
ESRI WORLD IMAGERY, OBTAINED THROUGH ESRI WORLD IMAGERY MICROSOFT CORPORATION, ACCESSED 01/2017

N

0 50 100 Feet

- Existing Facility
- Identified Feature
- Proposed Structure
- Existing Structure
- Fence Line
- Parcels
- 100ft Corridor
- Fiber Roll
- Stream Crossing
- Construction Matting
- Delineated Wetland
- Existing Culvert
- Stormwater Inlet
- Potential Access
- Ditch
- Delineated Stream
- Street
- Interstate
- State Highway
- US Highway
- Railroad
- Little Miami River
- Project Centerline
- NWI Wetland
- NHD Flowline
- 100yr Floodplain
- Municipal Boundary
- 2' Contour Line

DUKE ENERGY

Cardno Shaping the Future

FIGURE: 4.01
STORMWATER POLLUTION PREVENTION PLAN
F5484 – 138kV COLUMBIA SUBSTATION
REBUILD AND EXTENSION
DUKE ENERGY
ENVIRONMENTAL ACCESS/ EROSION CONTROL PLAN

DRAWN BY: COD DATE: 10/2/2018
CHECKED: CJ APPROVED: JT

R:\Projects\15\156\156720M_DukeEnergy9193\M59_SOW22_5484 138kVColumbiaSubstation\GIS\MXD\SWPPP\SWPPP_M59ColumbiaSta_4plus_SWPPPPPP_set.mxd

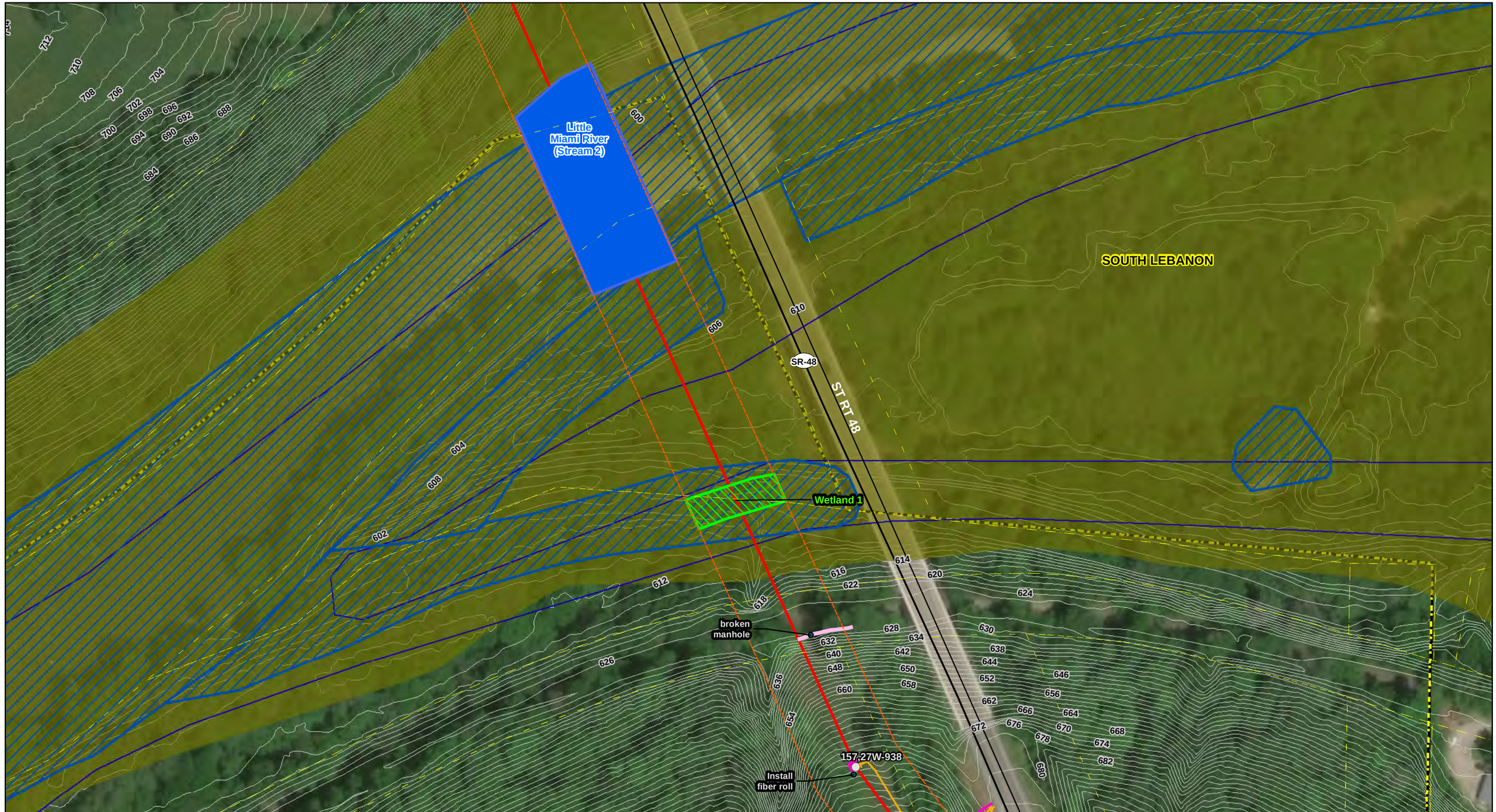

SHEET INDEX

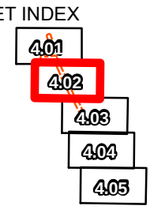

REFERENCE:
ESRI WORLD IMAGERY, OBTAINED THROUGH ESRI WORLD IMAGERY MICROSOFT CORPORATION, ACCESSED 01/2017

N

0 50 100 Feet

- Existing Facility
- Identified Feature
- Proposed Structure
- Existing Structure
- Fence Line
- Parcels
- 100ft Corridor
- Fiber Roll
- Stream Crossing
- Construction Matting
- Delineated Wetland
- Existing Culvert
- Stormwater Inlet
- Potential Access
- Ditch
- Delineated Stream
- Street
- Interstate
- State Highway
- US Highway
- Railroad
- Little Miami River
- Project Centerline
- NWI Wetland
- NHD Flowline
- 100yr Floodplain
- Municipal Boundary
- 2' Contour Line

DUKE ENERGY.

Cardno Shaping the Future

FIGURE: 4.02
STORMWATER POLLUTION PREVENTION PLAN
F5484 – 138kV COLUMBIA SUBSTATION
REBUILD AND EXTENSION
DUKE ENERGY
ENVIRONMENTAL ACCESS/ EROSION CONTROL PLAN

DRAWN BY: COD DATE: 10/2/2018
CHECKED: CJ APPROVED: JT

R:\Projects\15\156\156720M_DukeEnergy9193\M59_SOW22_5484 138kVColumbiaSubstation\GIS\MXD\SWPPP\SWPPP_M59ColumbiaSta_4plus_SWPPPPPP_set.mxd

SHEET INDEX

4.01
4.02
4.03
4.04
4.05

REFERENCE:
ESRI WORLD IMAGERY, OBTAINED THROUGH ESRI WORLD IMAGERY MICROSOFT CORPORATION, ACCESSED 01/2017

N

0 50 100 Feet

- Existing Facility
- Identified Feature
- Proposed Structure
- Existing Structure
- Fence Line
- Parcels
- 100ft Corridor
- Fiber Roll
- Stream Crossing
- Construction Matting
- Delineated Wetland
- Existing Culvert
- Stormwater Inlet
- Potential Access
- Ditch
- Delineated Stream
- Street
- Interstate
- State Highway
- US Highway
- Railroad
- Little Miami River
- Project Centerline
- NWI Wetland
- NHD Flowline
- 100yr Floodplain
- Municipal Boundary
- 2' Contour Line

DUKE ENERGY.

Cardno Shaping the Future

FIGURE: 4.03
STORMWATER POLLUTION PREVENTION PLAN
F5484 – 138kV COLUMBIA SUBSTATION
REBUILD AND EXTENSION
DUKE ENERGY
ENVIRONMENTAL ACCESS/ EROSION CONTROL PLAN

DRAWN BY: COD DATE: 10/2/2018
CHECKED: CJ APPROVED: JT

R:\Projects\15\156\156720M_DukeEnergy9193\M59_SOW22_5484 138kVColumbiaSubstation\GIS\MXD\SWPPP\SWPPP_M59ColumbiaSta_4plus_SWPPPPPP_set.mxd

SHEET INDEX

4.01
4.02
4.03
4.04
4.05

REFERENCE:
ESRI WORLD IMAGERY, OBTAINED THROUGH ESRI WORLD IMAGERY MICROSOFT CORPORATION, ACCESSED 01/2017

N

0 50 100 Feet

- Existing Facility
- Identified Feature
- Proposed Structure
- Existing Structure
- Fence Line
- Parcels
- 100ft Corridor
- Fiber Roll
- Stream Crossing
- Construction Matting
- Delineated Wetland
- Existing Culvert
- Stormwater Inlet
- Potential Access
- Ditch
- Delineated Stream
- Street
- Interstate
- State Highway
- US Highway
- Railroad
- Little Miami River
- Project Centerline
- NWI Wetland
- NHD Flowline
- 100yr Floodplain
- Municipal Boundary
- 2' Contour Line

DUKE ENERGY.

Cardno Shaping the Future

FIGURE: 4.04
STORMWATER POLLUTION PREVENTION PLAN
F5484 – 138kV COLUMBIA SUBSTATION
REBUILD AND EXTENSION
DUKE ENERGY
ENVIRONMENTAL ACCESS/ EROSION CONTROL PLAN

DRAWN BY: COD DATE: 10/2/2018
CHECKED: CJ APPROVED: JT

R:\Projects\15\156\156720M_DukeEnergy9193\M59_SOW22_5484 138kVColumbiaSubstation\GIS\MXD\SWPPP\SWPPP_M59ColumbiaSta_4plus_SWPPPPPP_set.mxd

148,27W-929
Wetland 2
147,27W-928
Install fiber roll
146A,27W-927
Stream 4
Install stream crossing
146,27W-926
SOUTH LEBANON
145,27W-925
144,27W-924
Golf Course Facility
4-ft farm gate
WINDING RIVER
WINDING RIVER
SR-48
ST RT 48
LEBANON
SUNNY
754 752 756 758 760 762 764 766 768 770 772 774 776 778 782 784 786 788 790 792 794 796 798 800 802 804 806 808 810 812 814 816 818 820 822 824 826 828

SHEET INDEX

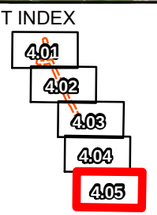

REFERENCE:
ESRI WORLD IMAGERY, OBTAINED THROUGH ESRI WORLD IMAGERY MICROSOFT CORPORATION, ACCESSED 01/2017

N

0 50 100 Feet

- Existing Facility
- Identified Feature
- Proposed Structure
- Existing Structure
- Fence Line
- Parcels
- 100ft Corridor
- Fiber Roll
- Stream Crossing
- Construction Matting
- Delineated Wetland
- Existing Culvert
- Stormwater Inlet
- Potential Access
- Ditch
- Delineated Stream
- Street
- Interstate
- State Highway
- US Highway
- Railroad
- Little Miami River
- Project Centerline
- NWI Wetland
- NHD Flowline
- 100yr Floodplain
- Municipal Boundary
- 2' Contour Line

DUKE ENERGY.

Cardno Shaping the Future

FIGURE: 4.05
STORMWATER POLLUTION PREVENTION PLAN
F5484 – 138kV COLUMBIA SUBSTATION
REBUILD AND EXTENSION
DUKE ENERGY
ENVIRONMENTAL ACCESS/ EROSION CONTROL PLAN

DRAWN BY: COD DATE: 10/2/2018
CHECKED: CJ APPROVED: JT

R:\Projects\15\156\156720M_DukeEnergy9193\M59_SOW22_5484 138kVColumbiaSubstation\GIS\MXD\SWPPP\SWPPP_M59ColumbiaSta_4plus_SWPPPPPP_set.mxd

Appendix B

Storm Water Pollution Prevention Plan Typical Details

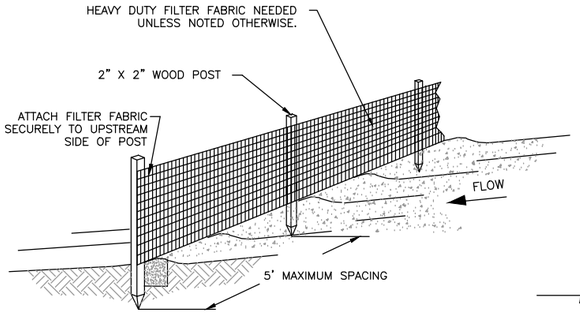

ISOMETRIC VIEW

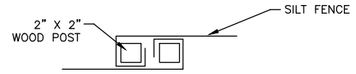

JOINT WRAP

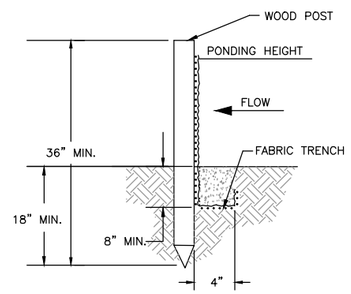

TYPICAL SECTION

NOTES:

1. SILT FENCE SHALL BE PLACED ON SLOPE CONTOURS TO MAXIMIZE PONDING EFFICIENCY.
2. INSPECT AND REPAIR FENCE AFTER EACH STORM EVENT AND REMOVE SEDIMENT WHEN IT REACHES ONE-HALF HEIGHT OF FENCE OR FABRIC STARTS TO BULGE.
3. REMOVED SEDIMENT SHALL BE DEPOSITED TO AN AREA THAT WILL NOT CONTRIBUTE SEDIMENT OFF-SITE AND CAN BE PERMANENTLY STABILIZED.
4. TURN END OF SILT FENCE UP SLOPE TO PREVENT BYPASS FLOW AND ALLOW FOR PONDING.

SILT FENCE

001

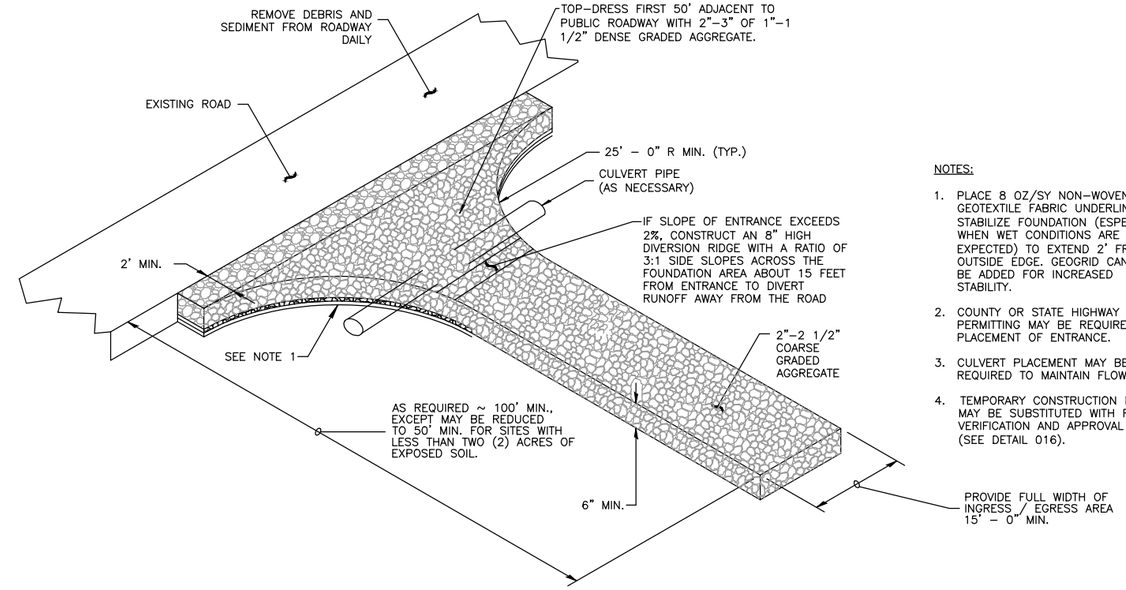

NOTES:

1. PLACE 8 OZ/SY NON-WOVEN GEOTEXTILE FABRIC UNDERLINER TO STABILIZE FOUNDATION (ESPECIALLY WHEN WET CONDITIONS ARE EXPECTED) TO EXTEND 2' FROM OUTSIDE EDGE. GEOGRID CAN ALSO BE ADDED FOR INCREASED STABILITY.
2. COUNTY OR STATE HIGHWAY ACCESS PERMITTING MAY BE REQUIRED FOR PLACEMENT OF ENTRANCE.
3. CULVERT PLACEMENT MAY BE REQUIRED TO MAINTAIN FLOW.
4. TEMPORARY CONSTRUCTION MATTING MAY BE SUBSTITUTED WITH FIELD VERIFICATION AND APPROVAL (SEE DETAIL 016).

TEMPORARY CONSTRUCTION ENTRANCE

002

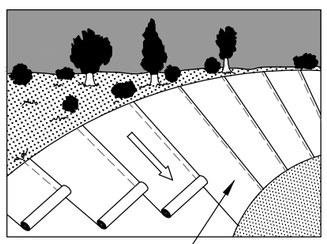

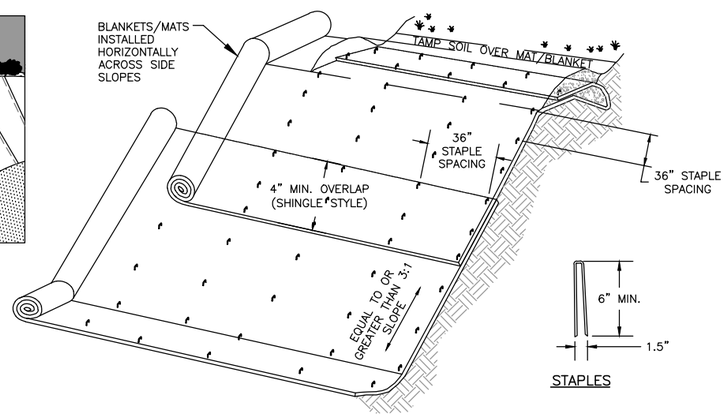

STAPLES

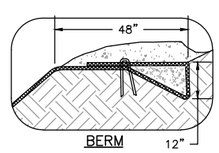

BERM

NOTES:

1. SLOPE SURFACE SHALL BE FREE OF ROCKS, CLODS, STICKS AND GRASS. MATS/BLANKETS SHALL HAVE GOOD SOIL CONTACT.
2. APPLY PERMANENT SEEDING BEFORE PLACING BLANKETS.
3. LAY BLANKETS LOOSELY AND STAKE OR STAPLE TO MAINTAIN DIRECT CONTACT WITH THE SOIL. DO NOT STRETCH.
4. USE ON SIDE SLOPES EXCEEDING A 3:1 SLOPE AND DISTURBED STREAMBANKS.
5. THE FOLLOWING BLANKET TYPES SHALL BE UTILIZED:
   A. LONG-TERM BIODEGRADABLE DOUBLE-NET COCONUT BLANKET ON STREAMBANKS.
   B. SHORT-TERM BIODEGRADABLE DOUBLE-NET STRAW BLANKET ON 3:1 SLOPES OR GREATER.
   C. SHORT-TERM BIODEGRADABLE SINGLE-NET STRAW ON LESSER SLOPES, FLAT FLOODPLAIN, AND WORKSPACE AREAS.
6. FOR STREAMBANK STABILIZATION;
   A. TUCK/UNDERLAP BASE OF BLANKET TO PREVENT HIGH WATER FROM REMOVING BLANKET AND SEED.
   B. STAPLE SPACING MAY NEED TO BE DECREASED.
   C. PREPARE SUBGRADE PRIOR TO INSTALLING BLANKET BY REMOVING DISPLACED ROCKS AND WOODY DEBRIS.

EROSION CONTROL BLANKET

003

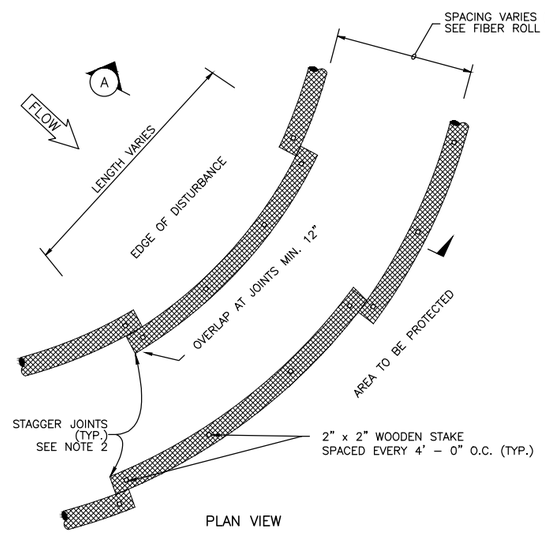

PLAN VIEW

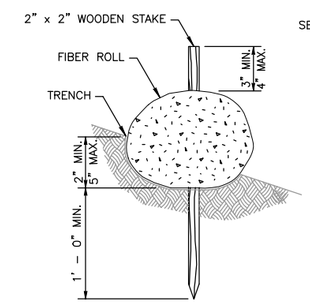

TYPICAL SECTION

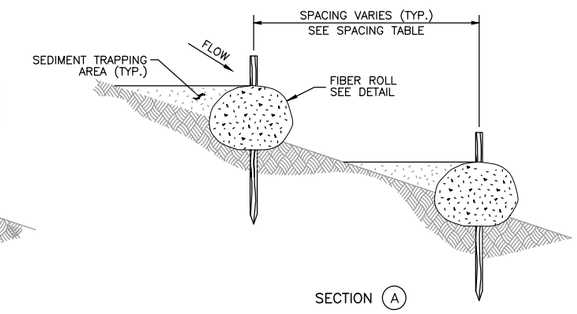

SECTION (A)

SPACING TABLE	
SLOPE	MAXIMUM SPACING
1:1	10' - 0"
2:1	20' - 0"
3:1	30' - 0"
4:1	40' - 0"

* INSTALL FIRST ROW AT TOP OF BANK.
INSTALL LAST ROW 10' FROM TOE OF SLOPE.

NOTES:

1. INSTALL FIBER ROLLS ALONG CONTOURS DURING FINAL RESTORATION TO CHECK FLOW TO ALLOW ADEQUATE REVEGETATION.
2. ABUT ADJACENT FIBER ROLLS TIGHTLY WHILE OVERLAPPING THE ENDS. STAGGER JOINTS WITH THE NEXT PARALLEL ROW.
3. PILOT HOLES MAY BE DRIVEN THROUGH THE FIBER ROLLS AND INTO THE SOIL WHEN SOIL CONDITIONS REQUIRE.
4. FIBER ROLLS SHALL BE INSPECTED REGULARLY, AND IMMEDIATELY AFTER A RAINFALL PRODUCES RUNOFF, TO ENSURE THEY REMAIN THOROUGHLY ENTRENCHED AND IN CONTACT WITH THE SOIL.
5. A SINGLE ROW MAY BE INSTALLED ON FLAT SLOPES.

FIBER ROLL

005

INTENTIONALLY LEFT BLANK

004

REVISIONS			
NO.	DATE	DESCRIPTION	APPROVED BY

DESIGN BY CAM/MRW	DATE 12/18/2015
DRAWN BY KTH	JOB NO. - -
CHECKED BY MRW	APPROVED CAM

DUKE ENERGY.

STORM WATER POLLUTION PREVENTION PLAN
TYPICAL DETAILS

SCALE N.T.S.
DRAWING NO.
SHEET 1 OF 5

Z:\Energy\2015\D1515252.02 - Duke Energy CAD Detail Su\CAD\Production Drawings\D1550603-00-000-00-C-DETAILS.dwg, 7/1/16 at 10:35 AM, mcallma,

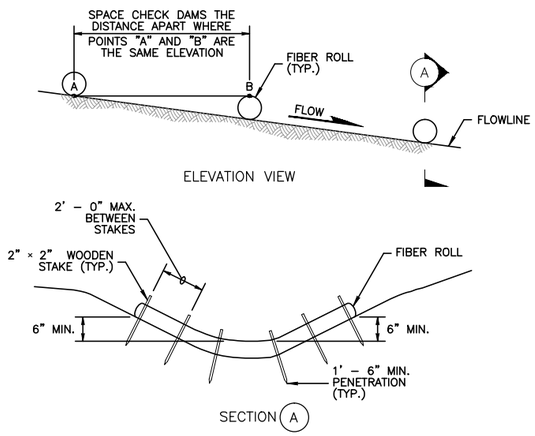

NOTE:
1. STRAW WATTLE SHALL NOT BE USED IN A CHECK DAM APPLICATION.

FIBER ROLL CHECK DAM 006

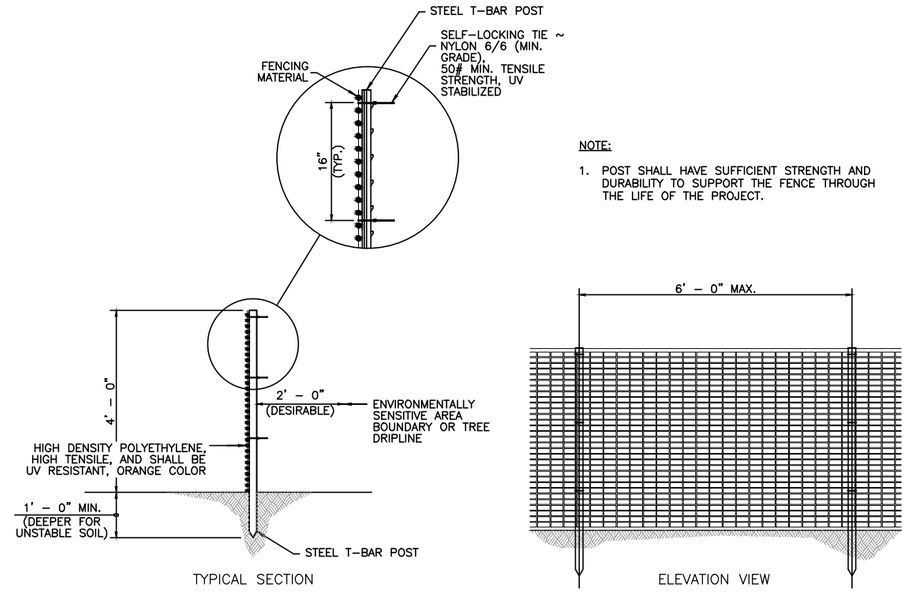

NOTE:
1. POST SHALL HAVE SUFFICIENT STRENGTH AND DURABILITY TO SUPPORT THE FENCE THROUGH THE LIFE OF THE PROJECT.

CONSTRUCTION BARRIER FENCING 007

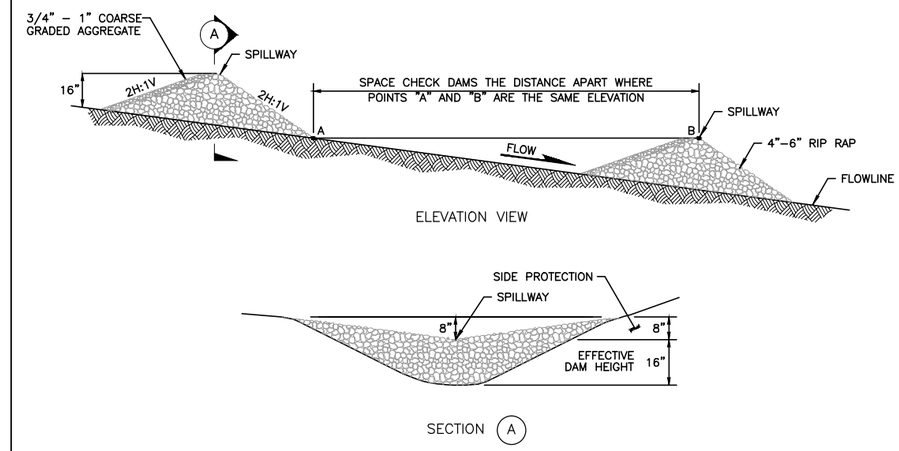

ROCK CHECK DAM 008

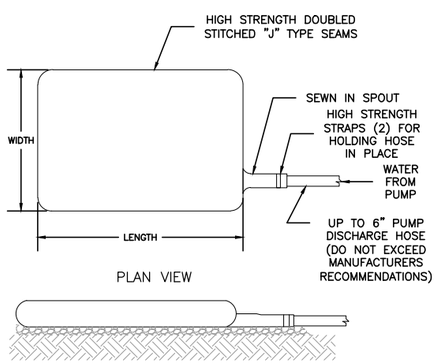

NOTES:

1. THE NECK OF THE FILTER BAG SHALL BE TIGHTLY STRAPPED (MINIMUM TWO STRAPS) TO THE DISCHARGE HOSE.
2. THE FILTER BAG IS FULL WHEN IT NO LONGER CAN EFFICIENTLY FILTER SEDIMENT OR PASS WATER AT A REASONABLE RATE.
3. FLOW RATES VARY DEPENDING ON THE SIZE OF THE DEWATERING DEVICE, AMOUNT OF SEDIMENT DISCHARGED INTO THE DEWATERING DEVICE, THE TYPE OF GROUND, ROCK, OR OTHER SUBSTANCE UNDER THE BAG AND THE DEGREE OF THE SLOPE ON WHICH THE BAG LIES. THE FILTER BAG SHOULD BE SIZED TO ACCOMMODATE THE ANTICIPATED FLOW RATES FROM THE TYPE OF PUMP USED. TYPICALLY FILTER BAGS CAN HANDLE FLOW RATES OF UP TO 1000 GALLONS PER MINUTE, BUT IN ALL CASES FOLLOW THE MANUFACTURERS RECOMMENDATIONS FOR FLOW RATES.
4. USE OF EXCESSIVE FLOW RATES OR OVERFILLING THE DEWATERING DEVICE WITH SEDIMENT WILL CAUSE RUPTURES OF THE BAG OR FAILURE OF THE HOSE ATTACHMENT STRAPS.
5. THE FILTER BAG SHALL BE REMOVED AND DISPOSED OF OFFSITE..
6. EACH STANDARD DEWATERING DEVICE SHALL HAVE A FILL SPOUT LARGE ENOUGH TO ACCOMMODATE THE DISCHARGE HOSE. USE TWO STAINLESS STEEL STRAPS TO SECURE THE HOSE AND PREVENT PUMPED WATER FROM ESCAPING WITHOUT BEING FILTERED.
7. THE DEWATERING DEVICE SHALL BE A NONWOVEN BAG, WHICH IS SEWN WITH A DOUBLE NEEDLE STITCHING USING A HIGH STRENGTH THREAD.
8. THE DEWATERING DEVICE SEAMS SHALL HAVE AN AVERAGE WIDE WITH STRENGTH PER ASTM D 4884 OF 100 LB/IN.
9. THE GEOTEXTILE FABRIC SHALL BE A NONWOVEN FABRIC WITH THE FOLLOWING PROPERTIES:

PROPERTIES	TEST METHOD	ENGLISH	METRIC
GRAB TENSILE	ASTM D – 4632	250 LBS.	113 KG
PUNCTURE	ASTM D – 4833	165 LBS.	75 KG
FLOW RATE	ASTM D – 4491	70 GAL/MIN/SQ FT	25 LITERS/MIN/SQ METER
PERMITIVITY	ASTM D – 4491	1.3 SEC. – 1	1.3 SEC. – 1
MULLEN BURST	ASTM D – 3786	550 LBS./SQ INCH	3.79 Mpa
UV RESISTANT	ASTM D – 4355	70%	70%
AOS % RETAINED	ASTM D – 4751	100%	100%

*ALL PROPERTIES ARE MINIMUM AVERAGE ROLL VALUE

DEWATERING BAG 009

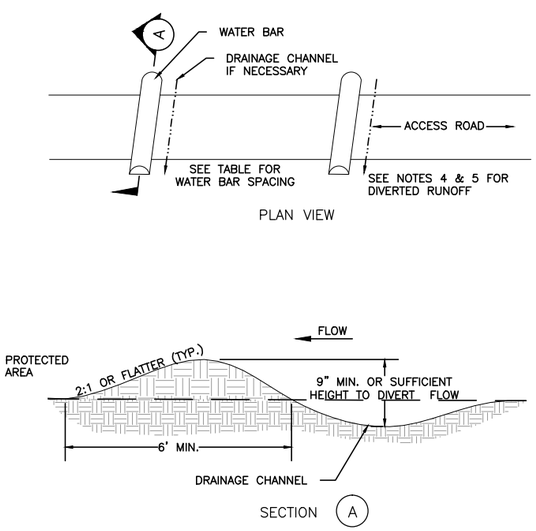

NOTES:

1. SIDE SLOPES OF WATER BAR SHALL BE CONSTRUCTED SUFFICIENTLY FLAT TO ACCOMMODATE THE EXPECTED TRAFFIC.
2. THE SPACING BETWEEN WATER BARS SHALL BE AS NOTED (SEE SPACING TABLE):

WATER BAR SPACING TABLE

ROAD GRADE (%)	DISTANCE (FT.)
1	400
2	250
5	135
10	80
15	60
20	45

3. THE FIELD LOCATION SHALL BE ADJUSTED AS NEEDED TO PROVIDE A STABILIZED SAFE OUTLET.
4. DRAINAGE CHANNELS SHALL BE DIRECTED ONTO STABLE VEGETATIVE AREA OR A SEDIMENT TRAP OR A BASIN IF CONTRIBUTING AREA IS NOT STABLE.
5. DRAINAGE CHANNELS SHALL BE CONSTRUCTED WITH ≤ 2% WITH POSITIVE OUTLET TO STABLE AREA.
6. DIVERSIONS/WATER BARS SHALL BE COMPACTED BY TRAVERSING WITH EQUIPMENT DURING CONSTRUCTION.
7. THE WATER BARS SHALL BE ANGLED SLIGHTLY DOWNSLOPE ACROSS THE CENTERLINE OF THE TRAVEL LANE.

WATER BAR 010

REVISIONS			
NO.	DATE	DESCRIPTION	APPROVED BY

DESIGN BY CAM/MRW	DATE 12/18/2015
DRAWN BY KTH	JOB NO. – –
CHECKED BY MRW	APPROVED CAM

DUKE ENERGY®

STORM WATER POLLUTION PREVENTION PLAN
TYPICAL DETAILS

SCALE N.T.S.

DRAWING NO.

SHEET 2 OF 5

Z:\Energy\2015\D151525.02 - Duke Energy CAD Detail Sal\CAD\Production Drawings\D150603-00-000-00-C-DETAILS.dwg, 12/18/15 at 1:41 PM, hsynthkt,

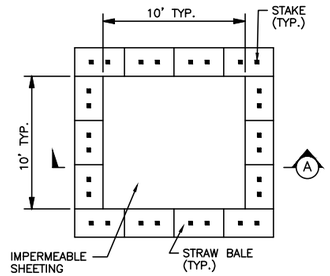

PLAN VIEW

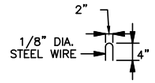

STAPLES

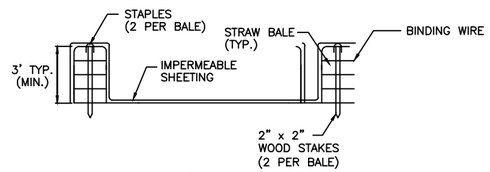

SECTION A

NOTES:

1. LOCATE WASHOUT STRUCTURE A MINIMUM OF 50 FEET AWAY FROM OPEN CHANNELS, STORM DRAIN INLETS, SENSITIVE AREAS, WETLANDS, BUFFERS AND WATER COURSES AND AWAY FROM CONSTRUCTION TRAFFIC.
2. SIZE WASHOUT STRUCTURE FOR VOLUME NECESSARY TO CONTAIN WASH WATER AND SOLIDS AND MAINTAIN AT LEAST 4 INCHES OF FREEBOARD. TYPICAL DIMENSIONS ARE 10 FEET X 10 FEET X 3 FEET DEEP.
3. PREPARE SOIL BASE FREE OF ROCKS OR OTHER DEBRIS THAT MAY CAUSE TEARS OR HOLES IN THE LINER. FOR LINER, USE 10 MIL OR THICKER UV RESISTANT, IMPERMEABLE SHEETING, FREE OF HOLES AND TEARS OR OTHER DEFECTS THAT COMPROMISE IMPERMEABILITY OF THE MATERIAL.
4. PROVIDE A SIGN FOR THE WASHOUT IN CLOSE PROXIMITY TO THE FACILITY.
5. KEEP CONCRETE WASHOUT STRUCTURE WATER TIGHT. REPLACE IMPERMEABLE LINER IF DAMAGED (E.G., RIPPED OR PUNCTURED). EMPTY OR REPLACE WASHOUT STRUCTURE THAT IS 75 PERCENT FULL, AND DISPOSE OF ACCUMULATED MATERIAL PROPERLY. DO NOT REUSE PLASTIC LINER. WET-VACUUM STORED LIQUIDS THAT HAVE NOT EVAPORATED AND DISPOSE OF IN AN APPROVED MANNER. PRIOR TO FORECASTED RAINSTORMS, REMOVE LIQUIDS OR COVER STRUCTURE TO PREVENT OVERFLOWS. REMOVE HARDENED SOLIDS, WHOLE OR BROKEN UP, FOR DISPOSAL OR RECYCLING. MAINTAIN RUNOFF DIVERSION AROUND EXCAVATED WASHOUT STRUCTURE UNTIL STRUCTURE IS REMOVED.
6. BALES CAN BE TWO STACKED OR PARTIALLY EXCAVATED TO REACH 3FT DEPTH (MIN.).
7. PREFABRICATED UNITS MAY BE USED WITH APPROVAL.

CONCRETE WASHOUT

011

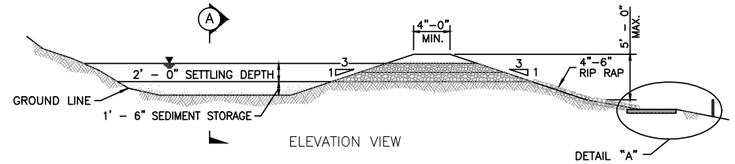

ELEVATION VIEW

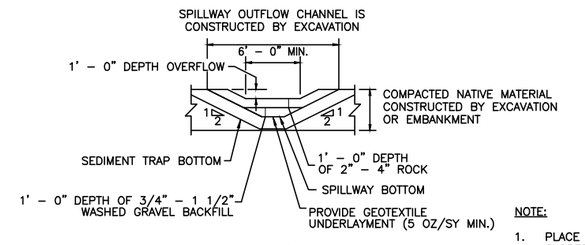

SECTION A

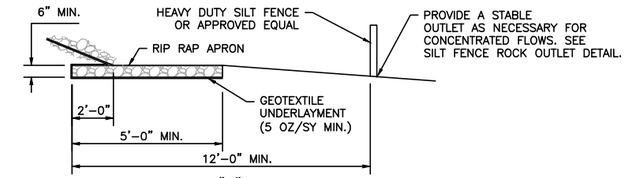

DETAIL "A"

NOTE:

1. PLACE GEOTEXTILE UNDER THE SPILLWAY SIDE SLOPES, SPILLWAY BOTTOM, AND RIP RAP APRON. PROVIDE A CONTINUOUS LAYER BETWEEN THE GRAVEL/ROCK AND THE NATIVE EARTHEN MATERIAL.

TEMPORARY SEDIMENT TRAP

012

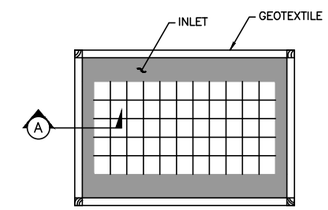

PLAN VIEW
(CROSS BRACES NOT SHOWN)

NOTES:

1. PREFABRICATED UNITS MAY BE USED WITH APPROVAL.
2. STRUCTURE SHALL BE CONSTRUCTED SUCH THAT GEOTEXTILE MATERIAL SHALL BE FASTENED TO POSTS CREATING A SEAM-LESS JOINT.
3. ENSURE THAT PONDING HEIGHT OF WATER DOES NOT CAUSE FLOODING ON ADJACENT ROADWAYS OR PRIVATE PROPERTY.

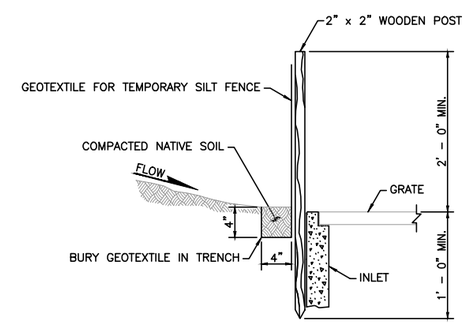

SECTION A

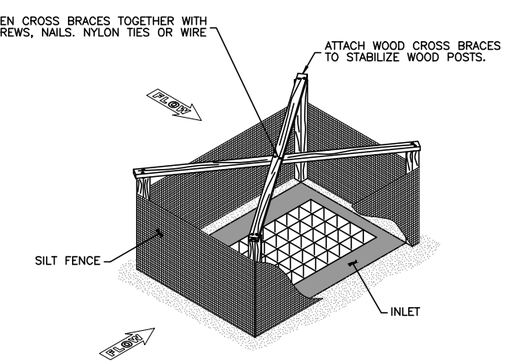

ISOMETRIC VIEW
(ENTIRE FENCE NOT SHOWN FOR ILLUSTRATIVE PURPOSES)

NON-PAVED AREA INLET PROTECTION

014

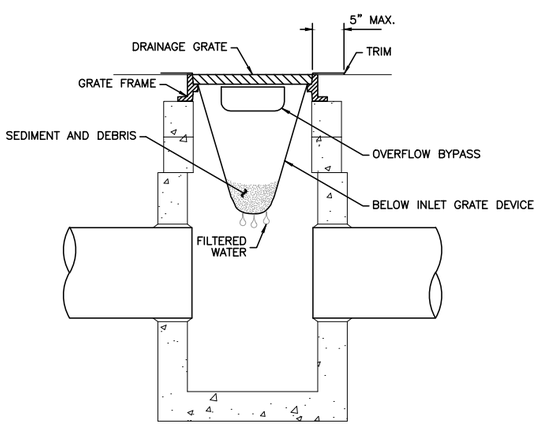

TYPICAL SECTION

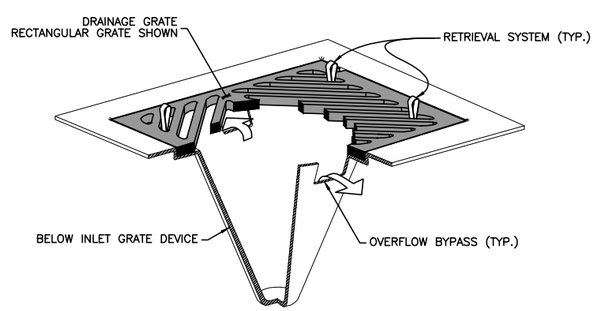

ISOMETRIC VIEW

PAVED AREA INLET PROTECTION

013

REVISIONS			
NO.	DATE	DESCRIPTION	APPROVED BY

DESIGN BY CAM/MRW	DATE 12/18/2015
DRAWN BY KTH	JOB NO. --
CHECKED BY MRW	APPROVED CAM

DUKE ENERGY.

STORM WATER POLLUTION PREVENTION PLAN
TYPICAL DETAILS

SCALE N.T.S.	
DRAWING NO.	
SHEET 3	OF 5

Z:\Energy\2015\D151525.02 - Duke Energy CAD Detail Sol\CAD\Production Drawings\D150603-00-000-00-C-DETAILS.dwg, 12/21/15 at 12:13 PM, huynh4c,

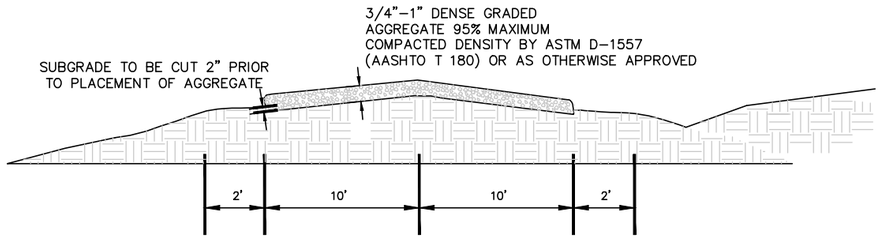

CROWN ROADS WITH MIN 2", MAX 4", ELEVATION CHANGE

NOTE:

1. VARYING FIELD CONDITIONS MAY WARRANT ALTERNATE AGGREGATE GRADATIONS.

TEMPORARY ACCESS DRIVE

015

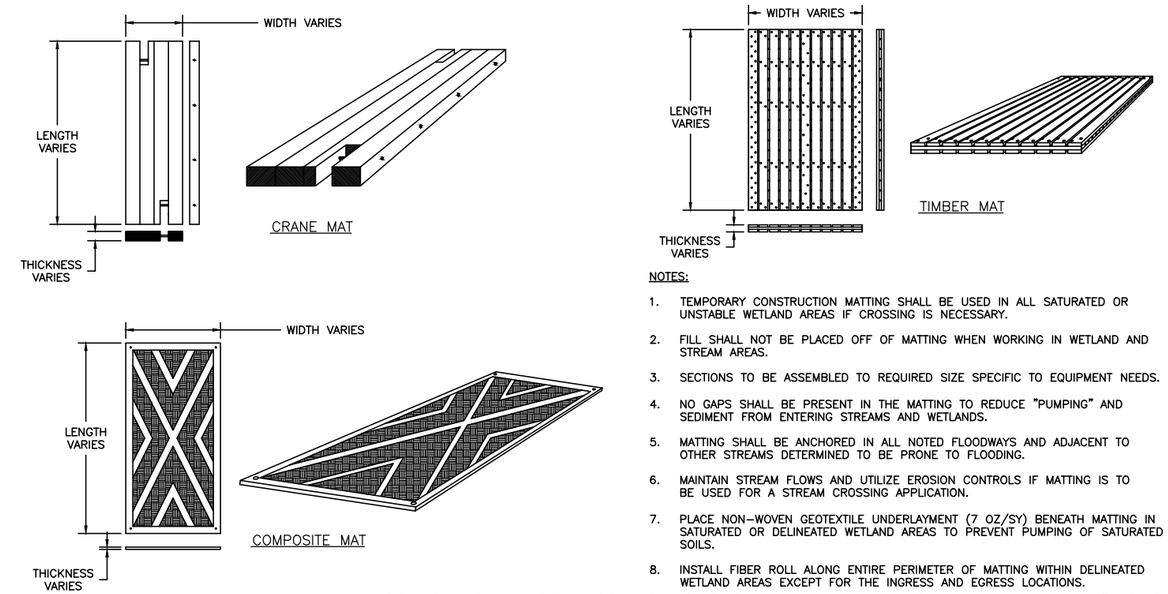

NOTES:

1. TEMPORARY CONSTRUCTION MATTING SHALL BE USED IN ALL SATURATED OR UNSTABLE WETLAND AREAS IF CROSSING IS NECESSARY.
2. FILL SHALL NOT BE PLACED OFF OF MATTING WHEN WORKING IN WETLAND AND STREAM AREAS.
3. SECTIONS TO BE ASSEMBLED TO REQUIRED SIZE SPECIFIC TO EQUIPMENT NEEDS.
4. NO GAPS SHALL BE PRESENT IN THE MATTING TO REDUCE "PUMPING" AND SEDIMENT FROM ENTERING STREAMS AND WETLANDS.
5. MATTING SHALL BE ANCHORED IN ALL NOTED FLOODWAYS AND ADJACENT TO OTHER STREAMS DETERMINED TO BE PRONE TO FLOODING.
6. MAINTAIN STREAM FLOWS AND UTILIZE EROSION CONTROLS IF MATTING IS TO BE USED FOR A STREAM CROSSING APPLICATION.
7. PLACE NON–WOVEN GEOTEXTILE UNDERLAYMENT (7 OZ/SY) BENEATH MATTING IN SATURATED OR DELINEATED WETLAND AREAS TO PREVENT PUMPING OF SATURATED SOILS.
8. INSTALL FIBER ROLL ALONG ENTIRE PERIMETER OF MATTING WITHIN DELINEATED WETLAND AREAS EXCEPT FOR THE INGRESS AND EGRESS LOCATIONS.

TEMPORARY CONSTRUCTION MATTING

016

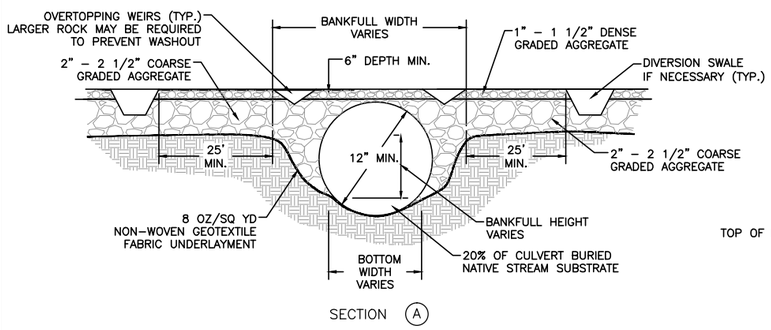

SECTION (A)

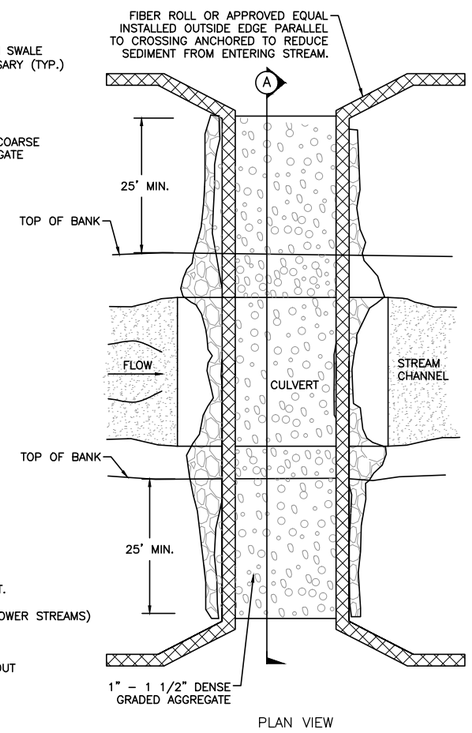

PLAN VIEW

NOTES:

1. THE SLOPE OF THE BED WITHIN THE ENCAPSULATION MATCHES THE SLOPE OF THE BED BOTH IMMEDIATELY UPSTREAM AND DOWNSTREAM.
2. NO SOIL SHALL BE USED FOR CONSTRUCTION OF TEMPORARY CROSSING OR PLACED WITHIN STREAM CHANNEL
3. CULVERTED CROSSINGS MAY REQUIRE ADDITIONAL STATE AND/OR FEDERAL PERMITTING. NOTIFY ENVIRONMENTAL COORDINATOR PRIOR TO IMPLEMENTATION OR CONSIDERATION TO MAKING PERMANENT.
4. CULVERT DIAMETER SHALL BE AT LEAST 3X DEPTH OF NORMAL FLOW. (2X DEPTH IS ALLOWED IN DEEP, SLOWER STREAMS)
5. IF MULTIPLE CULVERTS ARE NEEDED TO CROSS STREAM LEAVE 12" SPACE BETWEEN CULVERTS.
6. FOR FINAL RESTORATION, REMOVE CULVERT AND ALL STONE FROM STREAM AS PRACTICALLY POSSIBLE WITHOUT ADDITIONAL DAMAGE.

TEMPORARY CULVERT STREAM CROSSING

017

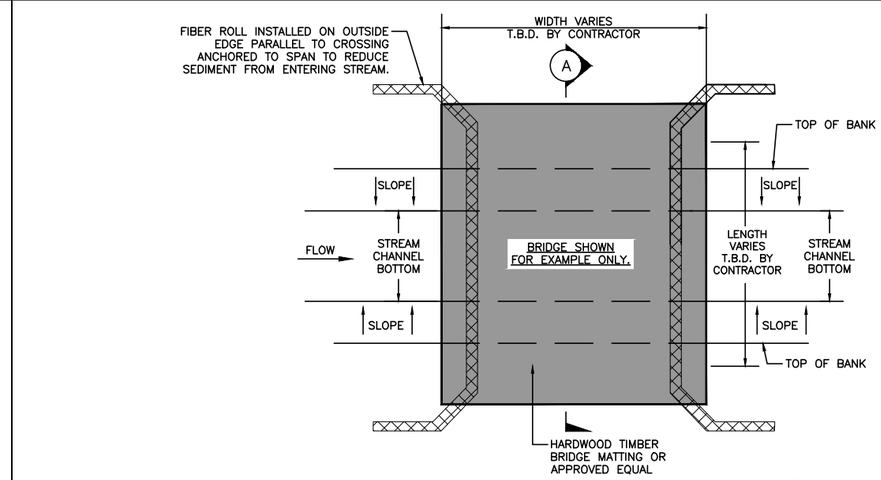

PLAN VIEW

NOTES:

1. DETAIL SHOWS BRIDGE EXAMPLE ONLY. CONTRACTOR TO PROVIDE SIMILAR OR APPROVED EQUAL.
2. BRIDGE MATERIAL, DIMENSIONS, AND LOAD DESIGN TO BE DETERMINED BY CONTRACTOR SPECIFIC TO PROJECT AND EQUIPMENT NEEDS.
3. BRIDGE SHALL CLEAR SPAN STREAM PERPENDICULARLY FROM TOP OF BANK TO TOP OF BANK WITHOUT DISTURBING STREAM BANKS.
4. NO OBSTRUCTIONS OR EQUIPMENT SHALL BE PLACED IN CHANNEL AND FLOW MUST BE MAINTAINED.
5. ANY BEARING STRUCTURES SHALL BE SECURED FOR STABILITY AND SUPPORTED ON NATIVE SUBGRADE WITHOUT POURED FOUNDATIONS.
6. ADDITIONAL CONSTRUCTION TIMBER MATTING MAY BE REQUIRED FOR GRADE COMPENSATION AT APPROACHES.
7. BRIDGE SHALL BE PROPERLY ANCHORED TO PREVENT DISPLACEMENT BY STREAM FLOODING.

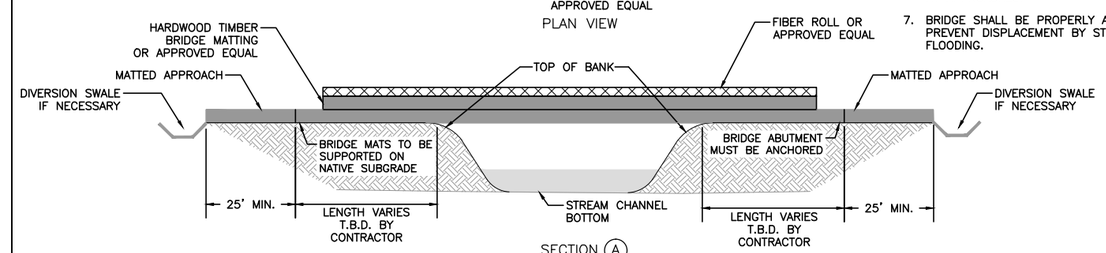

SECTION (A)

TEMPORARY CLEAR SPAN BRIDGE CROSSING

018

REVISIONS			
NO.	DATE	DESCRIPTION	APPROVED BY

DESIGN BY CAM/MRW	DATE 12/18/2015
DRAWN BY KTH	JOB NO. – –
CHECKED BY MRW	APPROVED CAM

DUKE ENERGY®

STORM WATER POLLUTION PREVENTION PLAN
TYPICAL DETAILS

SCALE N.T.S.

DRAWING NO.

SHEET 4 OF 5

Z:\Energy\2015\D151525.02 - Duke Energy CAD Detail Sol\CAD\Production Drawings\D150603-00-000-00-C-DETAILS.dwg, 1/27/16 at 11:49 AM, hsynth4t,

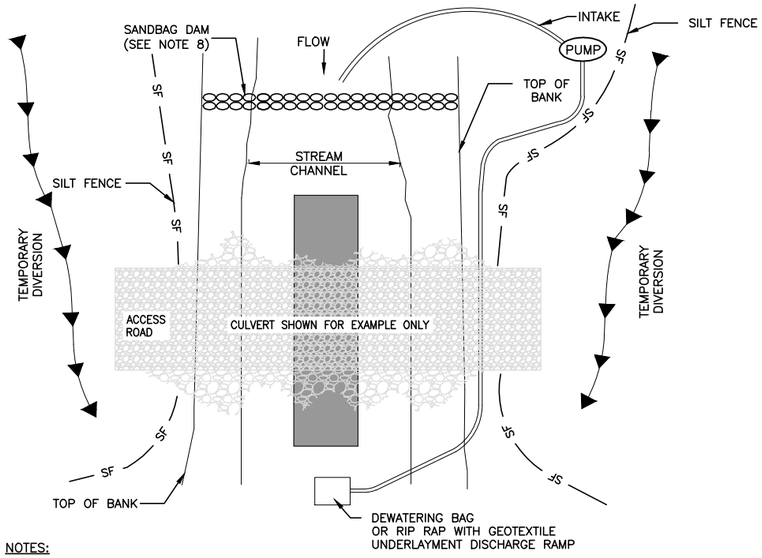

NOTES:

1. INSTALL SILT FENCE, PUMP, DEWATERING BAG, AND SANDBAG DAM BEFORE TRENCHING STREAM.
2. PUMP MUST BE OF SUFFICIENT CAPACITY TO CONVEY NORMAL AND/OR EXISTING STREAM FLOW OVER SANDBAG DAM. A BACK-UP PUMP OF EQUAL CAPACITY MUST BE AVAILABLE ON-SITE DURING CONSTRUCTION OF THE CROSSING.
3. ANY SOIL PILES TO BE PLACED A MINIMUM OF 10 FEET FROM TOP OF BANK.
4. INSTALL DIVERSIONS AT APPROACHES TO STREAM CROSSING AND SILT FENCE (AS INDICATED ON PLAN SHEETS).
5. MAINTAIN SURFACE OF TEMPORARY EQUIPMENT CROSSING TO PREVENT SOIL DISCHARGES TO STREAM.
6. APPROACHES TO CROSSINGS ARE NOT TO EXCEED A DEPTH OF 6 INCHES ABOVE ORIGINAL GRADE.
7. RESTORE AREA TO APPROXIMATE ORIGINAL CONTOURS.
8. ADJUST HEIGHT AS NEEDED BASED ON FLOW CONDITIONS AND PUMP INTAKE.

TEMPORARY STREAM CROSSING PUMP DIVERSION 019

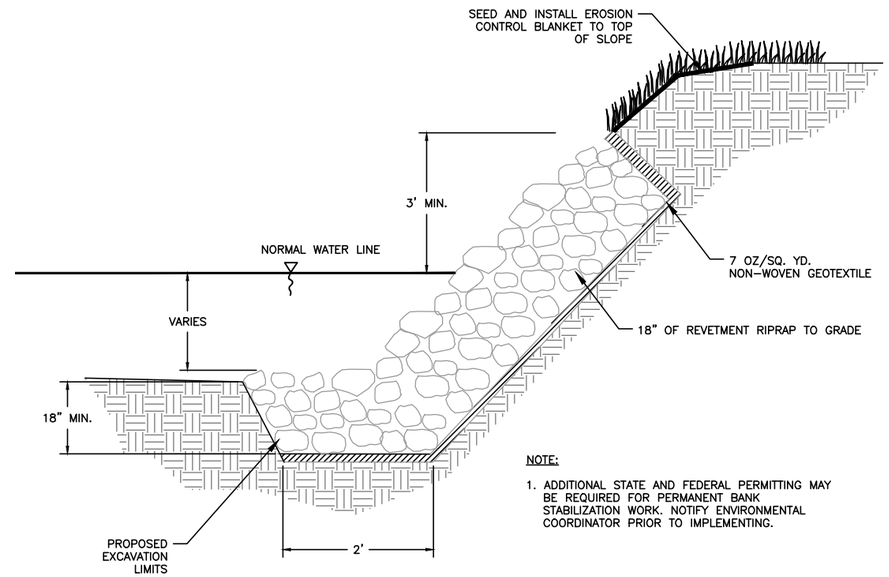

NOTE:

1. ADDITIONAL STATE AND FEDERAL PERMITTING MAY BE REQUIRED FOR PERMANENT BANK STABILIZATION WORK. NOTIFY ENVIRONMENTAL COORDINATOR PRIOR TO IMPLEMENTING.

HARD ARMAMENT BANK STABILIZATION 020

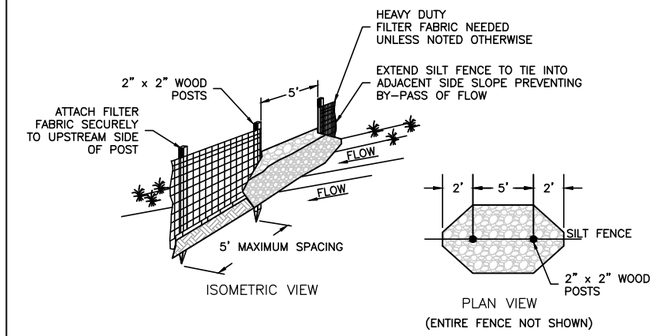

NOTES:

1. SILT FENCE SHALL BE PLACED ON SLOPE CONTOURS TO MAXIMIZE PONDING EFFICIENCY.
2. INSPECT AND REPAIR AFTER EACH STORM EVENT AND REMOVE SEDIMENT WHEN IT REACHES ONE-HALF HEIGHT OF FENCE OR FABRIC STARTS TO BULGE.
3. REMOVED SEDIMENT SHALL BE DEPOSITED TO AN AREA THAT WILL NOT CONTRIBUTE SEDIMENT OFF-SITE AND CAN BE PERMANENTLY STABILIZED.
4. TURN END OF SILT FENCE UP SLOPE TO PREVENT BYPASS FLOW AND ALLOW FOR PONDING.
5. SEE TYPICAL SILT FENCE DETAIL FOR ADDITIONAL INFORMATION.

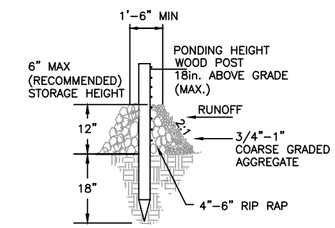

TYPICAL SECTION

SILT FENCE ROCK OUTLET 021

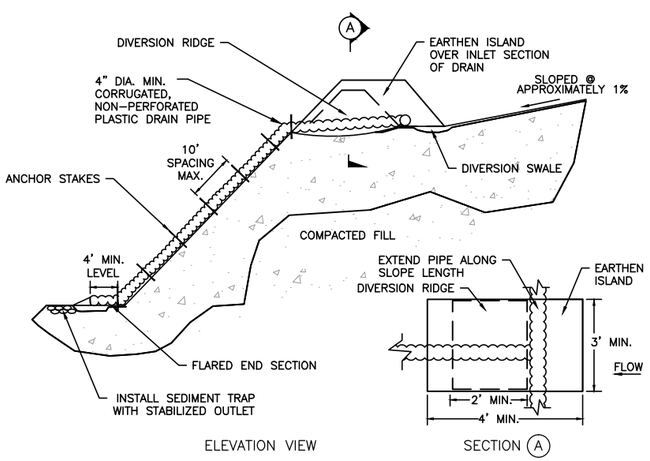

NOTES:

1. THE SLOPE DRAIN SHALL BE CONSTRUCTED/LENGTHENED WITH THE CONSTRUCTION OF THE FILL SLOPE. AS A RESULT, INLET ELEVATIONS WILL VARY ACCORDING TO GRADE ELEVATIONS AT THE TIME OF CONSTRUCTION.
2. INSPECT SLOPE DRAIN AND SUPPORTING DIVERSIONS AFTER EVERY RAINFALL EVENT AND MAKE NECESSARY REPAIRS FOR PROPER OPERATION OF THE SYSTEM.
3. UPON PROJECT COMPLETION, REMOVE THE SLOPE DRAIN AND PROPERLY STABILIZE ALL DISTURBED AREAS.

TEMPORARY SLOPE DRAIN 022

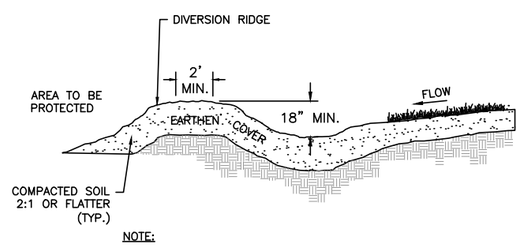

NOTE:

1. SWALE SHALL BE CONSTRUCTED WITH POSITIVE SLOPE ≤ 1% AND OUTLET TO A STABLE VEGETATED AREA OR SEDIMENT TRAP OR BASIN.

DIVERSION SWALE 023

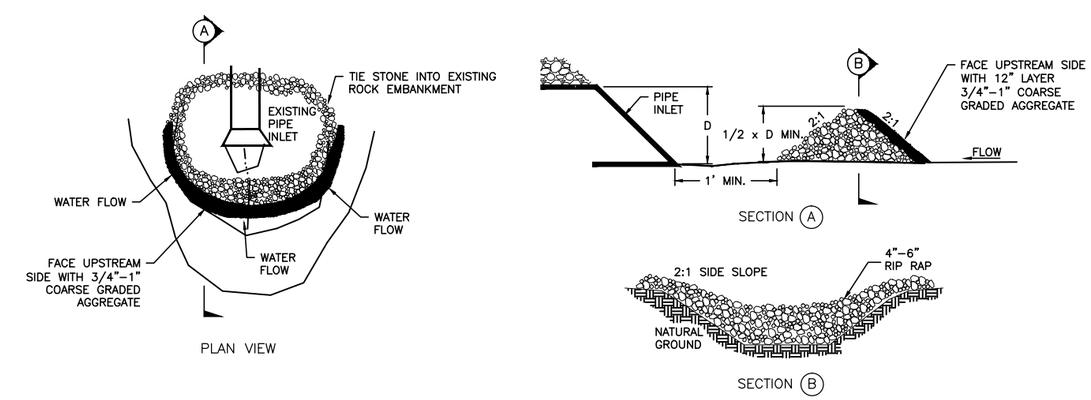

ROCK PIPE INLET PROTECTION 024

REVISIONS			
NO.	DATE	DESCRIPTION	APPROVED BY

DESIGN BY CAM/MRW	DATE 12/18/2015	DUKE ENERGY	STORM WATER POLLUTION PREVENTION PLAN TYPICAL DETAILS
DRAWN BY KTH	JOB NO. – –		
CHECKED BY MRW	APPROVED CAM		

SCALE	N.T.S.
DRAWING NO.	
SHEET 5	OF 5

Z:\Energy\2015\D151525.02 - Duke Energy CAD Detail Sol\CAD\Production Drawings\D150603-00-000-00-C-DETAILS.dwg, 12/18/15 at 3:43 PM, hsymhkt,

Appendix C

Storm Water Evaluation Form for Construction

Storm Water Evaluation Form for Construction

(Complete at least once per week and after each storm event of 0.5 inches or more.)

Project Name: F5484 - 138kV Columbia Substation	**Evaluation Date:**
Construction Supervisor:	**Evaluated By:**
Reason for Evaluation: ☐ **Routine** ☐ **Post Rain Event** ☐ **Non-Routine**	
Location and Phase of Construction:	**Conditions at time of evaluation?** ☐ Dry ☐ Wet ☐ Frozen

OBSERVATIONS	INSTALLED	CORRECTIVE ACTION NEEDED
Silt Fence	☐ Yes ☐ No ☐ N/A	☐ Yes ☐ No
Comment/Action:		
Fiber Rolls/Filter Socks	☐ Yes ☐ No ☐ N/A	☐ Yes ☐ No
Comment/Action:		
Check Dams	☐ Yes ☐ No ☐ N/A	☐ Yes ☐ No
Comment/Action:		
Seeding/Mulching	☐ Yes ☐ No ☐ N/A	☐ Yes ☐ No
Comment/Action:		
Erosion Control Blanket	☐ Yes ☐ No ☐ N/A	☐ Yes ☐ No
Comment/Action:		
Construction Entrances	☐ Yes ☐ No ☐ N/A	☐ Yes ☐ No
Comment/Action:		
Stream Crossings	☐ Yes ☐ No ☐ N/A	☐ Yes ☐ No
Comment/Action:		
Wetland Crossings	☐ Yes ☐ No ☐ N/A	☐ Yes ☐ No
Comment/Action:		
Concrete Washout Areas	☐ Yes ☐ No ☐ N/A	☐ Yes ☐ No
Comment/Action:		

Is sediment or other pollutants leaving the site?	☐ Yes ☐ No	If yes, corrective action is needed.
Is sediment being tracked onto public roadways?	☐ Yes ☐ No	If yes, corrective action is needed.
Have any areas been left disturbed for 21 days or more?	☐ Yes ☐ No	If yes, corrective action is needed.

See Reverse Side for More Information and Additional Space for Comments

Storm Water Evaluation Form for Construction

(Complete at least once per week and after each storm event of 0.5 inches or more.)

General Information:

- This storm water evaluation program is intended to comply with self-monitoring requirements and the project specific Storm Water Pollution Prevention Plan (SWPPP).
- A Storm Water Evaluation is required by a trained individual at a minimum of one (1) time per week and by the end of the next business day following each measurable storm event (total rainfall accumulation equal to one-half (0.5) inches or greater.
- Observed erosion and sediment control deficiencies shall be corrected within 7 days. Modifications to erosion and sediment control structures and/or locations shall be recorded in the SWPPP Amendment Log within 10 days.
- Areas that are scheduled to be inactive for 21 days or more must be temporarily or permanently stabilized with appropriate measures within 7 days of last disturbance.
- Erosion and sediment control structures shall be maintained until a vegetative cover of 70% or greater density in all disturbed, non-agricultural areas is achieved. At which time, all temporary erosion and sediment control structures shall be removed and Notice of Termination (NOT) will be filed with Ohio Environmental Protection Agency (OEPA).
- Completed Evaluation Forms to be submitted to Amanda Sheehe at 1000 East Main Street, Plainfield, IN 46168, (317) 838-2447, Amanda.Sheehe@Duke-Energy.com
- Upon request, Evaluation Forms must be provided to inspecting authorities within 48 hours and must be retained for 3 years after project completion.

Additional Comments/Actions (attach photographs and additional pages as necessary):

Appendix D

SWPPP Amendment Log

SWPPP Amendment Log

Project: F5484 - 138kV Columbia Substation

Date	Description/Location	Initials

Appendix E

Local Reviewing Agency Coordination

From:	Cori Jansing
To:	Charles.Petty@co.warren.oh.us
Subject:	Duke Energy_Columbia Substation Rebuild and Expansion Required Permitting
Date:	Wednesday, July 11, 2018 4:12:00 PM
Attachments:	Duke Energy_Columbia Substation Rebuild and Expansion_Prelim Plans.pdf Duke Energy_Columbia Substation Rebuild and Expansion.pdf image002.png image003.png image004.png image005.png

---

Mr. Petty,

I am working on a ~0.4-mile pole replacement and expansion project on behalf of Duke Energy located in the Village of South Lebanon and Hamilton Township, Warren County, Ohio. Attached is the preliminary project plan set for your review. Duke intends to remove and replace a total of six (6) existing overhead structures with updated steel structures and install two (2) new single pole steel structures associated with construction of the new Columbia Substation. The proposed project spans the Little Miami River however no structures will be located within the 100 YR floodplain of the Little Miami River. There will be no change in land use and no temporary or permanent construction driveways/entrances required as a result of the project. We anticipate submitting a NPDES general permit to the Ohio EPA due to the estimated ~2 acres of disturbance resulting from the project. Can you please let me know if Warren County requires any additional permits based on the parameters I have described and the attached site plans. Specifically, does Warren County require any building, earth moving, or local Stormwater permits?

Please feel free to contact me via email or phone (513)833-6392 if you have any additional questions regarding the proposed project.

Thank you for your help,

Cori

Corrine Jansing
PROJECT SCIENTIST, PWS
CARDNO

Cardno
Shaping the Future

Office +1 513 489 2402 Direct +1 513 233 7034 Mobile +1 513 833 6392
Address 11121 Canal Rd., Cincinnati (Sharonville), Ohio 45241
Email cori.jansing@cardno.com Web www.cardno.com

CONNECT WITH CARDNO

This email and its attachments may contain confidential and/or privileged information for the sole use of the intended recipient(s). All electronically supplied data must be checked against an applicable hardcopy version which shall be the only document which Cardno warrants accuracy. If you are not the intended recipient, any use, distribution or copying of the information contained in this email and its attachments is strictly prohibited. If you have received this email in error, please email the sender by replying to this message and immediately delete and destroy any copies of this email and any attachments. The views or opinions expressed are the author's own and may not reflect the views or opinions of Cardno.

Appendix F

Notice of Termination

Notice of Termination (NOT) of Coverage Under Ohio Environmental Protection Agency General NPDES Permit

Division of Surface Water

(Read accompanying instructions carefully before completing this form.)

Submission of this NOT constitutes notice that the party identified in Section II of this form is no longer authorized to discharge into state waters under the NPDES general permit program. NOTE: All necessary information must be provided on this form. Do not use correction fluid on this form. Forms transmitted by fax will not be accepted. There is no fee associated with submitting this form.

I. Permit Information:

NPDES General Permit Number: OH

Facility General Permit Number:

II. Owner/Applicant Information/Mailing Address

Company (Applicant) Name: Duke Energy

Mailing (Applicant) Address: 1000 E. Main Street

City: Plainfield **State:** Ohio **Zip Code:** 46168 - 8906

Contact Person: Amanda Sheehe **Phone:** (317) 838 - 2447 **Fax:** ( ) -

Contact Email: Amanda.Sheehe@Duke-Energy.com

III. Facility/Site Location Information

Facility Name: F5484 - 138kV Columbia Substation

Facility Address/Location: n/a

City: South Lebanon **State:** Ohio **Zip Code:** 45036 -

County: Warren **Township(s):** 4E3N **Section:** 1

Facility Contact Person: Amanda Sheehe **Phone:** (317) 838 - 2447 **Fax:** ( ) -

Facility Contact Email: Amanda.Sheehe@Duke-Energy.com

IV. Reason for Termination

Transfer of Ownership ☐ Cease to Discharge ☐ Facility Closed ☐

Project Completed ☐ Obtained Individual Permit ☐

V. Certifications

Standard Certification:

I certify under penalty of law that all discharges authorized by the NPDES general permit have been eliminated or that I am no longer the operator of the facility. I understand that by submitting this NOT, I am no longer authorized to discharge under this general permit and that discharging pollutants to waters of the state without an NPDES permit is unlawful under ORC 6111.

Name (typed): **Title:**

Signature: **Date:**

Industrial Storm Water and Coal Mining Activity Certification Only:

I certify under penalty of law that all discharges associated with the identified facility that are authorized by the above referenced NPDES general permit have been eliminated, that I am no longer the operator of the facility, or in the case of a coal mine that the SMCRA bond has been released by ODNR-Division of Reclamation. I understand that by submitting this NOT, I am no longer authorized to discharge storm water associated with industrial activity under this general permit, and that discharging pollutants in storm water associated with industrial activity to waters of the state is unlawful under ORC 6111 where the discharge is not authorized by an NPDES permit.

Name (typed): **Title:**

Signature: **Date:**

Storm Water Construction Activity Certification Only:

For non-residential developments, I certify under penalty of law that, prior to the submittal of this NOT, all elements of the storm water pollution prevention plan have been completed, the disturbed soil at the identified facility have been stabilized and temporary erosion and sediment control measures have been removed at the appropriate time, or all storm water discharges associated with construction activity from the identified facility that are authorized by the above referenced NPDES general permit have otherwise been eliminated.

For residential developments only, I certify under penalty of law that, prior to the submittal of this NOT, either (i) temporary stabilization has been completed and the lot, which includes a home, has been transferred to the homeowner; (ii) final stabilization has been completed and the lot, which does not include a home, has been transferred to the property owner; or (iii) no stabilization has been implemented on a lot, which includes a home, and the lot has been transferred to the homeowner.

I understand that, by submitting this NOT, I am no longer authorized to discharge storm water associated with construction activity by the general permit, and that discharging pollutants in storm water associated with construction activity to waters of the state is unlawful under ORC 6111 where the discharge is not authorized by an NPDES permit.

Name (typed): **Title:**

Signature: **Date:**

Attachment F

Agency Coordination Letters

Office of Real Estate
Paul R. Baldridge, Chief
2045 Morse Road – Bldg. E-2
Columbus, OH 43229
Phone: (614) 265-6649
Fax: (614) 267-4764

September 18, 2018

Cori Jansing
Cardno
11121 Canal Road
Cincinnati, Ohio 45241

Re: 18-852; F5484 kV 138 Columbia Substation Project

Project: The proposed project involves expanding existing line approximately 550 LF to facilitate the construction of the new Columbia Substation in addition to the removal and replacement of approximately 0.4 miles of existing transmission line.

Location: The proposed project is in South Lebanon and Hamilton Townships, Warren County, Ohio.

The Ohio Department of Natural Resources (ODNR) has completed a review of the above referenced project. These comments were generated by an inter-disciplinary review within the Department. These comments have been prepared under the authority of the Fish and Wildlife Coordination Act (48 Stat. 401, as amended; 16 U.S.C. 661 et seq.), the National Environmental Policy Act, the Coastal Zone Management Act, Ohio Revised Code and other applicable laws and regulations. These comments are also based on ODNR's experience as the state natural resource management agency and do not supersede or replace the regulatory authority of any local, state or federal agency nor relieve the applicant of the obligation to comply with any local, state or federal laws or regulations.

Natural Heritage Database: The Natural Heritage Database has the following records at or within a one-mile radius of the project area:

Snuffbox (*Epioblasma triquetra*), E, FE
Fawnsfoot (*Truncilla donaciformis*), T
Mountain madtom (*Noturus eleutherus*), T
Little Miami State Scenic River
Little Miami Scenic State Park – ODNR Division of Parks & Watercraft
Deerfield Gorge Scenic River Lands – ODNR Scenic Rivers Program
City of Lebanon, River Bend Land Co., TEJ Holdings, Taft Broadcast, & Tournament Players Club Scenic Rivers Easements – ODNR Scenic Rivers Program

The review was performed on the project area you specified in your request as well as an additional one-mile radius. Records searched date from 1980. This information is provided to inform you of features present within your project area and vicinity. Additional comments on some of the features may be found in pertinent sections below.

Please note that Ohio has not been completely surveyed and we rely on receiving information from many sources. Therefore, a lack of records for any particular area is not a statement that rare species or unique features are absent from that area. Although all types of plant communities have been surveyed, we only maintain records on the highest quality areas.

Statuses are defined as: E = state endangered; T = state threatened; P = state potentially threatened; SC = state species of concern; SI = state special interest; A = species recently added to state inventory, status not yet determined; X = presumed extirpated in Ohio; FE = federal endangered, FT = federal threatened, FSC = federal species of concern, FC = federal candidate species.

Fish and Wildlife: The Division of Wildlife (DOW) has the following comments.

The DOW recommends that impacts to streams, wetlands and other water resources be avoided and minimized to the fullest extent possible, and that best management practices be utilized to minimize erosion and sedimentation.

The project is within the range of the Indiana bat (*Myotis sodalis*), a state endangered and federally endangered species. The following species of trees have relatively high value as potential Indiana bat roost trees: shagbark hickory (*Carya ovata*), shellbark hickory (*Carya laciniosa*), bitternut hickory (*Carya cordiformis*), black ash (*Fraxinus nigra*), green ash (*Fraxinus pennsylvanica*), white ash (*Fraxinus americana*), shingle oak (*Quercus imbricaria*), northern red oak (*Quercus rubra*), slippery elm (*Ulmus rubra*), American elm (*Ulmus americana*), eastern cottonwood (*Populus deltoides*), silver maple (*Acer saccharinum*), sassafras (*Sassafras albidum*), post oak (*Quercus stellata*), and white oak (*Quercus alba*). Indiana bat roost trees consists of trees that include dead and dying trees with exfoliating bark, crevices, or cavities in upland areas or riparian corridors and living trees with exfoliating bark, cavities, or hollow areas formed from broken branches or tops. However, Indiana bats are also dependent on the forest structure surrounding roost trees. If suitable habitat occurs within the project area, the DOW recommends trees be conserved. If suitable habitat occurs within the project area and trees must be cut, the DOW recommends cutting occur between October 1 and March 31. If suitable trees must be cut during the summer months, the DOW recommends a net survey be conducted between June 1 and August 15, prior to any cutting. Net surveys should incorporate either nine net nights per square 0.5 kilometer of project area, or four net nights per kilometer for linear projects. If no tree removal is proposed, this project is not likely to impact this species.

The project is within the range of the club shell (*Pleurobema clava*), a state endangered and federally endangered mussel, the rayed bean (*Villosa fabalis*), a state endangered and federally endangered mussel, the snuffbox (*Epioblasma triquetra*), a state endangered and federally endangered mussel, the washboard (*Megalonaias* nervosa), a state endangered mussel, the threehorn wartyback (*Obliquaria reflexa*), a state threatened mussel, the black sandshell (*Ligumia recta*), a state threatened mussel, and the fawnsfoot (*Truncilla donaciformis*), a state threatened mussel. The DOW has reviewed this project with the assumption that in-water work within the Little Miami River will not be necessary. Therefore, this project is not likely to impact these or other mussel species.

The project is within the range of the northern brook lamprey *(Ichthyomyzon fossor*), a state endangered fish, the goldeye (*Hiodon alosoides*), a state endangered fish, the mountain brook lamprey (*Ichthyomyzon greeleyi*), a state endangered fish, the bigeye shiner (*Notropis boops*) a state threatened fish, the American eel (*Anguilla rostrata*), a state threatened fish, and the paddlefish (*Polyodon spathula*) a state threatened fish. The DOW recommends no in-water work in perennial streams from April 15 to June 30 to reduce impacts to indigenous aquatic species and

their habitat. If no in-water work is proposed in a perennial stream, this project is not likely to impact these or other aquatic species.

The project is within the range of the eastern massasauga (*Sistrurus catenatus*), a state endangered and federally threatened snake species. The eastern massasauga uses a range of habitats including wet prairies, fens, and other wetlands, as well as drier upland habitat. Due to the location, the type of habitat present at the project site and within the vicinity of the project area, and the type of work proposed, this project is not likely to impact this species.

The project is within the range of the spotted turtle (*Clemmys guttata*), a state threatened species. This species prefers fens, bogs and marshes, but is also known to inhabit wet prairies, meadows, pond edges, wet woods, and the shallow sluggish waters of small streams and ditches. Due to the location, the type of habitat present at the project site and within the vicinity of the project area, and the type of work proposed, this project is not likely to impact this species.

The project is within the range of the Kirtland's snake (*Clonophis kirtlandii*), a state threatened species. This secretive species prefers wet fields and meadows. Due to the location, the type of habitat present at the project site and within the vicinity of the project area, and the type of work proposed, this project is not likely to impact this species.

The project is within the range of the northern harrier (*Circus cyaneus*), a state endangered bird. This is a common migrant and winter species. Nesters are much rarer, although they occasionally breed in large marshes and grasslands. Harriers often nest in loose colonies. The female builds a nest out of sticks on the ground, often on top of a mound. Harriers hunt over grasslands. Due to the location, the type of habitat present at the project site, and the type of work proposed, this project is not likely to impact this species.

The project is within the range of the Sloan's crayfish (*Orconectes sloanii*), a state threatened species. Due to the location, and the habitat within the project area, this project is not likely to impact this species.

Due to the potential of impacts to federally listed species, as well as to state listed species, we recommend that this project be coordinated with the U.S. Fish & Wildlife Service.

Scenic Rivers: The Ohio Scenic Rivers Program has the following comment.

The proposed Duke Energy F5484 kv 138 Columbia Substation expansion project falls within 1,000 of the Little Miami State and National Scenic River in Warren County, Ohio. It crosses the Little Miami State and National Scenic River, the Little Miami State Park and protected conservation land owned and managed by the ODNR Scenic Rivers Program. Scenic Rivers and Park Management staff request that Cardno and Duke Energy schedule a time to meet on site to discuss the project in greater detail, including any potential real estate and mitigation needs, before the project moves forward. Please contact the ODNR regional manager, Melissa Clark at Melissa.clark@dnr.state.oh.us or (937)408-8554.

Water Resources: The Division of Water Resources has the following comment.

The local floodplain administrator should be contacted concerning the possible need for any floodplain permits or approvals for this project. Your local floodplain administrator contact information can be found at the website below.

http://water.ohiodnr.gov/portals/soilwater/pdf/floodplain/Floodplain%20Manager%20Community%20Contact%20List_8_16.pdf

ODNR appreciates the opportunity to provide these comments. Please contact John Kessler at (614) 265-6621 if you have questions about these comments or need additional information.

John Kessler
ODNR Office of Real Estate
2045 Morse Road, Building E-2
Columbus, Ohio 43229-6693
John.Kessler@dnr.state.oh.us

From:	Cori Jansing
To:	Danielle Thompson
Subject:	FW: Cardno - F5484 Columbia Substation Expansion 138 kV Project, Warren County
Date:	Monday, September 24, 2018 6:35:04 AM
Attachments:	image001.jpg image002.jpg

Corrine Jansing
PROJECT SCIENTIST
CARDNO

Office +1 513 489 2402 Direct +1 513 233 7034 Mobile +1 513 833 6392
Address 11121 Canal Rd., Cincinnati (Sharonville), Ohio 45241
Email cori.jansing@cardno.com Web www.cardno.com

This email and its attachments may contain confidential and/or privileged information for the sole use of the intended recipient(s). All electronically supplied data must be checked against an applicable hardcopy version which shall be the only document which Cardno warrants accuracy. If you are not the intended recipient, any use, distribution or copying of the information contained in this email and its attachments is strictly prohibited. If you have received this email in error, please email the sender by replying to this message and immediately delete and destroy any copies of this email and any attachments. The views or opinions expressed are the author's own and may not reflect the views or opinions of Cardno.

From: susan_zimmermann@fws.gov <susan_zimmermann@fws.gov> **On Behalf Of** Ohio, FW3
Sent: Monday, July 23, 2018 8:50 AM
To: Cori Jansing <cori.jansing@cardno.com>
Subject: Cardno - F5484 Columbia Substation Expansion 138 kV Project, Warren County

TAILS# 03E15000-2018-TA-1693

Dear Ms. Jansing,

We have received your recent correspondence regarding potential impacts to federally listed species in the vicinity of the above referenced project. There are no federal wilderness areas, wildlife refuges or designated critical habitat within the vicinity of the project area. We recommend that proposed activities minimize water quality impacts, including fill in streams and wetlands. Best management practices should be utilized to minimize erosion and sedimentation.

FEDERALLY LISTED, PROPOSED, AND CANDIDATE SPECIES COMMENTS: Due to the project type, size, location, and the proposed implementation of seasonal tree cutting (clearing of trees =3 inches diameter at breast height between October 1 and March 31) to avoid impacts to the federally listed endangered Indiana bat (*Myotis sodalis*) and threatened northern long-eared bat (*Myotis septentrionalis*), we do not anticipate adverse effects to any federally endangered, threatened, proposed or candidate species. Should the project design change, or during the term of this action, additional information on listed or proposed species or their critical habitat become available, or if new information reveals effects of the action that were not previously considered, consultation with the U.S. Fish and Wildlife Service (Service) should be initiated to assess any potential impacts.

If there is a federal nexus for the project (e.g., federal funding provided, federal permits required to construct), no tree clearing should occur on any portion of the project area until consultation under section 7 of the Endangered Species Act (ESA), between the Service and the federal action agency, is completed. We recommend that the federal action agency submit a determination of effects to this office, relative to the Indiana bat and northern long-eared bat, for our review and concurrence.

These comments have been prepared under the authority of the Fish and Wildlife Coordination Act (48 Stat. 401, as amended; 16 U.S.C. 661 et seq.), ESA, and are consistent with the intent of the National Environmental Policy Act of 1969 and the Service's Mitigation Policy. This letter provides technical assistance only and does not serve as a completed section 7 consultation document. We recommend that the project be coordinated with the Ohio Department of Natural Resources due to the potential for the project to affect state listed species and/or state lands. Contact John Kessler, Environmental Services Administrator, at (614) 265-6621 or at john.kessler@dnr.state.oh.us.

If you have questions, or if we can be of further assistance in this matter, please contact our office at (614) 416-8993 or ohio@fws.gov.

Sincerely,

Scott Pruitt
Acting Field Supervisor

Attachment G

Regulated Waters Delineation Report

Regulated Waters Delineation Report

F5484 138kV Columbia Substation

Warren County, Ohio

July 20, 2018

Cardno®
Shaping the Future

Document Information

Prepared for	Duke Energy
Client Contact	Amanda Sheehe
Project Name	F5484 138kV Columbia Substation
Project Number	Cardno #J156720M59
	Duke #G4462
Project Manager	Cori Jansing (Cardno)
Date	October 2, 2018

Prepared for:

Duke Energy
1000 East Main Street, Plainfield, Indiana 46168

Prepared by:

Cardno
11121 Canal Road, Cincinnati, Ohio 45241

Table of Contents

1 Introduction 1

2 Regulatory Definitions 1

2.1 Waters of the United States 1
2.2 Waters of the State 3
2.3 Wetlands 3
2.4 Streams, Rivers, Watercourses & Jurisdictional Ditches 6
2.5 Endangered Species Act 6

3 Background Information 6

3.1 Existing Maps 6

4 Methodology and Description 7

4.1 Regulated Waters Investigation 7
4.2 Technical Descriptions 8
4.3 Endangered, Threatened and Rare Species 10

5 Jurisdictional Analysis 11

5.1 U.S. Army Corps of Engineers 11
5.2 Ohio Environmental Protection Agency 11

6 Summary and Conclusion 12

6.1 Summary 12
6.2 Conclusion 13

7 References 14

Appendices

Appendix A Site Photographs

Appendix B Ohio Primary Headwater Habitat Evaluation Index (HHEI) Forms

Appendix C Ohio Rapid Assessment Method 5.0 Forms and USACE Wetland Delineation Data Sheets

Appendix D Endangered, Threatened, and Rare Species Agency Coordination

Tables

Table 1-1 PLSS within the F5484 – 138kV Columbia Substation Project Area..... 1

Table 6-1 Features Identified within the 5484 – 138kV Columbia Substation Project Survey Area..... 12

Figures

Figure 1 Project Location Map

Figure 2 National Wetland Inventory (NWI) Map

Figure 3 Soil Survey Map

Figure 4 Waters of the U.S. Delineation Map

Acronyms

APA	Administrative Procedure Act
BF	Bank Full
CFR	Code of Federal Regulations
CWA	Clean Water Act
DBH	Diameter at Breast Height
DP	Data Point
EPA	U.S. Environmental Protection Agency
ETR	Endangered, Threatened, and Rare
FAC	Facultative Plant
FACU	Facultative Upland Plant
FACW	Facultative Wetland Plant
FEMA	Federal Emergency Management Agency
FIRM	Flood Insurance Rate Map
GIS	Geographical Information SystemAcronyms, continued
MS4	Municipal Separate Storm Water Sewer Systems
NHD	National Hydrography Dataset

NPDES	National Pollutant Discharge Elimination System
NRCS	U.S. Department of Agriculture Natural Resources Conservation Service
NWP	Nationwide Permit
NWPL	National Wetland Plant List
OBL	Obligate Wetland Plant
OEPA	Ohio Environmental Protection Agency
ODNR	Ohio Department of Natural Resources
OHWM	Ordinary High Water Mark
PEM	Palustrine Emergent Wetland
PFO	Palustrine Forested Wetland
PLSS	Public Land Survey Section
PSS	Palustrine Shrub Scrub Wetland
RGP	Regional General Permit
SNE	Significant Nexus
SWANCC	Solid Waste Agency of Northern Cook County
TNW	Traditional Navigable Water
TOB	Top of Bank
UPL	Upland Plant
USDA	U.S. Department of Agriculture
USGS	U.S. Geological Survey
USACE	U.S. Army Corps of Engineers
USFWS	U.S. Fish and Wildlife Service
WOTUS	Waters of the United States
WQC	Water Quality Certification

1 Introduction

Cardno was contracted to perform a water resource inventory, including wetlands and streams, which are located at the F5484 – 138kV Columbia Substation Project Area and potential access points (total Survey Area) in South Lebanon, Hamilton Township, Warren County, Ohio. The field work for this task was performed on July 5, 2018. Table 1-1 summarizes the location of the Survey Area based on the Public Land Survey Section (PLSS) data (note the PLSS system is present in the northern portion of the Survey Area, but the southern portion of the Survey Area falls outside the area the PLSS was conducted in Ohio).

Table 1-1 PLSS within the F5484 – 138kV Columbia Substation Project Area

Township	Range	Section
4E	3N	1

The total size of the Project Area was approximately 5.7 acres and the total size of the Survey Area was approximately 11.7 acres. The Survey Area consisted of five habitats; urban/industrial turf, maintained right-of-way, palustrine emergent wetland, palustrine forested wetland, and secondary growth forest.

This report identifies the jurisdictional status of aquatic features identified within the Survey Area based on Cardno's best professional understanding and interpretation of the *Corps of Engineers' Wetland Delineation Manual* (Environmental Laboratory, 1987) and U.S. Army Corps of Engineers' (USACE) guidance documents and regulations. Jurisdictional determinations for other "waters of the U.S." were made based on definitions and guidance found in 33 CFR 328.3, USACE Regulatory Guidance Letters, and the wetland delineation manual. The USACE administers Section 404 of the Clean Water Act (CWA), which regulates the discharge of fill or dredged material into all "waters of the U.S.," and is the regulatory authority that must make the final determination as to the jurisdictional status of the Survey Area.

2 Regulatory Definitions

2.1 Waters of the United States

"Waters of the U.S." are within the jurisdiction of the USACE under the CWA. "Waters of the U.S." is a broad term, which includes waters that are used or could be used for interstate commerce. This includes wetlands, ponds, lakes, territorial seas, rivers, tributary streams including any definable intermittent waterways, and some ditches below the ordinary high water mark (OHWM). Also included are manmade water bodies such as quarries and ponds, which are no longer actively being mined or constructed and are connected to other "waters". Wetlands, mudflats, vegetated shallows, riffle and pool complexes, coral reefs, sanctuaries, and refuges are all considered special aquatic sites which involve more rigorous regulatory permitting requirements. A specific, detailed definition of "waters of the U.S." can be found in the Federal Register (33 CFR 328.3).

On January 9, 2001, the U.S. Supreme Court issued a decision, Solid Waste Agency of Northern Cook County (SWANCC) v. U.S. Army Corps of Engineers (No. 99-1178). The decision reduced

the regulation of isolated wetlands under Section 404 of the CWA, which assigned the USACE authority to issue permits for the discharge of dredge or fill material into "waters of the U.S.". Prior to the SWANCC decision, the USACE had adopted a regulatory definition of "waters of the U.S." that afforded federal protection for almost all of the nation's wetlands. The Supreme Court decision interpreted that the USACE's jurisdiction was restricted to navigable waters, their tributaries, and wetlands that are adjacent to these navigable waterways and tributaries. The decision leaves the majority of "isolated" wetlands unregulated by the CWA. Therefore, most wetlands that are not adjacent to, or contiguous with, any other "waters of the U.S." via a surface drain such as a swale, ditch, or stream are considered isolated and thus no longer jurisdictional by the USACE.

On June 19, 2006, the U.S. Supreme Court issued decisions in regards to John A. Rapanos v. United States (No. 04-1034) and June Carabell v. United States (04-1384), et al. The plurality decision created two 'tests' for determining CWA jurisdiction: the permanent flow of water test (set out by Justice Scalia) and the "significant nexus" test (set out by Justice Kennedy). On June 5, 2007 the USACE and U.S. Environmental Protection Agency (EPA) issued joint guidance on how to interpret and apply the Court's ruling. According to this guidance, the USACE will assert jurisdiction over traditionally navigable waters, adjacent wetlands, and non-navigable tributaries of traditionally navigable waters that have "relatively permanent" flow, and wetlands that border these waters, regardless of whether or not they are separated by roads, berms, and similar barriers. In addition, the USACE will use a case-by-case "significant nexus" analysis to determine whether waters and their adjacent wetlands are jurisdictional. A "significant nexus" can be found where waters, including adjacent wetlands, alter the physical, biological, or chemical integrity of the traditionally navigable water based on consideration of several factors.

In January 2015 an EPA sponsored publication, *Connectivity of Streams & Wetlands to Downstream Waters: A Review & Synthesis of the Scientific Evidence* (EPA, 2015), emphasized how streams, nontidal wetlands, and open waters in and outside of riparian areas and floodplains effect downstream waters such as rivers, lakes, estuaries, and oceans.

On May 27, 2015 the EPA released a statement that a new Clean Water Rule typically referred to as, "The Waters of the United States (WOTUS) Rule" was finalized and that it would "not create any new permitting requirements and maintains all previous exemptions and exclusions" (epa.gov). The rule would only protect waters that have historically been covered by the Clean Water Act. The intent was to clearly define:

- Jurisdictional limits of tributaries of navigable waterways;
- Set boundaries on covering nearby waters;
- Identify specific national water treasures by name (prairie potholes, etc.);
- Clearly define when a ditch is jurisdictional, and when it is not;
- Maintain status that waters within Municipal Separate Storm Water Sewer Systems (MS4) are not jurisdictional; and
- Reduce the use of case-specific analysis of waters.

Also on May 27, 2015 a publication, *Technical Support Document for the Clean Water Rule: Definition of Waters of the United States* (EPA, 2105), was released discussing in detail why the significant nexus (SNE) between one water and another is important. It specifically ties distances to the various types of waters mentioned within the Code of Federal Regulations [33 CFR 328.3(a)(1) through (a)(8)]. For example, the document states "Waters located within the 100-year floodplain of a traditional navigable water, interstate water, or the territorial seas and waters

located more than 1,500 feet and less than 4,000 feet from the lateral limit of an (a)(1) or (a)(3) water may still be determined to have a significant nexus on a case-specific basis under paragraph (a)(8) of the rule and, thus, be a "water of the United States" (EPA 2015).

On June 29, 2015 the new Clean Water Rule was entered into the Federal Register (40 CFR Parts 110, 112, 116, et al. Clean Water Rule: Definition of ''waters of the United States''; Final Rule). This report will refer to this rule as "June 29, 2015 WOTUS Rule". This rule includes exact distances mentioned in the May 27, 2015 Technical Support Document as it relates to adjacent waters, including the following:

- Waters within 100 ft. of jurisdictional waters;
- Waters within the 100-year floodplain to a maximum of 1,500 feet from the ordinary high water mark (OHWM);
- Waters within the 100-year floodplain with a SNE to the Traditional Navigable Water (TNW); and
- Waters with a SNE within 4,000 ft. of jurisdictional waters.

On October 9, 2015 the U.S. Court of Appeals for the Sixth Circuit (Court) issued a nationwide stay against the enforcement of the June 29, 2015 WOTUS Rule. The Court stated, "…we conclude that…Justice Kennedy's opinion in *Rapanos* represents the best instruction on the permissible parameters of "waters of the United States" as used in the Clean Water Act, it is far from clear that the new Rule's distance limitations are harmonious with the instruction.

Moreover, the Court stated that the rulemaking process by which the distance limitations were adopted is facially suspect. Petitioners contend the proposed rule that was published, on which interested persons were invited to comment, did not include any proposed distance limitations in its use of terms like "adjacent waters" and "significant nexus." Consequently, petitioners contend, the Final Rule cannot be considered a "logical outgrowth" of the rule proposed, as required to satisfy the notice-and-comment requirements of the APA, 5 U.S.C. § 553. As a further consequence of this defect, petitioners contend, the record compiled by respondents is devoid of specific scientific support for the distance limitations that were included in the Final Rule. They contend the Rule is therefore not the product of reasoned decision-making and is vulnerable to attack as impermissibly "arbitrary or capricious" under the APA, 5 U.S.C. § 706(2)."

Until further notice, the June 29, 2015 WOTUS Rule is not in effect. Furthermore, this report does not attempt to include a professional opinion as it relates to the June 29, 2015 WOTUS Rule.

2.2 Waters of the State

"Waters of the State" are within the jurisdiction of the Ohio Environmental Protection Agency (OEPA). They are generally defined as surface and underground water bodies, which extend through or exist wholly in the State of Ohio, which includes, but is not limited to, streams and both isolated and non-isolated wetlands. Private ponds, or any pond, reservoir, or facility built for reduction of pollutants prior to discharge are not included in this definition. In addition to "waters of the U.S.", OEPA also regulates and issues permits for isolated wetland impacts.

OEPA relies on the USACE decision regarding wetland determinations and delineations including whether or not a wetland is isolated or non-isolated.

2.3 Wetlands

Wetlands are a category of "waters of the U.S." for which a specific identification methodology has been developed. As described in detail in the *Corps of Engineers Wetland Delineation*

Manual (Environmental Laboratory, 1987), wetland boundaries are delineated using three criteria: hydrophytic vegetation, hydric soils, and wetland hydrology. In addition to the criteria defined in the 1987 Manual, the procedures described in the *Regional Supplement to the Corps of Engineers Wetland Delineation Manual: Midwest Region* (Environmental Laboratory, 2010) were used to evaluate the Survey Area for the presence of wetlands.

2.3.1 Hydrophytic Vegetation

On June 1, 2012, the National Wetland Plant List (NWPL), formerly called the National List of Plant Species that Occur in Wetlands (Reed 1988), went into effect after being released by the U.S. Army Corps of Engineers (USACE) as part of an interagency effort with the U.S. Fish and Wildlife Service (USFWS), the U.S. Environmental Protection Agency (EPA), and the U.S. Department of Agriculture (USDA) Natural Resources Conservation Service (NRCS) (Lichvar and Kartesz, 2009). The NWPL, along with the information implied by its wetland plant species status ratings, provides general botanical information about wetland plants and is used extensively in wetland delineation, restoration, and mitigation efforts. The NWPL consists of a comprehensive list of wetland plant species that occur within the United States along with their respective wetland indicator statuses by region. An indicator status reflects the likelihood that a particular plant species occurs in a wetland or upland (Lichvar et al. 2012). Definitions of the five indicator categories are presented below.

> **OBL** (Obligate Wetland Plants): almost always occur in wetlands. With few exceptions, these plants (herbaceous or woody) are found in standing water or seasonally saturated soils (14 or more consecutive days) near the surface. These plants are of four types: submerged, floating, floating-leaved, and emergent.
>
> **FACW** (Facultative Wetland Plants): usually occur in wetlands, but may occur in non-wetlands. These plants predominately occur with hydric soils, often in geomorphic settings where water saturates the soils or floods the soil surface at least seasonally.
>
> **FAC** (Facultative Plants): occur in wetlands and non-wetlands. These plants can grow in hydric, mesic, or xeric habitats. The occurrence of these plants in different habitats represents responses to a variety of environmental variables other than just hydrology, such as shade tolerance, soil pH, and elevation, and they have a wide tolerance of soil moisture conditions.
>
> **FACU** (Facultative Upland Plants): usually occur in non-wetlands, but may occur in wetlands. These plants predominately occur on drier or more mesic sites in geomorphic settings where water rarely saturates the soils or floods the soil surface seasonally.
>
> **UPL** (Upland Plants): almost never occur in wetlands. These plants occupy mesic to xeric non-wetland habitats. They almost never occur in standing water or saturated soils. Typical growth forms include herbaceous, shrubs, woody vines, and trees.

According to the USACE's Midwest Regional Supplement, plants that are rated as FAC, FACW, or OBL are classified as wetland plant species. The percentage of dominant wetland species in each of the four vegetation strata (tree, shrub/sapling, herbaceous, and woody vine) in the sample area determines the hydrophytic (wetland) status of the plant community. Dominant species are chosen independently from each stratum of the community. In general, dominants are the most

abundant species that individually or collectively account for more than 50 percent of the total coverage of vegetation in the stratum, plus any other species that, by itself, accounts for at least 20 percent of the total.

For the purposes of determining dominant plant species, the four vegetation strata are defined. Trees consist of woody species 3 inches or greater in diameter at breast height (DBH). Shrubs and saplings are woody species that are over 1 meter in height and less than 3 inches DBH. Herbaceous species consist of all herbaceous (non-woody) plants, including herbaceous vines, regardless of size, and woody plants less than 1 meter tall. Woody vines consist of vine species greater than 1 meter in height, such as wild grapes.

2.3.2 Hydric Soils

Hydric soils are defined as soils that are saturated, flooded, or ponded long enough during the growing season to develop anaerobic conditions in the upper part. In general, hydric soils are flooded, ponded, or saturated for a week or more during the growing season when soil temperatures are above 32 degrees Fahrenheit. The anaerobic conditions created by repeated or prolonged saturation or flooding result in permanent changes in soil color and chemistry, which are used to differentiate hydric from non-hydric soils.

In this report, soil colors are described using the Munsell notation system. This method of describing soil color consists of separate notations for hue, value, and chroma that are combined in that order to form the color designation. The hue notation of a color indicates its relation to red, yellow, green, blue, and purple; the value notation indicates its lightness, and the chroma notation indicates its strength or departure from a neutral of the same lightness.

The symbol for hue consists of a number from 1 to 10, followed by the letter abbreviation of the color. Within each letter range, the hue becomes more yellow and less red as the numbers increase. The notation for value consists of numbers from 0 for absolute black, to 10 for absolute white. The notation for chroma consists of numbers beginning with /0 for neutral grays and increasing at equal intervals. A soil described as 10YR 3/1 soil is more gray than a soil designated 10YR 3/6.

2.3.3 Wetland Hydrology

Wetland hydrology is defined as the presence of water for a significant period of time at or near the surface (within the root zone) during the growing season. Wetland hydrology is present only seasonally in many cases, and is often inferred by indirect evidence. Hydrology is controlled by such factors as seasonal and long-term rainfall patterns, local geology and topography, soil type, local water table conditions, and drainage. Primary indicators of hydrology are inundation, soil saturation in the upper 12 inches of the soil, watermarks, sediment deposits, and drainage patterns. Secondary indicators such as oxidized root channels in the upper 12 inches of the soil, water-stained leaves, local soil survey data, and the FAC-neutral vegetation test are sometimes used to identify hydrology. A primary indicator or two or more secondary indicators are required to establish a positive indication of hydrology.

2.3.4 Wetland Definition Summary

In general, an area must meet all three criteria to be classified as a wetland. In certain problem areas such as seasonal wetlands, which are not wet at all times, or in recently disturbed (atypical) situations, areas may be considered a wetland if only two criteria are met. In special situations, an area that meets the wetland definition may not be within the USACE's jurisdiction due to a specific regulatory exemption.

2.4 Streams, Rivers, Watercourses & Jurisdictional Ditches

With non-tidal waters, in the absence of adjacent wetlands, the extent of the USACE's jurisdiction is defined by the OHWM. USACE regulations define the term "ordinary high water mark" for purposes of the CWA lateral jurisdiction at 33 CFR 328.3(e), which states:

> The term ordinary high water mark means that line on the shore established by the fluctuations of water and indicated by physical characteristics such as a clear, natural line impressed on the bank, shelving, changes in the character of soil, destruction of terrestrial vegetation, the presence of litter and debris, or other appropriate means that consider the characteristics of the surrounding areas.

Streams, rivers, watercourse, and ditches within the Survey Area were evaluated using the above definition and documented. Waterways that did exhibit an OHWM were recorded and evaluated using the Ohio Environmental Protection Agency's Primary Headwater Habitat Evaluation (HHEI) or Qualitative Habitat Evaluation Index (QHEI) methodology. If applicable, the results of the HHEI and/or QHEI are presented in Section 3.2, Technical Descriptions and datasheets are provided in the Appendix B.

2.5 Endangered Species Act

Endangered, Threatened, and rare (ETR) species are protected at both the state and federal level (ORC 1531.25 and 50 CFR 17.11 through 17.12, respectively). The Ohio Revised Code defines "Take" as to harass, hunt, capture, or kill; or attempt to harass, hunt, capture, or kill.

The USFWS, under authority of the Endangered Species Act of 1973 (16 U.S. Code 1531), as amended, has the responsibility for federally listed species. The Ohio Department of Natural Resources (ODNR) has the responsibility for state listed species.

3 Background Information

3.1 Existing Maps

Several sources of information were consulted to identify potential wetlands and wetland soil units on the site. These include the USFWS's *National Wetland Inventory* (NWI), the USGS's *National Hydrography Dataset* (NHD), and the Natural Resources Conservation Service's (NRCS) *Soil Survey* for this county. These maps identify potential wetlands and wetland soil units on the site. The NHD maps are used to portray surface water. The NWI maps were prepared from high altitude photography and in most cases were not field checked. Because of this, wetlands are sometimes erroneously identified, missed, or misidentified. Additionally, the criteria used in identifying these wetlands were different from those currently used by the USACE. The county soil maps, on the other hand, were developed from actual field investigations. However, they address only one of the three required wetland criteria and may reflect historical conditions rather than current site conditions. The resolution of the soil maps limits their accuracy as well. The mapping units are often generalized based on topography and many mapping units contain inclusions of other soil types for up to 15 percent of the area of the unit. The USACE does not accept the use of either of these maps to make wetland determinations.

3.1.1 National Wetland Inventory

The NWI map of the area (Figure 2) identified mapped three (3) wetland features including one R2UBH, one PFO1A, and one PFO1C within the Survey Area.

3.1.2 Soil Survey

The NRCS Soil Survey identified 9 soil series located within the Survey Area (Figure 3). The following table identifies the soil unit symbol, soil unit name, and whether or not the soil type contains components that meet the hydric soil criteria.

Table 3 – 2 Soil Map Units within the F5484 – 138kV Columbia Substation Survey Area

Symbol	Description	Hydric
CnB	Cincinnati silt loam, 2 to 6 percent slopes	N
CnC2	Cincinnati silt loam, 6 to 12 percent slopes	Y
EdF2	Eden complex, 25 to 35 percent slopes, moderately eroded	N
FaF2	Fairmount-Eden flaggy silty clay loams, 25 to 50 percent slopes, moderately eroded	N
FlB	Fox loam, 2 to 6 percent slopes	N
FlC2	Fox loam. 6 to 12 percent slopes, moderately eroded	N
Gd	Genesee fine sandy loam	N
Gn	Genesee loam	Y
Rh	Riverwash	N
W	Water	N

4 Methodology and Description

4.1 Regulated Waters Investigation

The delineation of regulated waters within the Survey Area was based on the methodology described in the *Corps of Engineers Wetland Delineation Manual* (Environmental Laboratory, 1987) and the *Regional Supplement to the Corps of Engineers Wetland Delineation Manual: Midwest Region* (Environmental Laboratory, 2010) as required by current USACE policy.

Prior to the field work, the background information was reviewed to establish the probability and potential location of wetlands on the site. Next, a general reconnaissance of the Survey Area was conducted to determine site conditions. The site was then walked with the specific intent of determining wetland boundaries. Data stations were established at locations within and near the wetland areas to document soil characteristics, evidence of hydrology and dominant vegetation. Note that no attempt was made to examine a full soil profile to confirm any soil series designations. However, when possible, soils were examined to a depth of at least 16 inches to assess soil characteristics and site hydrology. Complete descriptions of typical soil series can be found in the soil survey for these counties.

4.1.1 Site Photographs.

Photographs of the site are located in Appendix A. These photographs are the visual documentation of site conditions at the time of inspection. The photographs are intended to provide representative visual samples of any wetlands or other special features found on the site.

4.1.2 Delineation Data Sheets.

Where stations represent a wetland boundary point they are presented as paired data points (dp), one each documenting the wetland and upland sides of the wetland boundary. These forms are the written documentation of how representative sample stations met or did not meet each of the wetland criteria. For plant species included on the National Wetlands Plant List, nomenclature will follow their lead. For all other plants not listed in the NWPL, nomenclature will follow the USDA's Plants Database. Wetland data sheets can be found in Appendix C.

4.2 Technical Descriptions

Complete stream field data sheets from the site investigation are located in Appendix B and wetland field data sheets are located in Appendix C for the Duke Energy – 5484 138 kV Columbia Substation. The project included the review of a 100-ft wide survey corridor approximately 0.95 miles long (the "Survey Area"), located in South Lebanon and Hamilton Township, Warren County, Ohio (see Figure 1). The Survey Area consists of approximately 11.7 acres, with an actual project earth disturbance potential of approximately 1.8 acres (based on a 20-foot wide vehicular path for 0.75 miles of proposed off-road construction access routes). The F5484 – 138kV Columbia Substation project initiates at Duke Energy Structure 163 (39.3709, -84.2266) located north of the Little Miami River (Stream 2), south of Mason Morrow Millgrove Road (CR 38), and west of State Route 48 and terminates at Duke Energy Structure 155 (39.3658, -84.2236) located south of the Little Miami River, north of Dwire Road (CR 149), west of State Route 48, and east of Water Stone Lane. The Survey Area consisted of five habitats: urban/industrial turf, maintained right-of-way, palustrine emergent wetland, palustrine forested wetland, and secondary growth forest.

4.2.1 Wetland and Stream Descriptions

Stream 1 (UNT to the Little Miami River) (75 linear feet within the study area)

Stream 1 was an ephemeral stream that flowed east through the project study area. Stream 1 had a natural channel; no modifications were observed within the survey reach. Both banks had a narrow width (less than fifteen feet) riparian corridor, with the floodplain land use predominantly residential, park, or new field. The stream had low sinuosity, with a half S-curve observed within the one hundred foot survey reach. The stream had a moderate to severe gradient, with a drop between two feet and ten feet every hundred feet. This stream is a designated Warmwater Habitat (WWH). This stream was at dry conditions at the time of the stream survey. The turbidity levels were not elevated at the time of survey. There was an estimated 0% canopy coverage for the surveyed stream reach at the time of survey. The dominant substrates were gravel and silt. Ordinary High Water Mark (OHWM) was 1.5 feet and depth was 0.75 foot. Bank Full width was two (2) feet and depth was one (1) foot. The maximum pool depth observed was less than two (2) inches. Stream 1 flows into the Little Miami River, a Traditional Navigable Water (TNW). Due to this connection, this stream should be considered a jurisdictional water of the United States. The HHEI score for Stream 1 was 26.

Stream 2 (The Little Miami River) (0.43 acres within the Survey Area)

Stream 2 was a perennial USGS-the Little Miami River. An Ohio EPA study of the Lower Little Miami River in 2007 found that at river mile 32.9 (St Rt. 48, within 200 meters of the Survey Area) was classified as

Exceptional Warm Water Habitat, with an ICI score of 54 and an IBI score of 52 (OEPA, 2009). Stream 2 is a TNW and should be considered a jurisdictional water of the United States.

Stream 3 (UNT to the Little Miami River) (75 linear feet within the Survey Area)

Stream 3 was an intermittent stream that flowed east through the survey study area. Stream 3 has been previously modified within the survey reach as it is located within ROW for both overhead power lines and underground utilities. Both banks had a narrow width (less than fifteen feet) riparian corridor, with the floodplain land use predominantly residential, park, or new field. The stream had low sinuosity, with a half S-curve observed within the two hundred foot survey reach. The stream had a moderate to severe gradient, with a drop between two feet and ten feet every hundred feet. This stream was at base flow conditions at the time of the stream survey. The turbidity levels were not elevated at the time of survey. There was an estimated 0% canopy coverage for the surveyed stream reach at the time of survey. The dominant substrates were boulder (rip rap) and silt. OHWM width was two (2) feet and depth was 0.75 foot. Bank Full width was two (2) feet and depth was one (1) foot. The maximum pool depth observed was between four (4) and twelve (12) inches. Stream 3 flows into the Little Miami River, a TNW. Due to this connection, this stream should be considered a jurisdictional water of the United States. The HHEI score for Stream 3 was 53.

Stream 4 (UNT to the Little Miami River) (75 linear feet within the Survey Area)

Stream 4 was an intermittent stream that flowed east through the survey study area. Stream 4 was considered to be recovering from past modifications as it is located within ROW for both overhead power lines and underground utilities. Both banks had a narrow width (less than fifteen feet) riparian corridor, with the floodplain land use predominantly residential, park, or new field. The stream had low sinuosity, with a half S-curve observed within the two hundred foot survey reach. The stream had a severe gradient, with a drop of ten (10) feet or greater every hundred feet. This stream was at base flow conditions at the time of the stream survey. The turbidity levels were not elevated at the time of survey. There was an estimated 0% canopy coverage for the surveyed stream reach at the time of survey. The dominant substrates were boulder (rip rap) and silt. OHWM width was five (5) feet and depth was one (1) foot. Bank Full width was seven (7) feet and depth was 1.5 feet. The maximum pool depth observed was between four (4) and twelve (12) inches. Stream 4 flows into Little Miami River, a TNW. Due to this connection, this stream should be considered a jurisdictional water of the United States. The HHEI score for Stream 4 was 67.

Wetland 1 (Palustrine Forested Wetland) (0.08 acres within the Survey Area)

Wetland 1 was a palustrine forested wetland located near Stream 2 (USGS- the Little Miami River). This wetland appeared to be hydraulically connected to a jurisdictional water of the United States. The ORAM score for Wetland 1 was 54, categorizing the wetland as a category 2, or moderate quality, wetland.

Data Point 1 (DP1) – Wetland Data Point

Dominant vegetation in the vicinity of Data Point 1 included Reed Canary Grass *(Phalaris arundinacea*, FACW), and Eurasian-Buttercup (*Ficaria verna*, FAC). In addition, non-dominant vegetation observed included Spotted Touch-Me-Not (*Impatiens capensis*, FACW), Frank's Sedge (*Carex frankii*, OBL), and Eastern Poison Ivy (*Toxicodendron radicans*, FAC). The plants at this data point qualified as hydrophytic vegetation. The soil from 0-16" had a matrix soil color of 10YR 4/2 with concentrations in the matrix at 10%, and a texture of Sandy Loam. The soil at the data point was mapped as Riverwash, and met the Depleted Matrix (F3), and Redox Depressions (F8) hydric soil criteria. Primary indicators of hydrology included Surface Water (A1), Water Marks (B1), Sediment Deposits (B2), and secondary indicators of hydrology observed included Geomorphic Position (D2), and the FAC-Neutral Test (D5). This data point qualified as a wetland.

Data Point 2 (DP2) – Upland Data Point

Dominant vegetation in the vicinity of DP2 included American Sycamore *(Platanus occidentalis*, FACW) in multiple strata, Eastern Cottonwood (*Populus deltoides*, FAC), Black Willow (*Salix nigra*, OBL), Reed Canary Grass (*Phalaris arundinacea*, FACW), Canadian Goldenrod (*Solidago canadensis*, FACU), and River-Bank Grape (*Vitis riparia*, FACW). In addition, non-dominant vegetation observed included Spotted Touch-Me-Not (*Impatiens capensis*, FACW), Eastern Poison Ivy (*Toxicodendron radicans*, FAC), Tall Goldenrod (*Solidago altissima*, FACU), and Stinging Nettle (*Urtica dioica*, FACW). The plants at this data point qualified as hydrophytic vegetation. The soil from 0-16" had a matrix soil color of 10YR 4/3 with concentrations in the matrix at 10%, and a texture of Sandy Loam. The soil at the data point was mapped as Riverwash, and did not meet any hydric soil criteria. Only the secondary indicator the FAC-Neutral Test (D5) was observed. This data point did not meet wetland criteria.

Wetland 2 (Palustrine Emergent Wetland) (.002 acres within the Survey Area)

Wetland 2 was a palustrine emergent wetland located near Duke Energy Structure 147. This wetland does not appear to be hydraulically connected to any potential jurisdictional waters of the United States and therefore should be considered a non-jurisdictional 'water of the State' under the current Rapanos guidance. The ORAM score for Wetland 2 was 31, categorizing the wetland in a Category 1 or 2 gray zone, or low to moderate quality, wetland.

Data Point 3 (DP3) – Wetland Data Point

Dominant vegetation in the vicinity of Wetland 2 included Hybrid Cattail (*Typha glauca*, OBL), Common Fox Sedge (*Carex vulpinoidea*, FACW), and Frank's Sedge (*Carex frankii*, OBL). In addition, non-dominant vegetation observed included Dark-Green Bulrush (*Scirpus atrovirens*, OBL), Spotted Touch-Me-Not (*Impatiens capensis*, FACW), Canadian Goldenrod (*Solidago canadensis*, FACU), and Black Willow (*Salix nigra*, OBL). The plants at this data point qualified as hydrophytic vegetation. The soil from 0-16" had a matrix soil color of 10YR 4/2 with concentrations in the matrix at 10%, and a texture of Clay Loam. The soil at the data point was mapped as Hickory Clay Loam, and met the Depleted Matrix (F3), and Redox Depressions (F8) hydric soil criteria. Primary indicators of hydrology included Surface Water (A1), Sediment Deposits (B2), and secondary indicators of hydrology observed included Geomorphic Position (D2), and the FAC-Neutral Test (D5). This data point qualified as a wetland.

Data Point 2 (DP2) – Upland Data Point

Dominant vegetation in the vicinity of DP4 included Black Locust (*Robinia pseudoacacia*, FACU), White Ash (*Fraxinus americana*, FACU), Amur honeysuckle (*Lonicera maackii*, UPL), Canadian Goldenrod (*Solidago canadensis*, FACU), Yellow Sweet-Clover (*Melilotus officinalis*, FACU), and River-Bank Grape (*Vitis riparia*, FACW). In addition, non-dominant vegetation observed included White Clover (*Trifolium repens*, FACU), Alsike Clover (*Trifolium hybridum*, FACU), Eastern Poison Ivy (*Toxicodendron radicans*, FAC), White Ash (*Fraxinus americana*, FACU), and Frank's Sedge (*Carex frankii*, OBL). The plants at this data point did not qualify as hydrophytic vegetation criteria. The soil from 0-16" had a matrix soil color of 10YR 4/3 with concentrations in the matrix at 2%, and a texture of Clay Loam. The soil at the data point was mapped as Hickory Clay Loam, and did not meet any hydric soil criteria. No indicators of hydrology were observed. This data point did not meet wetland criteria.

4.3 Endangered, Threatened and Rare Species

The potential for listed species known to occur within Warren County were evaluated based on the habitat observed within the Survey Area. In addition, high quality natural communities and significant natural habitat areas were documented if encountered. A walking survey of the Survey Area was performed in which all observed Endangered, Threatened and Rare (ETR) species or specific known special habitats were noted. Coordination with the U.S. Fish and Wildlife Service (USFWS) and Ohio Department of Natural Resources (ODNR) Division of Wildlife occurred as it related to the Natural Heritage Database search results for the Survey Area (Appendix D).

Tables summarizing the results of ETR species as they relate to the habitat observed within the Survey Area are included with this report. Correspondence with the ODNR DOW and the USFWS regarding RTE located within a ½-mile of the Survey Area were sent July 16, 2018. Results of the USFWS coordination were received on July 23, 2018 and from ODNR-DOW on September 18, 2018. The copies of the correspondence letters are located in Appendix D.

Bat Roost Habitat

The Indiana Bat (*Myotis sodalis*, federally endangered) and Northern Long-eared Bat (*Myotis septentrionalis*, federally threatened) are protected under the Endangered Species Act, which is overseen by the USFWS. Typical guidance from USFWS regarding potential bat roost trees is avoidance of cutting trees from April through October. The Survey Area was assessed for potential bat roosting habitat with respect to any indicated clearing activities. Potential bat roost trees include dead or dying trees (including live shagbark hickories) with at least 10-percent exfoliating bark, a diameter at breast height (DBH) of at least 3 inches, and solar exposure for maternity roost trees (the tree is on a wooded edge or in a canopy gap). If applicable, correspondence from USFWS regarding Indiana Bat and Northern Long-eared Bat is included within Appendix D.

Suitable bat roost habitat was observed within wooded the portions of the Columbia Substation Survey Area located outside of the existing maintained right-of-way (ROW). Specific areas should be evaluated before any tree clearing takes place.

5 Jurisdictional Analysis

5.1 U.S. Army Corps of Engineers

The USACE has authority over the discharge of fill or dredged material into “waters of the U.S.”. This includes authority over any filling, mechanical land clearing, or construction activities that occur within the boundaries of any “waters of the U.S.” A permit must be obtained from the USACE before any of these activities occur. Permits can be divided into two general categories: Individual Permits and Nationwide Permits.

Individual Permits are required for projects that do not fall into one of the specific Nationwide Permits (NWP) or are deemed to have significant environmental impacts. These permits are much more difficult to obtain and receive a much higher level of regulatory agency and public scrutiny and may require several months to more than a year for processing.

Nationwide Permits (NWP) have been developed for projects that meet specific criteria and are deemed to have minimal impact on the aquatic environment. There are currently 52 Nationwide Permits for qualifying activities with 31 Nationwide Permit General Conditions that must be satisfied in order to receive NWP consideration from the USACE.

5.2 Ohio Environmental Protection Agency

The OEPA is responsible for issuing Clean Water Act (CWA) Section 401 permits known as Water Quality Certifications (WQC) for all impacts to “waters of the State of Ohio.” This includes authority over any dredging, filling, mechanical land clearing, impoundments or construction activities that occur within the boundaries of any “waters of the State,” including those isolated waters not otherwise regulated by the USACE.

The OEPA issues Section 401 WQC in conjunction with the USACE’ Section 404 permits. A §401 Water Quality Certification must be received before the USACE can issue any §404 Department of the Army Permit. The OEPA must issue Individual §401 WQC for all Individual §404 Permits.

Water quality certification may be granted, without notification to the OEPA, if the project falls under the NWP limitations described above. In order to qualify for this granted certification, all prior-authorized and *de minimis* Ohio State Certification General Limitations and Conditions as published by the OEPA must be satisfied.

The OEPA also requires notification for all impacts to isolated wetlands, which includes a permit application and mitigation plan pursuant to Section 6111 of Ohio Revised Code (ORC).

6 Summary and Conclusion

6.1 Summary

Cardno inspected the 5484 – 138kV Columbia Substation Survey Area on July 5. 2018.

6.1.1 Wetlands and Waterways

One (1) emergent wetland, one (1) forested wetland, and four (4) streams were identified within the F5484 – 138 kV Columbia Substation Survey Area.

Table 6-1 Features Identified within the 5484 – 138kV Columbia Substation Project Survey Area

Feature Name	USGS/ NWI Identified	Feature Class	Regulatory Status[1]	Riffles / Pools	Dimensions (ft)		Substrate	QHEI/HHEI/ ORAM Score	Linear Footage (LF)	Acreage (AC)
					Width	Depth				
Stream 1	No	Ephemeral	Jurisdictional	No	1.5	.75	G-Si	26	75	<0.01
Stream 2	Yes	Perennial	Jurisdictional	Yes	186	N/A	N/A	N/A	100	0.43
Stream 3	No	Intermittent	Jurisdictional	Yes	2	.75	B-Si	53	75	<0.01
Stream 4	No	Intermittent	Jurisdictional	Yes	5	1	B-Si	67	75	<0.01
Wetland 1	No	PFO	Jurisdictional	N/A	N/A	N/A	N/A	54	N/A	0.08
Wetland 2	No	PEM	Non-jurisdictional	N/A	N/A	N/A	N/A	31	N/A	<0.01
Totals			**Streams**		**Ephemeral**		**75 LF**			**<0.01**
					Intermittent		**150 LF**			**0.011**
					Perennial		**100 LF**			**0.43**
			Wetlands		**PEM/ PFO**	**JD**	**---**			**0.08**
						Non-JD	**---**			**<0.01**
			Waterbodies Total		**Jurisdictional**		**325 LF**			**0.52**
					Non-Jurisdictional		**---**			**<0.01**

[1] Regulatory Status is based on our "professional judgment" and experience, however the USACE makes the final determination.

6.1.2 Endangered, Threatened, and Rare Species

Several sources of information were consulted to further define the potential habitat of listed species that occur within the county of the Survey Area. Correspondence received from USFWS and ODNR-DOW

contain lists of the ETR species known to occur within Warren County and their potential to occur within the Survey Area based on their habitat requirements and observations during the field survey (Appendix D).

6.1.3 Indiana Bat and Northern Long-eared Bat Roost Habitat

The entire Survey Area was walked to identify potential Indiana Bat and Northern Long-eared Bat roost trees. Based on our field inspection and our best professional judgment, there are potential roost or maternity roost trees suitable for harboring Indiana Bats and Northern Long-eared Bats within the Survey Area. Suitable bat roost habitat was observed within the wooded areas located outside the existing ROW, including the wooded riparian corridor of Stream 1 and 2.

In the event tree clearing activity becomes a work priority within the Survey Area, it is recommended that a field inspection be performed within the clearing limits to ensure that potential bat habitat has not developed.

The USFWS is the regulatory authority that makes the final determination as to the status of the Indiana Bat and Northern Long-eared Bat in the Survey Area. A letter based on the field observations was submitted to the USFWS for concurrence on July 16, 2018 and results of the USFWS was received on July 23, 2018. A copy of the correspondence letter and agency response can be found in Appendix D.

6.2 Conclusion

A permit must be obtained from the USACE and the OEPA prior to any filling, dredging, or mechanical land clearing that occurs within the boundaries of any ‘waters of the U.S.’ or ‘waters of the State’.

While this report represents our best professional judgment based on our knowledge and experience, it is important to note that the Huntington District of the U.S. Army Corps of Engineers has final discretionary authority over all jurisdictional determinations of ‘waters of the U.S.’ including wetlands under Section 404 of the CWA in this region. It is therefore, recommended that a copy of this report be furnished to the Huntington District of the U.S. Army Corps of Engineers to confirm the results of our findings.

7 References

Environmental Laboratory. 1987. *U.S. Army Corps of Engineers' Wetland Delineation Manual*, Technical Report Y-87-1, U.S. Waterways Experiment Station, Vicksburg, MS.

Environmental Laboratory. 2010. *Regional Supplement to the Corps of Engineers Wetland Delineation Manual: Midwest Region*, ERDC/EL TR-10-16, U.S. Army Engineer Research and Development Center, Vicksburg, MS.

Gleason, H.A. and A. Cronquist. 1991. *Manual of Vascular Plants of Northeastern United States and Adjacent Canada*. 2nd Edition. The New York Botanical Garden. Bronx, NY.

Lichvar, R.W. 2013. The National Wetland Plant List: 2013 Wetland Ratings. Phytoneuron 2013-49: 1-241. Published July 17, 2013. ISSN 2153 733X.

Lichvar, R.W., and John T. Kartesz. 2009. *North American Digital Flora: National Wetland Plant List, version 2.4.0* (https://wetland_plants.usace.army.mil). U.S. Army Corps of Engineers, Engineer Research and Development Center, Cold Regions Research and Engineering Laboratory, Hanover, NH, and BONAP, Chapel Hill, NC.

Lichvar, R., Melvin, N.C., Butterwick, M.L. and Kirchner, W.N. 2012. *National Wetland Plant List Indicator Rating Definitions.* ERDC/CRREL TN-12-1. Hanover, NH: U.S. Army Engineer Research and Development Center, Cold Regions Research and Engineering Laboratory. http://www.fws.gov/wetlands/documents/National-Wetland-Plant-List-Indicator-Rating-Definitions.pdf

Ohio Environmental Protection Agency, Division of Surface Water. 2009. Biological and Water Quality Study of the Lower Little Miami River and Selected Tributaries 2007 Including the Todd Fork Subwatershed.
(https://www.epa.state.oh.us/portals/35/documents/lowerlittlemiamirivertsd2007.pdf)

Reed, P. B., Jr. 1988. National List of Plant Species that Occur in Wetlands: 1988. Washington, DC: U.S. Fish and Wildlife Service.

United States Department of Agriculture, Natural Resource Conservation Service (NRCS). Web Soil Survey. Soil Survey of Warren County, OH.

United States Environmental Protection Agency (EPA). 2015. Connectivity of Streams & Wetlands to Downstream Waters: A Review & Synthesis of the Scientific Evidence (http://www.epa.gov/cleanwaterrule)

United States Environmental Protection Agency (EPA). 2015. Technical Support Document for the Clean Water Rule: Definition of Waters of the United States (http://www.epa.gov/cleanwaterrule)

DUKE ENERGY
5484 – 138kV Columbia Substation

FIGURES

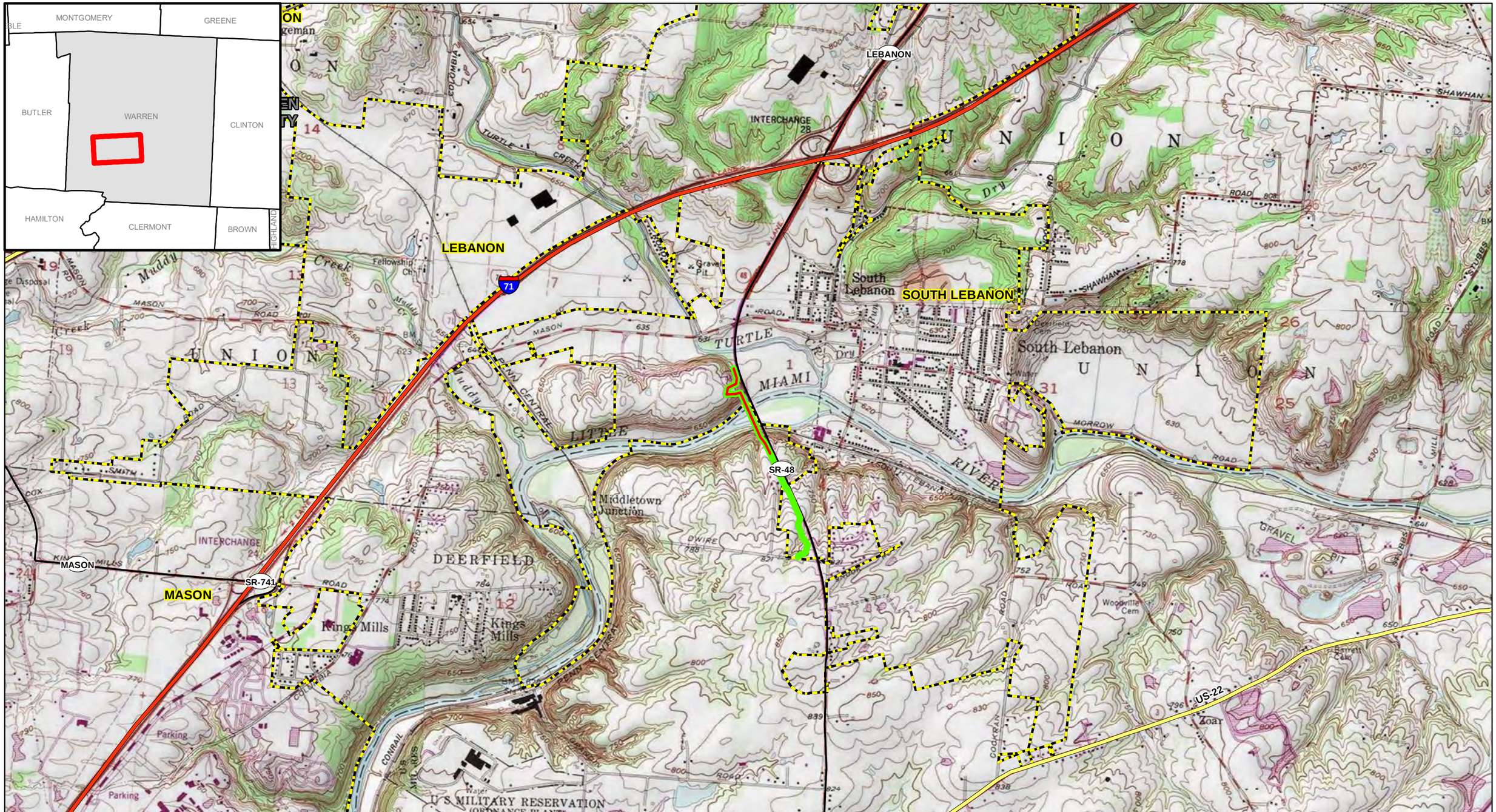

PROJECT LOCATION

WARREN COUNTY, OH

REFERENCE: USGS 7.5' TOPOGRAPHIC QUADRANGLE: LEBANON AND SOUTH LEBANON, OHIO. OBTAINED VIA ESRI USA TOPO, NATIONAL GEOGRAPHIC TOPO, AND USGS, ACCESSED 01/2017.

N

0 1,000 2,000 Feet

Project Area
Survey Area
Interstate
State Highway
US Highway
Railroad
County Boundary
Municipal Boundary

DUKE ENERGY.

Cardno

FIGURE 1
WATERS OF THE U.S. DELINEATION
F5484 – 138kV COLUMBIA SUBSTATION
REBUILD AND EXTENSION
DUKE ENERGY
WARREN COUNTY, OHIO

DRAWN BY: DKT DATE: 10/2/2018
CHECKED: CJ APPROVED: JT

R:\Projects\15\156\156720M_DukeEnergy9193\M59_SOW22_5484 138kVColumbiaSubstation\GIS\MXD\WDR\20181002_F1_Project Location.mxd

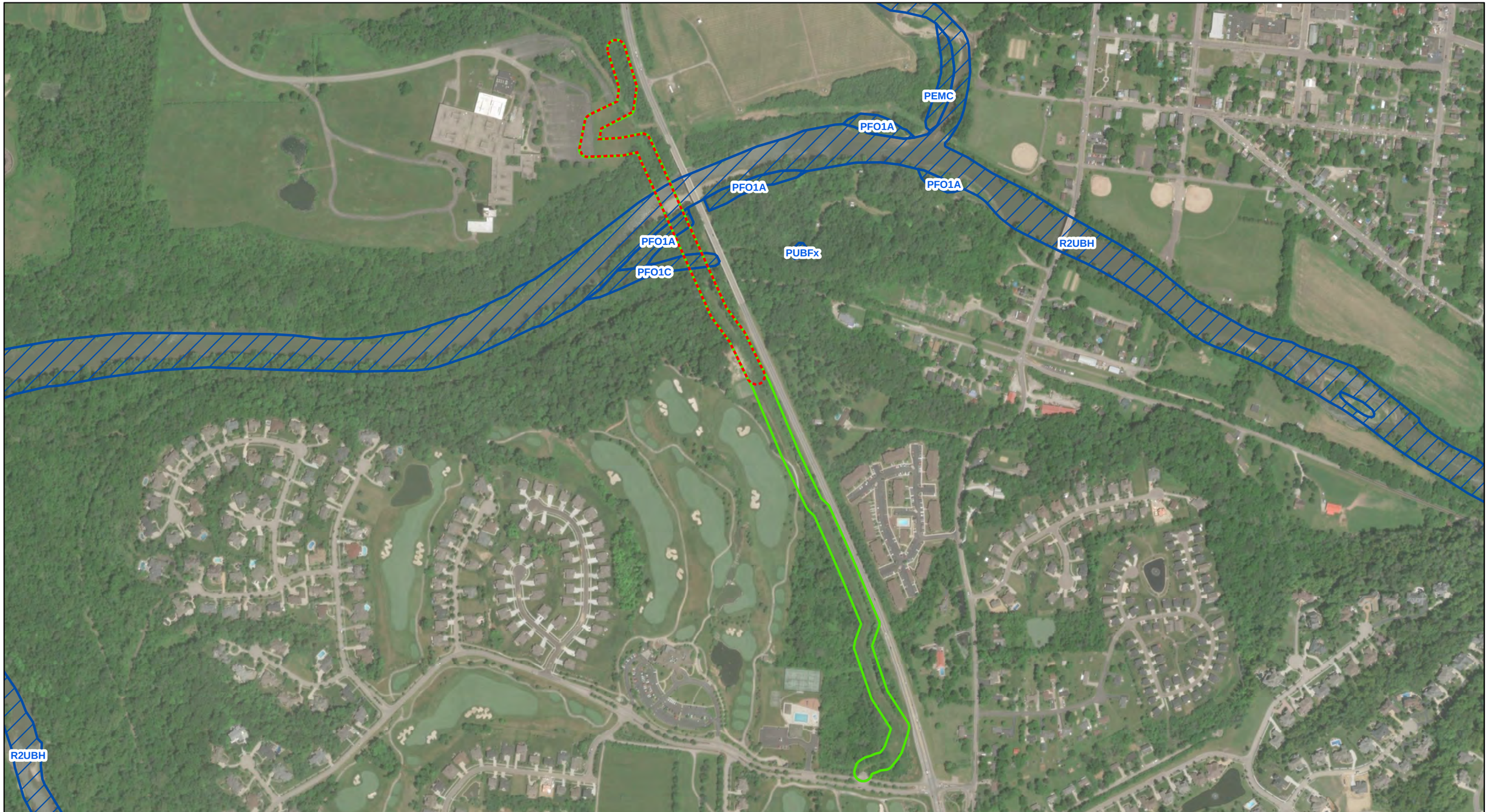

PROJECT LOCATION

WARREN COUNTY, OH

REFERENCE: USGS 7.5' TOPOGRAPHIC QUADRANGLES: LEBANON AND SOUTH LEBANON, OHIO. OBTAINED VIA ESRI USA TOPO, NATIONAL GEOGRAPHIC TOPO, AND USGS, ACCESSED 01/2017.

N

0 250 500 1,000 Feet

Project Area | Survey Area | NWI

DUKE ENERGY.

Cardno

FIGURE:2

WATERS OF THE U.S. DELINEATION
F5484 – 138kV COLUMBIA SUBSTATION
REBUILD AND EXTENSION
DUKE ENERGY
NATIONAL WETLAND INVENTORY

DRAWN BY: DKT DATE: 10/2/2018
CHECKED: CAJ APPROVED: JT

R:\Projects\15\156\156720M_DukeEnergy9193\M59_SOW22_5484 138kVColumbiaSubstation\GIS\MXD\WDR\20181002_F2_NWI.mxd

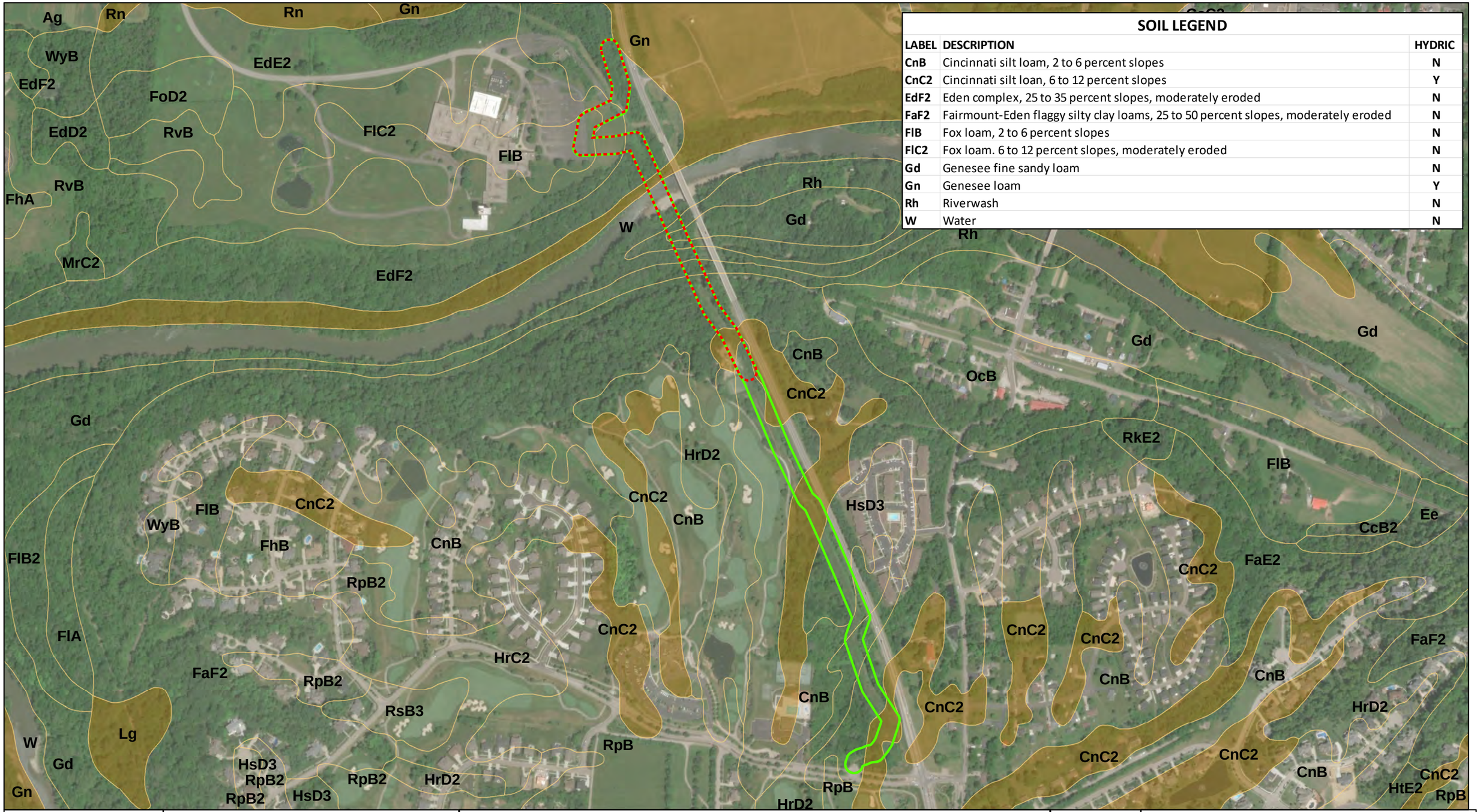

SOIL LEGEND

LABEL	DESCRIPTION	HYDRIC
CnB	Cincinnati silt loam, 2 to 6 percent slopes	N
CnC2	Cincinnati silt loan, 6 to 12 percent slopes	Y
EdF2	Eden complex, 25 to 35 percent slopes, moderately eroded	N
FaF2	Fairmount-Eden flaggy silty clay loams, 25 to 50 percent slopes, moderately eroded	N
FlB	Fox loam, 2 to 6 percent slopes	N
FlC2	Fox loam. 6 to 12 percent slopes, moderately eroded	N
Gd	Genesee fine sandy loam	N
Gn	Genesee loam	Y
Rh	Riverwash	N
W	Water	N

PROJECT LOCATION

WARREN COUNTY, OH

REFERENCE: USGS 7.5' TOPOGRAPHIC QUADRANGLES: LEBANON AND SOUTH LEBANON, OHIO. OBTAINED VIA ESRI USA TOPO, NATIONAL GEOGRAPHIC TOPO, AND USGS, ACCESSED 01/2017.

N

0 250 500 1,000 Feet

Project Area
Survey Area
Soil Unit
Hydric Soil Unit

DUKE ENERGY.

Cardno

FIGURE:3

WATERS OF THE U.S. DELINEATION
F5484 – 138kV COLUMBIA SUBSTATION
REBUILD AND EXTENSION
DUKE ENERGY
HYDRIC SOIL MAP

DRAWN BY: DKT DATE: 10/2/2018
CHECKED: CAJ APPROVED: JT

R:\Projects\15\156\156720M_DukeEnergy9193\M59_SOW22_5484 138kVColumbiaSubstation\GIS\MXD\WDR\20181002_F3_Soils.mxd

This foregoing document was electronically filed with the Public Utilities

Commission of Ohio Docketing Information System on

11/14/2018 1:04:03 PM

in

Case No(s). 18-1571-EL-BNR

Summary: Notification CONSTRUCTION NOTICE FOR THE F5484 – 138 kV COLUMBIA SUBSTATION- PART 1 electronically filed by Carys Cochern on behalf of Kingery, Jeanne W Ms.