Public Utilities
Commission of Ohio

Memo

To: Docketing Division

From: Jill Henry, Rail Specialist, Rail Division

Cc: PUCO Legal Department

Date: 2/16/17

Re: PUCO Case No. 17-0471-RR-RCP- In the Matter of a Request for Upgrades to the Active Warning Devices at the Norfolk Southern Railway Crossing, Bellefontaine Avenue/SR739 DOT#481-532E, in Marion County, Ohio.

On January 13, 2017, the Ohio Rail Development Commission (ORDC) authorized funding for Norfolk Southern Railway to upgrade the active warning devices at Bellefontaine Avenue/SR739 DOT#481-532E, in Marion County, Ohio. The crossing was surveyed on April 8, 2016 and found to warrant the upgrades. The electric utility provider for this crossing is Ohio Edison.

The project will be paid for with federal funds and is actual cost. The plans and estimates for the project in the amount of $371,154.00 have been approved. Construction may commence at once. **Staff requests a Finding & Order with completion of the project in nine months.** Staff requests that the following language be incorporated in the Finding & Order:

It is expected that all work necessary for FHWA acceptance of the warning devices will be completed by the in-service due date and that the railroad will be responsible for this work. This work includes, but is not limited to:

- **Any ancillary work to make the warning devices function as designed and visible to the roadway user, and**
- **MUTCD compliance, including minor roadway work if necessary.**

Please serve the following parties of record:

Norfolk Southern Railway Company
Stephen Klinger
Public Projects Engineer
1200 Peachtree Street NE
Atlanta, GA 30309-3597

Norfolk Southern Railway Company
Cayela Wimberly
Director Grade Crossing Safety
1200 Peachtree Street NE
Atlanta, GA 30309-3597

Ohio Rail Development Commission
Cathy Stout
Safety Manager
1980 West Broad Street
Mail Stop #3140
Columbus, Ohio 43223

City of Marion
Jim Bischoff
City Engineer
233 West Center Street
3rd Floor
Marion, Ohio 43302

Ohio Edison- First Energy

OHIO RAIL DEVELOPMENT COMMISSION
INTER-OFFICE COMMUNICATION

TO: **Randall Schumacher, Supervisor, Rail Division, PUCO**

FROM: **Cathy Stout, Manager, Safety Section, ORDC**

BY: **Eric Neff, Safety Manager, Safety Section, ORDC**

SUBJECT: **Marion County, Bellefontaine Ave DOT 481532E,**
PID #103759, NS Project 10.3163

DATE: **January 13, 2017**

The Public Utilities Commission of Ohio (PUCO) established a diagnostic survey at the subject location on April 8, 2016. The Ohio Rail Development Commission (ORDC) attended the review. The Diagnostic Team recommended the improvement of warning devices to flashing lights and roadway gates. Copies of the diagnostic review form and the plan and estimate are attached.

PE has already been provided by the railroad. ORDC approves the site plans and estimates as provided. Please issue a construction-only order for the project outlined above. This authorization is made with the stipulation and understanding that an approved estimate may contain entries for items or activities that may be cited and found to be ineligible for federal participation during the project audit.

It is expected that all work necessary for FHWA acceptance of the warning devices will be completed by the in-service due date and that the railroad will be responsible for this work. This work includes, but is not limited to:

- any ancillary work to make warning devices function as designed and visible to the roadway user, and
- MUTCD compliance – including minor roadway work if necessary.

Thank you for your assistance with these matters.

Attachment: Diagnostic Review
Plan & Estimate

c: Jill Henry, Rail Division Specialist, PUCO
ORDC Project Manager (file)

OHIO RAIL DEVELOPMENT COMMISSION

Mail Stop #3140, 1980 West Broad Street, Columbus OH 43223
John R. Kasich, Governor • Mark Policinski, ORDC Chairman

January 13, 2017

Mr. Stephen Klinger
Norfolk Southern
Public Projects Engineer
1200 Peach Street NE, Box 123
Atlanta, Ga. 30309

RE: Marion County, Bellefontaine Ave DOT 481532E
PID #103759, NS Project 10.3163

Dear Mr. Klinger:

The plan and estimate dated December 12, 2016, for the referenced project has been reviewed and is acceptable. The project is authorized for construction under the master agreement between Ohio Rail Development Commission, Public Utilities Commission of Ohio and Norfolk Southern (NS) executed on December 19, 2012. NS may proceed with the construction of the proposed grade crossing warning system in accordance with the abbreviated plan. This authorization is made with the stipulation and understanding that the approved estimate may contain entries for items or activities that may be cited and found to be ineligible for federal participation during the project audit. Reimbursement of eligible actual cost is limited to $371,154.00. Additional costs must be approved in writing by the Ohio Rail Development Commission (ORDC) prior to being incurred. Emergency verbal authorizations by ORDC may be permitted and will be confirmed by ORDC in writing within ten (10) business days of the verbal approval.

This authorization is contingent upon NS accepting the following instructions:

1. NS's project foreman will furnish written notification five (5) working days prior to the date work will start at the project site to Eric Neff, ORDC, email: eric.neff@dot.ohio.gov and to Jill Henry the Public Utilities Commission of Ohio at email: jill.henry@puco.ohio.gov. NS's project foreman will also notify the same of any stops and re-starts of the work activity and of the date work was completed for the project.

2. NS will arrange for utilities to be located at the project site by the Ohio Utilities Protection Service (OUPS) prior to any construction activities at the site. Utilities that are not participating members of the service must be contacted directly by NS.

3. NS's project foremen will notify Eric Neff at 614-752-0399 (telephone) or eric.neff@dot.ohio.gov (email) of any changes in the scope of work, cost overruns, material changes, etc. which are not included in the approved plan and estimate and secure approval of same before the work is performed.

4. Open cut of roadways is not permitted except in unusual circumstances and must be coordinated with the local highway authority and preapproved by ORDC.

5. NS will furnish two (2) copies of each partial bill to ORDC. Please find the enclosed ODOT Purchase Order to reference when billing.

6. NS will furnish two (2) copies of the final all-inclusive bill to ORDC stating the exact dates of starting and completing work, the initial and final dates of construction and location where the accounts may be audited.

7. This installation will include any ancillary work to make the warning devices function as designed and meet MUTCD.

Thank you for your assistance with these matters.

Sincerely,

Eric T. Neff
Project Manager, Safety Programs

Attachments: Letter Agreement
State of Ohio Purchase Order

C: Randall Schumacher, Rail Division Supervisor, PUCO (email)
Jill Henry, Grade Crossing Planner, PUCO (email)
Susan Arduini, ORDC (email)
ORDC (file)

12-Dec-16

Detailed Estimate for Grade Crossing Warning Devices

City/State: MARION, OH
MilePost: S-44.29
State Proj. No.: PID: 103759
S&E Proj. No.: 10.3163
Man Days: 180

Road: BELLEFOUNTAINE AVE
DOT/AAR: 481532E
County: MARION
File Number: 061-10.0430

*****Purchases - Others*****		
Meals and Lodging:	$24,621.41	
Rental of Equipment:	$33,657.37	
(2 Trucks, 1 Backhoe w/ Trailer and 1 Pipe-Pusher for 30 Days)		
Construction Supervision Vehicle:	$5,148.45	
Purchases - Other Total:		$63,427.23
*****Material And Additives*****		
Material Cost:	$138,003.00	
Sales and Use Tax:	$11,040.00	
Material Handling Freight:	$13,800.32	
Material Total:		$162,843.32
*****Labor And Additives*****		
Labor Cost:	$57,960.00	
(6 man crew at $1,932.00 a day for: 30 days)		
Payroll Tax & Overheads:	$49,416.70	
Preliminary Engineering:	$20,576.14	
Construction Supervision:	$16,930.12	
Labor Total:		$144,882.96
	Project Cost:	$371,153.51
	Scrap / Salvage Credit:	$0.00
	Project Total:	**$371,154.00**

Estimated on: 12-Dec-16 Estimated by: ndr3j

Estimate valid for 1 year from date of estimate

Norfolk Southern Railway

Highway Crossing Signalization Program - Material List

Do not substitute items without permission from S & E Engineering

City:	MARION
Road:	BELLEFOUNTAINE AVE
Mile Post:	S-44.29
Drawing Number:	SNCS04427
State ProjectNumber:	PID: 103759
County:	MARION
A A R Number:	481532E
Project Number:	10.3163
File Number:	061-10.0430
New File Number:	CX0112787
WBS:	F-03657
Store Number:	S803
Supervisor:	A.R. ETHERTON
Tax Code:	

Vendor to supply the following copies after pricing:

1 Set - Material Management with original Invoice
2 Sets - with plans shipped in car with material
1 Set - S&EGen. Supt. Construction w/copy of invoice

Location: MARION OH S&E Proj. No.: 10.3163 AFE No.: F-03657 Drawing No.: SNCS04427

Store No.: S803 P.O.Number: Date Required: Date Shipped: Vendor: Interrail Engineering, INC

Qty.	Class-Item-CD	UI	Price per Item	Total Price	Item Description	Quantity Shipped	Quantity Installed Date Quan.	Date Quan.	Date Quan.	Quantity Returned (Credit)	Special Instructions
3	670-360693-4	EA	$5.80	$17.40	AAR/DOT NUMBER PLATE/DECAL, ORDER 3 PER PROJECT. 60 DAY LEAD TIME. SUPPLIED BY S'TRAN.						
1	165-006505-4	EA	$1,075.23	$1,075.23	AC SERVICE, COMPLETE LESS METER BASE, ASSEMBLED ON 30' POLE						
20	105-002620-4	EA	$302.42	$6,048.40	BATTERY, NICAD 340AH, MODEL SPL340						
2	670-503047-4	EA	$181.50	$363.00	BELL, CROSSING ELECTRONIC GENERL SIGNAL, EB-3-360-5 CR 02-044350						
1	670-004937-4	EA	$272.93	$272.93	BOX, JCT TERMINAL BOX COMPLETE W/12 TERMINALS,THREADED ENTRANCE & AIR HOSE SSC# 091428-261AX						
2	670-980689-4	EA	$75.48	$150.96	BRACKET HIGH WIND, (RIGID 3'), WIG- 191036, WALRUS TUSK TYPE						
2	670-561375-4	EA	$1,208.79	$2,417.58	BRACKET, GATE SAVER, NEG385102GS, SPRING LOADED SWING AWAY ADAPTER FOR FIBERGLASS/ALUMINUM GATES, USE WITH GATE 38' AND LESS						
1	670-356949-4	EA	$94.05	$94.05	CABLE, 10' GENERATOR HOOK UP, SERRMI P/N 40524. FEMALE CONNECTOR						
500	465-939422-4	LF	$2.93	$1,465.00	CABLE, UG 12 CONDUCTOR NO 14 AWG SOLID EACH CONDUCTOR WITH 5/64 IN INSULATION 10 MIL						
800	465-292862-4	LF	$1.36	$1,088.00	CABLE, UG 2-6 TWISTED, S-23 OKONITE 113-12-3933 SOLID TINNED CONDUCTOR						
500	465-292929-4	LF	$4.13	$2,065.00	CABLE, UG 5 COND. NO. 6 AWG SOLID COPPER CABLE TO MEET NS CORP. SPEC. FOR SIGNAL						
350	465-791835-4	FT	$3.54	$1,239.00	CABLE, UG AC ENTRANCE 3C#6-7X OKONITE FMPF-L 094-078 TR W/G 1 X 8 7X W010 BRZ TAPE 600V PRODUCT CODE 206-11-6070						
1	670-009120-4	EA	$3,745.32	$3,745.32	CANTILEVER, WT/F ARM 20' W/WALKWAY KIT SAFTRAN #071294-20NS2						
1	670-010671-4	EA	$738.15	$738.15	CHARGER, BATTERY CRAGG MODEL 40 DTC-12V, 40 AMP, P/N 520940						
1	670-010672-4	EA	$960.15	$960.15	CHARGER, BATTERY CRAGG MODEL 60 DTC-12V, 60 AMP, P/N 520960						
140	165-544477-4	FT	$2.61	$365.40	CONDUIT, 4"x10' PVC, SCHEDULE 80 BELL CONNECTOR AT ONE END, 1/2 PT. GLUE IN KIT 670-123298-4						

APPROVED BY STATE | APPROVED BY RAILROAD | CAR NUMBER | SEAL NUMBER

Location: MARION OH S&E Proj. No.: 10.3163 AFE No.: F-03657 Drawing No.: SNCS04427

Store No.: S803 P.O.Number: Date Required: Date Shipped: Vendor: Interrail Engineering, INC

Qty.	Class-Item-CD	UI	Price per Item	Total Price	Item Description	Quantity Shipped	Quantity Installed Date Quan.	Date Quan.	Date Quan.	Quantity Returned (Credit)	Special Instructions
4	670-664917-4	EA	$90.11	$360.44	CONNECTOR KIT, WELDED FAR RAIL, CONSISTING OF RUBBER HOSE PROPERLY DRILLED, BONDSTRAND, 1 SPLICING SLEEVE, 1 REDUCING SLEEVE, 3 CLAMPS, 1 TRACK CLIP, 1 WEB WELDED TRACK CONNECTOR, 1 WELD METAL, SAFETRAN 111359-2X						
4	670-632520-4	EA	$79.69	$318.76	CONNECTOR KIT, WELDED NEAR RAIL, CONSISTING OF, RUBBER HOSE PROPERLY DRILLED, BONDSTRAND, SPLICING SLEEVE, 1 REDUCING SLEEVE, 5 CLAMPS, 1 TRACK CLIP, 1 WEB WELDED TRACK CONNECTOR, 1 WELD METAL, SAFETRAN 111359-1X						
2	670-793404-4	EA	$1,205.32	$2,410.64	COUNTERWEIGHT PKAGE, 17-24'GATE S'TRAN S- MECH ONLY, STAINLESS, TO INCLUDE HUB, SUPPORT ARMS						
7	670-760012-4	EA	$9.95	$69.65	COVER, FOR 1 WAY FLASHING LIGHT ASSY. 18 OZ. BLACK VINYL COATED NYLON. ====TO COVER 2 LAMPS====						
1	000-000001-4	EA	$20,000.00	$20,000.00	CURBING/SIDEWALK WORK, INSTALL/REPLACE						
1	670-986650-4	EA	$354.27	$354.27	DISPOSAL, CONSTRUCTION DEBRIS AND CLEANING X'ING EQUIPMENT CONTAINER						
1	670-000004-4	EA	$700.00	$700.00	FCC LICENSE FOR MONITOR/RADIO						
6	670-000003-4	EA	$255.85	$1,535.10	FILL/STONE #57, QUANITY IS BASED ON TRUCK LOAD PLUS DELIVERY COST						
1	670-744631-4	EA	$3,154.39	$3,154.39	FOUNDATION, CFLS FOR SAFETRAN MODEL "WT/F" ARMS 12' TO 30' SINGLE MAST, DIXIE# DP4B-SM12-26-4, 5'10" CR 02-205902						
1	670-015231-4	EA	$599.40	$599.40	FOUNDATION, DIXIE,S-2 GATE 2'6"X2'6"X5'6" ASSEMBLED						
2	670-005377-4	EA	$338.00	$676.00	GATE ARM, ALUMINUM, 17-24 FT, ARM ASSEMBLY, INCLUDES GATE GUARD FOR GATE LIGHT CABLE. HIGH INTENSITY VERTICAL STRIPES.						
1	670-698491-4	EA	$35,113.24	$35,113.24	GCP4000 - 2 TRK (2TC) - REDUNDANT - 40/60 AMP WIRED RACK EQUIP. FOR 6X8 XING SHELTER, (INCL. 2 TRK CHASSIS A80465, 4 TRK MODS. A80418, 2-SSCC A80405, 2 CPU A80403, 1 SEAR A80410, 1 DISPLAY A80407, 1 TRANS MOD. A80468, 1-40 & 1-60 AMP CHARGER) IPN: 003131-						
1	670-477991-4	EA	$410.00	$410.00	KIT, GROUNDING ASSY FOR AL I/S INCLUDES 8 GRD RDS,200'#4WIRE,12 4 WIRE ONE-SHOTS. ERICO SBK206						

APPROVED BY STATE	APPROVED BY RAILROAD	CAR NUMBER	SEAL NUMBER

Location: MARION OH S&E Proj. No.: 10.3163 AFE No.: F-03657 Drawing No.: SNCS04427

Store No.: S803 P.O.Number: Date Required: Date Shipped: Vendor: Interrail Engineering, INC

Qty.	Class-Item-CD	UI	Price per Item	Total Price	Item Description	Quantity Shipped	Quantity Installed Date Quan.	Date Quan.	Date Quan.	Quantity Returned (Credit)	Special Instructions
1	670-123298-4	EA	$361.54	$361.54	KIT, HARDWARE SUPPLIES REQUIRED X'ING P'CKAGES. WEB CONNECTORS FOR SHUNT(8EA) TAPE, AMPS,P'GUM PAINT,SLEEVES,TAGS,GLUE, 100 EA WHITE TAGS,)NE CAN BLUE MARKING PAINT ETC...						
2	670-092155-4	EA	$160.00	$320.00	LAMP ASSY, LED GATE ARM KIT (INCLUDES 3 LAMPS COMPLETE WITH CABLES AND MTG. HARDWARE) REC #: 9298-1120						
1	670-005055-4	EA	$955.23	$955.23	LAMP ASSY, LED, 12" MAST 1 WAY BACK LIGHTS (FRONT ON COMBO CANT.) (IPN: 042003-L481XNS)						
3	670-005057-4	EA	$952.05	$2,856.15	LAMP ASSY, LED, 4" CANT JURY ARM MAST (FRONT OR BACK) (IPN: 042003-L001534)						
1	670-005066-4	EA	$959.37	$959.37	LAMP ASSY, LED, 5" MAST 1 WAY BACK LIGHTS (IPN: 042003-L001493)						
1	670-005058-4	EA	$1,786.08	$1,786.08	LAMP ASSY, LED, 5" MAST BACK TO BACK LIGHTS (IPN: 042003-L487XNS)						
5	255-590880-4	EA	$17.52	$87.60	LOCK, AMERICAN LOCK MODEL H-10KA KEYED ALIKE TO PRIVATE KEYWAY D456 AND STAMPED "NS SIG"						
1	670-284677-4	EA	$6,525.00	$6,525.00	MAST, 12" CANTILEVER/GATE COMBO, FOR 12'-20' WT/F ARMS, GATE OFFSET AWAY FROM TRACK, INCL. LADDER KIT (IPN: 071292-20NST)						
1	670-637778-4	EA	$1,384.63	$1,384.63	MAST, 5" ALUMINUM 13'10" WITH DOUBLE JCT. BOX BASE. S'TRAN P# 070519-11AX.						
2	670-875060-4	EA	$2,596.32	$5,192.64	MECHANISM, GATE MODEL S-60, WITH DEFROSTER , WITHOUT MINI TRACKSIDE SENSOR S'TRAN # 0740007-X002A3						
2	670-000001-4	EA	$726.23	$1,452.46	MISC. EXPENSE, MATERAIL/FILL						
2	670-000007-4	EA	$307.02	$614.04	MISC. EXPENSE, TRACK WORK (I.E. INS JTS, RODS, ETC.)						
1	000-000000-4	EA	$5,000.00	$5,000.00	MISC. EXPENSE, UNDERGROUND BORING						
6	670-000016-4	EA	$1,500.00	$9,000.00	MISC. EXPENSE, UTILITY RELOCATION						
2	670-001355-4	EA	$74.00	$148.00	PACKAGE, HARDWARE SIGN 12 IN. (USE WITHWT/F MAST) MOUNTING, SERRMI A1250-8, HARMON @180004/0007,						
2	670-001347-4	EA	$59.67	$119.34	PACKAGE, HARDWARE SIGN 5 IN. MOUNTING, SERRMI A1250-5, HARMON @200965-000, OR						

APPROVED BY STATE	APPROVED BY RAILROAD	CAR NUMBER	SEAL NUMBER

Location: MARION OH S&E Proj. No.: 10.3163 AFE No.: F-03657 Drawing No.: SNCS04427

Store No.: S803 P.O.Number: Date Required: Date Shipped: Vendor: Interrail Engineering, INC

Qty.	Class-Item-CD	UI	Price per Item	Total Price	Item Description	Quantity Shipped	Quantity Installed Date Quan.	Date Quan.	Date Quan.	Quantity Returned (Credit)	Special Instructions
1	255-646807-4	EA	$32.59	$32.59	PADLOCK, SAFETRAN PART NO. 030399-29X SCREW TYPE FOR CIR CONTROLLER AND BTY. BOX						
1	670-514605-4	EA	$11.11	$11.11	PINNACLE, W-C SECT 1-11, 4"& 5" REF K1 110-8 OR SAFETRAN NO. @035045-503X						
1	165-902002-4	EA	$297.48	$297.48	PROTECTOR, SURGE 120/240VAC, ERICO P/N EPD120/240TDFL						
4	465-002899-4	EA	$40.24	$160.96	REEL, CABLE DISPOSABLE FOR CROSSING SIGNAL PACKAGES						
2	435-805560-4	EA	$2.78	$5.56	SAND, 25LB BAG FOR CABLE ENTRANCE INTO THE SHELTER						
1	670-113448-4	EA	$910.23	$910.23	SEARIII, (VHFC w/ANTENNA) - VHF COMMUNICATOR, SAFETRAN P/N A80276, 1/ PER CROSSING						
1	670-749325-4	EA	$226.97	$226.97	SHELF, FOLDING, FOR LAPTOP USE IN FARADAY 6X8 SHELTER, SAFETRAN 052852-128X						
1	670-755523-4	EA	$9,744.79	$9,744.79	SHELTER, 6'X8' ALUMN FARADAY W/1EA EQUIPMENT RACK, W/CABLE CHUTES BEHIND TERMINAL BOARD, W/GEN RECEPTICAL, BREAKER BOX GFI OUTLET FOR LAPTOP SHELF SAFETRAN 058400-68-85						
4	670-586967-4	EA	$44.91	$179.64	SHUNT COVER W/LAG SCREWS, 19"X19", SERRMI #40271, ORDER 1 PER SHUNT						
4	670-688850-4	EA	$369.89	$1,479.56	SHUNT, MULTI-FREQ. #62775-3497 SAFETRAN NARROW BAND						
1	670-397239-4	EA	$40.23	$40.23	SIGN CROSSING MALFUNCTION ASSEMBLY FOR 12" MAST, SAFETRAN #T17216						
1	670-393331-4	EA	$53.74	$53.74	SIGN CROSSING MALFUNCTION ASSEMBLY FOR 4" AND 5" MAST, SAFETRAN #T17215						
2	670-554843-4	EA	$77.05	$154.10	SIGN, 2 TRACK SIGN, HIGH INTENSITY, SAFETRAN #035207-2HX						
1	670-330382-4	RL	$18.06	$18.06	TAPE, THOR 3" DURATEC, ORANGE 1000' LENGTHS. "WARNING STOP DIGGING"						
1	670-007238-4	EA	$118.65	$118.65	UNIT, THE INSTALLATION AND WIRING OF A DEVICE WHICH REQUIRE A MINIMUM OF FOUR WIRE CONNECT-						

Total Material: $138,003.21

APPROVED BY STATE	APPROVED BY RAILROAD	CAR NUMBER	SEAL NUMBER

SH. NO.	CONTENTS
NX1	INDEX SHEET
1	LAYOUT
2	PROFILE
3	CABLE PLAN
4	LOAD CENTER
5	B12 & B16 CHARGERS & BATTERIES
6	4000 GCP 2-TK CHASSIS & MODULE LAYOUT
7	4000 GCP PROGRAMMING SETUP
8	4000 GCP PROGRAMMING SETUP
9	CONNECTORS FOR TRACK MODULES
10	CPU MODULE, SEAR III & VHF HOOK-UPS
11	SEAR III PROGRAMMING SETUP
12	SSCC#1 MODULE HOOK-UP
13	SSCC#2 MODULE HOOK-UP
14	CANTILEVER FLASHER LIGHTS
15	SIGNAL "A" S60 GATE & FLASHER CIRCUITS
16	SIGNAL "B" S60 GATE & FLASHER CIRCUITS
17	BACKBOARD 1A & 1B
18	REAR BACKBOARD 1A & 1B
19	FARADAY SHIELD 1A & 1B
20	FARADAY SHIELD 1C
21	HOUSE SIDE C LAYOUT & RACK PLACEMENT
22	HOUSE SIDE A LAYOUT
23	HOUSE SIDE B LAYOUT & TOP VIEW

INDEX SHEET

DESIGNED BY: JWB 11-22-16	NORFOLK SOUTHERN		
DRAWN BY: IRE 11-22-16	OFFICE OF ASS'T. VICE PRESIDENT COMM. & SIGNAL, ATLANTA, GA.	M.P.:	S-044.29
CHECKED BY: DBS 12-01-16	MARION, OH CFLGS AT BELLEFONTAINE AVE.		
IN SERVICE: - -	SANDUSKY DISTRICT	FILE No.	R-
	CADD or DWG. No. SNCS04429.NX1	SHEET No.	1 of 1

REVISION INITIALS

PROPERTY NORFOLK SOUTHERN RAILWAY CO.

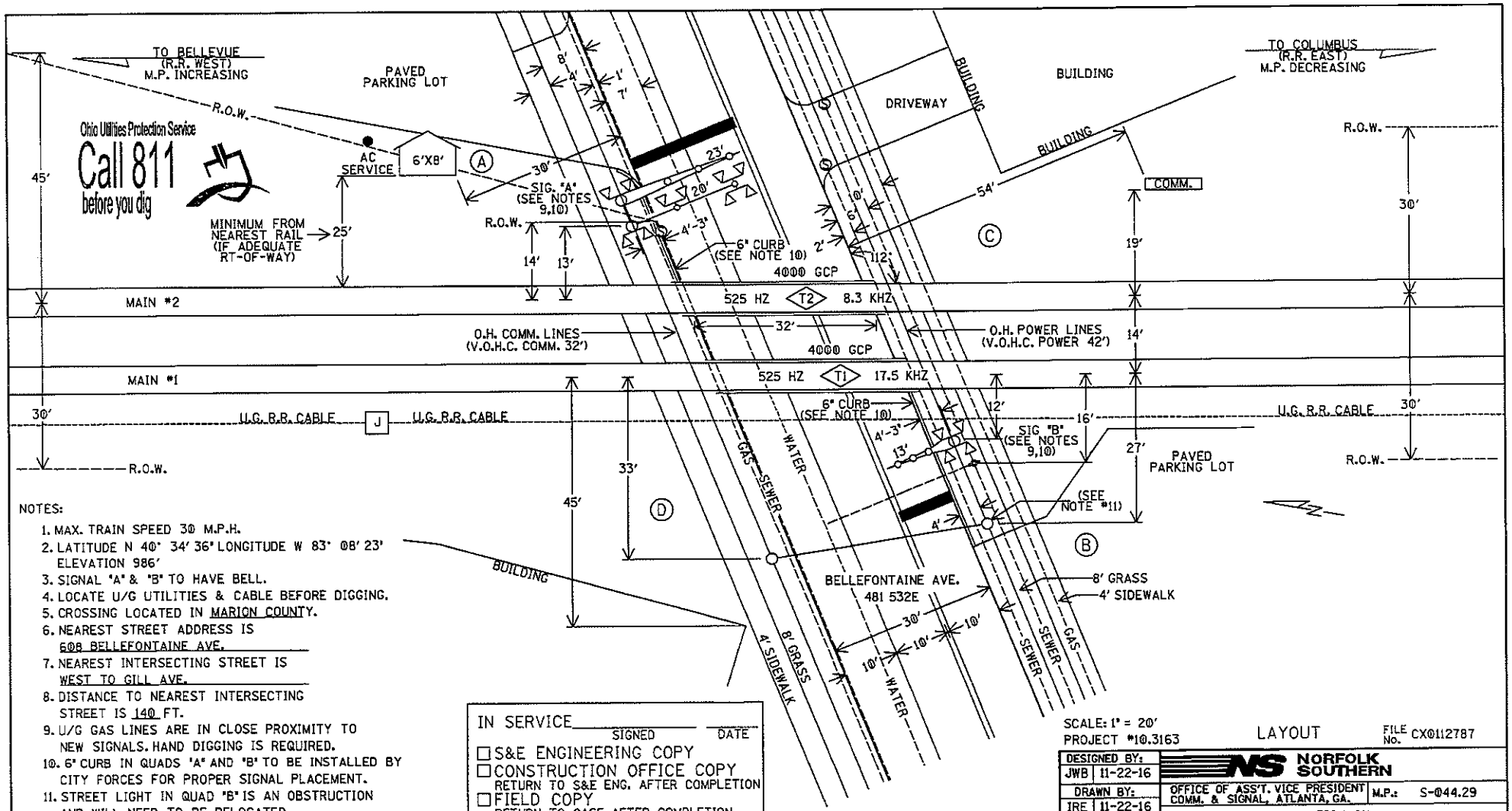

NOTES:

1. MAX. TRAIN SPEED 30 M.P.H.
2. LATITUDE N 40° 34' 36" LONGITUDE W 83° 08' 23" ELEVATION 986'
3. SIGNAL "A" & "B" TO HAVE BELL.
4. LOCATE U/G UTILITIES & CABLE BEFORE DIGGING.
5. CROSSING LOCATED IN MARION COUNTY.
6. NEAREST STREET ADDRESS IS 608 BELLEFONTAINE AVE.
7. NEAREST INTERSECTING STREET IS WEST TO GILL AVE.
8. DISTANCE TO NEAREST INTERSECTING STREET IS 140 FT.
9. U/G GAS LINES ARE IN CLOSE PROXIMITY TO NEW SIGNALS. HAND DIGGING IS REQUIRED.
10. 6" CURB IN QUADS "A" AND "B" TO BE INSTALLED BY CITY FORCES FOR PROPER SIGNAL PLACEMENT.
11. STREET LIGHT IN QUAD "B" IS AN OBSTRUCTION AND WILL NEED TO BE RELOCATED.

(A)(B)(C)(D) = QUADRANT MARKERS

IN SERVICE _____ SIGNED _____ DATE

☐ S&E ENGINEERING COPY
☐ CONSTRUCTION OFFICE COPY
RETURN TO S&E ENG. AFTER COMPLETION
☐ FIELD COPY
RETURN TO CASE AFTER COMPLETION
☐ PROJECT ENGINEER COPY

SCALE: 1" = 20'
PROJECT #10.3163

LAYOUT

FILE No. CX0112787

DESIGNED BY: JWB 11-22-16	NORFOLK SOUTHERN
DRAWN BY: IRE 11-22-16	OFFICE OF ASS'T. VICE PRESIDENT COMM. & SIGNAL, ATLANTA, GA. — M.P.: S-044.29
CHECKED BY: DBS 12-01-16	MARION, OH CFLGS AT BELLEFONTAINE AVE.
IN SERVICE: - -	SANDUSKY DISTRICT — FILE No. R-
	CADD or DWG. No. SNCS04429.01 — SHEET No. 1 of 23

REVISION INITIALS

PROPERTY
NORFOLK SOUTHERN RAILWAY CO.

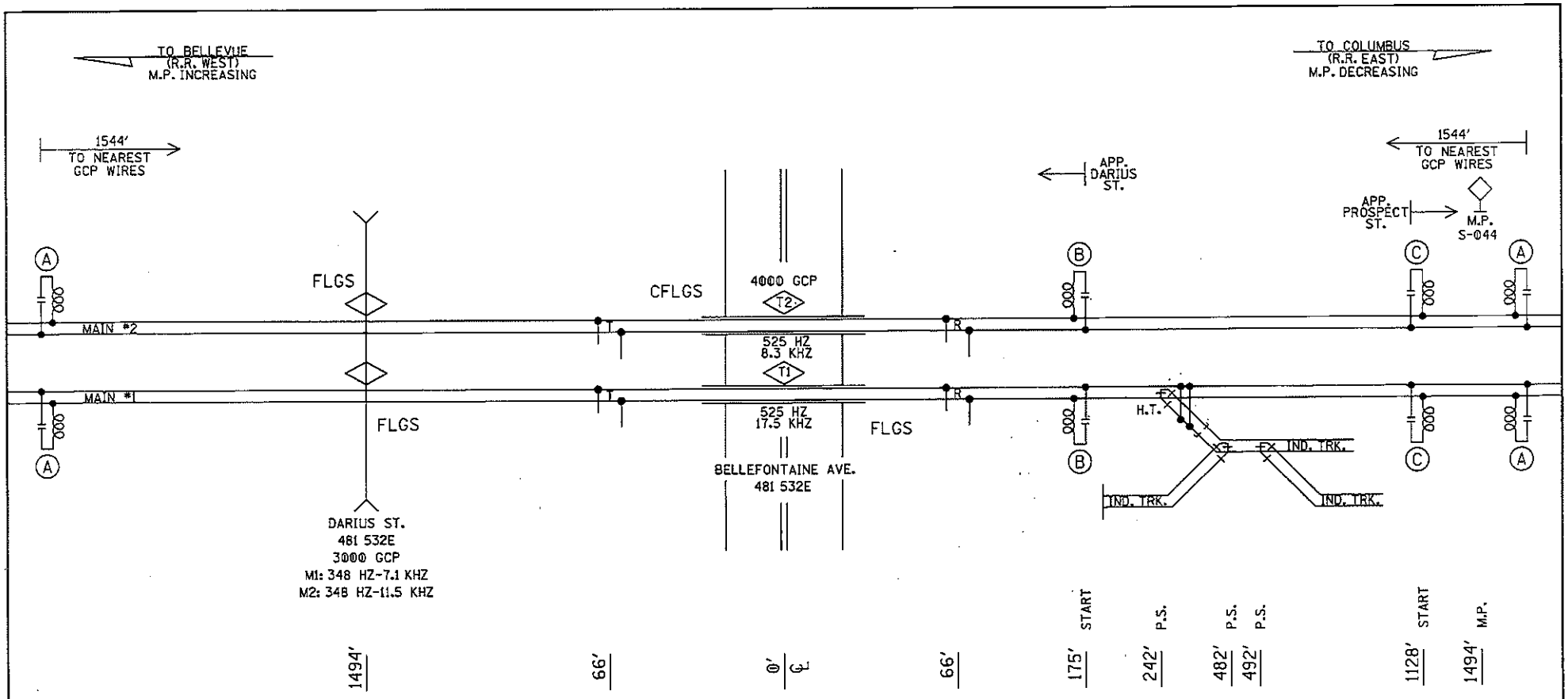

Ⓐ– MF-NBS 62775-3497 (525HZ)

Ⓑ– MF-NBS 62775-1543 (348HZ)

Ⓒ– MF-NBS 62775-1543 (285HZ)

PROFILE

DESIGNED BY: JWB 11-22-16	NORFOLK SOUTHERN		
DRAWN BY: IRE 11-22-16	OFFICE OF ASS'T. VICE PRESIDENT COMM. & SIGNAL, ATLANTA, GA.	M.P.: S-044.29	
CHECKED BY: DBS 12-01-16	MARION, OH CFLGS AT BELLEFONTAINE AVE.		
IN SERVICE: - -	SANDUSKY DISTRICT	FILE No. R-	
	CADD or DWG. No. SNCS04429.02	SHEET No. 2 of 23	

REVISION INITIALS

PROPERTY
NORFOLK SOUTHERN RAILWAY CO.

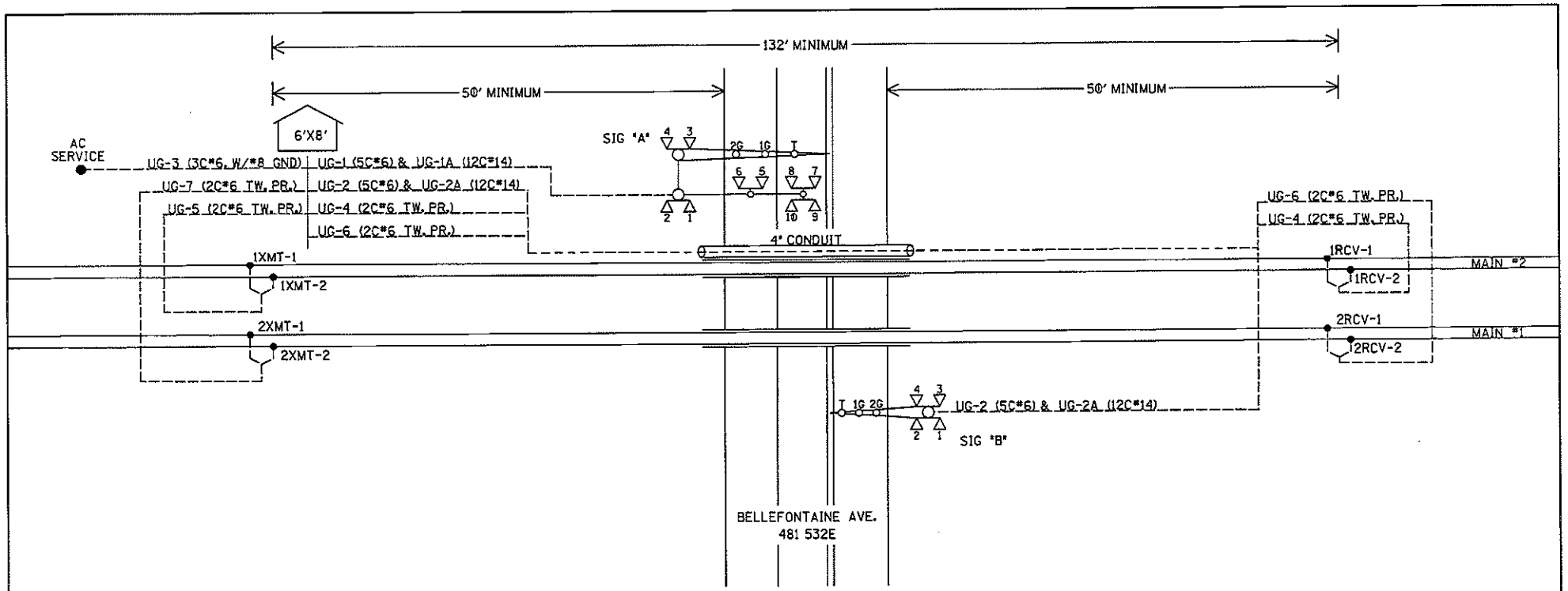

UG-1-5CUG #6
AEC
AEZ
AEB
B16-A
N16-A

UG-2-5CUG #6
BEC
BEZ
BEB
B16-B
N16-B

UG-1A-12CUG #14
NAXG
AXG
AXX
XGP1
AGD
AGBX120
AGNX120
SPARE
SPARE
SPARE
SPARE
SPARE

UG-2A-12CUG #14
NBXG
BXG
BXX
XGP1
XGP
BGD
BGBX120
BGNX120
SPARE
SPARE
SPARE
SPARE

UG-3-3CUG #6 W/#8 GND
BX120-A
BX120-B
NX120
GND

UG-4-TW. PR. #6
1RCV-1
1RCV-2

UG-5-TW. PR. #6
1XMT-1
1XMT-2

UG-6-TW. PR. #6
2RCV-1
2RCV-2

UG-7-TW. PR. #6
2XMT-1
2XMT-2

CABLE PLAN

DESIGNED BY: JWB 11-22-16	NORFOLK SOUTHERN
DRAWN BY: IRE 11-22-16	OFFICE OF ASS'T. VICE PRESIDENT COMM. & SIGNAL, ATLANTA, GA. — M.P.: S-044.29
CHECKED BY: DBS 12-01-16	MARION, OH CFLGS AT BELLEFONTAINE AVE.
IN SERVICE: - -	SANDUSKY DISTRICT — FILE No. R-
	CADD or DWG. No. SNCS04429.03 — SHEET No. 3 of 23

REVISION INITIALS

PROPERTY NORFOLK SOUTHERN RAILWAY CO.

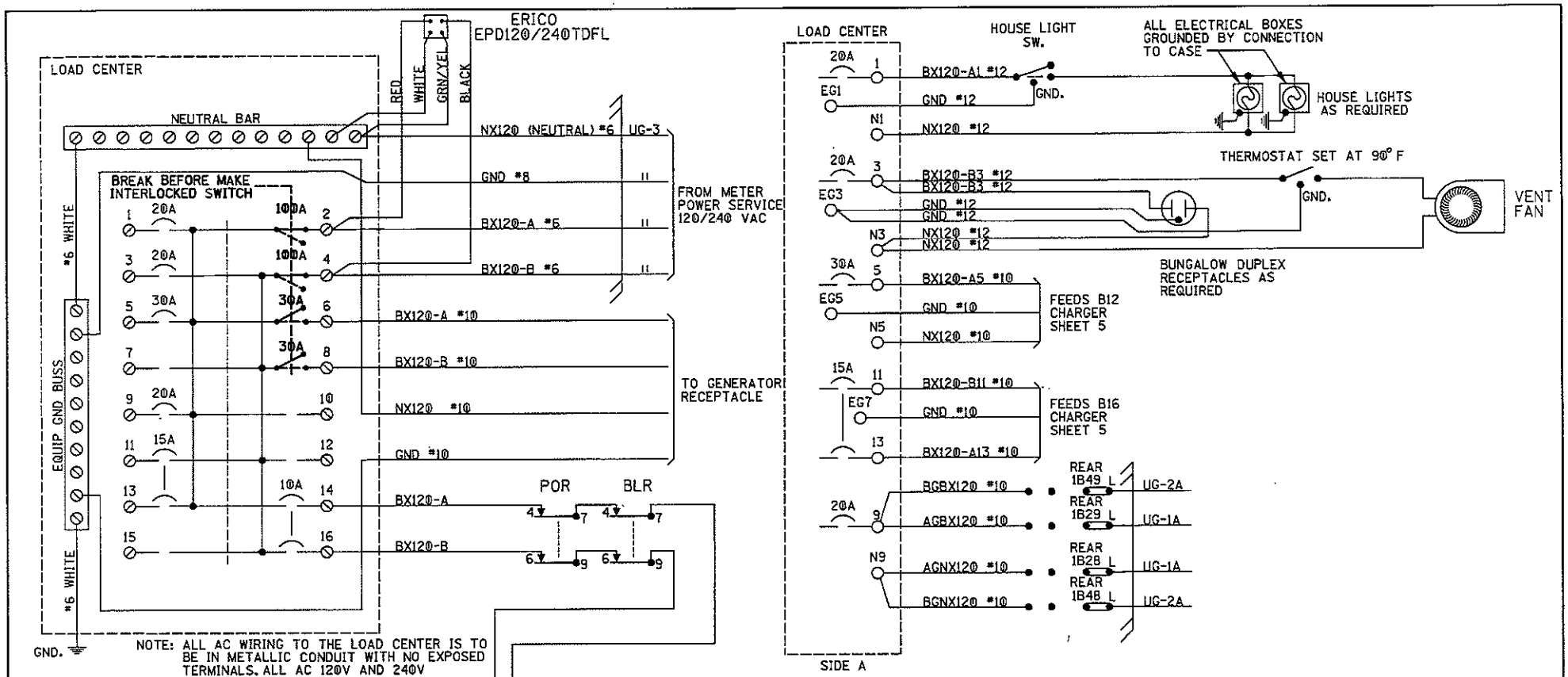

NOTE: ALL AC WIRING TO THE LOAD CENTER IS TO BE IN METALLIC CONDUIT WITH NO EXPOSED TERMINALS. ALL AC 120V AND 240V EQUIPMENT IS TO BE PROPERLY GROUNDED.

SQUARE "D" PART NUMBERS:

LOAD CENTER	Q0116L125G
10A 1P CIR BKR	Q0110
10A 2P CIR BKR	Q0210
15A 2P CIR BKR	Q0215
20A 1P CIR BKR	Q0120
30A 1P CIR BKR	Q0130
30A 2P CIR BKR	Q0230
40A 2P CIR BKR	Q0240
100A 2P CIR BKR	Q02100
MECH INTERLOCK	PK4DTIM4LA

NOTE:
ALL WIRING TO BE #16AWG
UNLESS NOTED OTHERWISE.

GENERATOR RECEPTACLE:
MALE CONNECTOR - NEMA L1430-FI

LOAD CENTER

DESIGNED BY: JWB 11-22-16	NORFOLK SOUTHERN		
DRAWN BY: IRE 11-22-16	OFFICE OF ASS'T. VICE PRESIDENT COMM. & SIGNAL, ATLANTA, GA.	M.P.: S-044.29	
CHECKED BY: DBS 12-01-16	MARION, OH CFLGS AT BELLEFONTAINE AVE.		
IN SERVICE: - -	SANDUSKY DISTRICT	FILE No. R-	
	CADD or DWG. No. SNCS04429.04	SHEET No. 4 of 23	

REVISION INITIALS

PROPERTY
NORFOLK SOUTHERN RAILWAY CO.

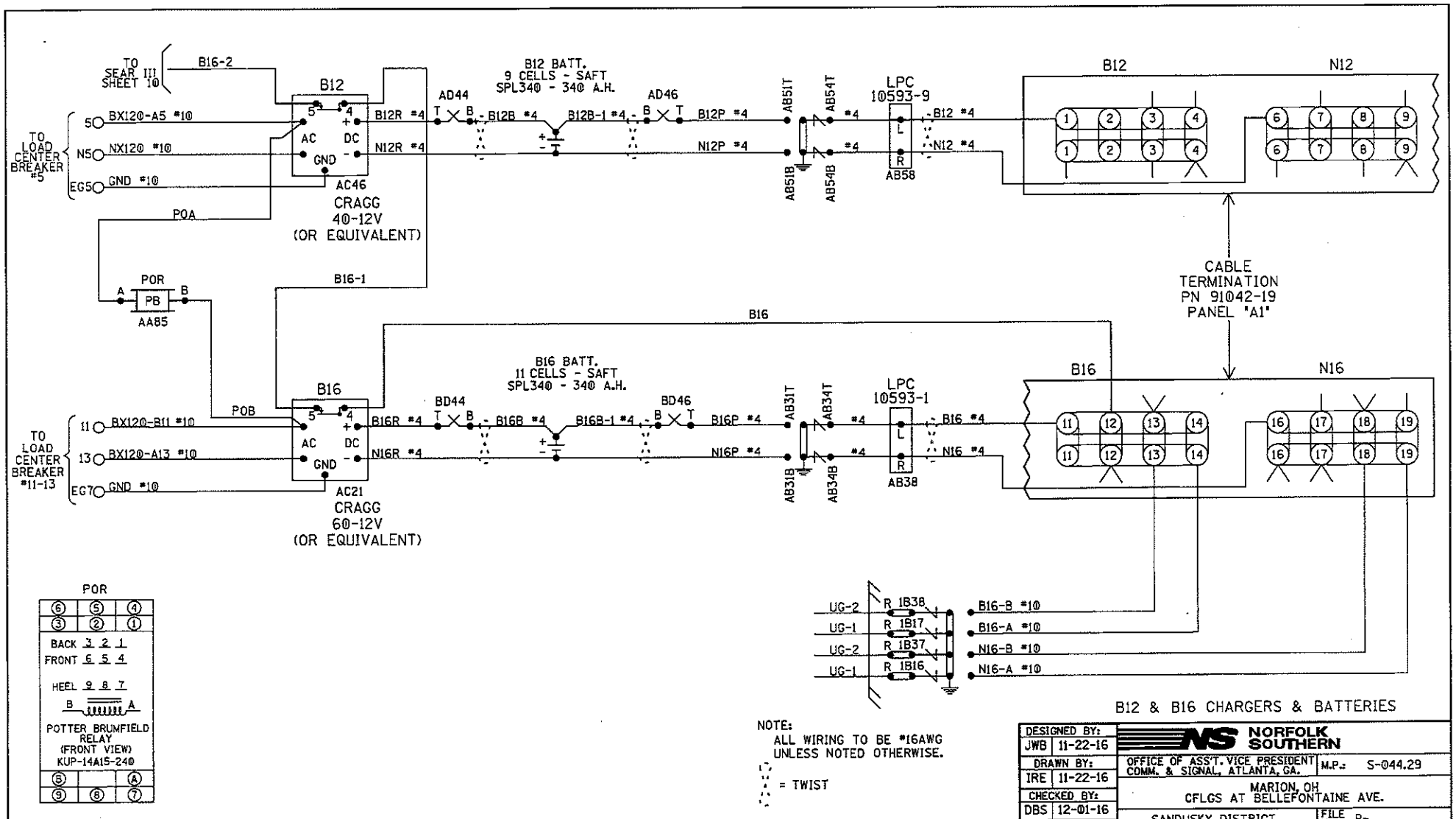
TO SEAR III SHEET 10
B16-2
B12
B12 BATT.
9 CELLS - SAFT
SPL340 - 340 A.H.
AD44
AD46
TO LOAD CENTER BREAKER #5
5
BX120-A5 #10
N5
NX120 #10
EG5
GND #10
AC
DC
GND
B12R #4
N12R #4
B12B #4
B12B-1 #4
B12P #4
N12P #4
AB51T
AB51B
AB54T
AB54B
#4
LPC
10593-9
L
R
AB58
B12 #4
N12 #4
AC46
CRAGG
40-12V
(OR EQUIVALENT)
POA
POR
PB
AA85
B16-1
B12
N12
CABLE
TERMINATION
PN 91042-19
PANEL 'A1'
B16
B16 BATT.
11 CELLS - SAFT
SPL340 - 340 A.H.
BD44
BD46
POB
TO LOAD CENTER BREAKER #11-13
11
BX120-B11 #10
13
BX120-A13 #10
EG7
GND #10
B16R #4
N16R #4
B16B #4
B16B-1 #4
B16P #4
N16P #4
AB31T
AB31B
AB34T
AB34B
LPC
10593-1
AB38
B16 #4
N16 #4
AC21
CRAGG
60-12V
(OR EQUIVALENT)
B16
N16
UG-2
UG-1
R 1B38
R 1B17
R 1B37
R 1B16
B16-B #10
B16-A #10
N16-B #10
N16-A #10
POR
BACK 3 2 1
FRONT 6 5 4
HEEL 9 8 7
POTTER BRUMFIELD
RELAY
(FRONT VIEW)
KUP-14A15-240
NOTE:
ALL WIRING TO BE #16AWG
UNLESS NOTED OTHERWISE.
= TWIST
B12 & B16 CHARGERS & BATTERIES
DESIGNED BY: JWB 11-22-16
DRAWN BY: IRE 11-22-16
CHECKED BY: DBS 12-01-16
IN SERVICE:
NORFOLK SOUTHERN
OFFICE OF ASS'T. VICE PRESIDENT COMM. & SIGNAL, ATLANTA, GA.
M.P.: S-044.29
MARION, OH
CFLGS AT BELLEFONTAINE AVE.
SANDUSKY DISTRICT
FILE No. R-
CADD or DWG. No. SNCS04429.05
SHEET No. 5 of 23
REVISION INITIALS
PROPERTY
NORFOLK SOUTHERN RAILWAY CO.

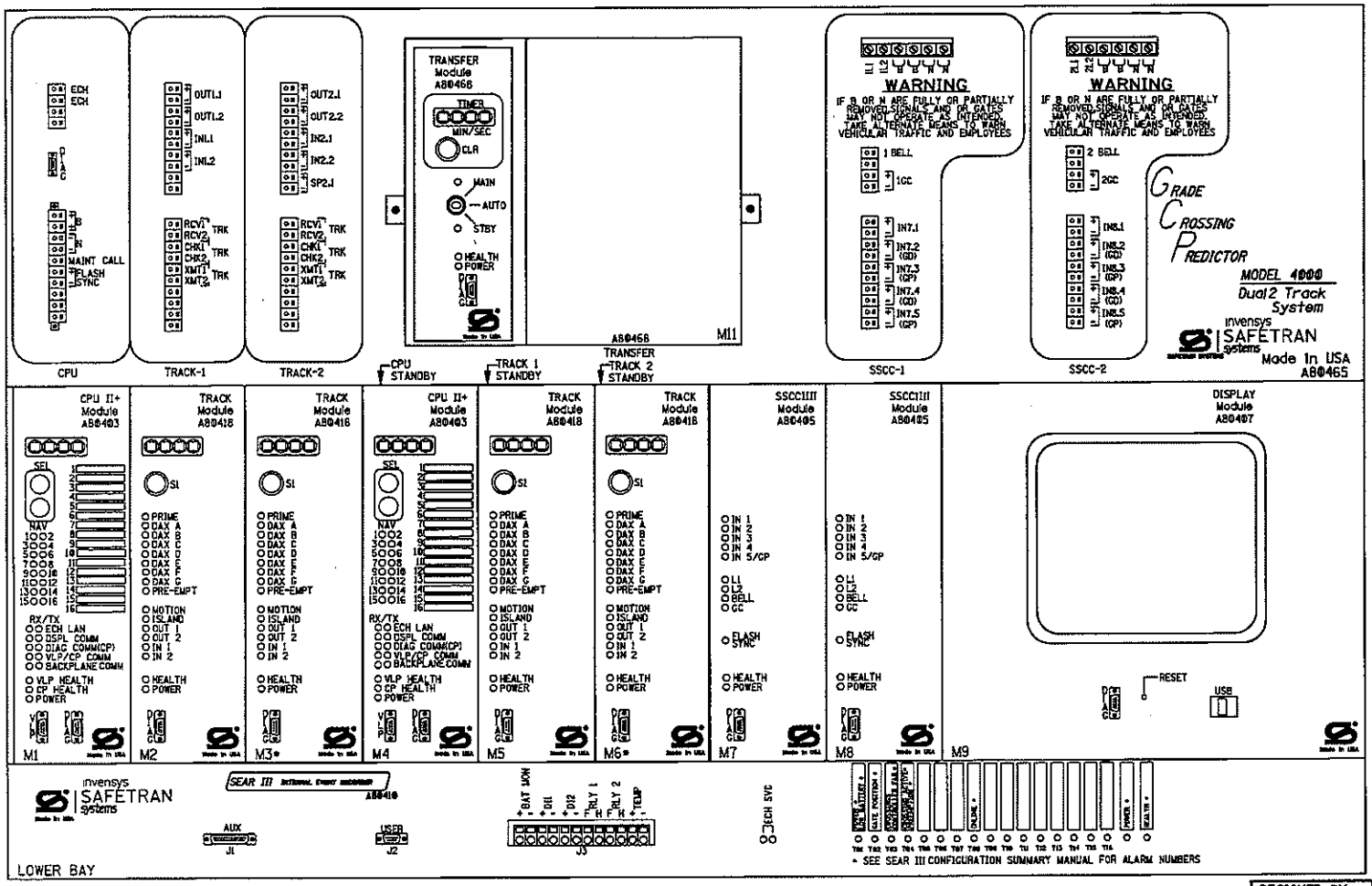

WARNING

REMOVAL OF THE SSCCIIII MODULE WILL CAUSE THE GATE(S) TO DROP BUT THE LIGHTS WILL NOT ACTIVATE

CAUTION

ASSURE CORRECT POLARITY OF THE SSCCIIII MODULE OR SEVERE DAMAGE WILL OCCUR.

ATTENTION!

ENSURE THE DISPLAY MODULE HEATER IS DISABLED. LEAVING THE DISPLAY HEATER ENABLED WILL REDUCE THE AMOUNT OF BATTERY STANDBY TIME IN THE EVENT OF AN AC POWER FAILURE.

HEATER FUNCTION IS JUMPER SELECTABLE ON THE DISPLAY MODULE BOARD.
THREE OPTIONS ARE AVAILABLE:
NORMAL LCD HTR (DEFAULT)
HI CURRENT
NO JUMPER (HEATER DISABLED)

* = MAIN AND STANDBY MAY USE RIO IN TRACK 2 SLOTS (M3 AND M6)

4000 GCP 2-TK CHASSIS & MODULE LAYOUT

DESIGNED BY: JWB 11-22-16	NORFOLK SOUTHERN		
DRAWN BY: IRE 11-22-16	OFFICE OF ASS'T. VICE PRESIDENT COMM. & SIGNAL, ATLANTA, GA.	M.P.: S-044.29	
CHECKED BY: DBS 12-01-16	MARION, OH CFLGS AT BELLEFONTAINE AVE.		
IN SERVICE: - -	SANDUSKY DISTRICT	FILE No. R-	
	CADD or DWG. No. SNCS04429.06	SHEET No. 6 of 23	

REVISION INITIALS

PROPERTY
NORFOLK SOUTHERN RAILWAY CO.

Program Report

Location and SIN

DOT Number: 481532E
Milepost Number: S-044.29
Site Name: BELLEFONTAINE AVE

SIN: 755023703816

MCF and Template Selection

MCF Name: GCP-T6X-02-1.mcf
MCF Revision: 021
MCFCRC: 6076E435

Template = 1A:6 Trk BI .

Check Numbers

Office Check No. (DT 4.6.0): 725E8886
Office Check Number: 725E8886
Config. Check Number: 18C8582A
(Based on MCF Revision 021)

Program

BASIC: module configuration
Track 1 Slot = Track
Track 2/RIO 1 Slot = Track
Track 3 Slot = Not Used
Track 4 Slot = Not Used
Track 5/RIO 2 Slot = Not Used
Track 6/RIO 3 Slot = Not Used
SSCC-1 Slot = SSCC31
SSCC-2 Slot = SSCC31
SEAR Used = Yes

BASIC: MS/GCP operation
Track 1 : MS/GCP Operation = Yes
Track 2 : MS/GCP Operation = Yes

BASIC: Island operation
Track 1 : Island Used = Internal
Track 2 : Island Used = Internal

BASIC: preemption
Preempt Logic = No

BASIC: radio Dax links
Radio DAX link A Used = No
Radio DAX link B Used = No

BASIC: Vital Comms links
Vital Comms link 1 Used = No
Vital Comms link 2 Used = No

PREDICTORS: track 1
Track 1 : Prime Used = Yes
Track 1 : Dax A Used = No
Track 1 : Dax B Used = No
Track 1 : Dax C Used = No
Track 1 : Dax D Used = No
Track 1 : Dax E Used = No
Track 1 : Dax F Used = No
Track 1 : Dax G Used = No

PREDICTORS: track 2
Track 2 : Prime Used = Yes
Track 2 : Dax A Used = No
Track 2 : Dax B Used = No
Track 2 : Dax C Used = No
Track 2 : Dax D Used = No
Track 2 : Dax E Used = No
Track 2 : Dax F Used = No
Track 2 : Dax G Used = No

GCP: track 1
Track 1 : GCP Freq Category = Standard
Track 1 : GCP Frequency = 525 Hz
Track 1 : Approach Distance = 1544 ft
Track 1 : Uni/Bi/Sim-Bidirni = Bidirni
Track 1 : GCP Transmit Level = Medium
Track 1 : Island Connection = Isl1
Track 1 : Island Distance = 132 ft
Track 1 : Computed Distance = 9999 ft
Track 1 : Linearization Steps = 100

GCP: track 1 enhanced det
Track 1 : Inbound PS Sensitivity = Off
Track 1 : Speed Limiting Used = Yes
Track 1 : Outbound False Act Lvl = Normal
Track 1 : Outbound PS Timer = 20 sec
Track 1 : Trailing Switch Logic = On
Track 1 : Post Joint Detn Time = 15 sec
Track 1 : Adv Appr Predn = No
Track 1 : CancelPickup Delay = This Isl

GCP: track 1 prime
Track 1 : Prime Warning Time = 30 sec
Track 1 : Prime Offset Distance = 0 ft
Track 1 : Switch MS EZ Level = 10
Track 1 : Prime MS/GCP Mode = Pred
Track 1 : Prime Pickup Delay = 15 sec
Track 1 : Prime UAX = Not Used

GCP: track 1 pos start
Track 1 : Positive Start = Off
Track 1 : Sudden Shnt Det Used = No
Track 1 : Low EZ Detection Used = No

GCP: track 1 MS Control
Track 1 : MS/GCP CtrlIP Used = No
Track 1 : MS Sensitivity Level = 0
Track 1 : Compensation Level = 1300
Track 1 : Warn Time-Ballast Comp = High
Track 1 : Low EX Adjustment = 39
Track 1 : Bidirn Dax Passthru = No
Track 1 : False Act on Train Stop = No
Track 1 : EX Limiting Used = Yes
Track 1 : EZ Correction Used = Yes

GCP: track 2
Track 2 : GCP Freq Category = Standard
Track 2 : GCP Frequency = 525 Hz
Track 2 : Approach Distance = 1544 ft
Track 2 : Uni/Bi/Sim-Bidirni = Bidirni
Track 2 : GCP Transmit Level = Medium
Track 2 : Island Connection = Isl2
Track 2 : Island Distance = 132 ft
Track 2 : Computed Distance = 9999 ft
Track 2 : Linearization Steps = 100

GCP: track 2 enhanced det
Track 2 : Inbound PS Sensitivity = Off
Track 2 : Speed Limiting Used = Yes
Track 2 : Outbound False Act Lvl = Normal
Track 2 : Outbound PS Timer = 20 sec
Track 2 : Trailing Switch Logic = On
Track 2 : Post Joint Detn Time = 15 sec
Track 2 : Adv Appr Predn = No
Track 2 : CancelPickup Delay = This Isl

GCP: track 2 prime
Track 2 : Prime Warning Time = 30 sec
Track 2 : Prime Offset Distance = 0 ft
Track 2 : Switch MS EZ Level = 10
Track 2 : Prime MS/GCP Mode = Pred
Track 2 : Prime Pickup Delay = 15 sec
Track 2 : Prime UAX = Not Used

GCP: track 2 pos start
Track 2 : Positive Start = Off
Track 2 : Sudden Shnt Det Used = No
Track 2 : Low EZ Detection Used = No

GCP: track 2 MS Control
Track 2 : MS/GCP CtrlIP Used = No
Track 2 : MS Sensitivity Level = 0
Track 2 : Compensation Level = 1300
Track 2 : Warn Time-Ballast Comp = High
Track 2 : Low EX Adjustment = 39
Track 2 : Bidirn Dax Passthru = No
Track 2 : False Act on Train Stop = No
Track 2 : EX Limiting Used = Yes
Track 2 : EZ Correction Used = Yes

ISLAND: track 1
Track 1 : IslFrequency = 17.5 kHz
Track 1 : Pickup Delay (2s +) = 0 sec
Track 1 : IslEnable IP Used = No

ISLAND: track 2
Track 2 : IslFrequency = 8.3 kHz
Track 2 : Pickup Delay (2s +) = 0 sec
Track 2 : IslEnable IP Used = No

AND: track Anding
AND 1 XR Used = Yes
AND 2 Used = No
AND 3 Used = No
AND 4 Used = No
AND 5 Used = No
AND 6 Used = No
AND 7 Used = No
AND 8 Used = No

AND: AND 1 XR
AND 1 XR Track 1 = Prime
AND 1 XR Track 2 = Prime
AND 1 Enable Used = Yes
And 1 Enable Pickup = 5 sec
AND 1 Enable Drop = 0 sec
AND 1 Wrap Used = No

ADVANCED: MS restart
MS/GCP Restart Used = No

ADVANCED: out of service
OOS Control = Display+OOS IPs
OOS Timeout = Yes
OOS Timeout = 1 hrs

ADVANCED: out of service 2
T1 OOS Control = OOS Input 1
T2 OOS Control = OOS Input 1

ADVANCED: track wrap circuits
Wrap LOS Timer = 5 sec
Track 1 Wrap Used = No
Track 2 Wrap Used = No

ADVANCED: trk 1 overrides
Track 1 : AllPredictors Override Used = No

ADVANCED: trk 2 overrides
Track 2 : AllPredictors Override Used = No

4000 GCP PROGRAMMING SETUP

DESIGNED BY: JWB 11-22-16	NORFOLK SOUTHERN		
DRAWN BY: IRE 11-22-16	OFFICE OF ASS'T. VICE PRESIDENT COMM. & SIGNAL, ATLANTA, GA.	M.P.: S-044.29	
CHECKED BY: DBS 12-01-16	MARION, OH CFLGS AT BELLEFONTAINE AVE.		
IN SERVICE: - -	SANDUSKY DISTRICT	FILE No. R-	
	CADD or DWG. No. SNCS04429.07	SHEET No. 7 of 23	

REVISION INITIALS

PROPERTY
NORFOLK SOUTHERN RAILWAY CO.

ADVANCED: OR logic
OR 1 Used = No
OR 2 Used = No
OR 3 Used = No
OR 4 Used = No

ADVANCED: Internal I/O 1
Pass Thrus = No
Int.1 Sets = Not Used
Int.1 Set by = Not Used
Int.2 Sets = Not Used
Int.2 Set by = Not Used
Int.3 Sets = Not Used
Int.3 Set by = Not Used
Int.4 Sets = Not Used
Int.4 Set by = Not Used

ADVANCED: Internal I/O 2
Int.5 Sets = Not Used
Int.5 Set by = Not Used
Int.6 Sets = Not Used
Int.6 Set by = Not Used
Int.7 Sets = Not Used
Int.7 Set by = Not Used
Int.8 Sets = Not Used
Int.8 Set by = Not Used

ADVANCED: Internal I/O 3
Int.9 Sets = Not Used
Int.9 Set by = Not Used
Int.10 Sets = Not Used
Int.10 Set by = Not Used
Int.11 Sets = Not Used
Int.11 Set by = Not Used
Int.12 Sets = Not Used
Int.12 Set by = Not Used

ADVANCED: Internal I/O 4
Int.13 Sets = Not Used
Int.13 Set by = Not Used
Int.14 Sets = Not Used
Int.14 Set by = Not Used
Int.15 Sets = Not Used
Int.15 Set by = Not Used
Int.16 Sets = Not Used
Int.16 Set by = Not Used

ADVANCED: site options
Daylight Savings = On
Units = Standard
Maint Call Rpt IP Used = No
Emergency Activate IP = No
EZ/EX Logging = Change
EZ/EX Point Change = 3

SSCC
Gates Used = Yes
SSCC1+2 GPs Coupled = Yes
Min Activation = 0 sec
Rmt Activation Cancel= 2 min
Bell On Gate Rising = No
Mute Bell On Gate Down = No
SSCCIV Controller Used = No

SSCC: 1
SSCC-1 Activation = AND 1 XR
SSCC-1 Gate Delay = 6 sec
SSCC-1 Number of GPs = 1
SSCC-1 Number of GDs = 2
SSCC 1 : Flash Rate = 40
SSCC 1 : Low Battery Detection = No
SSCC 1 : Flash Sync = master
SSCC 1 : Invert Gate Output = No
SSCC 1 : Lamp Neutral Test = Off
Aux-1 Xng Ctrl Used = No

SSCC: 2
SSCC-2 Activation = AND 1 XR
SSCC-2 Gate Delay = 6 sec
SSCC-2 Number of GPs = 0
SSCC-2 Number of GDs = 0
SSCC 2 : Flash Rate = 40
SSCC 2 : Low Battery Detection = No
SSCC 2 : Flash Sync = slave
SSCC 2 : Invert Gate Output = No
SSCC 2 : Lamp Neutral Test = Off
Aux-2 Xng Ctrl Used = No

OUTPUT: assignment page 1
OUT 1.1 = Not Used
OUT 1.2 = Not Used
OUT 2.1 = Not Used
OUT 2.2 = Not Used

INPUT: assignment page 1
IN 1.1 = Not Used
IN 1.2 = Not Used
IN 2.1 = Not Used
IN 2.2 = Not Used

IO: assignment SSCC
OUT GC 1 = Gate Output 1
OUT GC 2 = Gate Output 2
IN 7.1 = Not Used
IN 7.2 = GD 1.2
IN 7.3 = AND 1 XR Enable
IN 7.4 = GD 1.1
IN 7.5 = GP 1.1
IN 8.1 = Out Of Service IP 1
IN 8.2 = Not Used
IN 8.3 = Not Used
IN 8.4 = Not Used
IN 8.5 = Not Used

SEAR
SEAR Subnode = 3
DI 1 = Not Used
DI 2 = Not Used
Rly 1 = General1
Rly 2 = Not Used

SEAR: inputs
SP 2.1 = POK 1
SP 3.1 = Not Used
SP 4.1 = Not Used
SP 5.1 = Not Used
SP 6.1 = Not Used

SEAR: slot 1-4 Inputs
IN 1.1 = Not Used
IN 1.2 = Not Used
IN 2.1 = Not Used
IN 2.2 = Not Used
IN 3.1 = Not Used
IN 3.2 = Not Used
IN 4.1 = Not Used
IN 4.2 = Not Used

SEAR: Inputs slot 5
IN 5.1 = Not Used
IN 5.2 = Not Used

SEAR: Inputs slot 6
IN 6.1 = Not Used
IN 6.2 = Not Used

SEAR: slot 7-8 Inputs
IN 7.1 = Not Used
IN 8.2 = Not Used
IN 8.3 = Not Used
IN 8.4 = Not Used
IN 8.5 = Not Used

SITE: programming
Radio Subnode = 1
Field Password = Off
Low Battery Enabled = Off

Configuration Package File

Filename: SNCS04429.pac

4000 GCP PROGRAMMING SETUP

DESIGNED BY: JWB 11-22-16	NORFOLK SOUTHERN		
DRAWN BY: IRE 11-22-16	OFFICE OF ASS'T. VICE PRESIDENT COMM. & SIGNAL, ATLANTA, GA.	M.P.: S-044.29	
CHECKED BY: DBS 12-01-16	MARION, OH CFLGS AT BELLEFONTAINE AVE.		
IN SERVICE: - -	SANDUSKY DISTRICT	FILE No. R-	
	CADD or DWG. No. SNCS04429.08	SHEET No. 8 of 23	

REVISION INITIALS

PROPERTY
NORFOLK SOUTHERN RAILWAY CO.

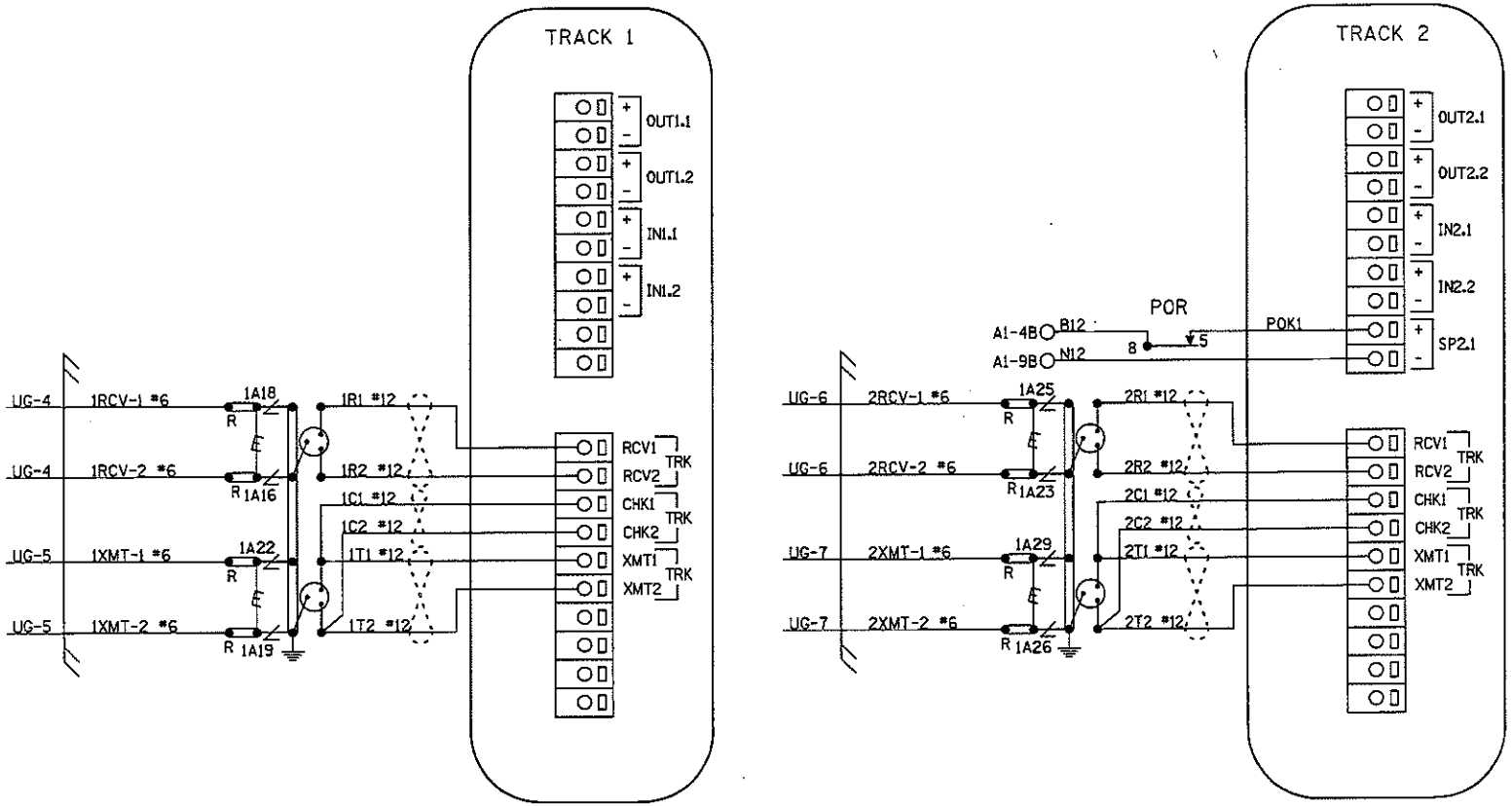

NOTES:
ALL WIRING TO BE #16AWG
UNLESS NOTED OTHERWISE.

= TWIST

CONNECTORS FOR TRACK MODULES

DESIGNED BY: JWB 11-22-16	NORFOLK SOUTHERN		
DRAWN BY: IRE 11-22-16	OFFICE OF ASS'T. VICE PRESIDENT COMM. & SIGNAL, ATLANTA, GA.	M.P.: S-044.29	
CHECKED BY: DBS 12-01-16	MARION, OH CFLGS AT BELLEFONTAINE AVE.		
IN SERVICE: - -	SANDUSKY DISTRICT	FILE No. R-	
	CADD or DWG. No. SNCS04429.09	SHEET No. 9 of 23	

REVISION INITIALS

PROPERTY
NORFOLK SOUTHERN RAILWAY CO.

• SEE SEAR III CONFIGURATION SUMMARY MANUAL FOR ALARM NUMBERS

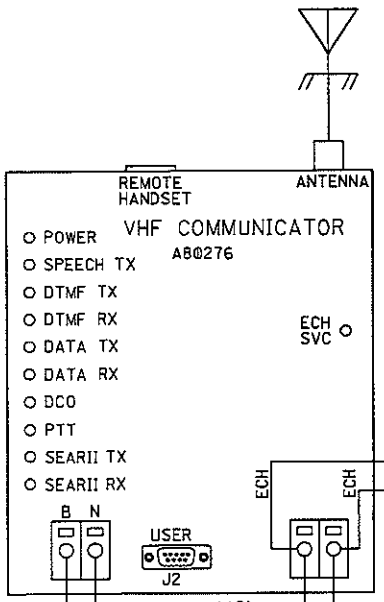

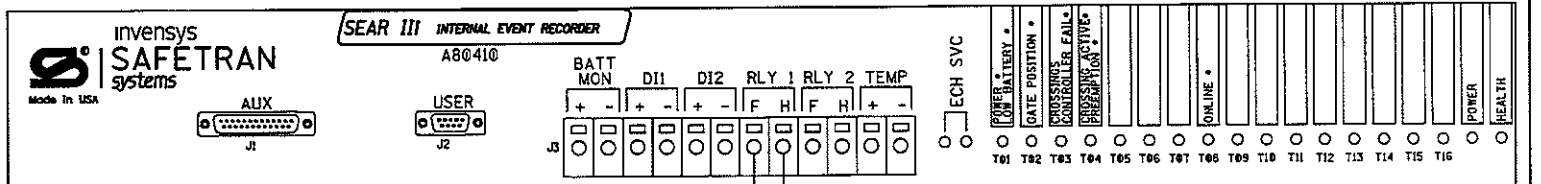

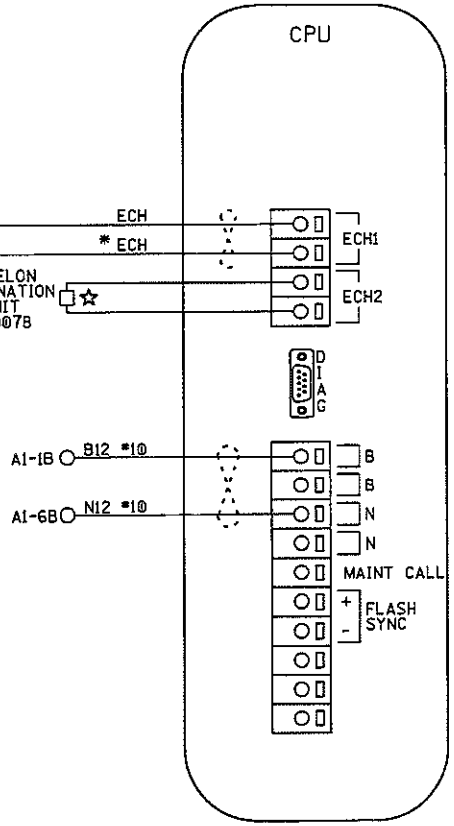

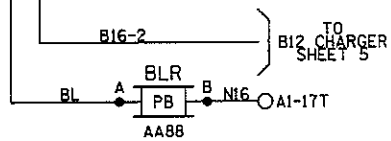

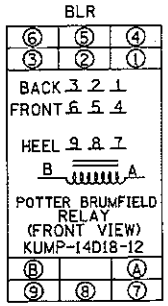

GCP PROGRAMMING FOR VHF RADIO

REMOTE DTMF CROSSING ACTIVATION
(ACTIVATES ENTIRE CROSSING)

TO ACTIVATE PRESS: 532*

TO DE-ACTIVATE PRESS: 532•

(ACTIVATION WILL TIME OUT AFTER 60 SEC.)

REMOTE DTMF LIGHTING ACTIVATION
(ACTIVATES FLASHING LIGHTS ONLY)

TO ACTIVATE PRESS: 5321*

TO DE-ACTIVATE PRESS: 5321•

(ACTIVATION WILL TIME OUT AFTER 60 SEC.)

NOTES:

ALL WIRING TO BE #16AWG UNLESS NOTED OTHERWISE.

* = ECHELON CONNECTIONS NOT TO EXCEED 53' IN LENGTH AND TOTAL LENGTH NOT TO EXCEED 430' WITH A MAXIMUM OF 8 NODES, RECOMMEND USE BELDEN WIRE CABLE #8461 OR EQUIVALENT.

☆ = A80078 ECHELON TERMINATION UNIT TO TERMINATE ECHELON NETWORK.

= TWIST

CPU MODULE, SEAR III & VHF HOOK-UPS

DESIGNED BY: JWB 11-22-16	NORFOLK SOUTHERN		
DRAWN BY: IRE 11-22-16	OFFICE OF ASS'T. VICE PRESIDENT COMM. & SIGNAL, ATLANTA, GA.	M.P.: S-044.29	
CHECKED BY: DBS 12-01-16	MARION, OH CFLGS AT BELLEFONTAINE AVE.		
IN SERVICE: - -	SANDUSKY DISTRICT	FILE No. R-	
	CADD or DWG. No. SNCS04429.10	SHEET No. 10 of 23	

REVISION INITIALS

PROPERTY NORFOLK SOUTHERN RAILWAY CO.

	SITE SET UP PROCEDURE	
	FUNCTION	LED DISPLAY
	DATE/TIME	
	AUTOMATIC DST ADJUSTMENT	YES
	TIME ZONE	EST
	SITE NAME	BELLEFONTAINE AVE.
	MILEPOST	S-044.29
	DOT #	481532E
	TESTER TYPE	CROSSING
	DATE FORMAT	MM-DD-YYYY
	TEMP FORMAT	FAHRENHEIT
	INDICATE HOLD (SEC)	0
	INDICATE REFRESH (SEC)	60
	SITE ATCS	7.550.237.038.03.01
	SITE TYPE	NO COMMUNICATION
••	OFFICE ATCS ADDRESS	2.550.00.0000
••	PRIMARY HOP ADDR	7.RRR.LLL.GGG.XX.XX
••	BACKUP HOP ADDR 1	7.RRR.LLL.GGG.XX.XX
••	BACKUP HOP ADDR 2	7.RRR.LLL.GGG.XX.XX
••	POLL ID	1
••	MODE	GEN/ATCS
••	WAMS XID	DISABLED
••	OFFICE COMM DEVICE	MCM (ECHELON)
••	RADIO ATCS ADDR	7.RRR.LLL.GGG.01.01
••	PHONE #	(OFFICE NUMBER)
••	INIT STRING	
••	FIELD COMM DEVICE	NONE
•••	USER PORT BAUD	57600
•••	USER PORT DATA BITS	8
•••	USER PORT PARITY	NONE
•••	USER PORT STOP BITS	1
•••	USER PORT FLOW CONTROL	NONE
•••	AUX PORT BAUD	9600
•••	AUX PORT DATA BITS	8
•••	AUX PORT PARITY	NONE
•••	AUX PORT STOP BITS	1
•••	AUX PORT FLOW CONTROL	NONE

	CONTROL SYSTEM CONFIGURATION MENU QUESTIONS	
	THE QUESTION	SELECT FROM MENU OPTION
	RESET NAMES AND MODULES?	YES
	RAILROAD NUMBER	550
	CROSSING CONFIGURATION	NORMAL
	AND 1 USED AS XR?	YES
	AND 2 USED AS XR?	NO
	AND 3 USED AS XR?	NO
	AND 4 USED AS XR?	NO
	AND 5 USED AS XR?	NO
	AND 6 USED AS XR?	NO
	AND 7 USED AS XR?	NO
	AND 8 USED AS XR?	NO
•	XR CONTROLLED BY FOREIGN RR	
	ENTRANCE GATES	2
	85% VOLTAGE RELAY OUT	YES
•	GATES CONTROLLED BY FOREIGN RR	
	BATTERY BANKS	2
	BATTERY MON USED	NO
	PREEMPTION	NO
	INTERNAL CROSSING CONTROLLERS	2
	EXTERNAL CROSSING CONTROLLERS	0
	VHF COMMUNICATOR	YES
	DTMF ACTIVATION	YES
••••	ACTIVATION CODE	532
	ACTIVATION TIMEOUT (SECONDS)	60
	ILOD MODULES	0
•••••	ANY LED BULBS USED	
	VHF VOICE CHANNEL	2
	VHF DATA CHANNEL	2
	USE CELL MODEM NON-CRITICAL FEATURE	NO

PROGRAM MENU QUESTIONS	PROGRAM
EDIT DIGITAL INPUTS	NO
EDIT BATTERIES	NO
EDIT RELAYS	NO
EDIT INDICATOR LEDS	NO
EDIT TEST LEDS	NO
EDIT ILOD SENSORS	NO
EDIT VHF SETTINGS	NO
GCP4K ATCS SUBNODE	16

NOTES:

• = DISPLAYED IF CROSSING CONFIGURATION IS SPLIT GATE.

•• = IF SITE TYPE = NO COMMUNICATION, THEN THESE OPTIONS ARE NOT DISPLAYED.

••• = THESE SETTINGS SHOULD BE LEFT AT THE DEFAULT SETTING.

•••• = USE LAST 3 NUMBERS FROM DOT NUMBER.

••••• = IF ILOD MODULE >0.

TO CONFIGURE SEARIII PRESS SITE SETUP KEY.
USE ARROW KEYS TO MAKE SELECTION.
PRESS ENTER AFTER SELECTION HAS BEEN MADE.

SEAR III PROGRAMMING SETUP

DESIGNED BY: JWB 11-22-16	NORFOLK SOUTHERN	
DRAWN BY: IRE 11-22-16	OFFICE OF ASS'T. VICE PRESIDENT COMM. & SIGNAL, ATLANTA, GA.	M.P.: S-044.29
CHECKED BY: DBS 12-01-16	MARION, OH CFLGS AT BELLEFONTAINE AVE.	
IN SERVICE: - -	SANDUSKY DISTRICT	FILE No. R-
	CADD or DWG. No. SNCS04429.11	SHEET No. 11 of 23

REVISION INITIALS

PROPERTY NORFOLK SOUTHERN RAILWAY CO.

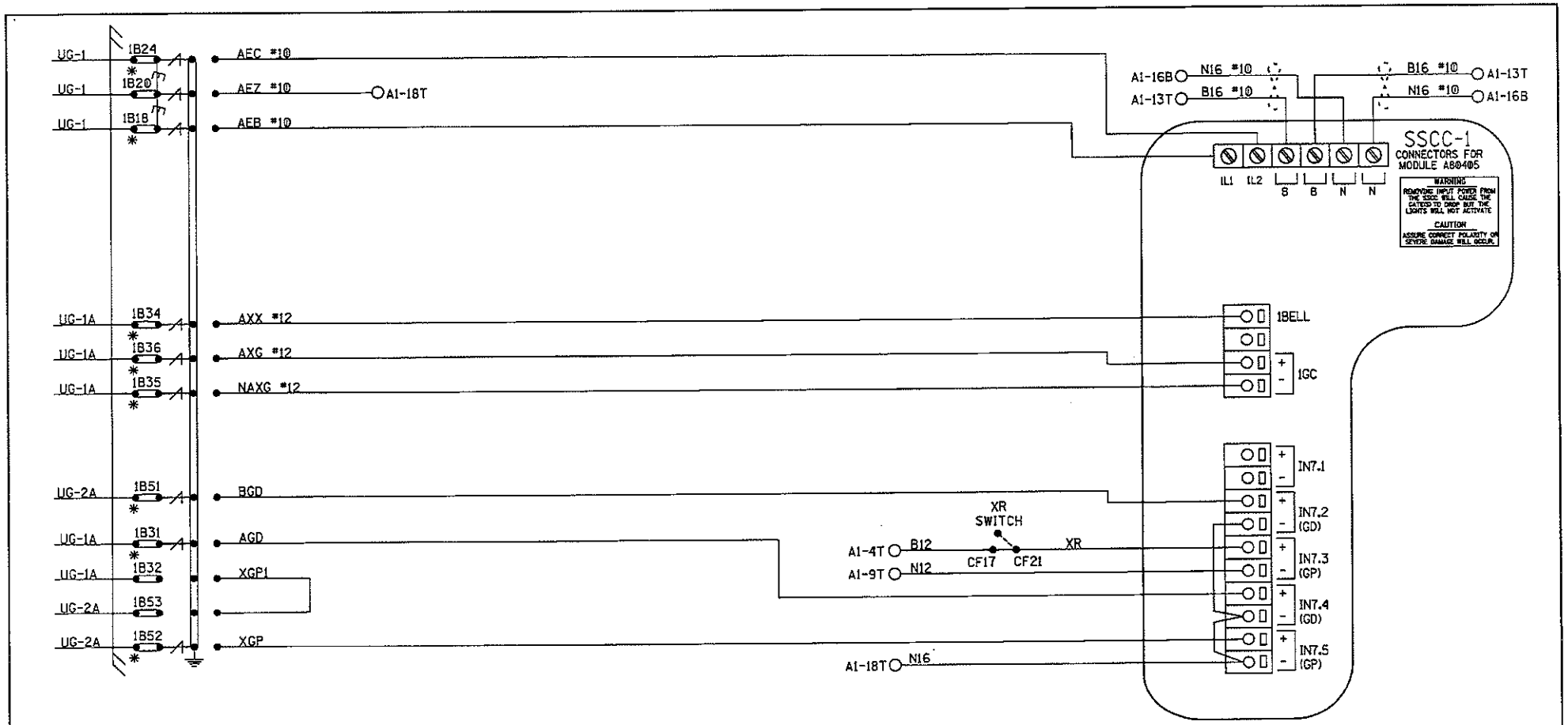

NOTES: ALL WIRING TO BE #16AWG UNLESS NOTED OTHERWISE.

*= TEST LINKS MUST BE OPENED TEMPORARILY FOR NEW COLD START OF NEW OR REPLACEMENT SSCC MODULE AND CAN ONLY BE CLOSED IN SEQUENCE WITH MFR. INSTRUCTIONS: SECTION 6 OF THE GCP 4000 REFERENCE MANUAL.

= TWIST

SSCC#1 MODULE HOOK-UP

DESIGNED BY: JWB 11-22-16	NORFOLK SOUTHERN
DRAWN BY: IRE 11-22-16	OFFICE OF ASS'T. VICE PRESIDENT COMM. & SIGNAL, ATLANTA, GA. — M.P.: S-044.29
CHECKED BY: DBS 12-01-16	MARION, OH CFLGS AT BELLEFONTAINE AVE.
IN SERVICE: - -	SANDUSKY DISTRICT — FILE No. R-
	CADD or DWG. No. SNCS04429.12 — SHEET No. 12 of 23

REVISION INITIALS

PROPERTY NORFOLK SOUTHERN RAILWAY CO.

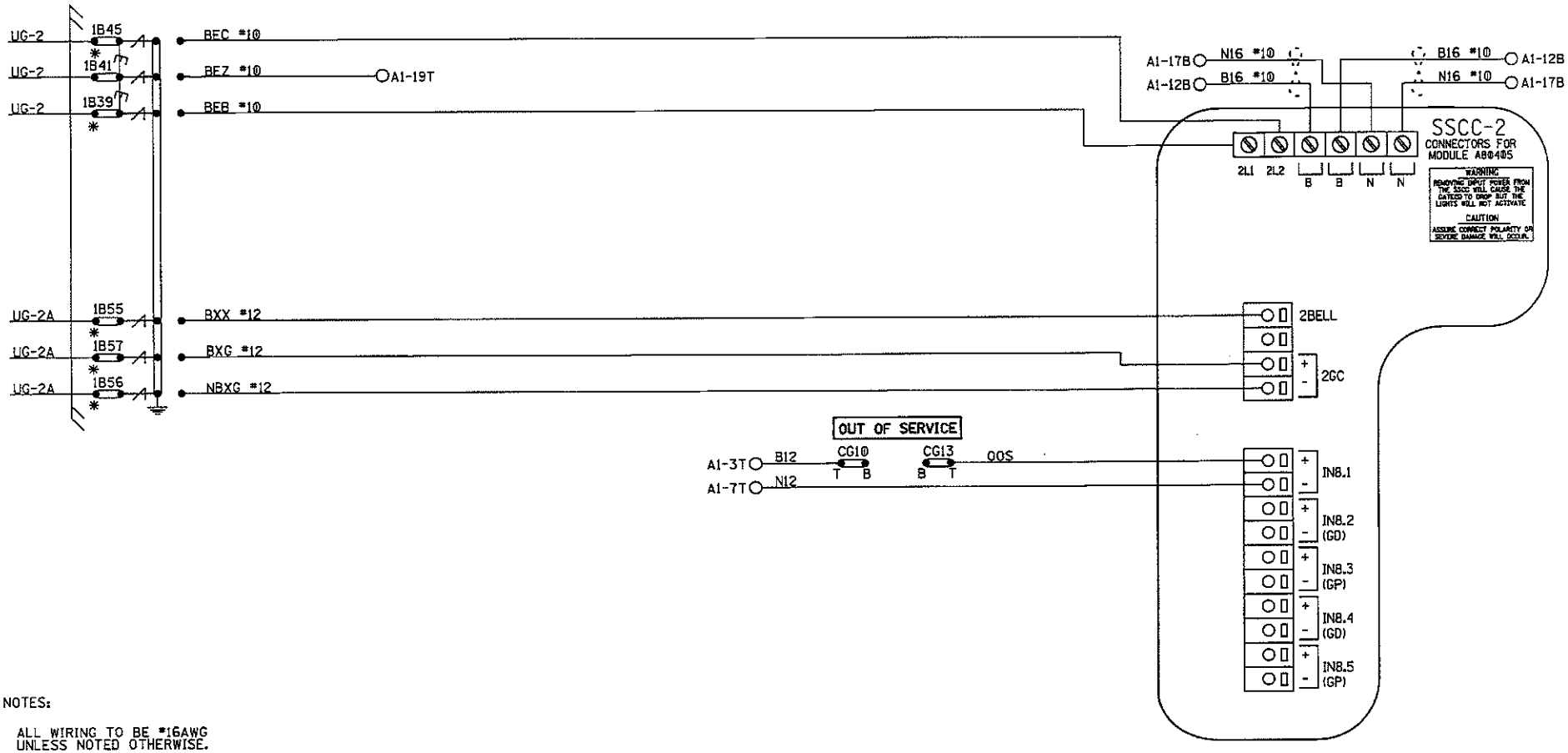

NOTES:

ALL WIRING TO BE #16AWG
UNLESS NOTED OTHERWISE.

* = TEST LINKS MUST BE OPENED TEMPORARILY FOR NEW COLD START OF NEW OR REPLACEMENT SSCC MODULE AND CAN ONLY BE CLOSED IN SEQUENCE WITH MFR. INSTRUCTIONS: SECTION B OF THE GCP 4000 REFERENCE MANUAL.

= TWIST

SSCC#2 MODULE HOOK-UP

DESIGNED BY: JWB 11-22-16	NORFOLK SOUTHERN		
DRAWN BY: IRE 11-22-16	OFFICE OF ASS'T. VICE PRESIDENT COMM. & SIGNAL, ATLANTA, GA.	M.P.: S-044.29	
CHECKED BY: DBS 12-01-16	MARION, OH CFLGS AT BELLEFONTAINE AVE.		
IN SERVICE: - -	SANDUSKY DISTRICT	FILE No. R-	
	CADD or DWG. No. SNCS04429.13	SHEET No. 13 of 23	

REVISION INITIALS

PROPERTY
NORFOLK SOUTHERN RAILWAY CO.

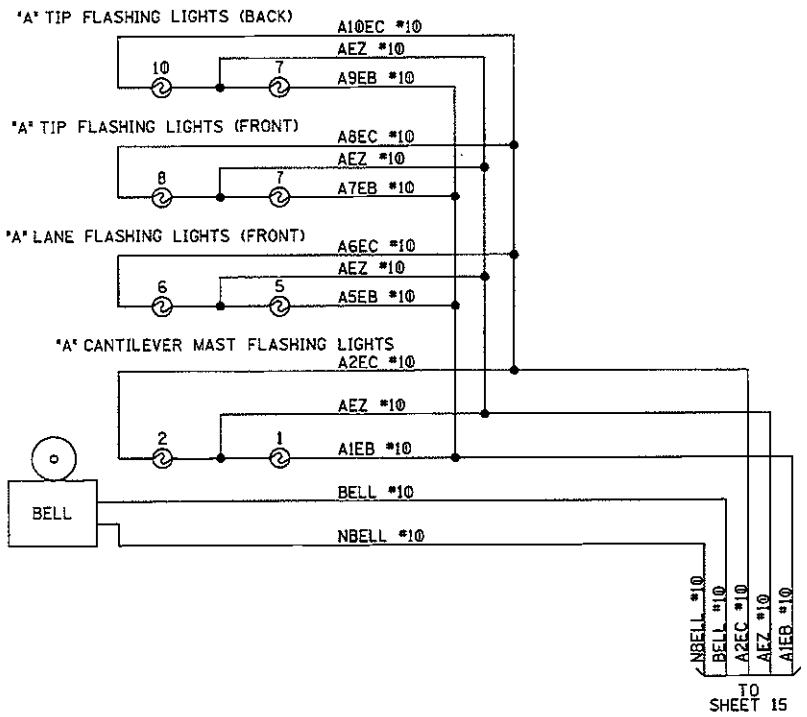

CANTILEVER FLASHER LIGHTS

DESIGNED BY: JWB 11-22-16	NORFOLK SOUTHERN		
DRAWN BY: IRE 11-22-16	OFFICE OF ASS'T. VICE PRESIDENT COMM. & SIGNAL, ATLANTA, GA.	M.P.: S-044.29	
CHECKED BY: DBS 12-01-16	MARION, OH CFLGS AT BELLEFONTAINE AVE.		
IN SERVICE: - -	SANDUSKY DISTRICT	FILE No. R-	
	CADD or DWG. No. SNCS04429.14	SHEET No. 14 of 23	

REVISION INITIALS

PROPERTY
NORFOLK SOUTHERN RAILWAY CO.

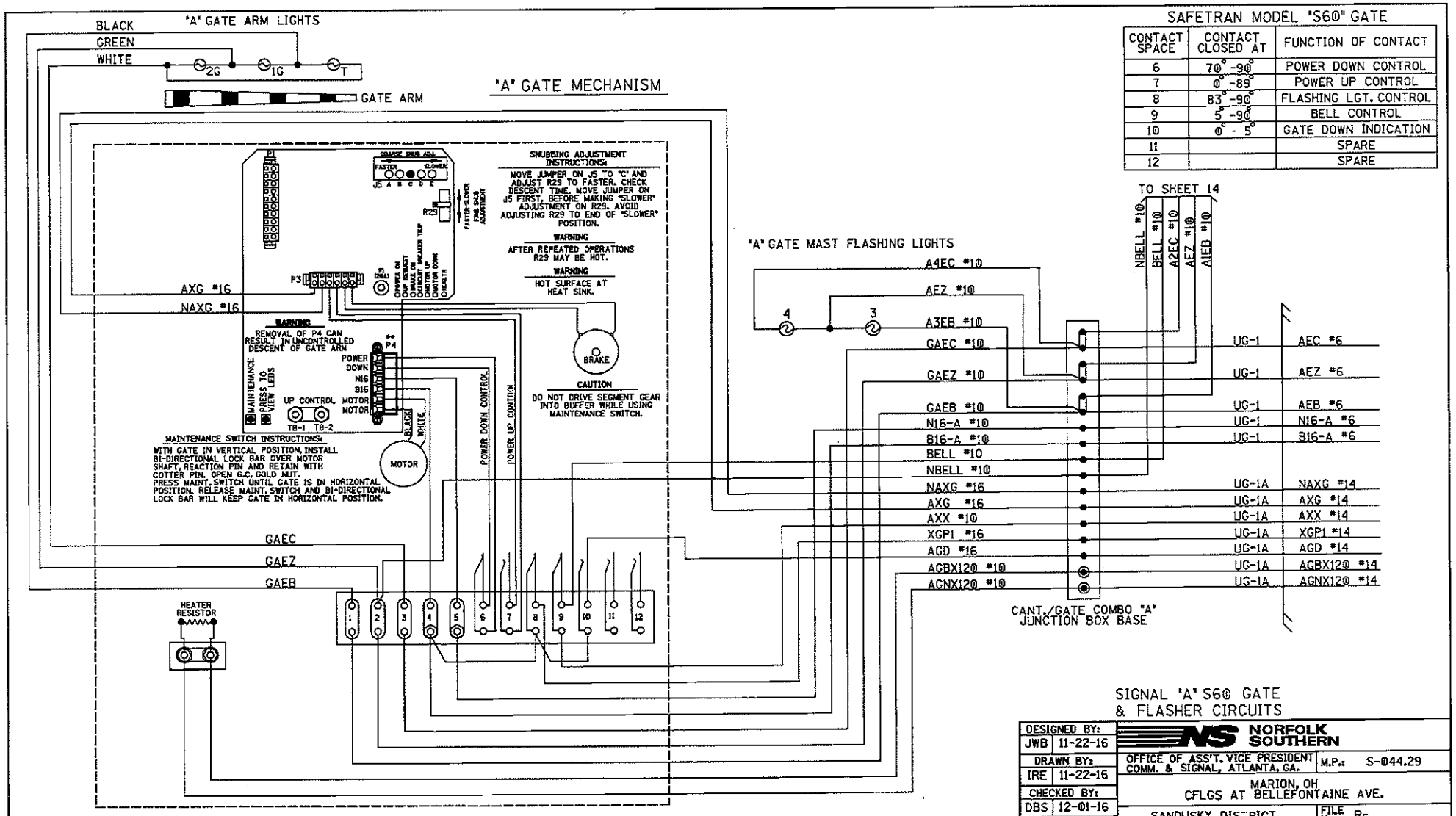

SAFETRAN MODEL "S60" GATE

CONTACT SPACE	CONTACT CLOSED AT	FUNCTION OF CONTACT
6	70°-90°	POWER DOWN CONTROL
7	0°-89°	POWER UP CONTROL
8	83°-90°	FLASHING LGT. CONTROL
9	5°-90°	BELL CONTROL
10	0°-5°	GATE DOWN INDICATION
11		SPARE
12		SPARE

SIGNAL 'A' S60 GATE & FLASHER CIRCUITS

DESIGNED BY: JWB 11-22-16	NORFOLK SOUTHERN	
DRAWN BY: IRE 11-22-16	OFFICE OF ASS'T. VICE PRESIDENT COMM. & SIGNAL, ATLANTA, GA.	M.P.: S-044.29
CHECKED BY: DBS 12-01-16	MARION, OH CFLGS AT BELLEFONTAINE AVE.	
IN SERVICE: - -	SANDUSKY DISTRICT	FILE No. R-
	CADD or DWG. No. SNCS04429.15	SHEET No. 15 of 23

REVISION INITIALS

PROPERTY NORFOLK SOUTHERN RAILWAY CO.

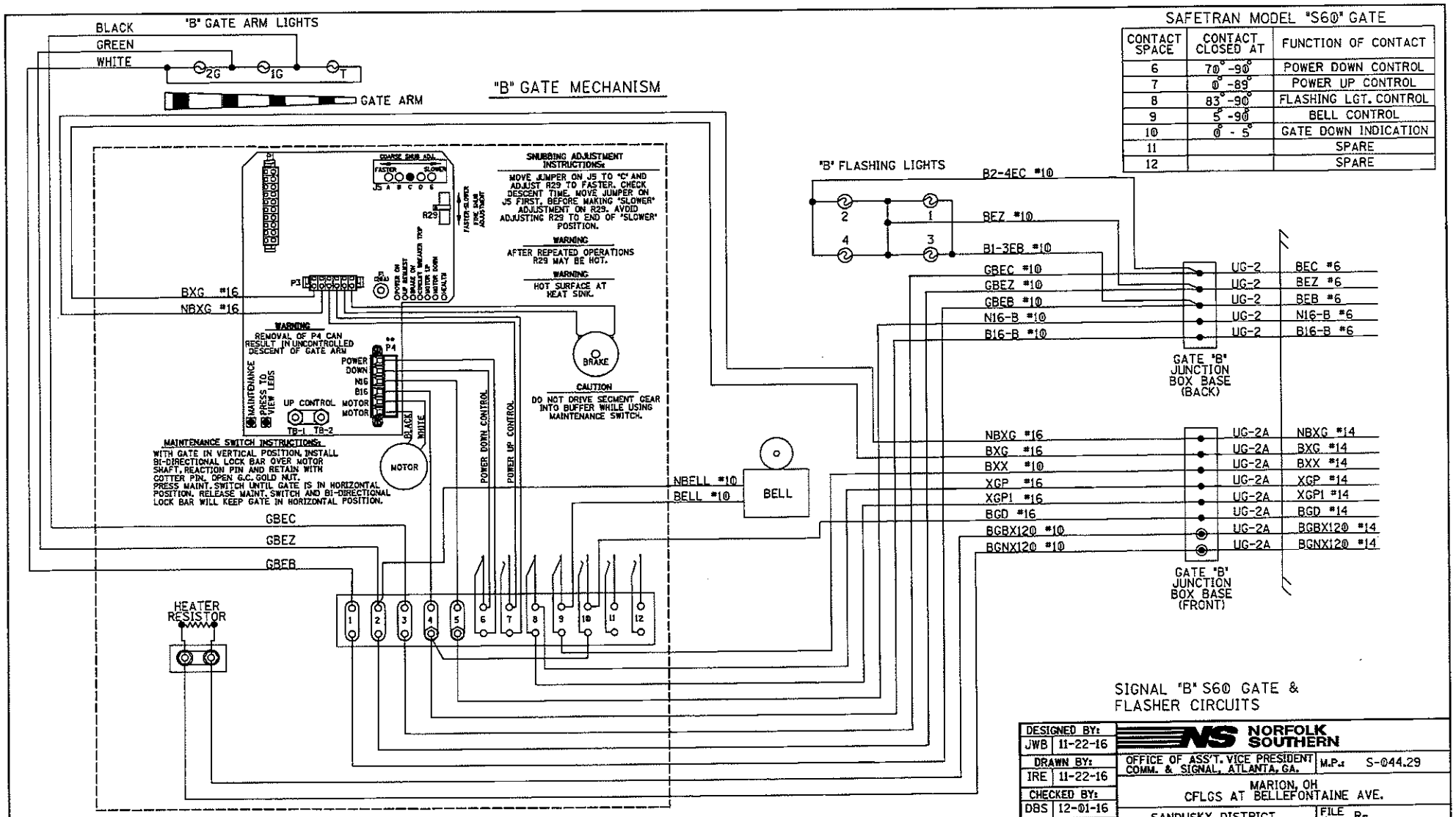
"B" GATE ARM LIGHTS
BLACK
GREEN
WHITE
2G
1G
T
GATE ARM
"B" GATE MECHANISM
"B" FLASHING LIGHTS
B2-4EC #10
BEZ #10
B1-3EB #10
GBEC #10
GBEZ #10
GBEB #10
N16-B #10
B16-B #10
UG-2
BEC #6
BEZ #6
BEB #6
N16-B #6
B16-B #6
GATE "B" JUNCTION BOX BASE (BACK)
NBXG #16
BXG #16
BXX #10
XGP #16
XGP1 #16
BGD #16
BGBX120 #10
BGNX120 #10
UG-2A
NBXG #14
BXG #14
BXX #14
XGP #14
XGP1 #14
BGD #14
BGBX120 #14
BGNX120 #14
GATE "B" JUNCTION BOX BASE (FRONT)
BXG #16
NBXG #16
NBELL #10
BELL #10
BELL
GBEC
GBEZ
GBEB
HEATER RESISTOR
SNUBBING ADJUSTMENT INSTRUCTIONS:
MOVE JUMPER ON J5 TO "C" AND ADJUST R29 TO FASTER. CHECK DESCENT TIME. MOVE JUMPER ON J5 FIRST, BEFORE MAKING "SLOWER" ADJUSTMENT ON R29. AVOID ADJUSTING R29 TO END OF "SLOWER" POSITION.
WARNING
AFTER REPEATED OPERATIONS R29 MAY BE HOT.
WARNING
HOT SURFACE AT HEAT SINK.
WARNING
REMOVAL OF P4 CAN RESULT IN UNCONTROLLED DESCENT OF GATE ARM
CAUTION
DO NOT DRIVE SEGMENT GEAR INTO BUFFER WHILE USING MAINTENANCE SWITCH.
MAINTENANCE SWITCH INSTRUCTIONS:
WITH GATE IN VERTICAL POSITION, INSTALL BI-DIRECTIONAL LOCK BAR OVER MOTOR SHAFT, REACTION PIN AND RETAIN WITH COTTER PIN. OPEN G.C. GOLD NUT. PRESS MAINT. SWITCH UNTIL GATE IS IN HORIZONTAL POSITION. RELEASE MAINT. SWITCH AND BI-DIRECTIONAL LOCK BAR WILL KEEP GATE IN HORIZONTAL POSITION.
POWER DOWN CONTROL
POWER UP CONTROL
UP CONTROL
TB-1 TB-2
MOTOR
BRAKE
P3
P4
R29
J5
SAFETRAN MODEL "S60" GATE
CONTACT SPACE | CONTACT CLOSED AT | FUNCTION OF CONTACT
6 | 70°-90° | POWER DOWN CONTROL
7 | 0°-89° | POWER UP CONTROL
8 | 83°-90° | FLASHING LGT. CONTROL
9 | 5°-90° | BELL CONTROL
10 | 0°-5° | GATE DOWN INDICATION
11 | | SPARE
12 | | SPARE
SIGNAL "B" S60 GATE & FLASHER CIRCUITS
DESIGNED BY: JWB 11-22-16
DRAWN BY: IRE 11-22-16
CHECKED BY: DBS 12-01-16
IN SERVICE: - -
NORFOLK SOUTHERN
OFFICE OF ASS'T. VICE PRESIDENT COMM. & SIGNAL, ATLANTA, GA.
M.P.: S-044.29
MARION, OH
CFLGS AT BELLEFONTAINE AVE.
SANDUSKY DISTRICT
FILE No. R-
CADD or DWG. No. SNCS04429.16
SHEET No. 16 of 23
REVISION INITIALS
PROPERTY
NORFOLK SOUTHERN RAILWAY CO.

LEFT TWO ROWS TERMINAL BOARD 1

"1A" "1B"

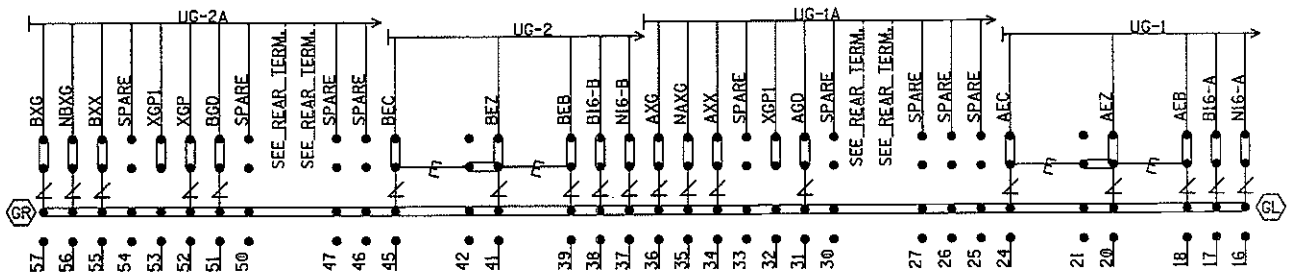

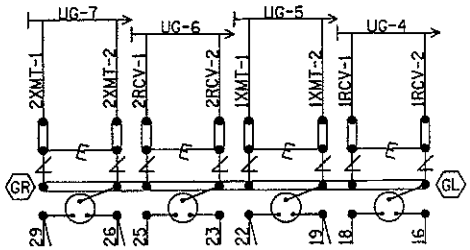

NOTE: INSTALL TEST LINKS ON ALL TRACK WIRES AND ON ALL LOW VOLTAGE UNDERGROUND CABLE TERMINATIONS.

SEE FARADAY SHIELD DETAILS - 1A & 1B FOR HOW THIS PORTION OF THE FARADAY SHIELD IS PREDRILLED. ONLY INSTALL AND USE THE TERMINALS NEEDED.

= Heavy Duty Equalizer (022700-1X)

= Clearview Lightning Arrester (022585-1X)

= LPC-10560-51

GR / GL = TERMINALS GROUNDED TO SHIELD. 4 POST BLOCKS USE EITHER - GR - SERMMI PART NO. 61278 GL - SERMMI PART NO. 61278-1.

BACKBOARD 1A & 1B

DESIGNED BY: JWB 11-22-16	NORFOLK SOUTHERN		
DRAWN BY: IRE 11-22-16	OFFICE OF ASS'T. VICE PRESIDENT COMM. & SIGNAL, ATLANTA, GA.	M.P.: S-044.29	
CHECKED BY: DBS 12-01-16	MARION, OH CFLGS AT BELLEFONTAINE AVE.		
IN SERVICE: - -	SANDUSKY DISTRICT	FILE No. R-	
	CADD or DWG. No. SNCS04429.17	SHEET No. 17 of 23	

REVISION INITIALS										

PROPERTY NORFOLK SOUTHERN RAILWAY CO.

REAR VIEW OF LEFT TWO ROWS TERMINAL BOARD 1
"1A"
"1B"

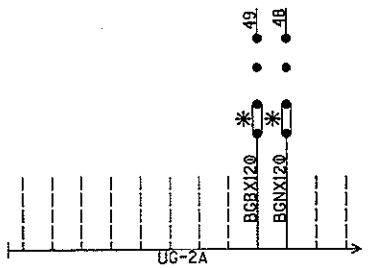

(SEE PREVIOUS SHEET FOR OTHER WIRES IN CABLE)

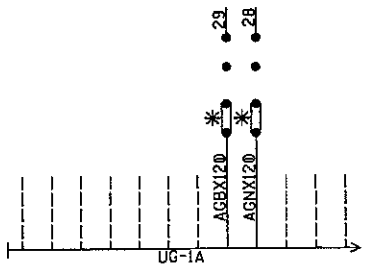

(SEE PREVIOUS SHEET FOR OTHER WIRES IN CABLE)

NOTE: ALL 120VAC AND ABOVE WILL BE WIRED TO THE REAR OF FARADAY BACKBOARD. INSULATED NUTS MUST BE USED ON ALL TERMINALS.

✳ = CLOSED DURING WINTER MONTHS

REAR BACKBOARD 1A & 1B

DESIGNED BY: JWB 11-22-16	NORFOLK SOUTHERN		
DRAWN BY: IRE 11-22-16	OFFICE OF ASS'T. VICE PRESIDENT COMM. & SIGNAL, ATLANTA, GA.	M.P.: S-044.29	
CHECKED BY: DBS 12-01-16	MARION, OH CFLGS AT BELLEFONTAINE AVE.		
IN SERVICE: - -	SANDUSKY DISTRICT	FILE No. R-	
	CADD or DWG. No. SNCS04429.18	SHEET No. 18 of 23	

REVISION INITIALS										

PROPERTY
NORFOLK SOUTHERN RAILWAY CO.

NOTE: IF THE FARADAY SHIELD WOULD EVER NEED TO BE DRILLED IN THE FIELD, PROPER PRECAUTIONS MUST BE TAKEN TO INSURE METAL SHAVINGS DO NOT GET INTO EXISTING TERMINALS/WIRES.

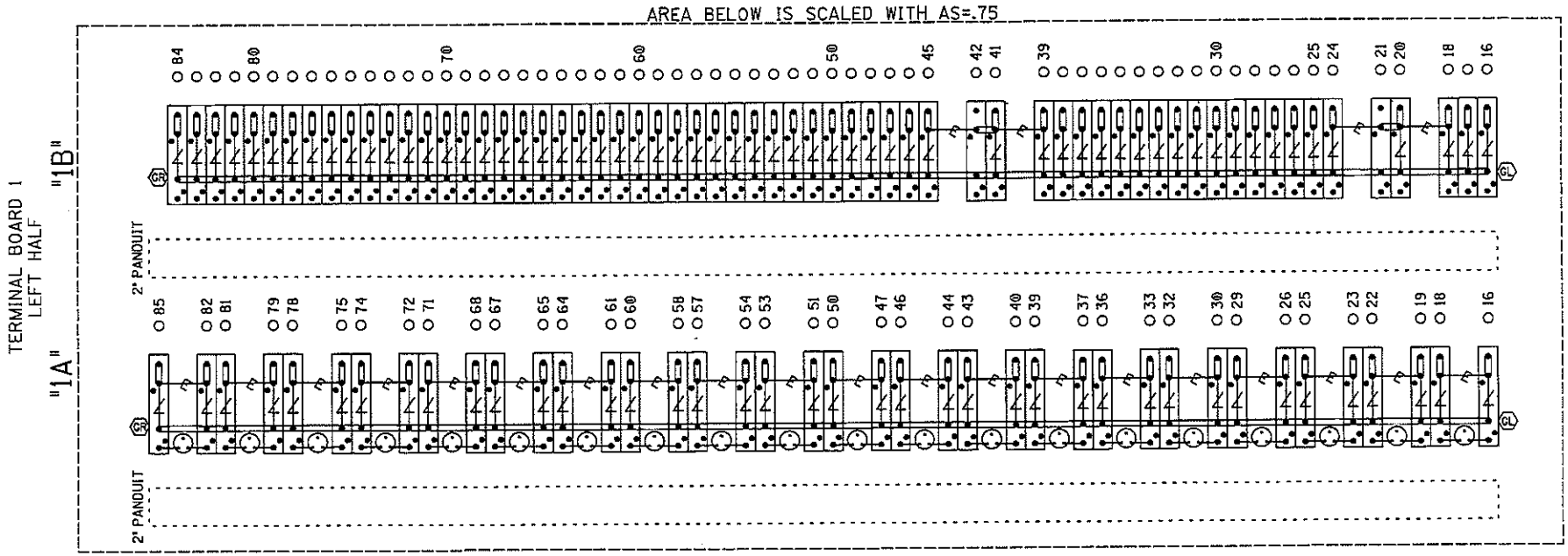

= INDICATES PLACEMENT OF PANDUIT

THIS SHEET IS FOR REFERENCE ONLY, TO REFLECT HOW THE FARADAY SHIELD IS PREDRILLED. ONLY INSTALL AND USE THE TERMINALS NEEDED.

GR / GL = TERMINALS GROUNDED TO SHIELD. 4 POST BLOCKS USE EITHER - GR - SERMMI PART NO. 61278 GL - SERMMI PART NO. 61278-1.

FARADAY SHIELD 1A & 1B

DESIGNED BY: JWB 11-22-16	NORFOLK SOUTHERN		
DRAWN BY: IRE 11-22-16	OFFICE OF ASS'T. VICE PRESIDENT COMM. & SIGNAL, ATLANTA, GA.	M.P.: S-044.29	
CHECKED BY: DBS 12-01-16	MARION, OH CFLGS AT BELLEFONTAINE AVE.		
IN SERVICE: - -	SANDUSKY DISTRICT	FILE No. R-	
	CADD or DWG. No. SNCS04429.19	SHEET No. 19 of 23	

REVISION INITIALS

PROPERTY NORFOLK SOUTHERN RAILWAY CO.

NOTE: IF THE FARADAY SHIELD WOULD EVER NEED TO BE DRILLED IN THE FIELD, PROPER PRECAUTIONS MUST BE TAKEN TO INSURE METAL SHAVINGS DO NOT GET INTO EXISTING TERMINALS/WIRES.

AREA BELOW IS SCALED WITH AS=.75

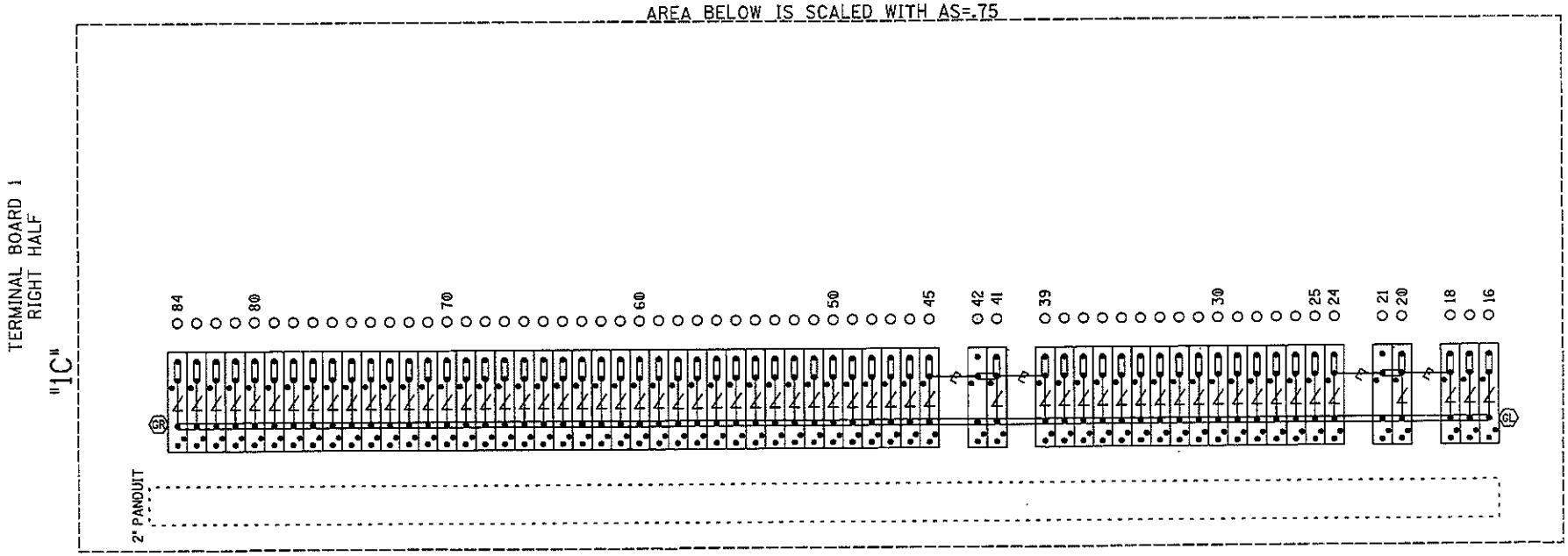

= Heavy Duty Equalizer (022700-1X)

Clearview = Lightning Arrester (022585-1X)

= LPC-10560-51

= INDICATES PLACEMENT OF PANDUIT

THIS SHEET IS FOR REFERENCE ONLY, TO REFLECT HOW THE FARADAY SHIELD IS PREDRILLED. ONLY INSTALL AND USE THE TERMINALS NEEDED.

GR / GL = TERMINALS GROUNDED TO SHIELD. 4 POST BLOCKS USE EITHER - GR - SERMMI PART NO. 61278 GL - SERMMI PART NO. 61278-1.

FARADAY SHIELD 1C

DESIGNED BY: JWB	11-22-16
DRAWN BY: IRE	11-22-16
CHECKED BY: DBS	12-01-16
IN SERVICE:	- -

NORFOLK SOUTHERN

OFFICE OF ASS'T. VICE PRESIDENT COMM. & SIGNAL, ATLANTA, GA. M.P.: S-044.29

MARION, OH
CFLGS AT BELLEFONTAINE AVE.

SANDUSKY DISTRICT FILE No. R-

CADD or DWG. No. SNCS04429.20 SHEET No. 20 of 23

REVISION INITIALS

PROPERTY
NORFOLK SOUTHERN RAILWAY CO.

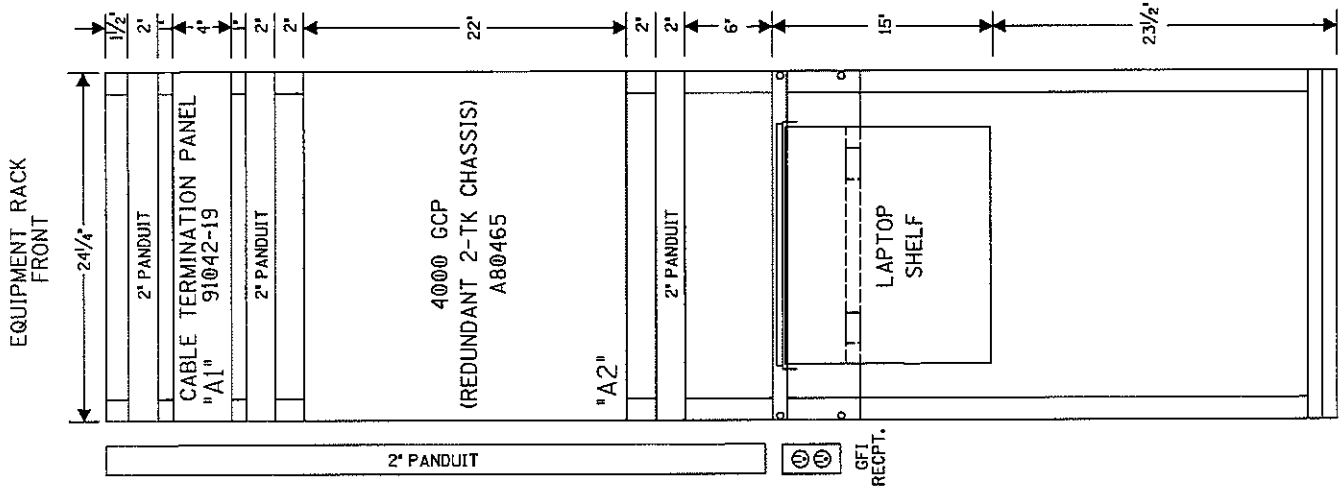

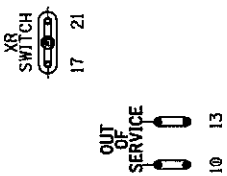

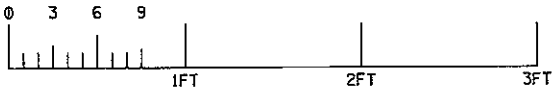

HOUSE SIDE C LAYOUT &
RACK PLACEMENT

DESIGNED BY: JWB 11-22-16	NORFOLK SOUTHERN		
DRAWN BY: IRE 11-22-16	OFFICE OF ASS'T. VICE PRESIDENT COMM. & SIGNAL, ATLANTA, GA.	M.P.: S-044.29	
CHECKED BY: DBS 12-01-16	MARION, OH CFLGS AT BELLEFONTAINE AVE.		
IN SERVICE: - -	SANDUSKY DISTRICT	FILE No. R-	
	CADD or DWG. No. SNCS04429.21	SHEET No. 21 of 23	

REVISION INITIALS	'CA'	'CB'	'CC'	'CD'	'CE'	'CF'	'CG'				PROPERTY NORFOLK SOUTHERN RAILWAY CO.

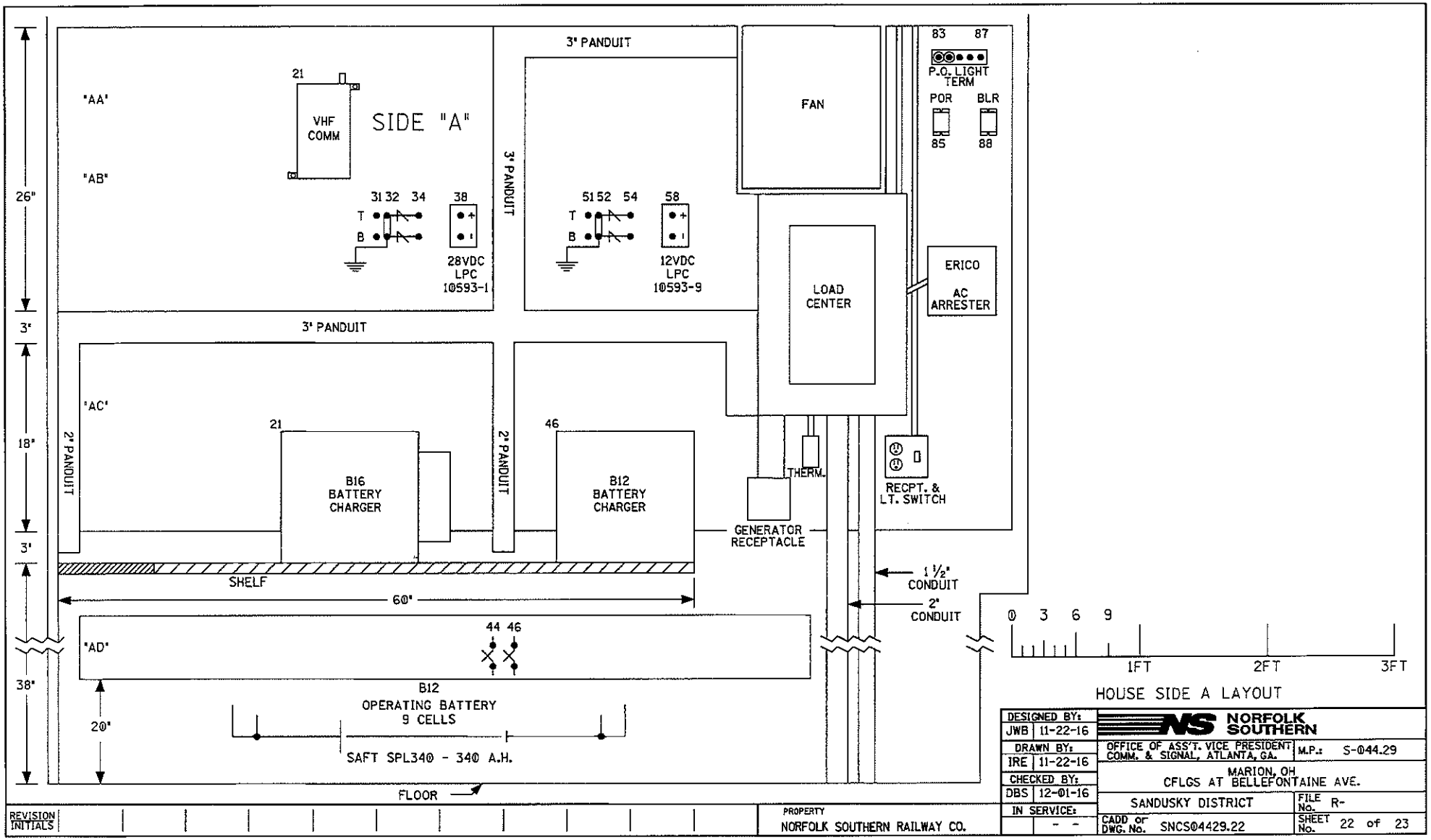
"AA"
"AB"
"AC"
"AD"
SIDE "A"
21
VHF COMM
31 32 34
T
B
38
28VDC LPC 10593-1
51 52 54
12VDC LPC 10593-9
58
3" PANDUIT
2" PANDUIT
FAN
LOAD CENTER
83 87
P.O. LIGHT TERM
POR BLR
85 88
ERICO AC ARRESTER
B16 BATTERY CHARGER
B12 BATTERY CHARGER
46
THERM.
GENERATOR RECEPTACLE
RECPT. & LT. SWITCH
SHELF
60"
1 1/2" CONDUIT
2" CONDUIT
44 46
B12 OPERATING BATTERY 9 CELLS
SAFT SPL340 - 340 A.H.
26"
3"
18"
38"
20"
FLOOR
0 3 6 9
1FT 2FT 3FT
HOUSE SIDE A LAYOUT
DESIGNED BY: JWB 11-22-16
DRAWN BY: IRE 11-22-16
CHECKED BY: DBS 12-01-16
IN SERVICE: - -
NORFOLK SOUTHERN
OFFICE OF ASS'T. VICE PRESIDENT COMM. & SIGNAL, ATLANTA, GA.
M.P.: S-044.29
MARION, OH
CFLGS AT BELLEFONTAINE AVE.
SANDUSKY DISTRICT
FILE No. R-
CADD or DWG. No. SNCS04429.22
SHEET No. 22 of 23
REVISION INITIALS
PROPERTY
NORFOLK SOUTHERN RAILWAY CO.

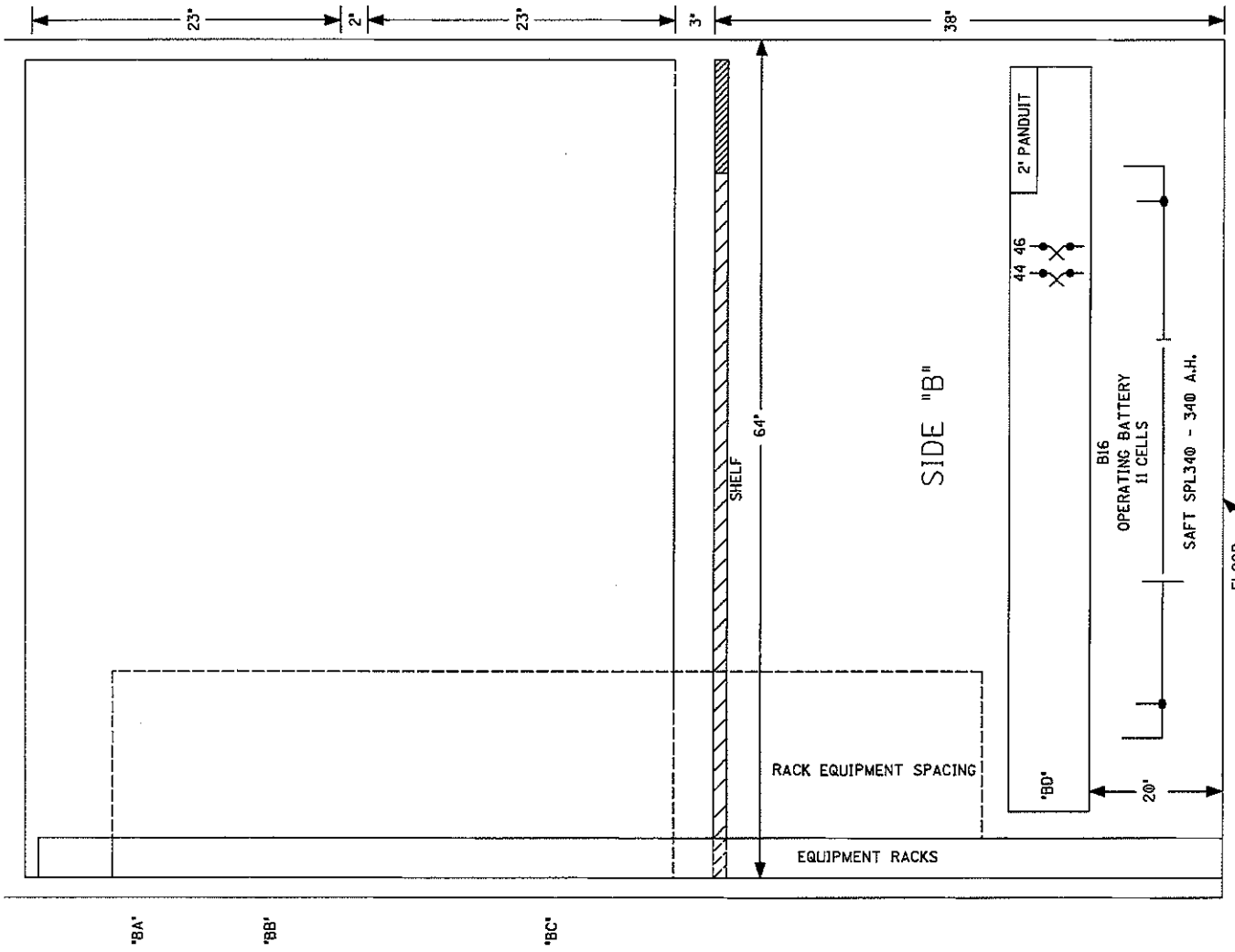

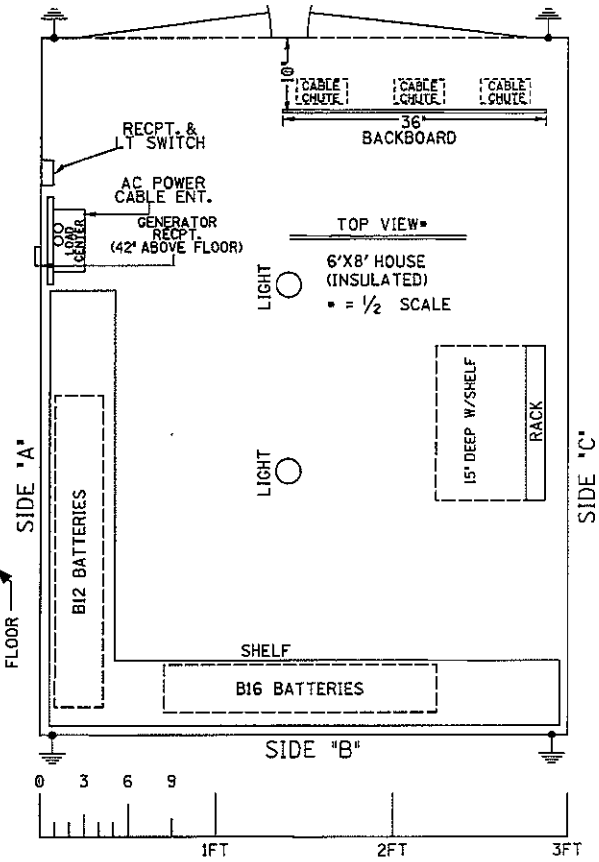

HOUSE SIDE B & TOP VIEW LAYOUT

DESIGNED BY: JWB 11-22-16	NORFOLK SOUTHERN		
DRAWN BY: IRE 11-22-16	OFFICE OF ASS'T. VICE PRESIDENT COMM. & SIGNAL, ATLANTA, GA.	M.P.: S-044.29	
CHECKED BY: DBS 12-01-16	MARION, OH CFLGS AT BELLEFONTAINE AVE.		
IN SERVICE: - -	SANDUSKY DISTRICT	FILE No. R-	
	CADD or DWG. No. SNCS04429.23	SHEET No. 23 of 23	

REVISION INITIALS										

PROPERTY
NORFOLK SOUTHERN RAILWAY CO.

OHIO RAIL DEVELOPMENT COMMISSION

Mail Stop #3140, 1980 West Broad Street, Columbus OH 43223
John R. Kasich, Governor • Mark Policinski, ORDC Chairman

September 27, 2016

Mr. Stephen Klinger
Public Projects Engineer
1200 Peachtree Street, Box 123
Atlanta, Ga. 30309

RE: Marion County, Silver Street, DOT 481538V, PID 103769
Marion County, SR 739, DOT 481532E, PID 103759
Erie County, Vermilion Road, DOT 524037N, PID 103770

Dear Mr. Klinger:

Diagnostic reviews were held at the above grade crossings. These crossings have been recommended for certain upgrades in the diagnostic surveys. Please take note to these recommendations individually.

NS is authorized to proceed with the site plans and cost estimates (PE) for these projects. This authorization is made with the stipulation and understanding that any field work needs prior approval before work begins. This authorization is made with the stipulation and understanding that an approved estimate may contain entries for items or activities that may be cited and found to be ineligible for federal participation during the project audit.

The ORDC is not requesting that the PUCO issue an Order at this time. When the ORDC receives the PE it will be evaluated and a construction-only Order will be requested from PUCO. Please submit the PE to ORDC within 90 days of receipt of this letter.

The diagnostic review forms are attached. Please note any recommendations for each crossing in the survey, if any, made by the team with regard to requirements for this location. Any minor roadway work necessary for MUTCD compliance should be incorporated into the PE and such costs will flow through the railroad reimbursement process

The Project Manager for this project is Joe Reinhardt. He can be reached at (614) 644.0291, or Joe.Reinhardt@dot.state.oh.us, if you have any questions.

Sincerely,

Joseph N. Reinhardt

Joseph N. Reinhardt
Project Manager

C: Jill Henry, PUCO
ORDC (file)

OHIO RAIL DEVELOPMENT COMMISSION

Ohio Rail Development Commission
Mail Stop 3140, 1980 W. Broad Street,
Columbus, OH

High Hazard Crossing With Active Warning Devices			
Street Name: Bellefontaine Ave.		County: MAR	
LHA: City of Marion		USDOT#: 481532E	
Nearest City: Marion		Hazard Rank: 9	
Roadway Information			
ADT: 6483 (2011)	Posted Speed Limit: None Listed 35mph		
Railroad: Norfolk Southern	Number of Tracks: 2		
Train Count: 34	Speed Over Crossing: 30 mph		
Storage Distance (Ft.): Not listed.	Train Detection Type: CWT		
Accidents			
Accident Factors	2 of Accidents in Last 5 Years:		
	0 of Fatalities in Last 5 Years:		
Accident Date	1/30/2012	12/15/2011	
Position of Accident	Moving over crossing	Moving over crossing	
Circumstance	Rail equipment struck by highway user	Rail equipment struck by highway user	
Visibility/Time of Day	Dawn	Dark	
Weather Conditions	Clear	Rail	
Crossing Interconnect.	No	No	
Crossing Illuminated	Yes	No	
Drove Around Train	No	No	
Highway User Action	Went around the gate	Did not stop	
Alcohol/Drug Related?			
Driver Speeding?			

Other Notes: 1/3/2012: Motorist did not stop at crossing and was struck by the train. 12/15/2011: motorist entered crossing and struck the lead locomotive of the train.

Recommendations:

Install cantilever in NE Quadrant, eliminate ped gates, add an extra bell in SW Quadrant & paint stop bars. Curb will be needed

County: MAR Route: Bellefontaine Ave DOT#: 481532E Date: 4/8/2016

Existing Traffic Control Devices

Type of Warning Devices	Installed?		Quantity/Comments
Advance Warning Signs (condition?)	Yes	No	AVERAGE
'Stop' Signs	Yes	No	
'Stop Ahead' Signs	Yes	No	
Pavement Markings (condition?)	Yes	No	POOR
Crossbucks	Yes	No	
Number of Tracks Signs	Yes	No	
Inventory Tags	Yes	No	
Interconnected Highway Traffic Signal	Yes	No	
Mast-Mounted Flashing Lights	Yes	No	
Cantilever Flashing Lights	Yes	No	Number: Length:
Side Lights	Yes	No	
Automatic Gates	Yes	No	Number: Length:
Bells	Yes	No	Number:
Sidewalk Gate Arms	Yes	No	
'No Turn' Signs	Yes	NO	
Illumination	Yes	No	
Is crossing flagged by train crew?	Yes	No	
Other	Yes	No	

Railroad Data

Railroad Characteristics	Initial Information (from database)	Revised
? Total trains per day	34	
< 1 per day		
? Day thru trains	16	
? Night thru trains	16	
? Daytime switching movements	2	
Nighttime switching movements		
Total number of tracks	2	
Number of main tracks	2	
Number of other tracks		
Maximum train speed	30	
Typical train speed		
Amtrak		

If multiple tracks, can two trains occupy crossing at the same time? Yes No

Can one train block the motorists' view of another train at crossing? Yes (Explain below) No → NUMEROUS BUILDINGS CLOSE TO TRKS

Can one or more tracks be eliminated through the crossing? Yes No

Are there other track(s) crossing this same roadway within 100 ft of this crossing? No

If yes, Crossing DOT #(if different) _____

If yes, distance _____ (take measurement between track centerlines at closest point along roadway)

County: MAR Route: Bellefontaine Ave DOT#: 481532E Date: 4/8/2016

Roadway Data

Local Highway Authority: City of Marion

Roadway Characteristics	Initial Information (from database)	Revised
Average daily traffic	6483 (2011)	
Highway paved	Yes X No	Yes No

Roadway Surface: (Blacktop) Gravel Concrete Other _____

Roadway width: 34 ft.

Number of highway lanes	~~2~~ 3	
Urban or Rural	Urban	
Vehicle Speed: 35 MPH		

School Bus Operation: **No** **Yes** X Amount 2

Hazardous Materials Trucks: **No** **Yes** X Amount 2

Shoulders: **No** (**Yes**)

Is the shoulder surfaced? **No** (**Yes**)

Is there existing guardrail along roadway in crossing vicinity? (**No**) **Yes**

Is stopping site distance adequate? (See Table 2) (**Yes**) **No** If no, deficient approach(es) _____

Quadrant _____ Curb and Gutter:	Quadrant _____ Curb and Gutter:
Functional (Curb height = 4" or more)	Functional (Curb height = 4" or more)
Non-functional (Curb height = Less than 4")	Non-functional (Curb height = Less than 4")
None	None

Pedestrians: **No** (**Yes**)

Is sidewalk present? **No** (**Yes**)

Is there a nearby intersection that could cause queuing over the crossing? (**No**) **Yes**

If yes,

Street Name _____

Distance _____

Is this intersection signalized? (**No**) **Yes**

Are the signals currently interconnected with the existing crossing warning devices? (**No**) **Yes**

Is there a 'Do not Stop on Track' sign? (**No**) **Yes**

Is a roadway improvement project (e.g. widening, turn lanes, nearby new or upgraded traffic signal, sidewalk) planned at or near this location in the foreseeable future? **No** **Yes**

If yes,

Improvement type _____ Lead Agency _____

Timeline/completion _____

Is it the consensus of the Diagnostic Review Team that this is a potential closure project? (**No**) **Yes**

Explain reasons:

Type of Development

Open Space Institutional	Location of nearby schools:
Industrial (Commercial)	
(Residential)	

County: MAR **Route: Bellefontaine Ave** **DOT#: 481532E** **Date: 4/8/2016**

Potential Red Flags / Project Challenges

Traffic Signal Preemption (include traffic signal intersection name and LHA with jurisdiction over traffic signal, if known):

NO

Crossing Consolidation or Closure:

NO

Real Estate or ROW:

YES

Culverts / Drainage / Ballast Conditions:

NO

Roadway and/or Sidewalks:

YES

Circuitry (e.g. reaches out to other crossings, specific needs, etc.): WHAT KIND? PRE-EMPT?

?

Environmental:

NO

Other:

County: MAR Route: Bellefontaine Ave DOT#: 481532E Date: 4/8/2016

Field Sketch

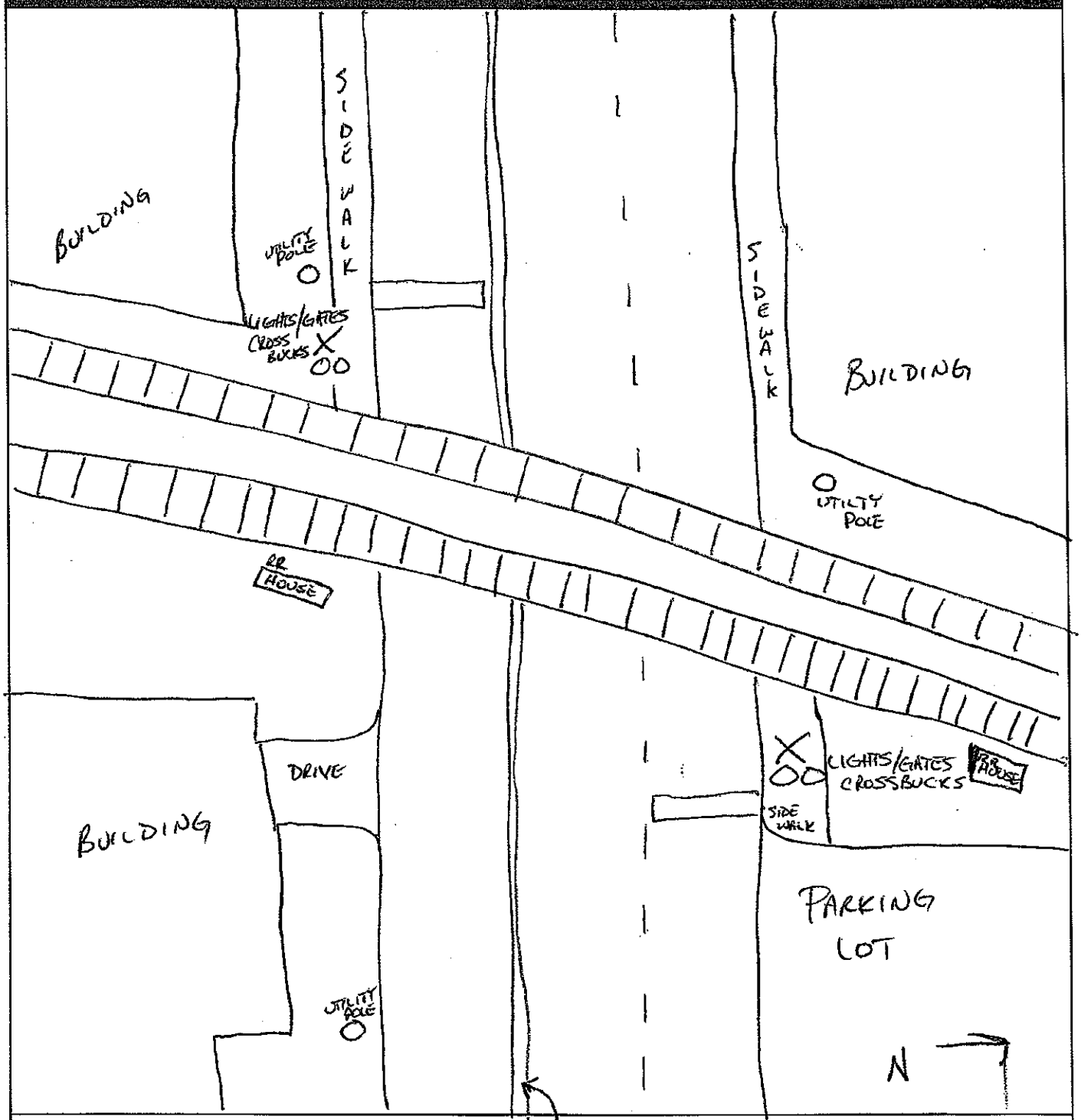

Crossing Angle ☐ 0-29° ☐ 30-59° ☒ 60-90° Measured in DOUBLE YELLOW Quadrant?

Sketch by: [illegible]

County: MAR **Route: Bellefontaine Ave** **DOT#: 481532E** **Date: 4/8/2016**

TABLE 1

Clearing Sight Distances

Maximum Authorized Train Speed	Distance (dT) Along Railroad from Crossing (ft)
1 - 10	240
15	360
20	480
25	600
30	720
35	840
40	960
45	1080
50	1200
55	1320
60	1440
65	1560
70	1680
75	1800
80	1920
85	2040
90	2160

Source: R-H Grade Crossing Handbook Table 36 (pp. 132-133)

Notes:

All calculated distances are rounded up to the next higher 5-foot increment.

Distances indicated are for 65-ft double bottom semi-tractor trailers and level single track 90 degree crossings; and may need to be adjusted for multiple tracks, skewed crossings or approaches on grades.

Clearing Sight Distance is to be measured in each vehicle travel direction at non-gated crossings as viewed from a point 25 feet from centerline of nearest track in the center of whichever travel lane is nearest the direction along track being measured.

TABLE 2

Stopping Sight Distances

Highway Vehicle Speed	Distance (dH) Along Roadway from Crossing (ft)
0	n/a
5	50
10	70
15	105
20	135
25	180
30	225
35	280
40	340
45	410
50	490
55	570
60	660
65	760
70	865

Source: R-H Grade Crossing Handbook Table 36 (pp. 132-133)

Notes:

All calculated distances are rounded up to the next higher 5-foot increment.

Distances indicated are for 65-ft double bottom semi-tractor trailers on dry level pavements.

Stopping Sight Distance is to be measured on each roadway approach to crossing from stop bar.

OHIO RAIL DEVELOPMENT COMMISSION

Ohio Rail Development Commission
Mail Stop 3140, 1980 W. Broad Street,
Columbus, OH

Diagnostic Review

(MAR – Bellefontaine Ave., SR 739, DOT # 481532E)

4/8/2016

Please print:

NAME	AGENCY	EMAIL ADDRESS	PHONE
Cathy Stout	ORDC	catherine.stout @dot.ohio.gov	6146440313
Tom Burns	"		614-644-0293
Joe Reinhardt	ORDC		614-580-7729
Matt Dietrich	ORD		644-0295 614-466
Stephen Klinger	NS	Stephen.klinger @NSCORP.com	404-617-5450
Rich Logsdon	OSP	rlogsdon@dps.state.oh.us	740-382-3724
Jerry Gibson	PUCO/FRA	jerry.gibson@puc.state.oh.us	419 234 8416
Jim Bischoff	City of Marion	jbischoff@marionohio.org	740-387-2240
Scott Bishop	City of Marion	sbishop@marionohio.org	740-387-2240
Trevor Beers	Nucor	trevor.beers@nucor	740-583-4100

This foregoing document was electronically filed with the Public Utilities

Commission of Ohio Docketing Information System on

2/16/2017 9:30:06 AM

in

Case No(s). 17-0471-RR-RCP

Summary: Memorandum In the Matter of a Request for Upgrades to the Active Warning Devices at the Norfolk Southern Railway Crossing, Bellefontaine Avenue/SR739 DOT#481-532E, in Marion County, Ohio. electronically filed by Mrs. Jill A Henry on behalf of PUCO/Rail Division