Public Utilities
Commission of Ohio

Memo

To: Docketing Division

From: Jill Henry, Rail Specialist, Rail Division

Cc: PUCO Legal Department

Date: 1/12/17

Re: PUCO Case No. 17-109-RR-FED- In the Matter of a Request for the Installation of Active Warning Devices at the Norfolk Southern Railway Crossing at County Line Road/CR 15, DOT# 476-869X, in Hancock County, Ohio.

On August 12, 2016, the Ohio Rail Development Commission (ORDC) authorized funding for Norfolk Southern Railway to install new lights and gates and a surface at County Line Road/CR 15, DOT# 476-869X, in Hancock County, Ohio. The crossing was surveyed on April 29, 2016 and was found to warrant the upgrades. The electric utility provider for this crossing is American Electric Power (AEP).

The project will be paid for with federal funds and is actual cost. The plans and estimates for the project in the amount of $376,933.00 have been approved. Construction may commence at once. **Staff requests a Finding & Order with completion of the project in nine months.** Staff requests that the following language be incorporated in the Finding & Order:

It is expected that all work necessary for FHWA acceptance of the warning devices will be completed by the in-service due date and that the <u>railroad will be responsible</u> for this work. This work includes, but is not limited to:

- **Any ancillary work to make the warning devices function as designed and visible to the roadway user, and**
- **MUTCD compliance, including minor roadway work if necessary.**

Please serve the following parties of record:

Norfolk Southern Railway Company
Stephen Klinger
Public Projects Engineer
1200 Peachtree Street NE
Atlanta, GA 30309-3597

Norfolk Southern Railway Company
Cayela Wimberly
Director Grade Crossing Safety
1200 Peachtree Street NE
Atlanta, GA 30309-3597

Eastman & Smith LTD.
Mr. Casey Talbott
Attorney for Norfolk Southern
One SeaGate 24th Floor
P.O. Box 10032
Toledo, Ohio 43699-0032

Ohio Rail Development Commission
Cathy Stout
Safety Manager
1980 West Broad Street
Mail Stop #3140
Columbus, Ohio 43223

Village of Bluffton
James Mehaffie
Village Administrator
P.O. Box 228
154 N Main Street
Bluffton, Ohio 45817

Hancock County Engineer
Douglas Cade
Deputy Engineer
1900 Lima Avenue
P.O. Box 828
Findlay, Ohio 45839-0828

American Electric Power (AEP)

OHIO RAIL DEVELOPMENT COMMISSION
INTER-OFFICE COMMUNICATION

TO: **Randall Schumacher, Supervisor, Rail Division, PUCO**

FROM: **Cathy Stout, Manager, Safety Section, ORDC**

BY: **Don Damron, Project Manager, ORDC**

SUBJECT: **Hancock County, CR 15, County Line Rd. / Norfolk Southern**
DOT# 476869X, PID# 103464

DATE: **December 29, 2016**

The Public Utilities Commission of Ohio (PUCO) established a Diagnostic Review Team Survey at the subject highway/railroad crossing location on 4/29/2016 and the Ohio Rail Development Commission (ORDC) attended the Diagnostic.

The Diagnostic Review Team recommended the installation of new active warning devices, flashing lights and gates and replacement of the roadway surface to remove the rail joints in the traveled-way. The Diagnostic Review Team Survey form is attached.

The proposed Crossing Site Layout and Cost Estimates for this project have already been provided by Norfolk Southern and ORDC approved the plans and estimates as provided. Please issue a construction-only order for the project outlined above. This authorization is made with the stipulation and understanding that an approved estimate may contain entries for items or activities that may be cited and found to be ineligible for federal participation during the project audit.

It is expected that all work necessary for FHWA acceptance of the warning devices will be completed by the in-service due date and that the railroad will be responsible for this work. This work includes, but is not limited to:

- any ancillary work to make warning devices function as designed and visible to the roadway user, and
- MUTCD compliance – including minor roadway work if necessary.

Thank you for your assistance with these matters.

Attachments:

Diagnostic Review Team Survey dated 4/29/2016
NS Plans and Estimates dated 11/1/2016

c: Jill Henry, PUCO
ORDC Project Manager (file)

OHIO RAIL DEVELOPMENT COMMISSION
Mail Stop #3140, 1980 West Broad Street, Columbus OH 43223
John R. Kasich, Governor • James G. Bradley, Chairman

December 29, 2016

Mr. Stephen Klinger
Norfolk Southern Corporation
Administrator Grade Crossing Program
1200 Peachtree St. NE, Box 123
Atlanta, GA 30309

RE: Automatic Grade Crossing Warning System – Construction Authorization
CR 15, County Line Rd., Hancock County, DOT# 476869X
Ohio PID# 103464, NS S&E Project # 10.2205

Dear Mr. Klinger:

The plan and estimate dated 11/1/2016 for the referenced project has been reviewed and is acceptable. This project is authorized for construction under the master agreement between Ohio Rail Development Commission (ORDC), Public Utilities Commission of Ohio (PUCO) and Norfolk Southern executed on December 19, 2012. Norfolk Southern may proceed with the construction of the proposed grade crossing warning system in accordance with the abbreviated plan.

This authorization is made with the stipulation and understanding that the approved estimate may contain entries for items or activities that may be cited and found to be ineligible for federal participation during the project audit. Reimbursement of eligible actual cost is limited to $376,933.00. ($314,753.00 for the warning system and $62,180 for the roadway surface). Additional costs must be approved in writing by the ORDC prior to being incurred. Emergency verbal authorizations by ORDC may be permitted and will be confirmed by ORDC in writing within ten (10) business days of the verbal approval. This authorization is contingent upon Norfolk Southern accepting the following instructions:

1. Norfolk Southern's project foreman will furnish written notification five (5) working days prior to the date work will start at the project site to Don Damron, ORDC, Mail Stop #3140, 1980 West Broad Street, 2nd Floor, Columbus Ohio 43223, or email don.damron@dot.state.oh.us, or by cell phone at 614-917-8466, office phone at 614-466-2509); and to the Public Utilities Commission of Ohio at George.martin@puc.state.oh.us (phone 614-752-9107). The Norfolk Southern project foreman will also notify the same of any stops and re-starts of the work activity and of the date work was completed for the project.

2. Norfolk Southern will arrange for utilities to be located at the project site by the Ohio Utilities Protection Service (OUPS) prior to any construction activities at the site. Utilities that are not participating members of the service must be contacted directly by Norfolk Southern.

3. Norfolk Southern's project foremen will notify Don Damron at 614-917-8466 (cell) or don.damron@dot.state.oh.us (email) of any changes in the scope of work, cost overruns, material changes, etc. which are not included in the approved plan and estimate and secure approval of same before the work is performed.

4. The construction of this automatic grade crossing warning system includes the replacement of the existing timber/asphalt roadway surface to eliminate the rail joints within the traveled-way. The closure of the roadway and establishment of a detour must be coordinated with the local highway authority and preapproved by ORDC.

5. Norfolk Southern will furnish two (2) copies of each partial bill to ORDC. Please find the enclosed ODOT Purchase Order to reference when billing.

6. Norfolk Southern will furnish two (2) copies of the final all-inclusive bill to ORDC stating the exact dates of starting and completing work, the initial and final dates of construction and location where the accounts may be audited.

7. The installation of the new warning device system will include any ancillary work needed to make the warning devices function as designed and to satisfy MUTCD requirements.

Thank you for your assistance with these matters.

Sincerely,

Donald J. Damron
Project Manager

C: Randall Schumacher, Supervisor, Rail Division, PUCO
George Martin, Grade Crossing Planner, PUCO
ORDC (file)

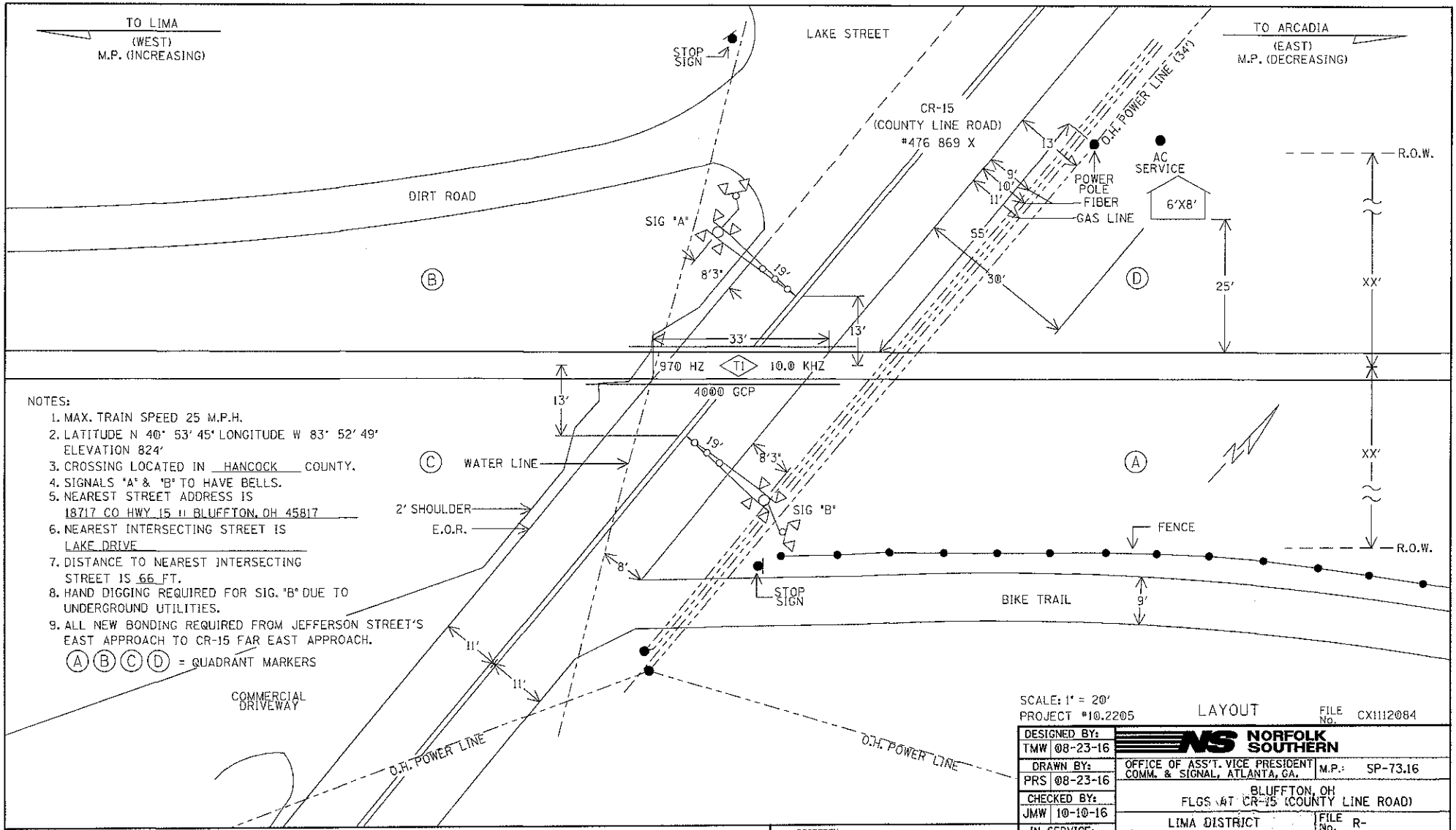

APPROVED AS TO SIGNAL DISPLAY LAYOUT ONLY
Thomas R. [illegible]
11/6/16

01-Nov-16

Round Figure Estimate for Grade Crossing Warning Devices

City/State:	BLUFFTON, OH	Road:	CR-15 (COUNTY LINE RD)
MilePost:	SP-73.16	DOT/AAR:	476869X
State Proj. No.:	PID# 103464	County:	HANCOCK
S&E Proj. No.:	10.2205	File Number:	
Man Days:	180		

*****Purchases - Others*****		
Meals and Lodging:	$24,621.41	
Rental of Equipment:	$33,657.37	
(2 Trucks, 1 Backhoe w/ Trailer and 1 Pipe-Pusher for 30 Days)		
Construction Supervision Vehicle:	$5,148.45	
Purchases - Other Total:		$63,427.23
*****Material And Additives*****		
Material Cost:	$94,111.00	
Sales and Use Tax:	$7,529.00	
Material Handling Freight:	$9,411.11	
Material Total:		$111,051.11
*****Labor And Additives*****		
Labor Cost:	$57,960.00	
(6 man crew at $1,932.00 a day for: 30 days)		
Payroll Tax & Overheads:	$49,416.70	
Preliminary Engineering:	$15,967.46	
Construction Supervision:	$16,930.12	
Labor Total:		$140,274.28
	Project Cost:	$314,752.62
	Scrap / Salvage Credit:	$0.00
	Project Total:	**$314,753.00**

Estimated on: 01-Nov-16

Estimated by: ndney

Estimate valid for 1 year from date of estimate

Norfolk Southern Railway

Highway Crossing Signalization Program - Material List

Do not substitute items without permission from S & E Engineering

City:	BLUFFTON
Road:	CR-15 (COUNTY LINE RD)
Mile Post:	SP-73.16
Drawing Number:	LMPS07316
State ProjectNumber:	PID# 103464
County:	HANCOCK
A A R Number:	476869X
Project Number:	10.2205
File Number:	
New File Number:	CX1112084
WBS:	F-03567
Store Number:	
Supervisor:	Z. McCARTNEY
Tax Code:	

Vendor to supply the following copies after pricing:

1 Set - Material Management with original Invoice
2 Sets - with plans shipped in car with material
1 Set - S&EGen. Supt. Construction w/copy of invoice

Location: BLUFFTON OH S&E Proj. No.: 10.2205 AFE No.: F-03567 Drawing No.: LMPS07316

Store No.: P.O.Number: Date Required: Date Shipped: Vendor: Progress Rail Services

Qty.	Class-Item-CD	UI	Price per Item	Total Price	Item Description	Quantity Shipped	Quantity Installed Date Quan.	Date Quan.	Date Quan.	Quantity Returned (Credit)	Special Instructions
3	670-360693-4	EA	$5.55	$16.65	AAR/DOT NUMBER PLATE/DECAL, ORDER 3 PER PROJECT. 60 DAY LEAD TIME. SUPPLIED BY S'TRAN.						
1	165-006505-4	EA	$1,075.23	$1,075.23	AC SERVICE, COMPLETE LESS METER BASE, ASSEMBLED ON 30' POLE						
4	670-119241-4	EA	$25.01	$100.04	ARRESTOR, LIGHTNING HEAVY DUTY CLEAR VIEW SAFETRAN 022585-1X						
20	105-002620-4	EA	$302.42	$6,048.40	BATTERY, NICAD 340AH, MODEL SPL340						
1	670-503047-4	EA	$181.50	$181.50	BELL, CROSSING ELECTRONIC GENERL SIGNAL, EB-3-360-5 CR 02-044350						
2	670-005125-4	EA	$7.24	$14.48	BLOCK, TERMINAL BAKELITE FOR MOUNTING LIGHTING ARRESTOR EQUALIZER OR RESISTANCE UNIT						
2	670-980689-4	EA	$75.48	$150.96	BRACKET HIGH WIND, (RIGID 3'), WIG- 191036, WALRUS TUSK TYPE						
2	670-561375-4	EA	$1,197.90	$2,395.80	BRACKET, GATE SAVER, NEG385102GS, SPRING LOADED SWING AWAY ADAPTER FOR FIBERGLASS/ALUMINUM GATES, USE WITH GATE 38' AND LESS						
1	670-356949-4	EA	$94.05	$94.05	CABLE, 10' GENERATOR HOOK UP, SERRMI P/N 40524. FEMALE CONNECTOR						
500	465-939422-4	LF	$2.93	$1,465.00	CABLE, UG 12 CONDUCTOR NO 14 AWG SOLID EACH CONDUCTOR WITH 5/64 IN INSULATION 10 MIL						
350	465-292862-4	LF	$1.36	$476.00	CABLE, UG 2-6 TWISTED, S-23 OKONITE 113-12-3933 SOLID TINNED CONDUCTOR						
500	465-292929-4	LF	$4.55	$2,275.00	CABLE, UG 5 COND. NO. 6 AWG SOLID COPPER CABLE TO MEET NS CORP. SPEC. FOR SIGNAL						
350	465-791835-4	FT	$3.84	$1,344.00	CABLE, UG AC ENTRANCE 3C#6-7X OKONITE FMPF-L 094-078 TR W/G 1 X 8 7X W010 BRZ TAPE 600V PRODUCT CODE 206-11-6070						
2	670-010671-4	EA	$738.15	$1,476.30	CHARGER, BATTERY CRAGG MODEL 40 DTC-12V, 40 AMP, P/N 520940						
120	165-544477-4	FT	$3.22	$386.40	CONDUIT, 4"x10' PVC, SCHEDULE 80 BELL CONNECTOR AT ONE END, 1/2 PT. GLUE IN KIT 670-123298-4						

APPROVED BY STATE	APPROVED BY RAILROAD	CAR NUMBER	SEAL NUMBER

Location: BLUFFTON OH S&E Proj. No.: 10.2205 AFE No.: F-03567 Drawing No.: LMPS07316

Store No.: P.O.Number: Date Required: Date Shipped: Vendor: Progress Rail Services

Qty.	Class-Item-CD	UI	Price per Item	Total Price	Item Description	Quantity Shipped	Quantity Installed Date Quan.	Date Quan.	Date Quan.	Quantity Returned (Credit)	Special Instructions
4	670-664917-4	EA	$90.11	$360.44	CONNECTOR KIT, WELDED FAR RAIL, CONSISTING OF RUBBER HOSE PROPERLY DRILLED, BONDSTRAND, 1 SPLICING SLEEVE, 1 REDUCING SLEEVE, 3 CLAMPS, 1 TRACK CLIP, 1 WEB WELDED TRACK CONNECTOR, 1 WELD METAL, SAFETRAN 111359-2X						
4	670-632520-4	EA	$77.63	$310.52	CONNECTOR KIT, WELDED NEAR RAIL, CONSISTING OF, RUBBER HOSE PROPERLY DRILLED, BONDSTRAND, SPLICING SLEEVE, 1 REDUCING SLEEVE, 5 CLAMPS, 1 TRACK CLIP, 1 WEB WELDED TRACK CONNECTOR, 1 WELD METAL, SAFETRAN 111359-1X						
2	670-793404-4	EA	$1,205.32	$2,410.64	COUNTERWEIGHT PKAGE, 17-24'GATE S'TRAN S- MECH ONLY, STAINLESS, TO INCLUDE HUB, SUPPORT ARMS						
6	670-760012-4	EA	$9.95	$59.70	COVER, FOR 1 WAY FLASHING LIGHT ASSY. 18 OZ. BLACK VINYL COATED NYLON. ====TO COVER 2 LAMPS====						
1	670-986650-4	EA	$354.27	$354.27	DISPOSAL, CONSTRUCTION DEBRIS AND CLEANING X'ING EQUIPMENT CONTAINER						
2	670-228165-4	EA	$12.25	$24.50	EQUALIZER, SAFETRAN 022700-1X LESS BASE, MODERN NO. 700-1 SHUNT ARRESTER TRACK CIRCUITS CR 02-197950						
1	670-000004-4	EA	$700.00	$700.00	FCC LICENSE FOR MONITOR/RADIO						
12	670-000003-4	EA	$255.85	$3,070.20	FILL/STONE #57, QUANITY IS BASED ON TRUCK LOAD PLUS DELIVERY COST						
2	670-015231-4	EA	$599.40	$1,198.80	FOUNDATION, DIXIE,S-2 GATE 2'6"X2'6"X5'6" ASSEMBLED						
2	670-005377-4	EA	$338.00	$676.00	GATE ARM, ALUMINUM, 17-24 FT, ARM ASSEMBLY, INCLUDES GATE GUARD FOR GATE LIGHT CABLE. HIGH INTENSITY VERTICAL STRIPES.						
1	670-675667-4	EA	$30,238.53	$30,238.53	GCP4000 - 1 TRK (2TC) - REDUNDANT - 40/40 AMP WIRED RACK EQUIP. FOR 6X8 XING SHELTER, (INCL. 2 TRK CHASSIS A80465, 2 TRK MODS. A80418, 2-SSCC A80405, 2 CPU A80403, 1 SEAR A80410, 1 DISPLAY A80407, , 2-40 AMP CHARGERS) IPN: 003131-1X						
1	670-477991-4	EA	$410.00	$410.00	KIT, GROUNDING ASSY FOR AL I/S INCLUDES 8 GRD RDS,200'#4WIRE,12 4 WIRE ONE-SHOTS. ERICO SBK206						
1	670-123298-4	EA	$361.54	$361.54	KIT, HARDWARE SUPPLIES REQUIRED X'ING P'CKAGES. WEB CONNECTORS FOR SHUNT(8EA) TAPE, AMPS,P'GUM PAINT,SLEEVES,TAGS,GLUE, 100 EA WHITE TAGS,)NE CAN BLUE MARKING PAINT ETC…						

APPROVED BY STATE	APPROVED BY RAILROAD	CAR NUMBER	SEAL NUMBER

Location: BLUFFTON OH S&E Proj. No.: 10.2205 AFE No.: F-03567 Drawing No.: LMPS07316

Store No.: P.O.Number: Date Required: Date Shipped: Vendor: Progress Rail Services

Qty.	Class-Item-CD	UI	Price per Item	Total Price	Item Description	Quantity Shipped	Quantity Installed Date Quan.	Date Quan.	Date Quan.	Quantity Returned (Credit)	Special Instructions
2	670-092155-4	EA	$160.00	$320.00	LAMP ASSY, LED GATE ARM KIT (INCLUDES 3 LAMPS COMPLETE WITH CABLES AND MTG. HARDWARE) REC #: 9298-1120						
2	670-005063-4	EA	$952.05	$1,904.10	LAMP ASSY, LED, 4" MAST 1 WAY LIGHTS (IPN: 042003-L484XNS)						
2	670-005058-4	EA	$1,786.08	$3,572.16	LAMP ASSY, LED, 5" MAST BACK TO BACK LIGHTS (IPN: 042003-L487XNS)						
5	255-590880-4	EA	$17.52	$87.60	LOCK, AMERICAN LOCK MODEL H-10KA KEYED ALIKE TO PRIVATE KEYWAY D456 AND STAMPED "NS SIG"						
2	610-165863-4	EA	$1,400.00	$2,800.00	MAST, 5" ALUMINUM (0&45) RIGHT FOR LIGHT UNIT & BRACKET @ 45 DEG. RIGHT W/DBL. JCT. BOX BASE #070519-43AX-2						
2	670-000985-4	EA	$312.09	$624.18	MAST, SIDELIGHT BRACKET F/5"MT. HARMON @225834-XXX, SAFETRAN 041442-26X,						
2	670-875060-4	EA	$2,596.32	$5,192.64	MECHANISM, GATE MODEL S-60, WITH DEFROSTER , WITHOUT MINI TRACKSIDE SENSOR S'TRAN # 0740007-X002A3						
2	670-000007-4	EA	$307.02	$614.04	MISC. EXPENSE, TRACK WORK (I.E. INS JTS, RODS, ETC.)						
1	000-000000-4	EA	$5,000.00	$5,000.00	MISC. EXPENSE, UNDERGROUND BORING						
1	670-008555-4	EA	$3,250.00	$3,250.00	MS4000 - 1TRK (1TC) - REDUNDANT (INCL. 1 TRK CHASSIS A80495, 1CPU A80403, 1 TRK MOD A80418)						
2	670-001347-4	EA	$59.67	$119.34	PACKAGE, HARDWARE SIGN 5 IN. MOUNTING, SERRMI A1250-5, HARMON @200965-000, OR						
1	255-646807-4	EA	$32.59	$32.59	PADLOCK, SAFETRAN PART NO. 030399-29X SCREW TYPE FOR CIR CONTROLLER AND BTY. BOX						
1	670-514605-4	EA	$11.11	$11.11	PINNACLE, W-C SECT 1-11, 4"& 5" REF K1 110-8 OR SAFETRAN NO. @035045-503X						
2	165-103293-4	EA	$75.42	$150.84	PROTECTOR, LIGHTNING & SURGE LPC 10560-51, 3 ELECTRODE WITH SPADE TERMINAL						
1	165-902002-4	EA	$297.48	$297.48	PROTECTOR, SURGE 120/240VAC, ERICO P/N EPD120/240TDFL						
4	465-002899-4	EA	$40.24	$160.96	REEL, CABLE DISPOSABLE FOR CROSSING SIGNAL PACKAGES						
2	435-805560-4	EA	$2.78	$5.56	SAND, 25LB BAG FOR CABLE ENTRANCE INTO THE SHELTER						
1	670-113448-4	EA	$910.23	$910.23	SEARIIi, (VHFC w/ANTENNA) - VHF COMMUNICATOR, SAFETRAN P/N A80276, 1/ PER CROSSING						

APPROVED BY STATE	APPROVED BY RAILROAD	CAR NUMBER	SEAL NUMBER

Location: BLUFFTON OH S&E Proj. No.: 10.2205 AFE No.: F-03567 Drawing No.: LMPS07316

Store No.: P.O.Number: Date Required: Date Shipped: Vendor: Progress Rail Services

Qty.	Class-Item-CD	UI	Price per Item	Total Price	Item Description	Quantity Shipped	Quantity Installed Date Quan.	Date Quan.	Date Quan.	Quantity Returned (Credit)	Special Instructions
1	670-749325-4	EA	$226.97	$226.97	SHELF, FOLDING, FOR LAPTOP USE IN FARADAY 6X8 SHELTER, SAFETRAN 052852-128X						
1	670-755523-4	EA	$9,325.16	$9,325.16	SHELTER, 6'X8' ALUMN FARADAY W/1EA EQUIPMENT RACK, W/CABLE CHUTES BEHIND TERMINAL BOARD, W/GEN RECEPTICAL, BREAKER BOX GFI OUTLET FOR LAPTOP SHELF SAFETRAN 058400-68-85						
3	670-586967-4	EA	$44.91	$134.73	SHUNT COVER W/LAG SCREWS, 19"X19", SERRMI #40271, ORDER 1 PER SHUNT						
3	670-688850-4	EA	$369.89	$1,109.67	SHUNT, MULTI-FREQ. #62775-3497 SAFETRAN NARROW BAND						
2	670-393331-4	EA	$53.74	$107.48	SIGN CROSSING MALFUNCTION ASSEMBLY FOR 4" AND 5" MAST, SAFETRAN #T17215						
2	670-016346-4	EA	$149.68	$299.36	SIGN, X-BUCK, HI-INTENSIVE REFLECTIVE FRT. & BACK FOR ALL STATES, SAFETRAN# 035200-91X						
1	670-682221-4	EA	$21.63	$21.63	SWITCH, MCKEEN KNIFE TEST W-C 0250-101, SAFETRAN 130078-T00478						
1	670-330382-4	RL	$18.06	$18.06	TAPE, THOR 3" DURATEC, ORANGE 1000' LENGTHS. "WARNING STOP DIGGING"						
4	670-478560-4	EA	$20.56	$82.24	TERMINAL BLOCK, ERICO 4 POST P/N B2700A2C1WH W/HARDWARE LESS LIGHTNING ARRESTOR						
100	465-999111-4	LF	$0.38	$38.00	WIRE, NO.10, 1 CONDUCTOR, CASE, FLEXIBLE 37 STRAND, 3/64 IN. INSULATION-ORDER EXT.AMT. NEEDED CR 02-620502						
100	465-458198-4	FT	$0.20	$20.00	WIRE, NO.16, 1 CONDUCTOR, CASE, FLEXIBLE, 19 STRAND, 2/64 IN. INSULATION						

Total Material: $94,111.08

APPROVED BY STATE	APPROVED BY RAILROAD	CAR NUMBER	SEAL NUMBER

SH. NO.	CONTENTS
NX1	INDEX SHEET
1	LAYOUT
2	PROFILE
3	CABLE PLAN
4	LOAD CENTER
5	B12 & B16 CHARGERS & BATTERIES
6	4000 GCP 2-TK CHASSIS & MODULE LAYOUT
7	4000 GCP PROGRAMMING SETUP
8	4000 GCP PROGRAMMING SETUP
9	CONNECTORS FOR TRACK MODULES
10	CPU MODULE, SEAR III & VHF HOOK-UPS
11	SEAR III PROGRAMMING SETUP
12	SSCC#1 MODULE HOOK-UP
13	SSCC#2 MODULE HOOK-UP
14	"A" FLASHER AND GATE LIGHTS WITH MODEL "S60" GATE MECHANISM
15	"B" FLASHER AND GATE LIGHTS WITH MODEL "S60" GATE MECHANISM
16	BACKBOARD 1A & 1B
17	REAR BACKBOARD 1A & 1B
18	FARADAY SHIELD 1A & 1B
19	FARADAY SHIELD 1C
20	HOUSE SIDE C LAYOUT & RACK PLACEMENT
21	HOUSE SIDE A LAYOUT
22	HOUSE SIDE B LAYOUT & TOP VIEW

ALL NEW
#10.2205
08-23-16
PRS

IN SERVICE_____ _____
SIGNED DATE

☐ S&E ENGINEERING COPY
☐ CONSTRUCTION OFFICE COPY
RETURN TO S&E ENG. AFTER COMPLETION
☐ FIELD COPY
RETURN TO CASE AFTER COMPLETION
☐ PROJECT ENGINEER COPY

INDEX SHEET

DESIGNED BY: TMW 08-23-16	NORFOLK SOUTHERN	
DRAWN BY: PRS 08-23-16	OFFICE OF ASS'T. VICE PRESIDENT COMM. & SIGNAL, ATLANTA, GA.	M.P.: SP-73.16
CHECKED BY: JMW 10-10-16	BLUFFTON, OH FLGS AT CR-15 (COUNTY LINE ROAD)	
IN SERVICE: - -	LIMA DISTRICT	FILE No. R-
	CADD or DWG. No. LMPS07316.NX1	SHEET No. 1 of 1

REVISION INITIALS											

PROPERTY
NORFOLK SOUTHERN RAILWAY CO.

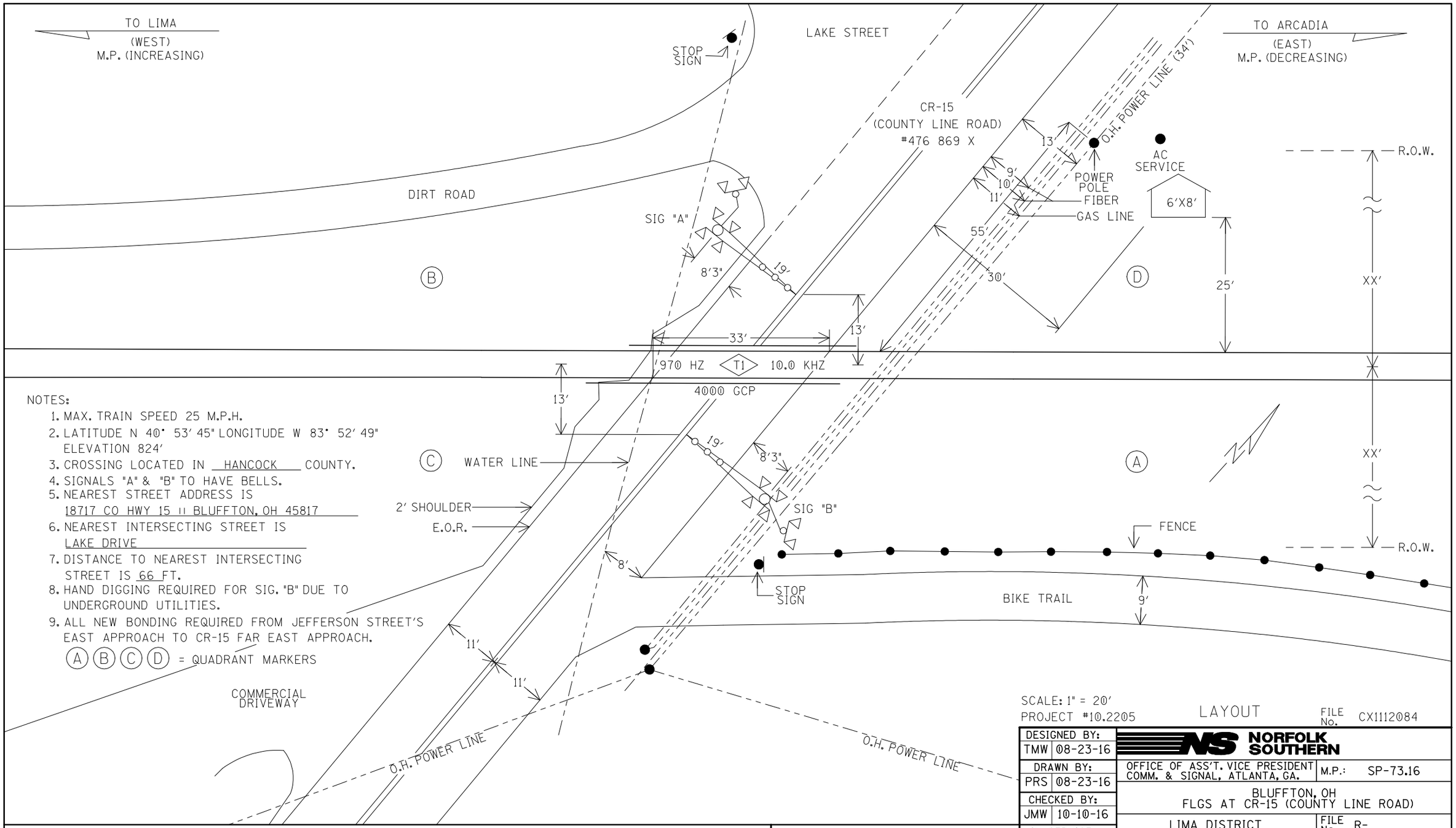

NOTES:

1. MAX. TRAIN SPEED 25 M.P.H.
2. LATITUDE N 40° 53' 45" LONGITUDE W 83° 52' 49" ELEVATION 824'
3. CROSSING LOCATED IN HANCOCK COUNTY.
4. SIGNALS "A" & "B" TO HAVE BELLS.
5. NEAREST STREET ADDRESS IS 18717 CO HWY 15 ıı BLUFFTON, OH 45817
6. NEAREST INTERSECTING STREET IS LAKE DRIVE
7. DISTANCE TO NEAREST INTERSECTING STREET IS 66 FT.
8. HAND DIGGING REQUIRED FOR SIG. "B" DUE TO UNDERGROUND UTILITIES.
9. ALL NEW BONDING REQUIRED FROM JEFFERSON STREET'S EAST APPROACH TO CR-15 FAR EAST APPROACH.

(A) (B) (C) (D) = QUADRANT MARKERS

SCALE: 1" = 20'
PROJECT #10.2205

LAYOUT

FILE No. CX1112084

DESIGNED BY: TMW 08-23-16	NORFOLK SOUTHERN		
DRAWN BY: PRS 08-23-16	OFFICE OF ASS'T. VICE PRESIDENT COMM. & SIGNAL, ATLANTA, GA.	M.P.:	SP-73.16
CHECKED BY: JMW 10-10-16	BLUFFTON, OH FLGS AT CR-15 (COUNTY LINE ROAD)		
IN SERVICE: - -	LIMA DISTRICT	FILE No.	R-
	CADD or DWG. No. LMPS07316.01	SHEET No.	1 of 22

REVISION INITIALS											

PROPERTY
NORFOLK SOUTHERN RAILWAY CO.

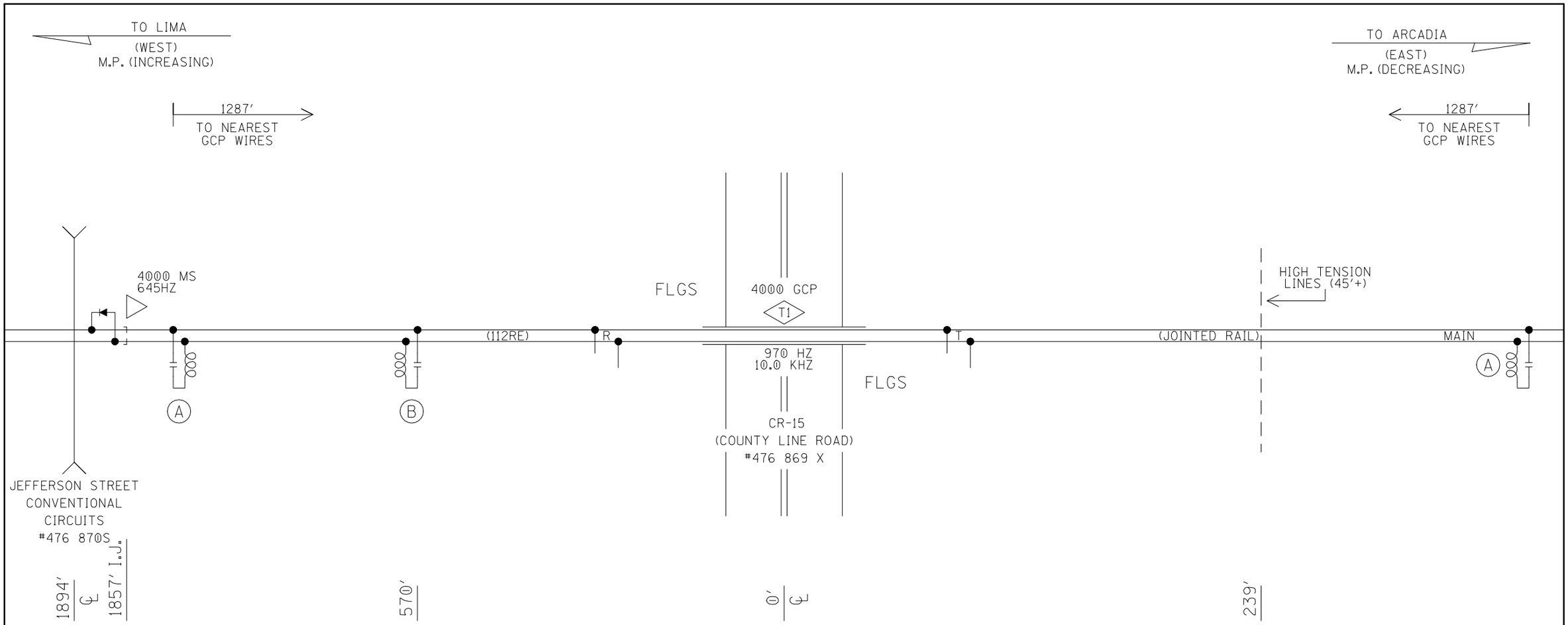

CONSTRUCTION NOTES:

1. REMOVE RING-10 CIRCUIT AND I.J.'S FOR JEFFERSON STREET'S D13T TRACK CIRCUIT.
2. ORDER NEW BONDS FOR ENTIRE APPROACH. ONLY SINGLE BONDS EXIST FOR EXISTING RING-10 APPROACH CIRCUIT.

(A)– MF-NBS 62775-3497 (970HZ)

(B)– MF-NBS 62775-3497 (645HZ)

PROFILE

DESIGNED BY: TMW 08-23-16	NORFOLK SOUTHERN		
DRAWN BY: PRS 08-23-16	OFFICE OF ASS'T. VICE PRESIDENT COMM. & SIGNAL, ATLANTA, GA.	M.P.:	SP-73.16
CHECKED BY: JMW 10-10-16	BLUFFTON, OH FLGS AT CR-15 (COUNTY LINE ROAD)		
IN SERVICE: - -	LIMA DISTRICT	FILE No.	R-
	CADD or DWG. No. LMPS07316.02	SHEET No.	2 of 22

REVISION INITIALS											

PROPERTY
NORFOLK SOUTHERN RAILWAY CO.

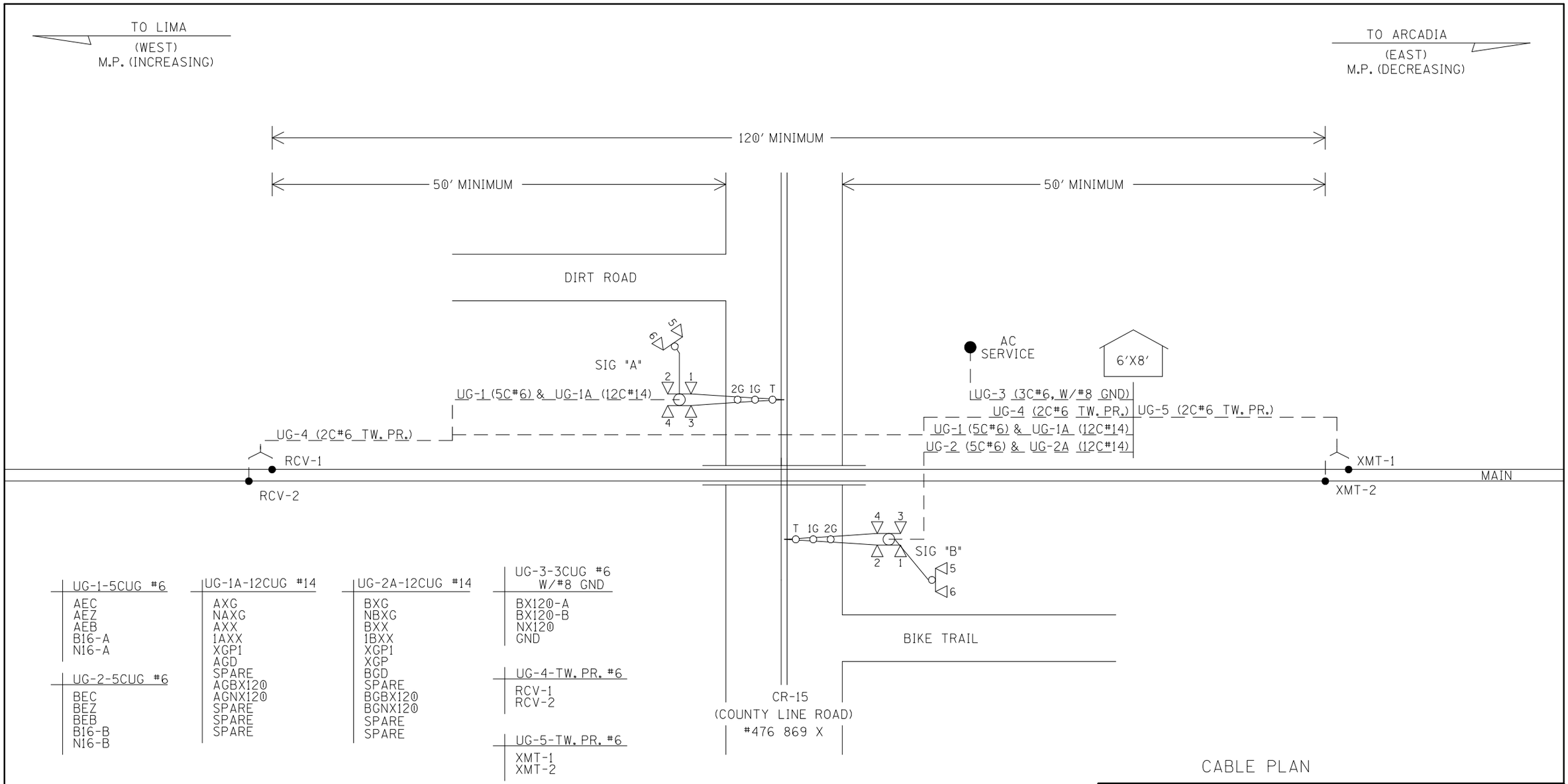

UG-1-5CUG #6
AEC
AEZ
AEB
B16-A
N16-A

UG-2-5CUG #6
BEC
BEZ
BEB
B16-B
N16-B

UG-1A-12CUG #14
AXG
NAXG
AXX
1AXX
XGP1
AGD
SPARE
AGBX120
AGNX120
SPARE
SPARE
SPARE

UG-2A-12CUG #14
BXG
NBXG
BXX
1BXX
XGP1
XGP
BGD
SPARE
BGBX120
BGNX120
SPARE
SPARE

UG-3-3CUG #6 W/#8 GND
BX120-A
BX120-B
NX120
GND

UG-4-TW. PR. #6
RCV-1
RCV-2

UG-5-TW. PR. #6
XMT-1
XMT-2

CABLE PLAN

DESIGNED BY: TMW 08-23-16	NORFOLK SOUTHERN		
DRAWN BY: PRS 08-23-16	OFFICE OF ASS'T. VICE PRESIDENT COMM. & SIGNAL, ATLANTA, GA.	M.P.: SP-73.16	
CHECKED BY: JMW 10-10-16	BLUFFTON, OH FLGS AT CR-15 (COUNTY LINE ROAD)		
IN SERVICE: - -	LIMA DISTRICT	FILE No. R-	
	CADD or DWG. No. LMPS07316.03	SHEET No. 3 of 22	

REVISION INITIALS											

PROPERTY
NORFOLK SOUTHERN RAILWAY CO.

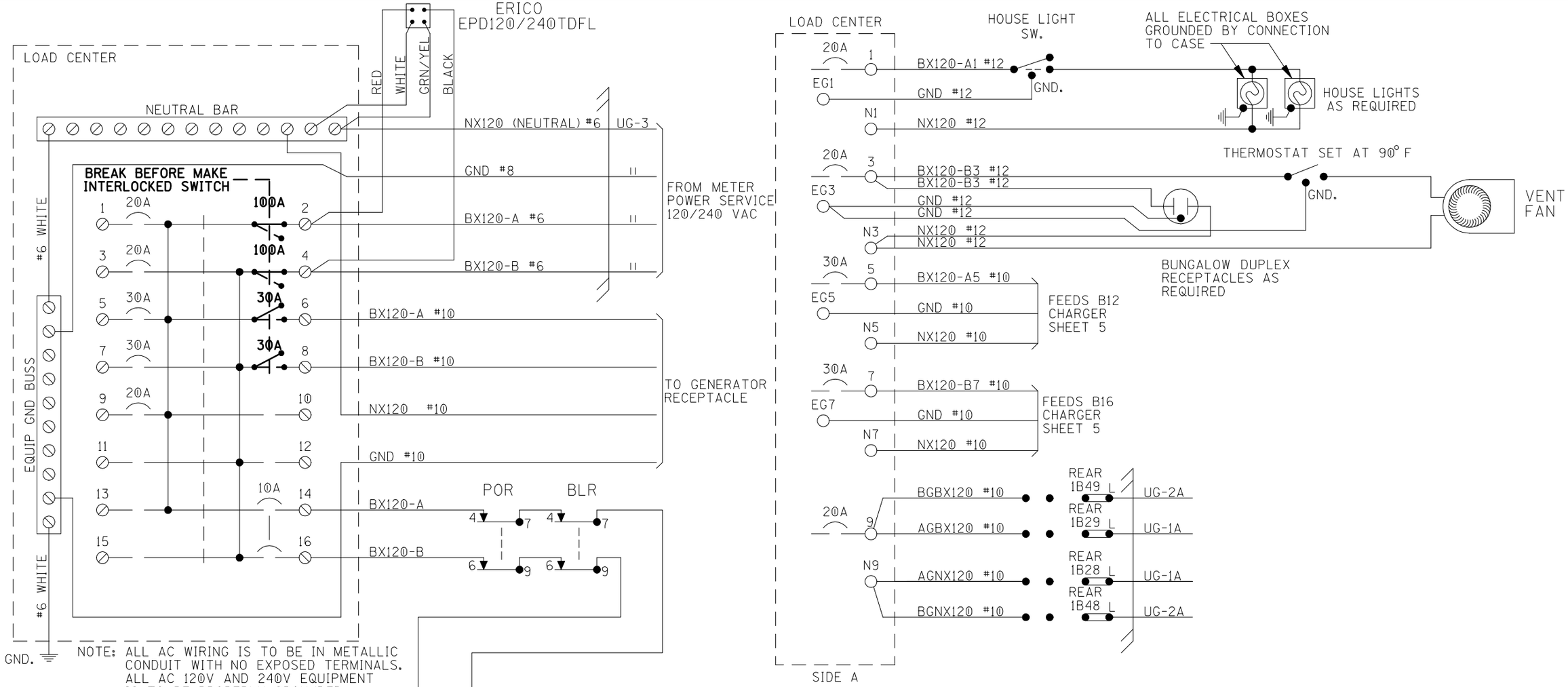

NOTE:
ALL WIRING TO BE #16AWG
UNLESS NOTED OTHERWISE.

GENERATOR RECEPTACLE:
MALE CONNECTOR - NEMA L1430-FI

LOAD CENTER

DESIGNED BY: TMW 08-23-16	NORFOLK SOUTHERN		
DRAWN BY: PRS 08-23-16	OFFICE OF ASS'T. VICE PRESIDENT COMM. & SIGNAL, ATLANTA, GA.	M.P.:	SP-73.16
CHECKED BY: JMW 10-10-16	BLUFFTON, OH FLGS AT CR-15 (COUNTY LINE ROAD)		
IN SERVICE: - -	LIMA DISTRICT	FILE No.	R-
	CADD or DWG. No. LMPS07316.04	SHEET No.	4 of 22

REVISION INITIALS										

PROPERTY
NORFOLK SOUTHERN RAILWAY CO.

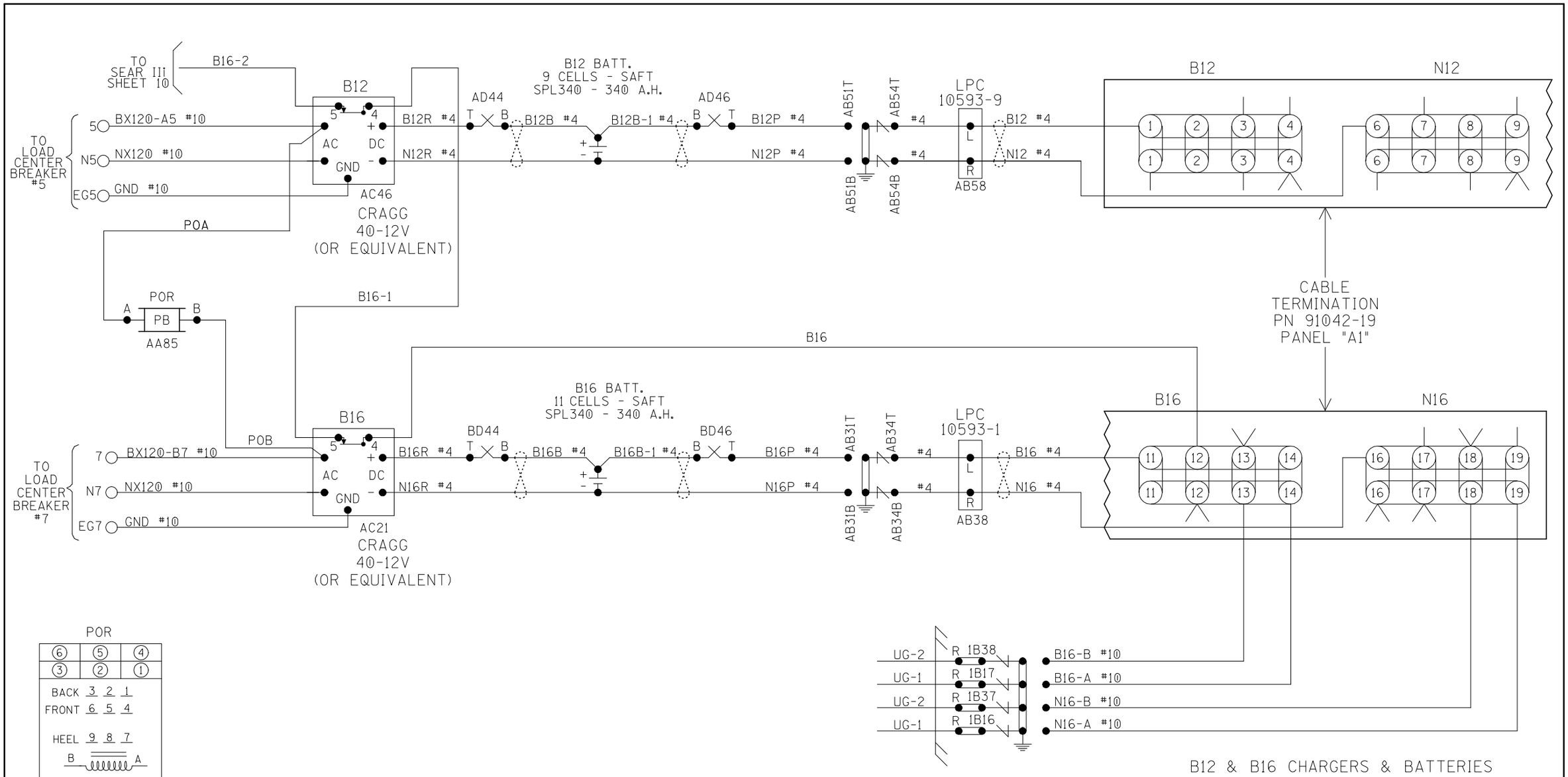

B12 & B16 CHARGERS & BATTERIES

NOTE:
ALL WIRING TO BE #16AWG UNLESS NOTED OTHERWISE.

DESIGNED BY: TMW 08-23-16	NORFOLK SOUTHERN		
DRAWN BY: PRS 08-23-16	OFFICE OF ASS'T. VICE PRESIDENT COMM. & SIGNAL, ATLANTA, GA.	M.P.:	SP-73.16
CHECKED BY: JMW 10-10-16	BLUFFTON, OH FLGS AT CR-15 (COUNTY LINE ROAD)		
IN SERVICE: - -	LIMA DISTRICT	FILE No.	R-
	CADD or DWG. No. LMPS07316.05	SHEET No.	5 of 22

REVISION INITIALS

PROPERTY
NORFOLK SOUTHERN RAILWAY CO.

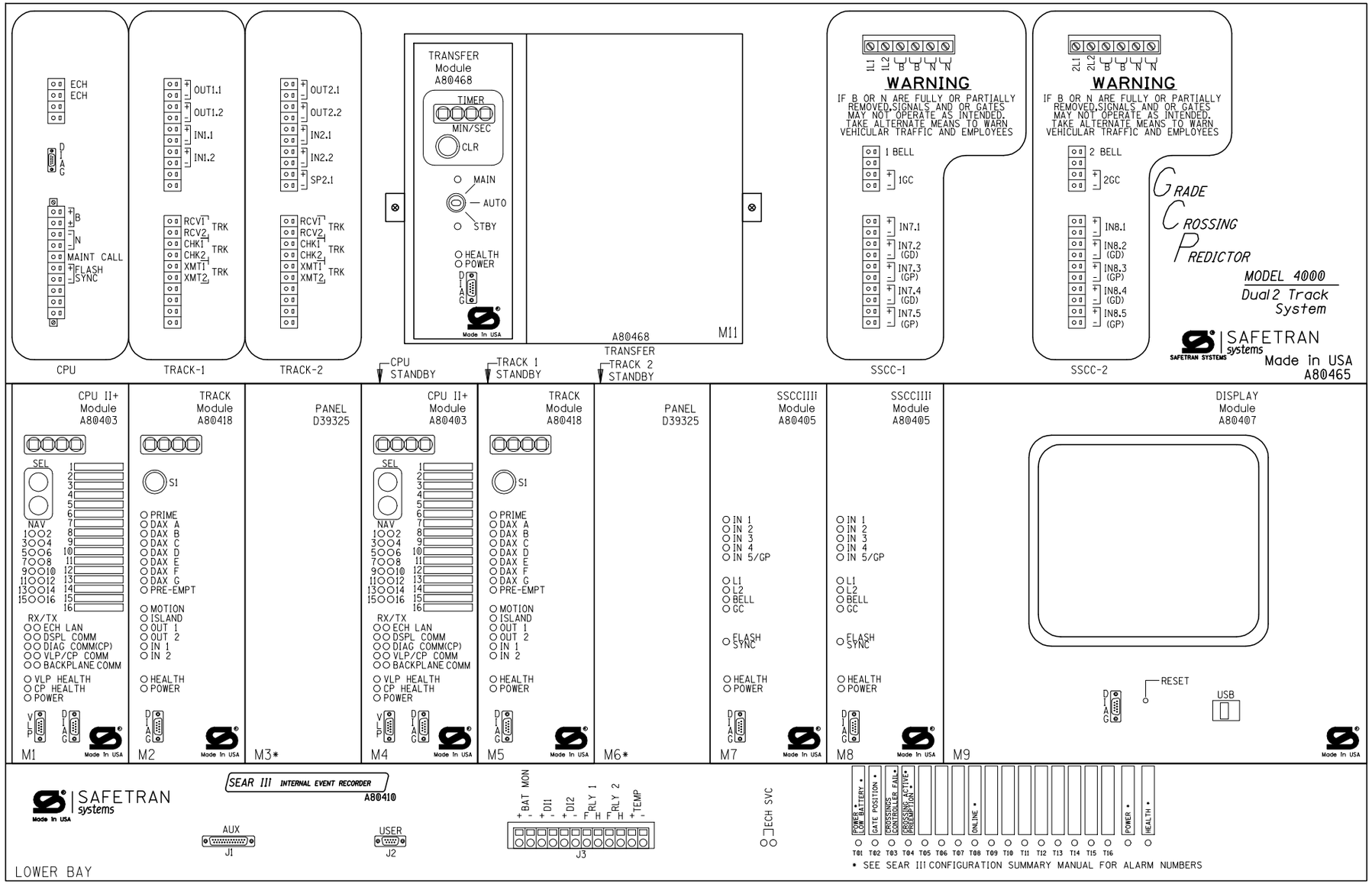

RACK 1
SIDE C

WARNING

REMOVAL OF THE SSCCIIIi MODULE WILL CAUSE THE GATE(S) TO DROP BUT THE LIGHTS WILL NOT ACTIVATE

CAUTION

ASSURE CORRECT POLARITY OF THE SSCCIIIi MODULE OR SEVERE DAMAGE WILL OCCUR.

ATTENTION!

ENSURE THE DISPLAY MODULE HEATER IS DISABLED. LEAVING THE DISPLAY HEATER ENABLED WILL REDUCE THE AMOUNT OF BATTERY STANDBY TIME IN THE EVENT OF AN AC POWER FAILURE.

HEATER FUNCTION IS JUMPER SELECTABLE ON THE DISPLAY MODULE BOARD.
THREE OPTIONS ARE AVAILABLE:
NORMAL LCD HTR (DEFAULT)
HI CURRENT
NO JUMPER (HEATER DISABLED)

* = MAIN AND STANDBY MAY USE RIO IN TRACK 2 SLOTS (M3 AND M6)

4000 GCP 2-TK CHASSIS & MODULE LAYOUT

DESIGNED BY: TMW 08-23-16	NORFOLK SOUTHERN		
DRAWN BY: PRS 08-23-16	OFFICE OF ASS'T. VICE PRESIDENT COMM. & SIGNAL, ATLANTA, GA.	M.P.: SP-73.16	
CHECKED BY: JMW 10-10-16	BLUFFTON, OH FLGS AT CR-15 (COUNTY LINE ROAD)		
IN SERVICE: - -	LIMA DISTRICT	FILE No. R-	
	CADD or DWG. No. LMPS07316.06	SHEET No. 6 of 22	

REVISION INITIALS											

PROPERTY
NORFOLK SOUTHERN RAILWAY CO.

Program Report

Location and SIN

DOT Number: 476869X
Milepost Number: SP-73.16
Site Name: CR-15 (COUNTY LINE ROAD)

SIN: 755023506816

MCF and Template Selection

MCF Name: GCP-T6X-02-1.mcf
MCF Revision: 021
MCFCRC: 6076E435

Template = 1A:6 Trk Bi

Check Numbers

Office Check No.(DT 4.6.0): 10CA7658
Office Check Number: 10CA7658
Config. Check Number: 46E76909
(Based on MCF Revision 021)

Program

BASIC: module configuration
Track 1 Slot = Track
Track 2/RIO 1 Slot = Not Used
Track 3 Slot = Not Used
Track 4 Slot = Not Used
Track 5/RIO 2 Slot = Not Used
Track 6/RIO 3 Slot = Not Used
SSCC-1 Slot = SSCC3i
SSCC-2 Slot = SSCC3i
SEAR Used = Yes

BASIC: MS/GCP operation
Track 1: MS/GCP Operation = Yes

BASIC: island operation
Track 1: Island Used = Internal

BASIC: preemption
Preempt Logic = No

BASIC: radio Dax links
Radio DAX link A Used = No
Radio DAX link B Used = No

BASIC: Vital Comms links
Vital Comms link 1 Used = No
Vital Comms link 2 Used = No

PREDICTORS: track 1
Track 1: Prime Used = Yes
Track 1: Dax A Used = No
Track 1: Dax B Used = No
Track 1: Dax C Used = No
Track 1: Dax D Used = No
Track 1: Dax E Used = No
Track 1: Dax F Used = No
Track 1: Dax G Used = No

GCP: track 1
Track 1: GCP Freq Category = Standard
Track 1: GCP Frequency = 970 Hz
Track 1: Approach Distance = 1287 ft
Track 1: Uni/Bi/Sim-Bidirnl = Bidirnl
Track 1: GCP Transmit Level = Medium
Track 1: Island Connection = Isl1
Track 1: Island Distance = 134 ft
Track 1: Computed Distance = 9999 ft
Track 1: Linearization Steps = 100

GCP: track 1 enhanced det
Track 1: Inbound PS Sensitivity = Off
Track 1: Speed Limiting Used = Yes
Track 1: Outbound False Act Lvl = Normal
Track 1: Outbound PS Timer = 20 sec
Track 1: Trailing Switch Logic = On
Track 1: Post Joint Detn Time = 15 sec
Track 1: Adv Appr Predn = No
Track 1: Cancel Pickup Delay = This Isl

GCP: track 1 prime
Track 1: Prime Warning Time = 30 sec
Track 1: Prime Offset Distance = 0 ft
Track 1: Switch MS EZ Level = 10
Track 1: Prime MS/GCP Mode = Pred
Track 1: Prime Pickup Delay = 15 sec
Track 1: Prime UAX = Not Used

GCP: track 1 pos start
Track 1: Positive Start = Off
Track 1: Sudden Shnt Det Used = No
Track 1: Low EZ Detection Used = No

GCP: track 1 MS Control
Track 1: MS/GCP Ctrl IP Used = No
Track 1: MS Sensitivity Level = 0
Track 1: Compensation Level = 1300
Track 1: Warn Time-Ballast Comp = High
Track 1: Low EX Adjustment = 39
Track 1: Bidirn Dax Passthru = No
Track 1: False Act on Train Stop = No
Track 1: EX Limiting Used = Yes
Track 1: EZ Correction Used = Yes

ISLAND: track 1
Track 1: Isl Frequency = 10.0 kHz
Track 1: Pickup Delay (2s +) = 0 sec
Track 1: Isl Enable IP Used = No

AND: track Anding
AND 1 XR Used = Yes
AND 2 Used = No
AND 3 Used = No
AND 4 Used = No
AND 5 Used = No
AND 6 Used = No
AND 7 Used = No
AND 8 Used = No

AND: AND 1 XR
AND 1 XR Track 1 = Prime
AND 1 Enable Used = Yes
And 1 Enable Pickup = 5 sec
AND 1 Enable Drop = 0 sec
AND 1 Wrap Used = No

ADVANCED: MS restart
MS/GCP Restart Used = No

ADVANCED: out of service
OOS Control = Display+OOS IPs
OOS Timeout = Yes
OOS Timeout = 1 hrs

ADVANCED: out of service 2
T1 OOS Control = OOS Input 1

ADVANCED: track wrap circuits
Wrap LOS Timer = 5 sec
Track 1 Wrap Used = No

ADVANCED: trk 1 overrides
Track 1: All Predictors Override Used = No

ADVANCED: OR logic
OR 1 Used = No
OR 2 Used = No
OR 3 Used = No
OR 4 Used = No

ADVANCED: internal I/O 1
Pass Thrus = No
Int.1 Sets = Not Used
Int.1 Set by = Not Used
Int.2 Sets = Not Used
Int.2 Set by = Not Used
Int.3 Sets = Not Used
Int.3 Set by = Not Used
Int.4 Sets = Not Used
Int.4 Set by = Not Used

ADVANCED: internal I/O 2
Int.5 Sets = Not Used
Int.5 Set by = Not Used
Int.6 Sets = Not Used
Int.6 Set by = Not Used
Int.7 Sets = Not Used
Int.7 Set by = Not Used
Int.8 Sets = Not Used
Int.8 Set by = Not Used

ADVANCED: internal I/O 3
Int.9 Sets = Not Used
Int.9 Set by = Not Used
Int.10 Sets = Not Used
Int.10 Set by = Not Used
Int.11 Sets = Not Used
Int.11 Set by = Not Used
Int.12 Sets = Not Used
Int.12 Set by = Not Used

ADVANCED: internal I/O 4
Int.13 Sets = Not Used
Int.13 Set by = Not Used
Int.14 Sets = Not Used
Int.14 Set by = Not Used
Int.15 Sets = Not Used
Int.15 Set by = Not Used
Int.16 Sets = Not Used
Int.16 Set by = Not Used

ADVANCED: site options
Daylight Savings = On
Units = Standard
Maint Call Rpt IP Used = No
Emergency Activate IP = No
EZ/EX Logging = Change
EZ/EX Point Change = 3

SSCC
Gates Used = Yes
SSCC1+2 GPs Coupled = Yes
Min Activation = 0 sec
Rmt Activation Cancel = 2 min
Bell On Gate Rising = No
Mute Bell On Gate Down = No
SSCC IV Controller Used = No

SSCC: 1
SSCC-1 Activation = AND 1 XR
SSCC-1 Gate Delay = 6 sec
SSCC-1 Number of GPs = 1
SSCC-1 Number of GDs = 2
SSCC 1: Flash Rate = 40
SSCC 1: Low Battery Detection = No
SSCC 1: Flash Sync = master
SSCC 1: Invert Gate Output = No
SSCC 1: Lamp Neutral Test = Off
Aux-1 Xng Ctrl Used = No

SSCC: 2
SSCC-2 Activation = AND 1 XR
SSCC-2 Gate Delay = 6 sec
SSCC-2 Number of GPs = 0
SSCC-2 Number of GDs = 0
SSCC 2: Flash Rate = 40
SSCC 2: Low Battery Detection = No
SSCC 2: Flash Sync = slave
SSCC 2: Invert Gate Output = No
SSCC 2: Lamp Neutral Test = Off
Aux-2 Xng Ctrl Used = No

OUTPUT: assignment page 1
OUT 1.1 = Not Used
OUT 1.2 = Not Used

INPUT: assignment page 1
IN 1.1 = Not Used
IN 1.2 = Not Used

IO: assignment SSCC
OUT GC 1 = Gate Output 1
OUT GC 2 = Gate Output 2
IN 7.1 = Not Used
IN 7.2 = GD 1.2
IN 7.3 = AND 1 XR Enable
IN 7.4 = GD 1.1
IN 7.5 = GP 1.1
IN 8.1 = Out Of Service IP 1
IN 8.2 = Not Used
IN 8.3 = Not Used

4000 GCP PROGRAMMING SETUP

DESIGNED BY: TMW 08-23-16	NORFOLK SOUTHERN		
DRAWN BY: PRS 08-23-16	OFFICE OF ASS'T. VICE PRESIDENT COMM. & SIGNAL, ATLANTA, GA.	M.P.: SP-73.16	
CHECKED BY: JMW 10-10-16	BLUFFTON, OH FLGS AT CR-15 (COUNTY LINE ROAD)		
IN SERVICE: - -	LIMA DISTRICT	FILE No. R-	
	CADD or DWG. No. LMPS07316.07	SHEET No. 7 of 22	

REVISION INITIALS											

PROPERTY
NORFOLK SOUTHERN RAILWAY CO.

IN 8.4 = Not Used
IN 8.5 = Not Used

SEAR
SEAR Subnode = 3
DI 1 = Not Used
DI 2 = Not Used
Rly 1 = General
Rly 2 = Not Used

SEAR: inputs
SP 2.1 = POK 1
SP 3.1 = Not Used
SP 4.1 = Not Used
SP 5.1 = Not Used
SP 6.1 = Not Used

SEAR: slot 1-4 inputs
IN 1.1 = Not Used
IN 1.2 = Not Used
IN 2.1 = Not Used
IN 2.2 = Not Used
IN 3.1 = Not Used
IN 3.2 = Not Used
IN 4.1 = Not Used
IN 4.2 = Not Used

SEAR: inputs slot 5
IN 5.1 = Not Used
IN 5.2 = Not Used

SEAR: inputs slot 6
IN 6.1 = Not Used
IN 6.2 = Not Used

SEAR: slot 7-8 inputs
IN 7.1 = Not Used
IN 8.2 = Not Used
IN 8.3 = Not Used
IN 8.4 = Not Used
IN 8.5 = Not Used

SITE: programming
Radio Subnode = 1
Field Password = Off
Low Battery Enabled = Off

Configuration Package File

Filename: LMPS07316.pac
Date/Time: 10/07/2016 10:52:54
DT Version: 5.7.3

4000 GCP PROGRAMMING SETUP

DESIGNED BY: TMW 08-23-16	NORFOLK SOUTHERN		
DRAWN BY: PRS 08-23-16	OFFICE OF ASS'T. VICE PRESIDENT COMM. & SIGNAL, ATLANTA, GA.	M.P.: SP-73.16	
CHECKED BY: JMW 10-10-16	BLUFFTON, OH FLGS AT CR-15 (COUNTY LINE ROAD)		
IN SERVICE: - -	LIMA DISTRICT	FILE No. R-	
	CADD or DWG. No. LMPS07316.08	SHEET No. 8 of 22	

REVISION INITIALS											

PROPERTY
NORFOLK SOUTHERN RAILWAY CO.

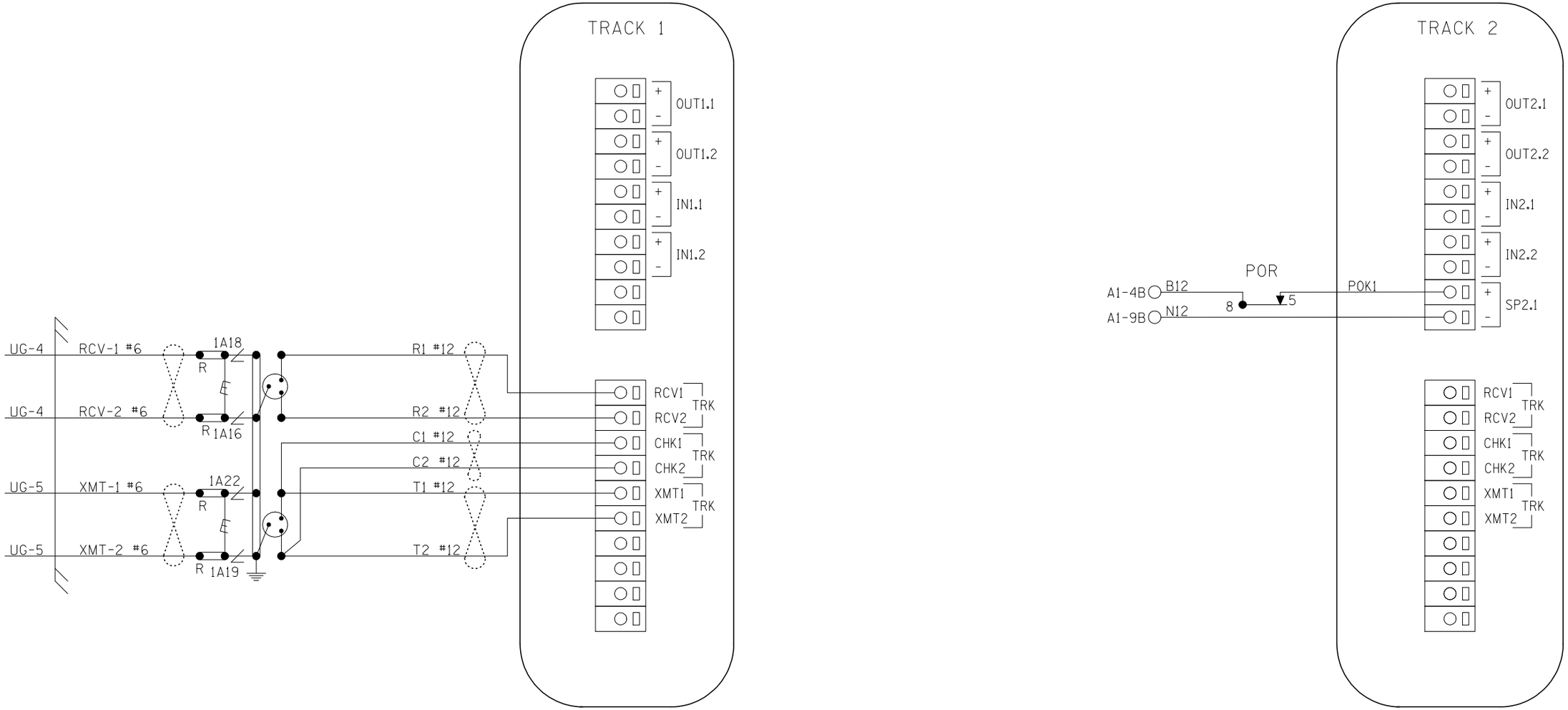

CONNECTORS FOR TRACK MODULES

NOTES:
ALL WIRING TO BE #16AWG
UNLESS NOTED OTHERWISE.

= TWIST

DESIGNED BY: TMW 08-23-16	NORFOLK SOUTHERN
DRAWN BY: PRS 08-23-16	OFFICE OF ASS'T. VICE PRESIDENT COMM. & SIGNAL, ATLANTA, GA. — M.P.: SP-73.16
CHECKED BY: JMW 10-10-16	BLUFFTON, OH FLGS AT CR-15 (COUNTY LINE ROAD)
IN SERVICE: - -	LIMA DISTRICT — FILE No. R-
	CADD or DWG. No. LMPS07316.09 — SHEET No. 9 of 22

REVISION INITIALS

PROPERTY
NORFOLK SOUTHERN RAILWAY CO.

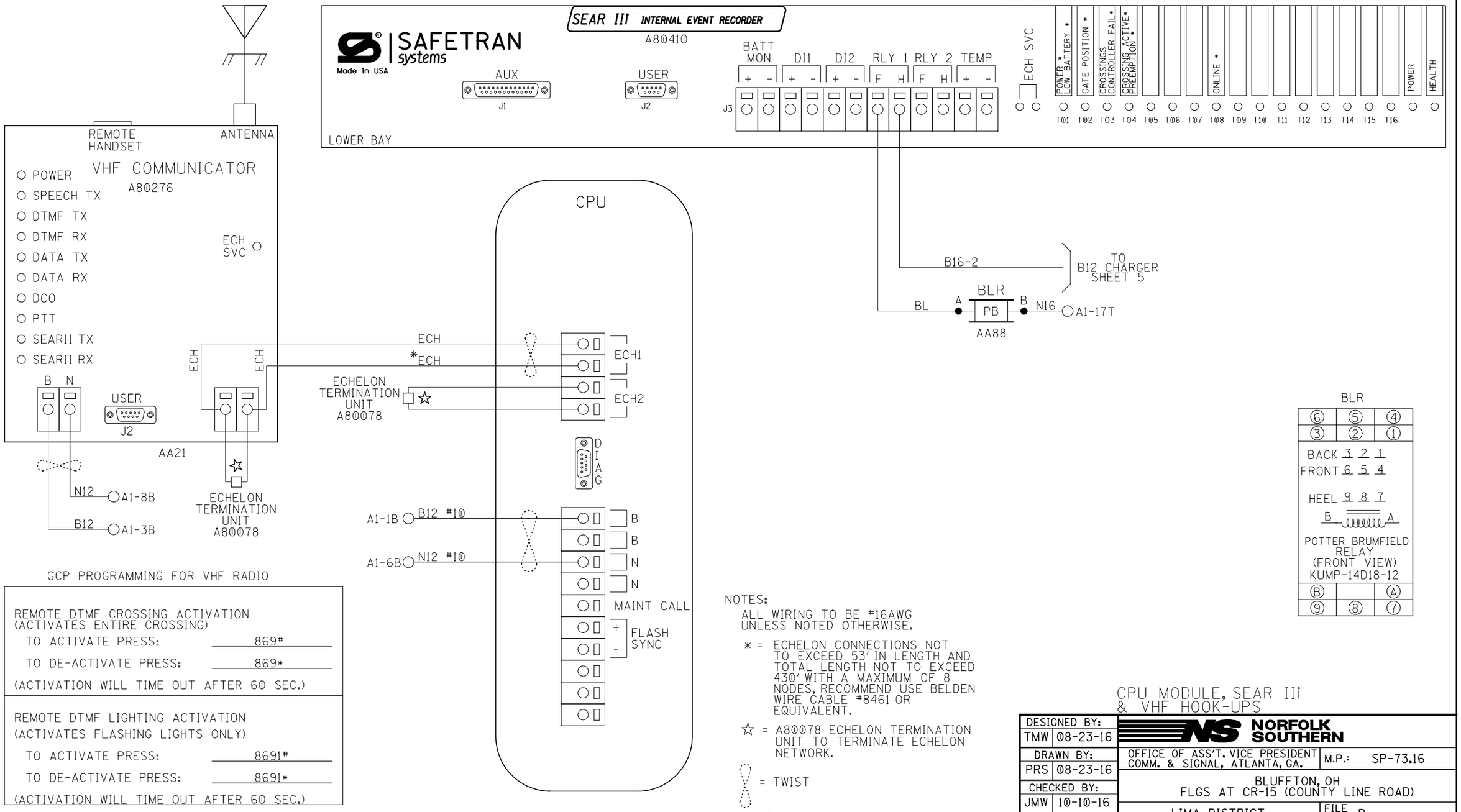

GCP PROGRAMMING FOR VHF RADIO

REMOTE DTMF CROSSING ACTIVATION
(ACTIVATES ENTIRE CROSSING)

TO ACTIVATE PRESS: 869#

TO DE-ACTIVATE PRESS: 869*

(ACTIVATION WILL TIME OUT AFTER 60 SEC.)

REMOTE DTMF LIGHTING ACTIVATION
(ACTIVATES FLASHING LIGHTS ONLY)

TO ACTIVATE PRESS: 8691#

TO DE-ACTIVATE PRESS: 8691*

(ACTIVATION WILL TIME OUT AFTER 60 SEC.)

	SITE SET UP PROCEDURE	
	FUNCTION	LED DISPLAY
	DATE/TIME	
	AUTOMATIC DST ADJUSTMENT	YES
	TIME ZONE	EST
	SITE NAME	CR-15 (COUNTY LINE ROAD)
	MILEPOST	SP-73.16
	DOT #	476 869X
	TESTER TYPE	CROSSING
	DATE FORMAT	MM-DD-YYYY
	TEMP FORMAT	FAHRENHEIT
	INDICATE HOLD (SEC)	0
	INDICATE REFRESH (SEC)	60
	SITE ATCS	7.550.235.068.03.01
	SITE TYPE	NO COMMUNICATION
**	OFFICE ATCS ADDRESS	2.550.00.0000
**	PRIMARY HOP ADDR	7.RRR.LLL.GGG.XX.XX
**	BACKUP HOP ADDR 1	7.RRR.LLL.GGG.XX.XX
**	BACKUP HOP ADDR 2	7.RRR.LLL.GGG.XX.XX
**	POLL ID	1
**	MODE	GEN/ATCS
**	WAMS XID	DISABLED
**	OFFICE COMM DEVICE	MCM (ECHELON)
**	RADIO ATCS ADDR	7.RRR.LLL.GGG.01.01
**	PHONE #	(OFFICE NUMBER)
**	INIT STRING	
**	FIELD COMM DEVICE	NONE
***	USER PORT BAUD	57600
***	USER PORT DATA BITS	8
***	USER PORT PARITY	NONE
***	USER PORT STOP BITS	1
***	USER PORT FLOW CONTROL	NONE
***	AUX PORT BAUD	9600
***	AUX PORT DATA BITS	8
***	AUX PORT PARITY	NONE
***	AUX PORT STOP BITS	1
***	AUX PORT FLOW CONTROL	NONE

	CONTROL SYSTEM CONFIGURATION MENU QUESTIONS	
	THE QUESTION	SELECT FROM MENU OPTION
	RESET NAMES AND MODULES?	YES
	RAILROAD NUMBER	550
	CROSSING CONFIGURATION	NORMAL
	AND 1 USED AS XR?	YES
	AND 2 USED AS XR?	NO
	AND 3 USED AS XR?	NO
	AND 4 USED AS XR?	NO
	AND 5 USED AS XR?	NO
	AND 6 USED AS XR?	NO
	AND 7 USED AS XR?	NO
	AND 8 USED AS XR?	NO
*	XR CONTROLLED BY FOREIGN RR	NO
	ENTRANCE GATES	2
	85% VOLTAGE RELAY OUT	YES
*	GATES CONTROLLED BY FOREIGN RR	0
	BATTERY BANKS	2
	BATTERY MON USED	NO
	PREEMPTION	NO
	INTERNAL CROSSING CONTROLLERS	2
	EXTERNAL CROSSING CONTROLLERS	0
	VHF COMMUNICATOR	YES
	DTMF ACTIVATION	YES
****	ACTIVATION CODE	869
	ACTIVATION TIMEOUT (SECONDS)	60
	ILOD MODULES	0
*****	ANY LED BULBS USED	NO
	VHF VOICE CHANNEL	2
	VHF DATA CHANNEL	2
	USE CELL MODEM NON-CRITICAL FEATURE	NO

PROGRAM MENU QUESTIONS	PROGRAM
EDIT DIGITAL INPUTS	NO
EDIT BATTERIES	NO
EDIT RELAYS	NO
EDIT INDICATOR LEDS	NO
EDIT TEST LEDS	NO
EDIT ILOD SENSORS	NO
EDIT VHF SETTINGS	NO
GCP4K ATCS SUBNODE	16

NOTES:

* = DISPLAYED IF CROSSING CONFIGURATION IS SPLIT GATE.

** = IF SITE TYPE = NO COMMUNICATION, THEN THESE OPTIONS ARE NOT DISPLAYED.

*** = THESE SETTINGS SHOULD BE LEFT AT THE DEFAULT SETTING.

**** = USE LAST 3 NUMBERS FROM DOT NUMBER.

***** = IF ILOD MODULE >0.

TO CONFIGURE SEARIII PRESS SITE SETUP KEY.
USE ARROW KEYS TO MAKE SELECTION,
PRESS ENTER AFTER SELECTION HAS BEEN MADE.

SEAR III PROGRAMMING SETUP

DESIGNED BY: TMW 08-23-16	NORFOLK SOUTHERN		
DRAWN BY: PRS 08-23-16	OFFICE OF ASS'T. VICE PRESIDENT COMM. & SIGNAL, ATLANTA, GA.	M.P.: SP-73.16	
CHECKED BY: JMW 10-10-16	BLUFFTON, OH FLGS AT CR-15 (COUNTY LINE ROAD)		
IN SERVICE: - -	LIMA DISTRICT	FILE No. R-	
	CADD or DWG. No. LMPS07316.11	SHEET No. 11 of 22	

REVISION INITIALS											

PROPERTY
NORFOLK SOUTHERN RAILWAY CO.

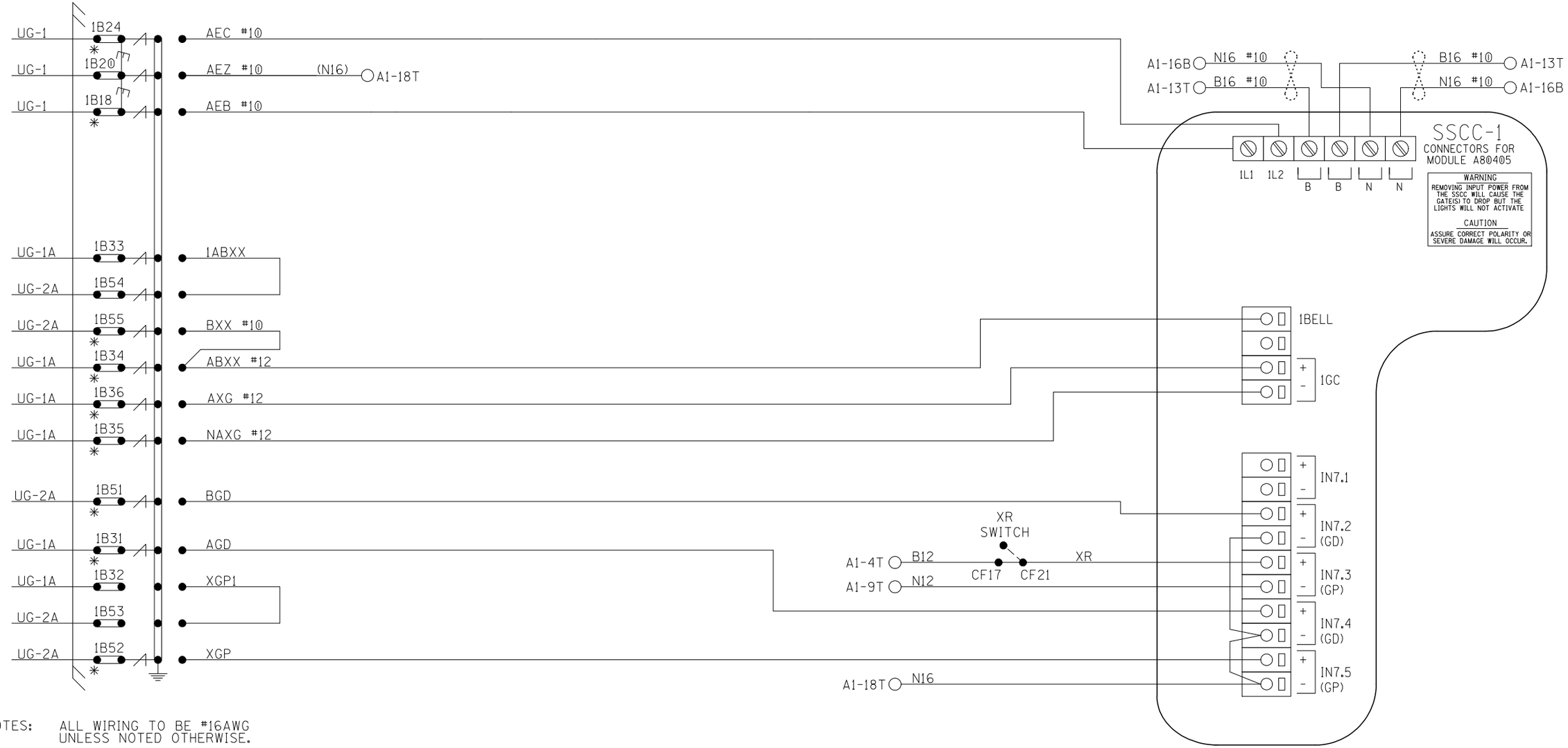

NOTES: ALL WIRING TO BE #16AWG
UNLESS NOTED OTHERWISE.

* = TEST LINKS MUST BE OPENED TEMPORARILY FOR NEW COLD START OF NEW OR REPLACEMENT SSCC MODULE AND CAN ONLY BE CLOSED IN SEQUENCE WITH MFR. INSTRUCTIONS: SECTION 8 OF THE GCP 4000 REFERENCE MANUAL.

= TWIST

SSCC#1 MODULE HOOK-UP

DESIGNED BY: TMW 08-23-16	NORFOLK SOUTHERN	
DRAWN BY: PRS 08-23-16	OFFICE OF ASS'T. VICE PRESIDENT COMM. & SIGNAL, ATLANTA, GA.	M.P.: SP-73.16
CHECKED BY: JMW 10-10-16	BLUFFTON, OH FLGS AT CR-15 (COUNTY LINE ROAD)	
IN SERVICE: - -	LIMA DISTRICT	FILE No. R-
	CADD or DWG. No. LMPS07316.12	SHEET No. 12 of 22

REVISION INITIALS										

PROPERTY
NORFOLK SOUTHERN RAILWAY CO.

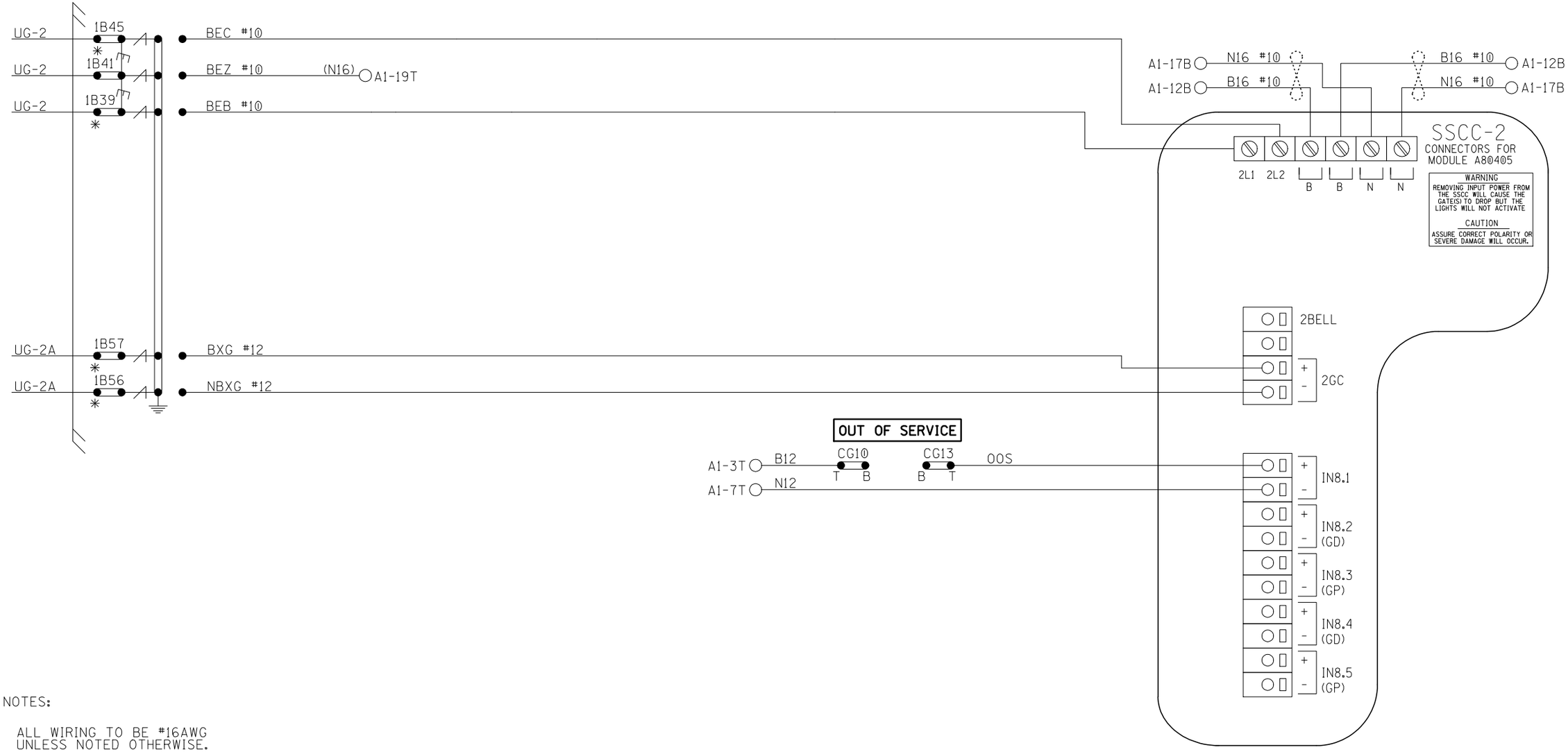

NOTES:

ALL WIRING TO BE #16AWG
UNLESS NOTED OTHERWISE.

* = TEST LINKS MUST BE OPENED TEMPORARILY FOR NEW COLD START OF NEW OR REPLACEMENT SSCC MODULE AND CAN ONLY BE CLOSED IN SEQUENCE WITH MFR. INSTRUCTIONS: SECTION 8 OF THE GCP 4000 REFERENCE MANUAL.

= TWIST

SSCC#2 MODULE HOOK-UP

DESIGNED BY: TMW 08-23-16	NORFOLK SOUTHERN		
DRAWN BY: PRS 08-23-16	OFFICE OF ASS'T. VICE PRESIDENT COMM. & SIGNAL, ATLANTA, GA.	M.P.:	SP-73.16
CHECKED BY: JMW 10-10-16	BLUFFTON, OH FLGS AT CR-15 (COUNTY LINE ROAD)		
IN SERVICE: - -	LIMA DISTRICT	FILE No.	R-
	CADD or DWG. No. LMPS07316.13	SHEET No.	13 of 22

REVISION INITIALS											

PROPERTY
NORFOLK SOUTHERN RAILWAY CO.

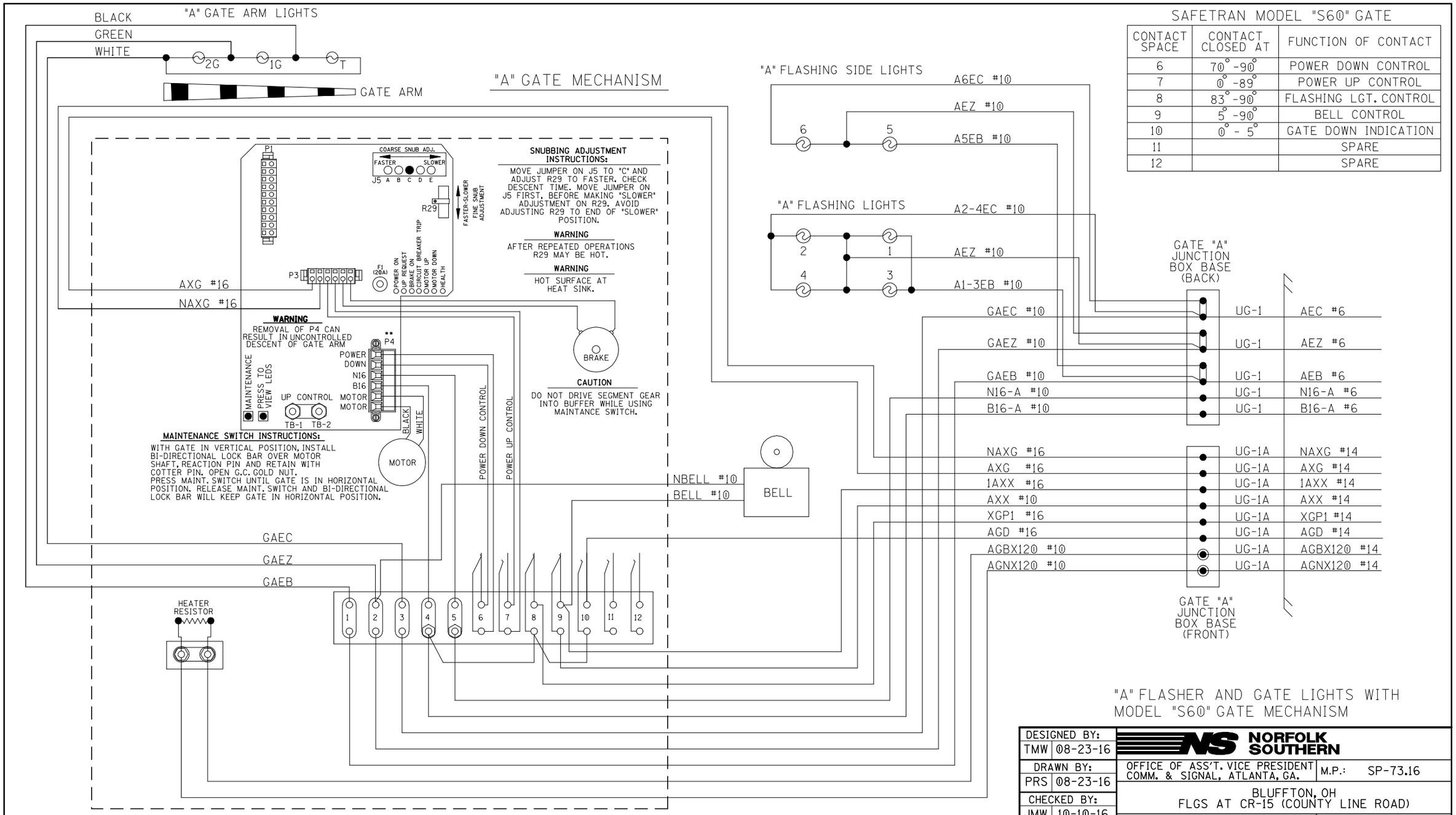

SAFETRAN MODEL "S60" GATE

CONTACT SPACE	CONTACT CLOSED AT	FUNCTION OF CONTACT
6	70° -90°	POWER DOWN CONTROL
7	0° -89°	POWER UP CONTROL
8	83° -90°	FLASHING LGT. CONTROL
9	5° -90°	BELL CONTROL
10	0° - 5°	GATE DOWN INDICATION
11		SPARE
12		SPARE

"A" FLASHER AND GATE LIGHTS WITH MODEL "S60" GATE MECHANISM

DESIGNED BY: TMW 08-23-16	NORFOLK SOUTHERN		
DRAWN BY: PRS 08-23-16	OFFICE OF ASS'T. VICE PRESIDENT COMM. & SIGNAL, ATLANTA, GA.	M.P.: SP-73.16	
CHECKED BY: JMW 10-10-16	BLUFFTON, OH FLGS AT CR-15 (COUNTY LINE ROAD)		
IN SERVICE: - -	LIMA DISTRICT	FILE No. R-	
	CADD or DWG. No. LMPS07316.14	SHEET No. 14 of 22	

REVISION INITIALS

PROPERTY
NORFOLK SOUTHERN RAILWAY CO.

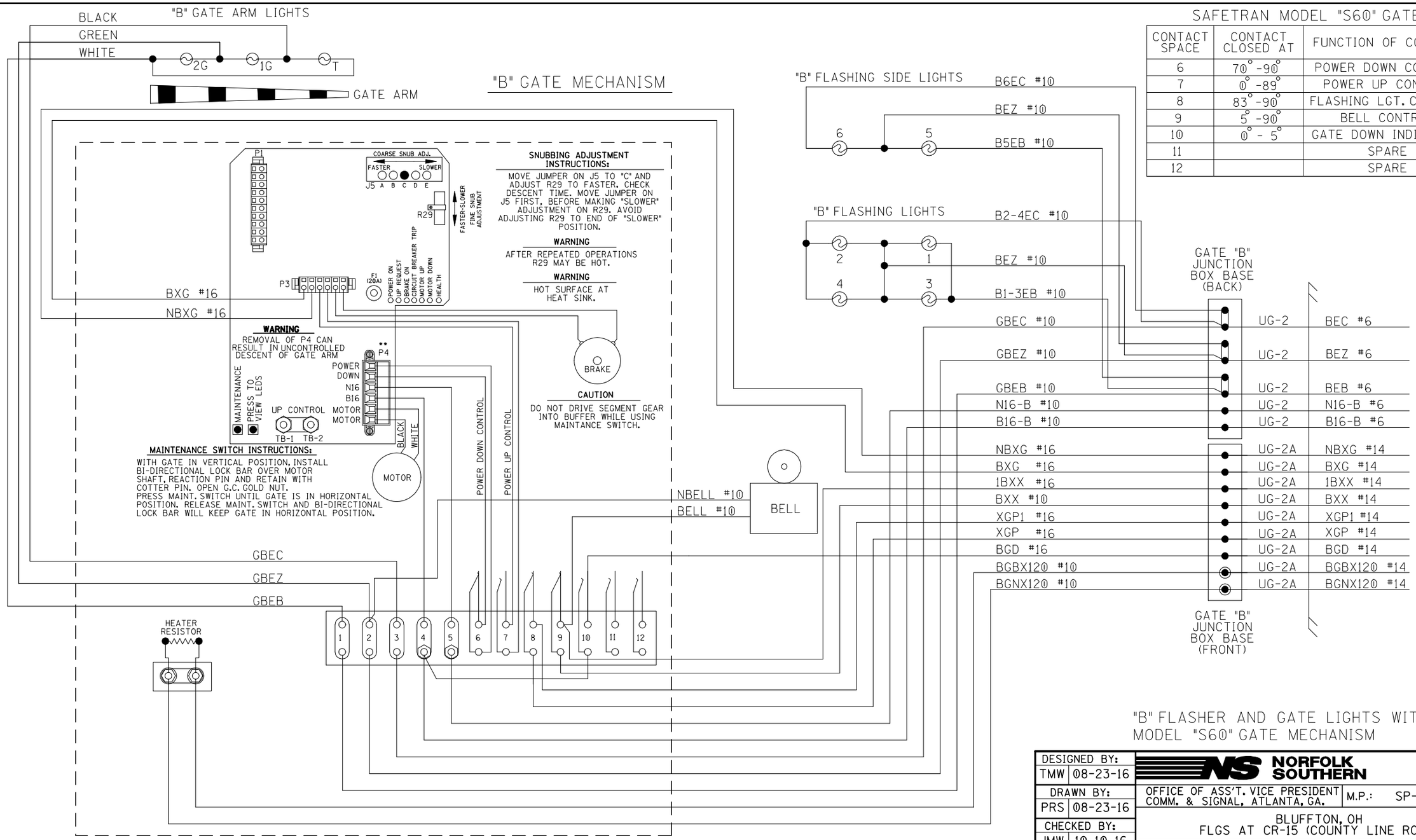

SAFETRAN MODEL "S60" GATE

CONTACT SPACE	CONTACT CLOSED AT	FUNCTION OF CONTACT
6	70° -90°	POWER DOWN CONTROL
7	0° -89°	POWER UP CONTROL
8	83° -90°	FLASHING LGT. CONTROL
9	5° -90°	BELL CONTROL
10	0° - 5°	GATE DOWN INDICATION
11		SPARE
12		SPARE

"B" FLASHER AND GATE LIGHTS WITH MODEL "S60" GATE MECHANISM

DESIGNED BY: TMW 08-23-16	NORFOLK SOUTHERN		
DRAWN BY: PRS 08-23-16	OFFICE OF ASS'T. VICE PRESIDENT COMM. & SIGNAL, ATLANTA, GA.	M.P.: SP-73.16	
CHECKED BY: JMW 10-10-16	BLUFFTON, OH FLGS AT CR-15 (COUNTY LINE ROAD)		
IN SERVICE: - -	LIMA DISTRICT	FILE No. R-	
	CADD or DWG. No. LMPS07316.15	SHEET No. 15 of 22	

REVISION INITIALS

PROPERTY
NORFOLK SOUTHERN RAILWAY CO.

LEFT TWO ROWS TERMINAL BOARD 1

"1A" "1B"

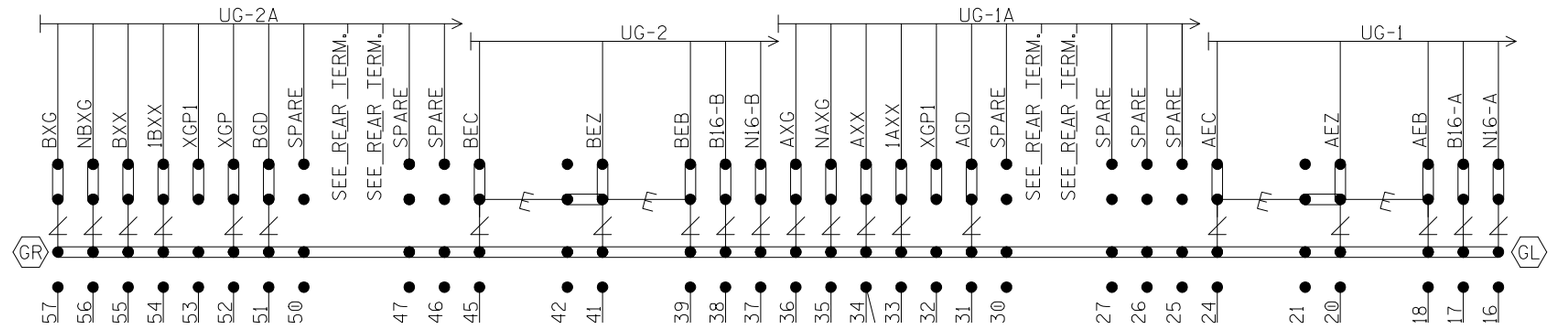

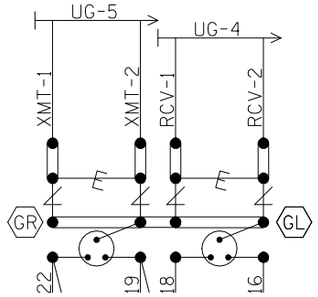

NOTE: INSTALL TEST LINKS ON ALL TRACK WIRES AND ON ALL LOW VOLTAGE UNDERGROUND CABLE TERMINATIONS.

= Heavy Duty Equalizer (022700-1X)

= Clearview Lightning Arrester (022585-1X)

= LPC-10560-51

SEE FARADAY SHIELD DETAILS - 1A & 1B FOR HOW THIS PORTION OF THE FARADAY SHIELD IS PREDRILLED. ONLY INSTALL AND USE THE TERMINALS NEEDED.

GR / GL = TERMINALS GROUNDED TO SHIELD. 4 POST BLOCKS USE EITHER - GR - SERRMI PART NO. 61278 GL - SERRMI PART NO. 61278-1.

BACKBOARD 1A & 1B

DESIGNED BY: TMW 08-23-16	NORFOLK SOUTHERN		
DRAWN BY: PRS 08-23-16	OFFICE OF ASS'T. VICE PRESIDENT COMM. & SIGNAL, ATLANTA, GA.	M.P.:	SP-73.16
CHECKED BY: JMW 10-10-16	BLUFFTON, OH FLGS AT CR-15 (COUNTY LINE ROAD)		
IN SERVICE: - -	LIMA DISTRICT	FILE No.	R-
	CADD or DWG. No. LMPS07316.16	SHEET No.	16 of 22

REVISION INITIALS										

PROPERTY
NORFOLK SOUTHERN RAILWAY CO.

REAR VIEW OF LEFT TWO ROWS TERMINAL BOARD 1

"1A"

"1B"

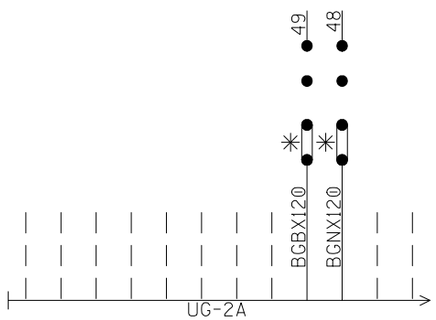

(SEE PREVIOUS SHEET FOR OTHER WIRES IN CABLE)

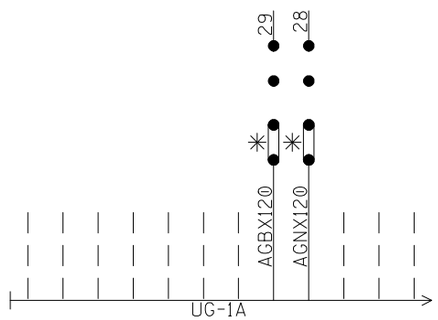

(SEE PREVIOUS SHEET FOR OTHER WIRES IN CABLE)

NOTE: ALL 120VAC AND ABOVE WILL BE WIRED TO THE REAR OF FARADAY BACKBOARD. INSULATED NUTS MUST BE USED ON ALL TERMINALS.

✳ = CLOSED DURING WINTER MONTHS

REAR BACKBOARD 1A & 1B

DESIGNED BY: TMW 08-23-16	NORFOLK SOUTHERN		
DRAWN BY: PRS 08-23-16	OFFICE OF ASS'T. VICE PRESIDENT COMM. & SIGNAL, ATLANTA, GA.	M.P.:	SP-73.16
CHECKED BY: JMW 10-10-16	BLUFFTON, OH FLGS AT CR-15 (COUNTY LINE ROAD)		
IN SERVICE: - -	LIMA DISTRICT	FILE No.	R-
	CADD or DWG. No. LMPS07316.17	SHEET No.	17 of 22

REVISION INITIALS											

PROPERTY
NORFOLK SOUTHERN RAILWAY CO.

NOTE: IF THE FARADAY SHIELD WOULD EVER NEED TO BE DRILLED IN THE FIELD, PROPER PRECAUTIONS MUST BE TAKEN TO INSURE METAL SHAVINGS DO NOT GET INTO EXISTING TERMINALS/WIRES.

AREA BELOW IS SCALED WITH AS=.75

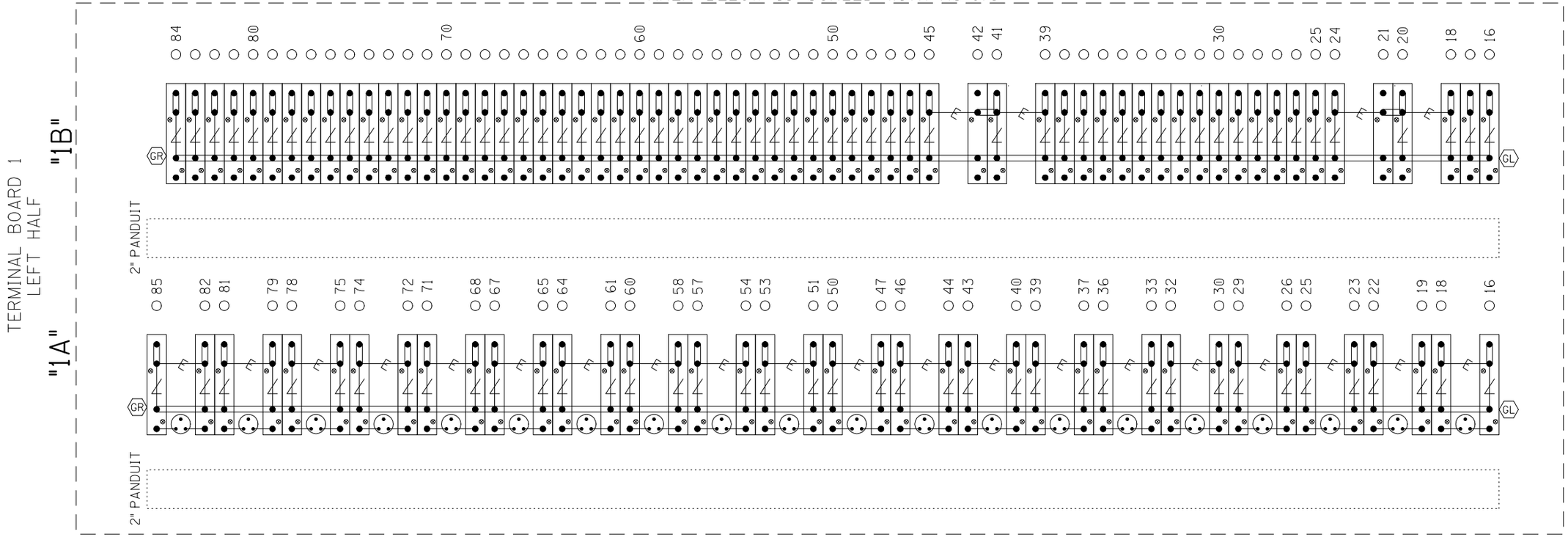

= Heavy Duty Equalizer (022700-1X)

Clearview = Lightning Arrester (022585-1X)

= LPC-10560-51

FARADAY SHIELD 1A & 1B

= INDICATES PLACEMENT OF PANDUIT

THIS SHEET IS FOR REFERENCE ONLY, TO REFLECT HOW THE FARADAY SHIELD IS PREDRILLED. ONLY INSTALL AND USE THE TERMINALS NEEDED.

GR / GL = TERMINALS GROUNDED TO SHIELD. 4 POST BLOCKS USE EITHER - GR - SERRMI PART NO. 61278 GL - SERRMI PART NO. 61278-1.

DESIGNED BY: TMW 08-23-16	NORFOLK SOUTHERN		
DRAWN BY: PRS 08-23-16	OFFICE OF ASS'T. VICE PRESIDENT COMM. & SIGNAL, ATLANTA, GA.	M.P.:	SP-73.16
CHECKED BY: JMW 10-10-16	BLUFFTON, OH FLGS AT CR-15 (COUNTY LINE ROAD)		
IN SERVICE: - -	LIMA DISTRICT	FILE No.	R-
	CADD or DWG. No. LMPS07316.18	SHEET No.	18 of 22

REVISION INITIALS										

PROPERTY
NORFOLK SOUTHERN RAILWAY CO.

NOTE: IF THE FARADAY SHIELD WOULD EVER NEED TO BE DRILLED IN THE FIELD, PROPER PRECAUTIONS MUST BE TAKEN TO INSURE METAL SHAVINGS DO NOT GET INTO EXISTING TERMINALS/WIRES.

AREA BELOW IS SCALED WITH AS=.75

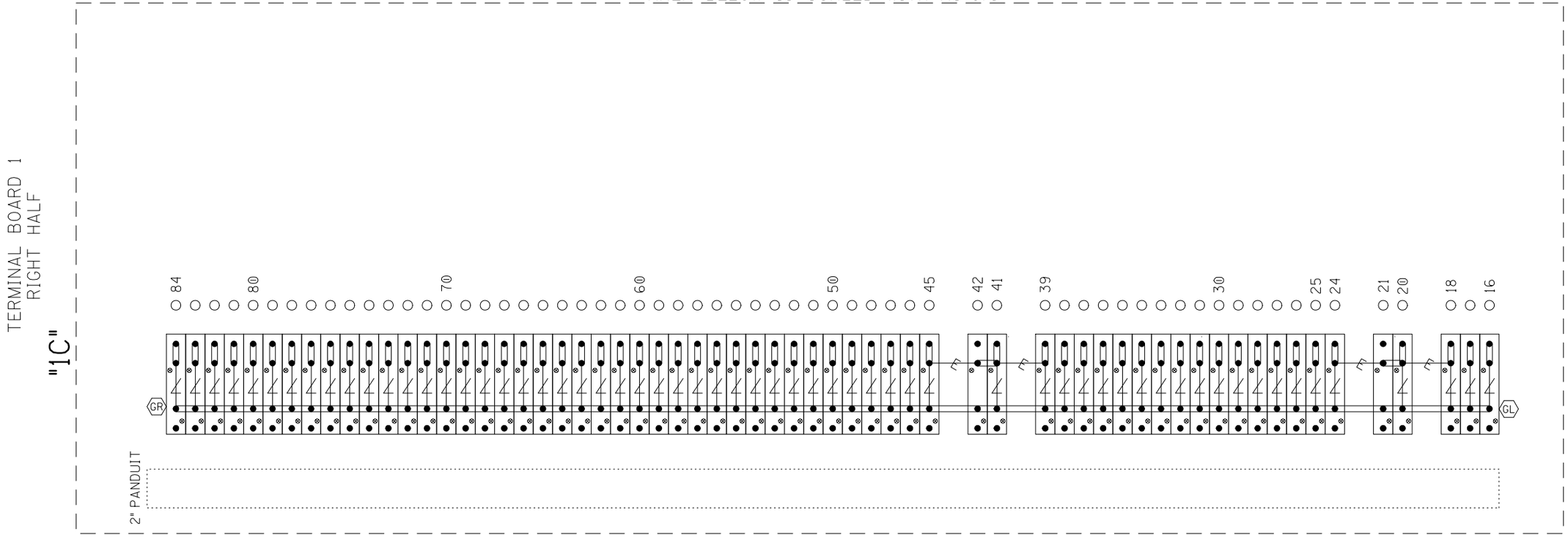

= Heavy Duty Equalizer (022700-1X)

= Clearview Lightning Arrester (022585-1X)

= LPC-10560-51

= INDICATES PLACEMENT OF PANDUIT

THIS SHEET IS FOR REFERENCE ONLY, TO REFLECT HOW THE FARADAY SHIELD IS PREDRILLED. ONLY INSTALL AND USE THE TERMINALS NEEDED.

GR / GL = TERMINALS GROUNDED TO SHIELD. 4 POST BLOCKS USE EITHER - GR - SERRMI PART NO. 61278 GL - SERRMI PART NO. 61278-1.

FARADAY SHIELD 1C

DESIGNED BY: TMW 08-23-16	NORFOLK SOUTHERN		
DRAWN BY: PRS 08-23-16	OFFICE OF ASS'T. VICE PRESIDENT COMM. & SIGNAL, ATLANTA, GA.	M.P.:	SP-73.16
CHECKED BY: JMW 10-10-16	BLUFFTON, OH FLGS AT CR-15 (COUNTY LINE ROAD)		
IN SERVICE: - -	LIMA DISTRICT	FILE No.	R-
	CADD or DWG. No. LMPS07316.19	SHEET No.	19 of 22

REVISION INITIALS										

PROPERTY
NORFOLK SOUTHERN RAILWAY CO.

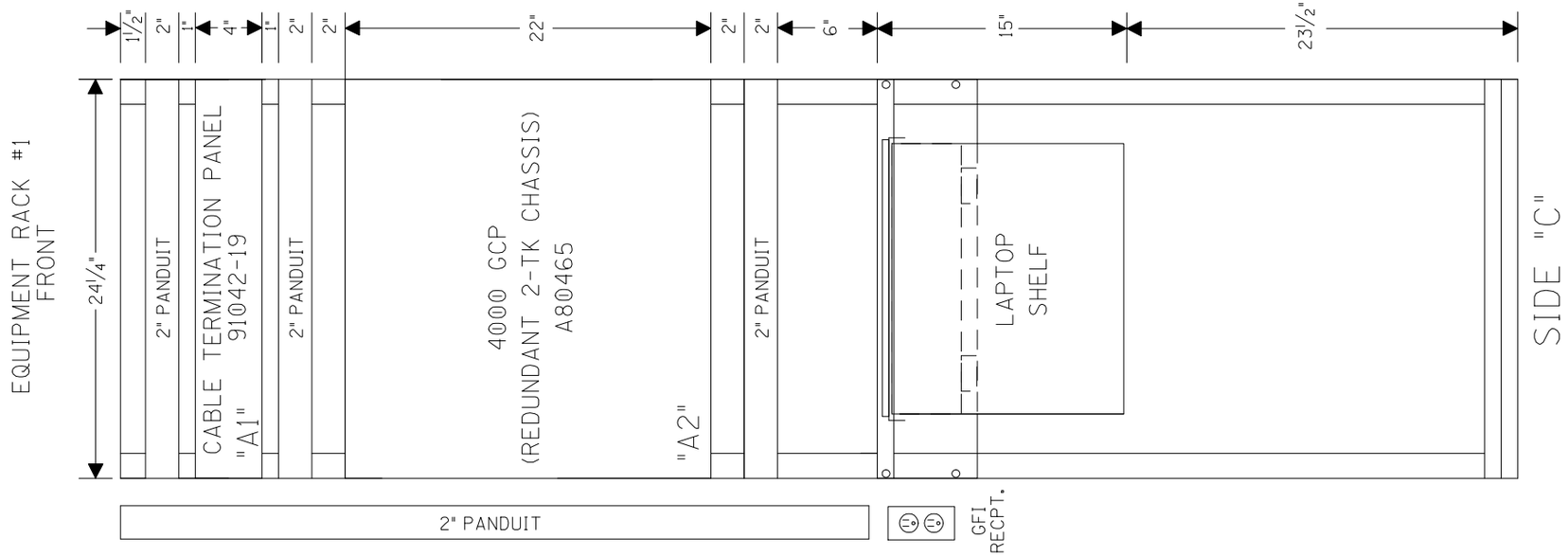

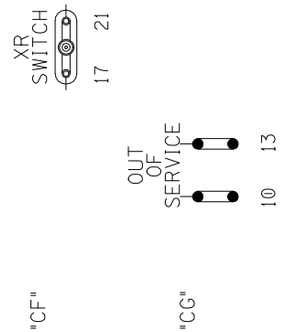

HOUSE SIDE C LAYOUT
& RACK PLACEMENT

DESIGNED BY: TMW 08-23-16	NORFOLK SOUTHERN		
DRAWN BY: PRS 08-23-16	OFFICE OF ASS'T. VICE PRESIDENT COMM. & SIGNAL, ATLANTA, GA.	M.P.:	SP-73.16
CHECKED BY: JMW 10-10-16	BLUFFTON, OH FLGS AT CR-15 (COUNTY LINE ROAD)		
IN SERVICE: - -	LIMA DISTRICT	FILE No.	R-
	CADD or DWG. No. LMPS07316.20	SHEET No.	20 of 22

REVISION INITIALS										

PROPERTY
NORFOLK SOUTHERN RAILWAY CO.

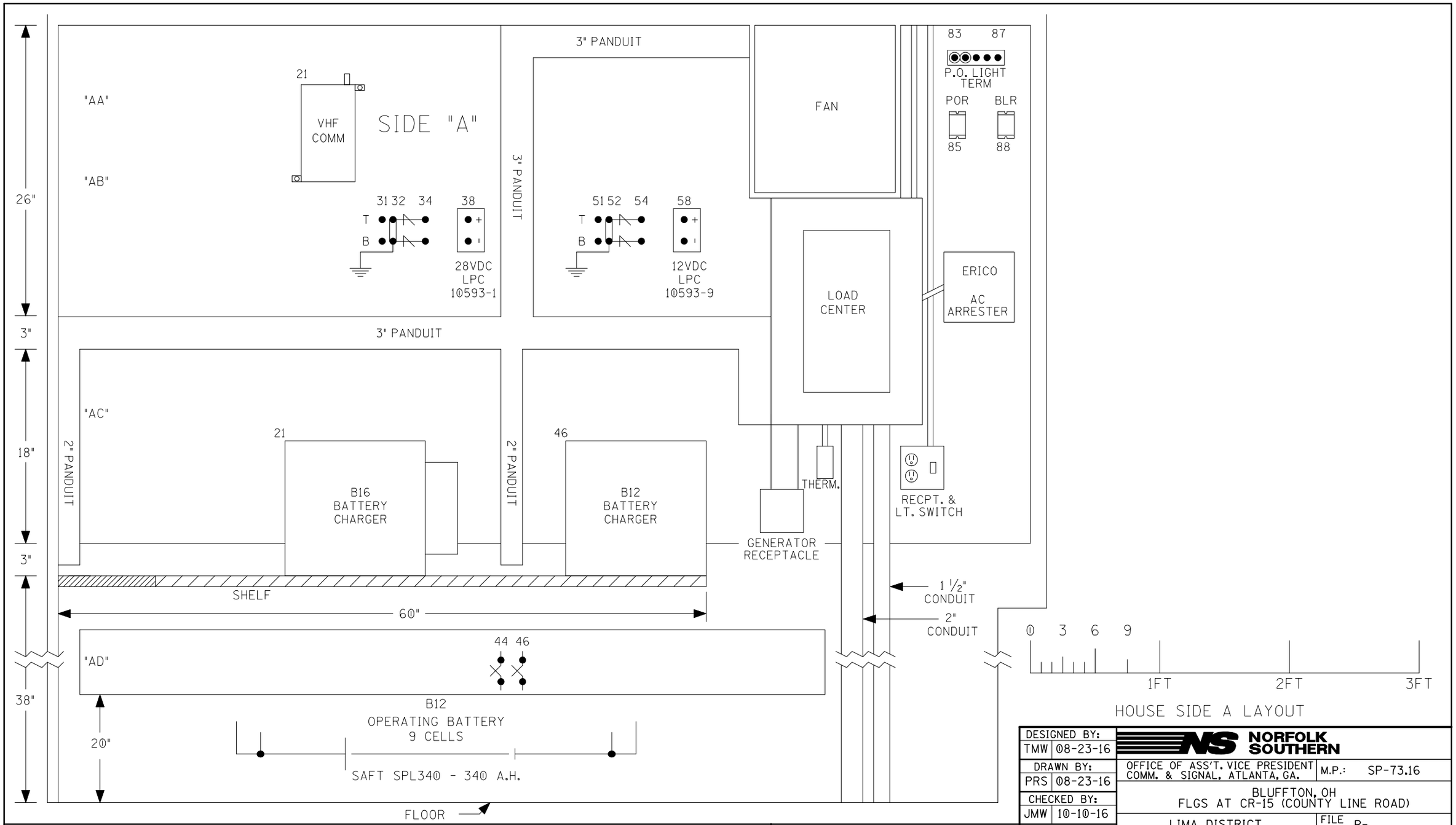

HOUSE SIDE A LAYOUT

DESIGNED BY: TMW 08-23-16	NORFOLK SOUTHERN		
DRAWN BY: PRS 08-23-16	OFFICE OF ASS'T. VICE PRESIDENT COMM. & SIGNAL, ATLANTA, GA.	M.P.: SP-73.16	
CHECKED BY: JMW 10-10-16	BLUFFTON, OH FLGS AT CR-15 (COUNTY LINE ROAD)		
IN SERVICE: - -	LIMA DISTRICT	FILE No. R-	
	CADD or DWG. No. LMPS07316.21	SHEET No. 21 of 22	

REVISION INITIALS										

PROPERTY
NORFOLK SOUTHERN RAILWAY CO.

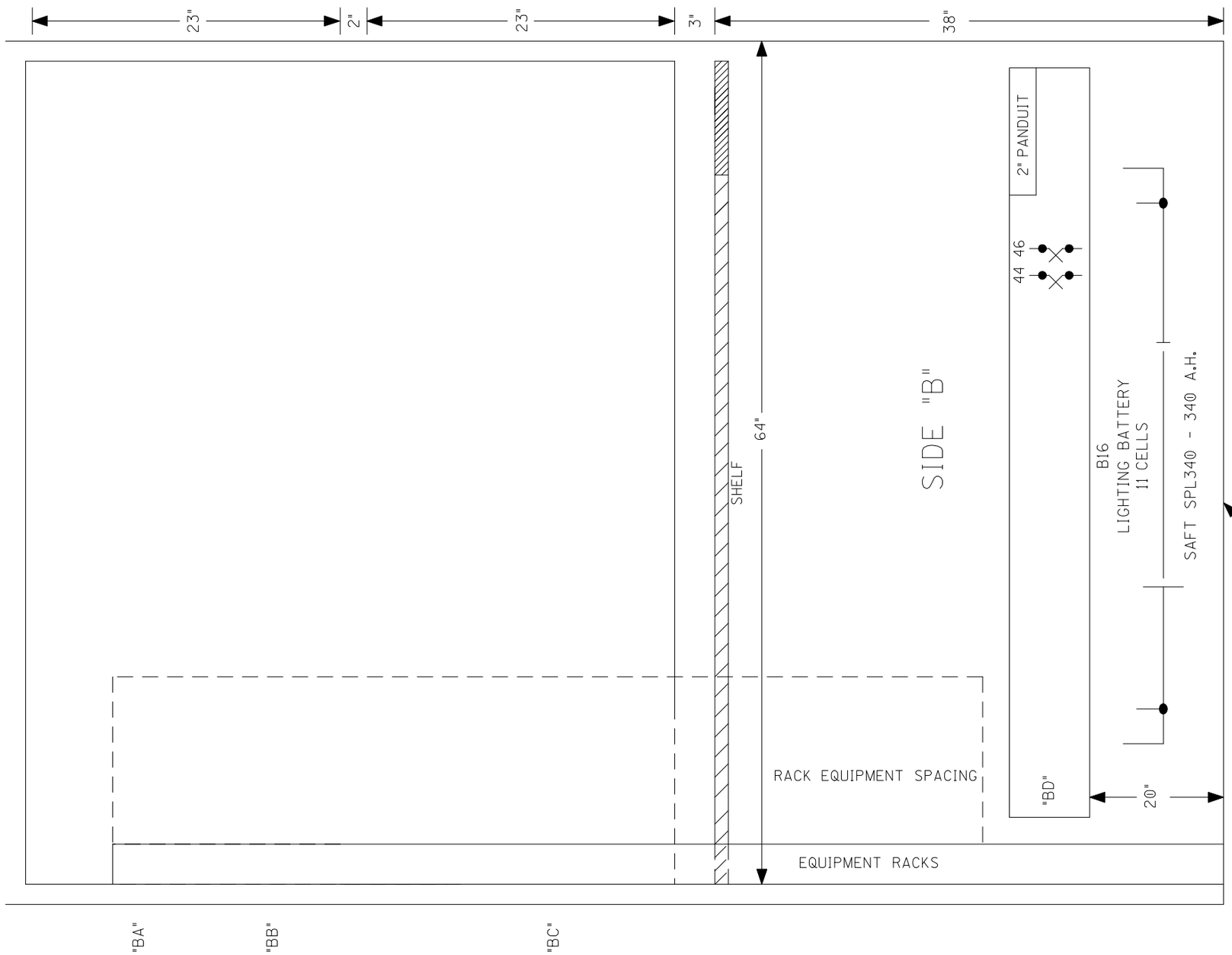

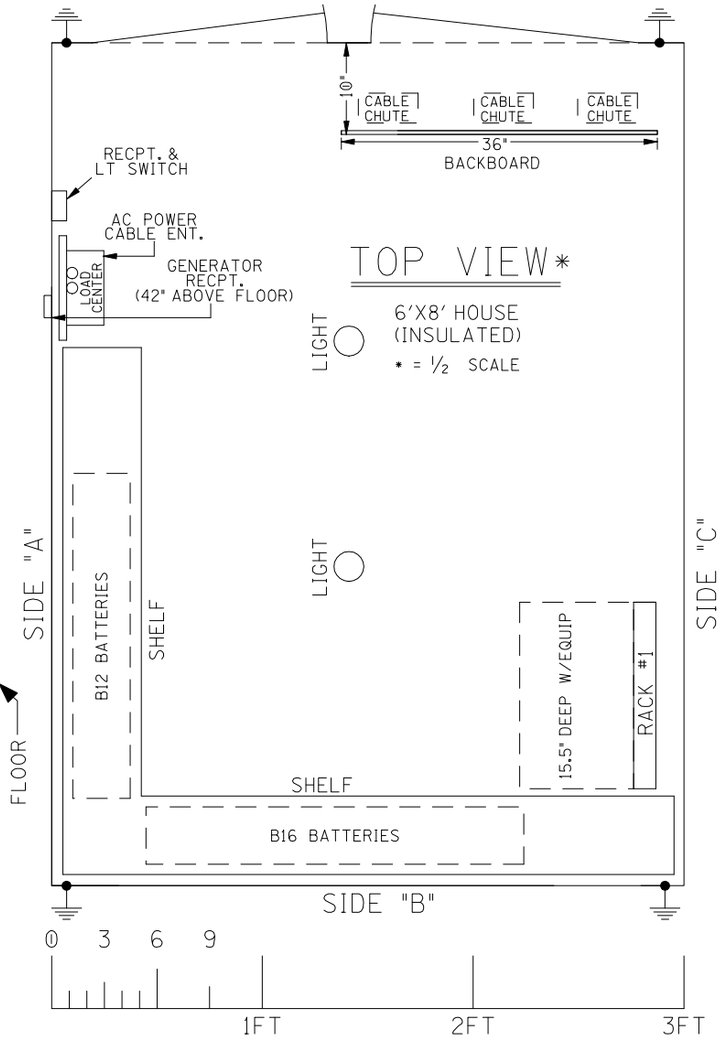

HOUSE SIDE B LAYOUT & TOP VIEW

DESIGNED BY: TMW 08-23-16	NORFOLK SOUTHERN	
DRAWN BY: PRS 08-23-16	OFFICE OF ASS'T. VICE PRESIDENT COMM. & SIGNAL, ATLANTA, GA.	M.P.: SP-73.16
CHECKED BY: JMW 10-10-16	BLUFFTON, OH FLGS AT CR-15 (COUNTY LINE ROAD)	
IN SERVICE: - -	LIMA DISTRICT	FILE No. R-
	CADD or DWG. No. LMPS07316.22	SHEET No. 22 of 22

REVISION INITIALS										

PROPERTY
NORFOLK SOUTHERN RAILWAY CO.

SH. NO.	CONTENTS
NX1	INDEX SHEET
1	LAYOUT
2	PROFILE
3	CABLE
4	TRACK CIRCUITS
5	4000 MS CHASSIS AND MODULE LAYOUT
6	4000 MS MODULE HOOK-UP
7	LINE CIRCUITS
8	STICK CIRCUITS
9	XR
10	EOR - FLASHERS
11	POR - POWER
12	CASE LAYOUT

NEW SHEET
RED = IN

IN SERVICE_____ _____
SIGNED DATE

☐ S&E ENGINEERING COPY
☐ CONSTRUCTION OFFICE COPY
RETURN TO S&E ENG. AFTER COMPLETION
☐ FIELD COPY
RETURN TO CASE AFTER COMPLETION
☐ PROJECT ENGINEER COPY

INDEX SHEET

DESIGNED BY: TMW 08-23-16	NORFOLK SOUTHERN	
DRAWN BY: PRS 08-23-16	OFFICE OF ASS'T. VICE PRESIDENT COMM. & SIGNAL, ATLANTA, GA.	M.P.: SP-73.50
CHECKED BY: JMW 10-10-16	BLUFFTON, OH FLS AT JEFFERSON STREET	
IN SERVICE: - -	LIMA DISTRICT	FILE No. R-
	CADD or DWG. No. LMPS07350.NX1	SHEET No. 1 of 1

REVISION INITIALS											

PROPERTY
NORFOLK SOUTHERN RAILWAY CO.

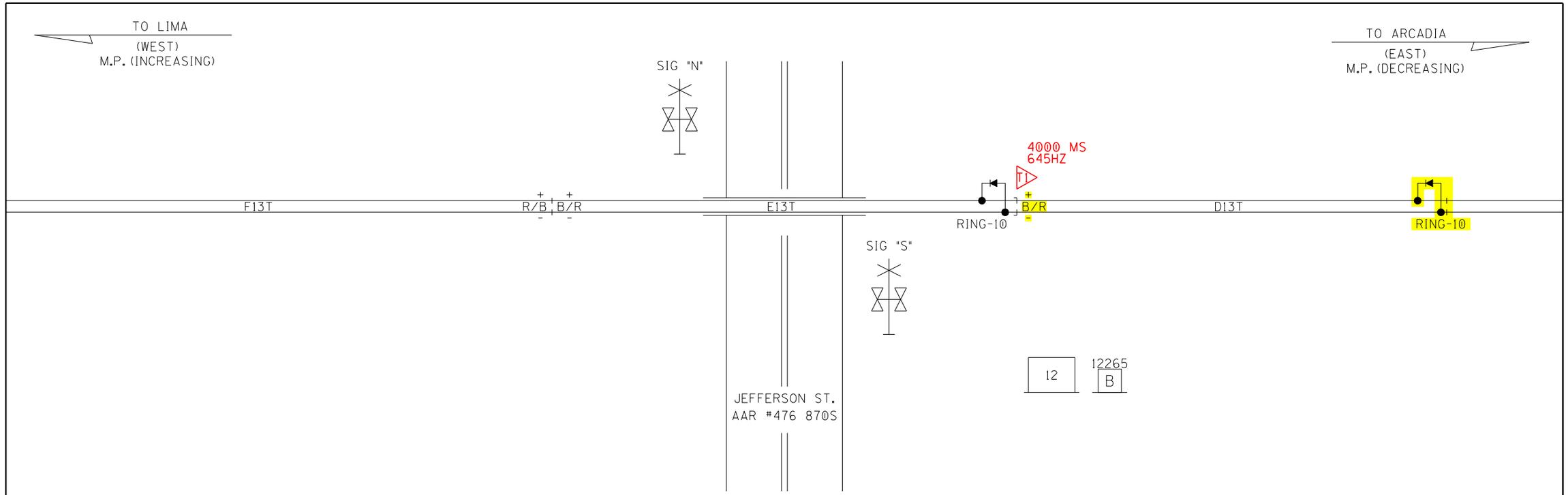

NOTES:

1. MAX. TRAIN SPEED 25 M.P.H.

#10.2205
08-23-16
PRS
RED = IN
YELLOW = OUT

LAYOUT

NO SCALE

DESIGNED BY: RJJ 12-16-92	NORFOLK SOUTHERN		
DRAWN BY: SWS 07-06-96	OFFICE OF ASS'T. VICE PRESIDENT COMM. & SIGNAL, ATLANTA, GA.	M.P.: SP-73.50	
CHECKED BY: - -	BLUFFTON, OHIO FLS at JEFFERSON STREET		
IN SERVICE: - -52	LIMA DISTRICT	FILE No. R-	
	CADD or DWG. No. LMPS07350.01	SHEET No. 1 of 10 12	

REVISION INITIALS											

PROPERTY
NORFOLK SOUTHERN RAILWAY CO.

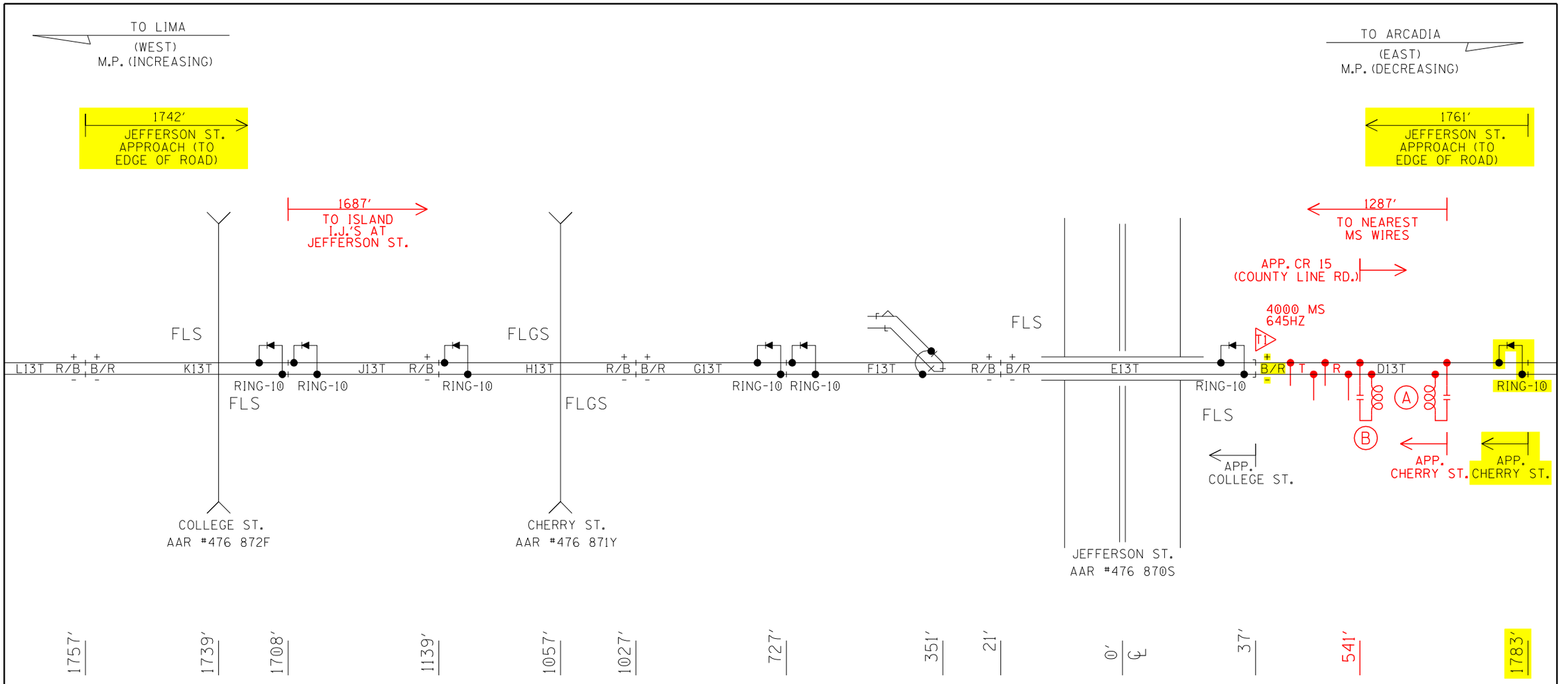

#10.2205
08-23-16
PRS
RED = IN
YELLOW = OUT

Ⓐ– MF-NBS 62775-3497 (645HZ)

Ⓑ– MF-NBS 62775-3497 (970HZ)

PROFILE

DESIGNED BY: RJJ 12-16-92	NORFOLK SOUTHERN		
DRAWN BY: SWS 07-06-96	OFFICE OF ASS'T. VICE PRESIDENT COMM. & SIGNAL, ATLANTA, GA.	M.P.: SP-73.50	
CHECKED BY: - -	BLUFFTON, OHIO FLS at JEFFERSON STREET		
IN SERVICE: - -52	LIMA DISTRICT	FILE No. R-	
	CADD or DWG. No. LMPS07350.02	SHEET No. 2 of 10 12	

REVISION INITIALS	02-25-97 EGC								

PROPERTY
NORFOLK SOUTHERN RAILWAY CO.

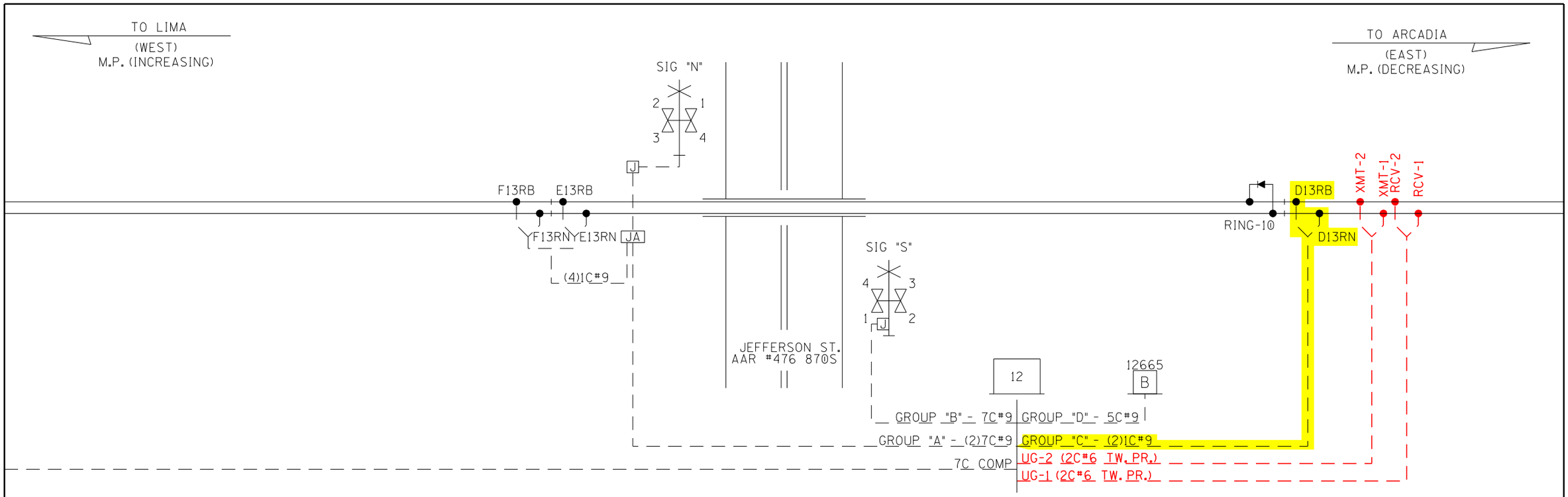

GROUP "A" - (2) 7CUG#9

E1N
NE1N
E2N
NE2N
E3N
NE3N
E4N
NE4N
E13RB
E13RN
F13RB
F13RN
SPARE
SPARE

GROUP "B" - 7CUG#9

E1S
NE1S
E2S
NE2S
SPARE
SPARE
SPARE

GROUP "C" - (2)1C#9

D13RB
D13RN

GROUP "D" - 5CUG#9

B
B
N
N
SPARE

7C COMP

BX110
CX110
735EX
N735EX
737WX
N737WX
EFG13TP

UG-1-TW. PR. #6

RCV-1
RCV-2

UG-2-TW. PR. #6

XMT-1
XMT-2

#10.2205
08-23-16
PRS
RED = IN
YELLOW = OUT

CABLE

DESIGNED BY: RJJ 12-16-92	NORFOLK SOUTHERN
DRAWN BY: SWS 07-06-96	OFFICE OF ASS'T. VICE PRESIDENT COMM. & SIGNAL, ATLANTA, GA. — M.P.: SP-73.50
CHECKED BY: - -	BLUFFTON, OHIO FLS at JEFFERSON STREET
IN SERVICE: - -52	LIMA DISTRICT — FILE No. R-
	CADD or DWG. No. LMPS07350.03 — SHEET No. 3 of 10 12

REVISION INITIALS

PROPERTY
NORFOLK SOUTHERN RAILWAY CO.

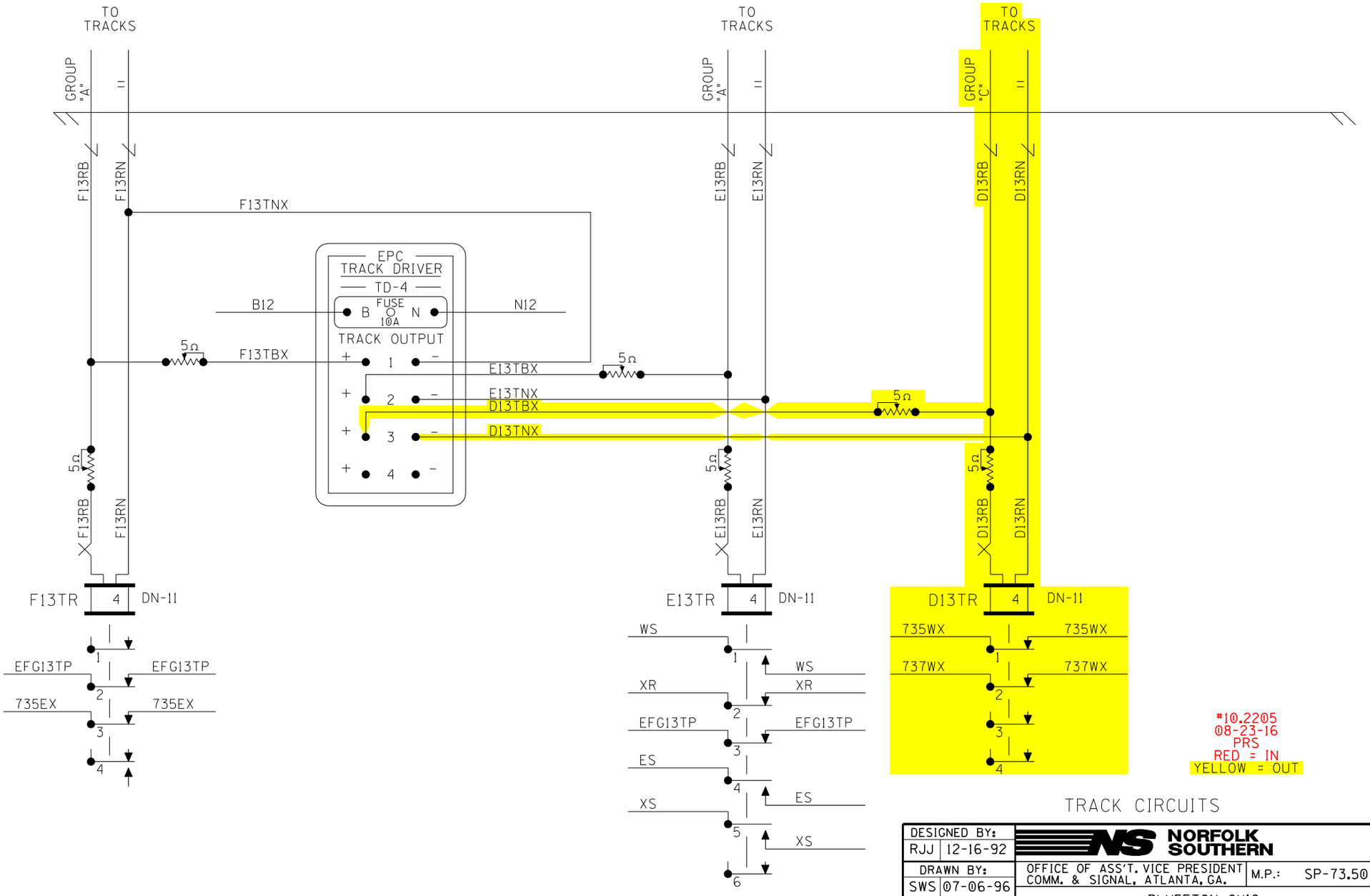

#10.2205
08-23-16
PRS
RED = IN
YELLOW = OUT

TRACK CIRCUITS

DESIGNED BY: RJJ 12-16-92	NORFOLK SOUTHERN		
DRAWN BY: SWS 07-06-96	OFFICE OF ASS'T. VICE PRESIDENT COMM. & SIGNAL, ATLANTA, GA.	M.P.: SP-73.50	
CHECKED BY: - -	BLUFFTON, OHIO FLS at JEFFERSON STREET		
IN SERVICE: - -52	LIMA DISTRICT	FILE No. R-	
	CADD or DWG. No. LMPS07350.04	SHEET No. 4 of 10 12	

REVISION INITIALS	02-25-97 EGC

PROPERTY
NORFOLK SOUTHERN RAILWAY CO.

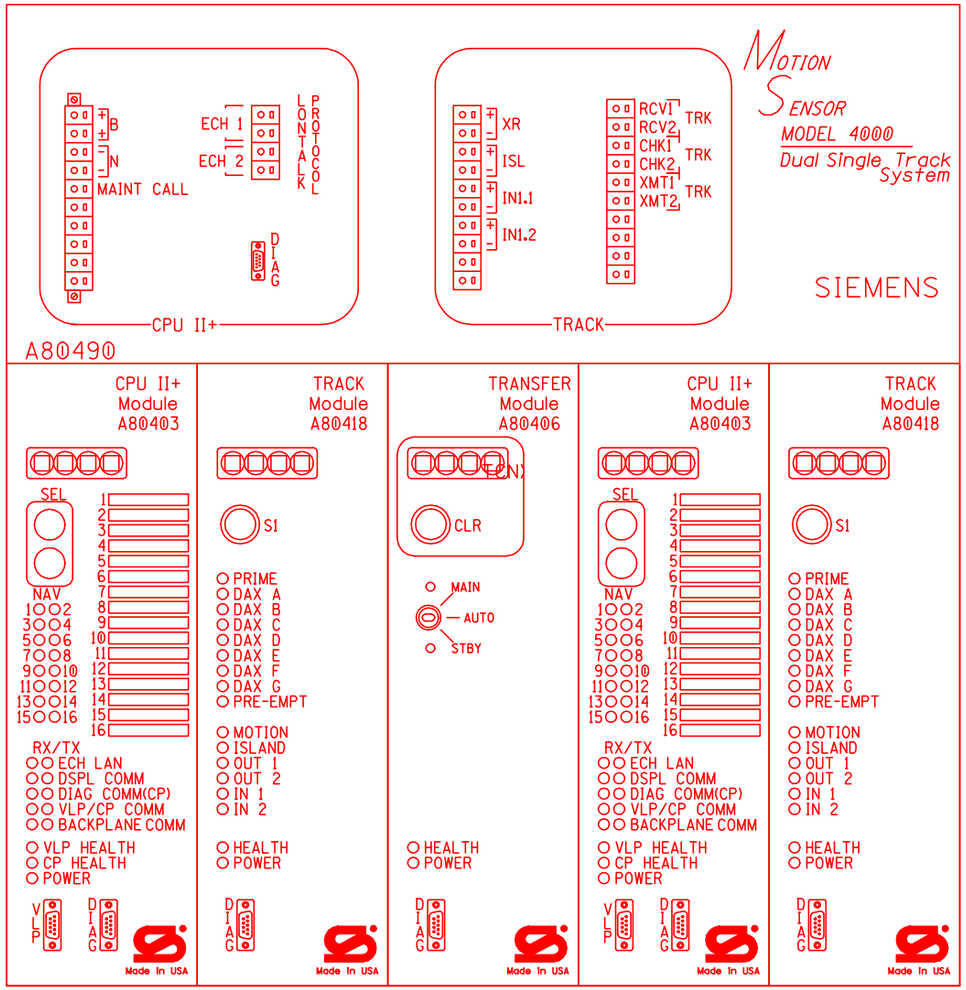

Program Report

Location and SIN

DOT Number: 476870S
Milepost Number: SP-73.50
Site Name: JEFFERSON STREET

SIN: 762010010016

MCF and Template Selection

MCF Name: GCP-T6X-02-6.mcf
MCF Revision: 26
MCFCRC: 494D2656

Template = 6:Motion Sensor (OCCN)

Check Numbers

Office Check Number: 35A36DF2
Config. Check Number: 220FBEF6
(Based on MCF Revision 26)

Program

MS4000 configuration
Track 1: GCP Frequency = 645 Hz (OCCN TCN)
Track 1: GCP Transmit Level = Medium (Field TCN)
Track 1: Uni/Bi/Sim-Bidirnl = Unidirnl (OCCN TCN)
Track 1: Directionally Wired = No (OCCN)
Track 1: Prime Pickup Delay = 15 sec (OCCN)
Track 1: Prime UAX = Not Used (OCCN)
Track 1: Island Used = No (OCCN)
IN 1.1 = Out Of Service IP 1 (OCCN)
IN 1.2 = Not Used (OCCN)

MS4000 Predictor
Track 1: Prime MS/GCP Mode = MS (OCCN)

MS4000 Advanced
Track 1: Positive Start = Off (OCCN)
Track 1: Sudden Shnt Det Used = No (OCCN)
Track 1: Low EZ Detection Used = No (OCCN)
Track 1: MS Sensitivity Level = 36 (Field)
Track 1: Compensation Level = 1300 (Field TCN)
Track 1: Low EX Adjustment = 39 (Field)
Track 1: Inbound PS Sensitivity = Off (Field)
Track 1: Speed Limiting Used = Yes (Field)
Track 1: Outbound False Act Lvl = Normal (Field)

MS4000 Other
OOS Timeout = 1 hrs (Field)
Daylight Savings = On (Field)
EZ/EX Logging = Change (Field)
EZ/EX Point Change = 3 (Field)

ADVANCED: out of service 2
T1 OOS Control = OOS Input 1 (OCCN)

Express: MS4000 configuration
Track 1: GCP Frequency = 645 Hz (OCCN TCN)
Track 1: GCP Transmit Level = Medium (Field TCN)
Track 1: Uni/Bi/Sim-Bidirnl = Unidirnl (OCCN TCN)
Track 1: Directionally Wired = No (OCCN)
Track 1: Prime Pickup Delay = 15 sec (OCCN)
Track 1: Prime UAX = Not Used (OCCN)
Track 1: Island Used = No (OCCN)
IN 1.1 = Out Of Service IP 1 (OCCN)
IN 1.2 = Not Used (OCCN)

Express: MS4000 Predictor
Track 1: Prime MS/GCP Mode = MS (OCCN)

Express: MS4000 Advanced
Track 1: Positive Start = Off (OCCN)
Track 1: Sudden Shnt Det Used = No (OCCN)
Track 1: Low EZ Detection Used = No (OCCN)
Track 1: MS Sensitivity Level = 36 (Field)
Track 1: Compensation Level = 1300 (Field TCN)
Track 1: Low EX Adjustment = 39 (Field)
Track 1: Inbound PS Sensitivity = Off (Field)
Track 1: Speed Limiting Used = Yes (Field)
Track 1: Outbound False Act Lvl = Normal (Field)

Express: MS4000 Other
OOS Timeout = 1 hrs (Field)
Daylight Savings = On (Field)
EZ/EX Logging = Change (Field)
EZ/EX Point Change = 3 (Field)

Configuration Package File

Filename: LMPS07350.pac
Date/Time: 10/17/2016 8:58:26
DT Version: 5.7.3

NEW SHEET
RED = IN

4000 MS CHASSIS AND MODULE LAYOUT

DESIGNED BY: TMW 08-23-16	NORFOLK SOUTHERN		
DRAWN BY: PRS 08-23-16	OFFICE OF ASS'T. VICE PRESIDENT COMM. & SIGNAL, ATLANTA, GA.	M.P.: SP-73.50	
CHECKED BY: JMW 10-10-16	BLUFFTON, OH FLS AT JEFFERSON STREET		
IN SERVICE: - -	LIMA DISTRICT	FILE No. R-	
	CADD or DWG. No. LMPS07350.05	SHEET No. 5 of 12	

REVISION INITIALS											

PROPERTY
NORFOLK SOUTHERN RAILWAY CO.

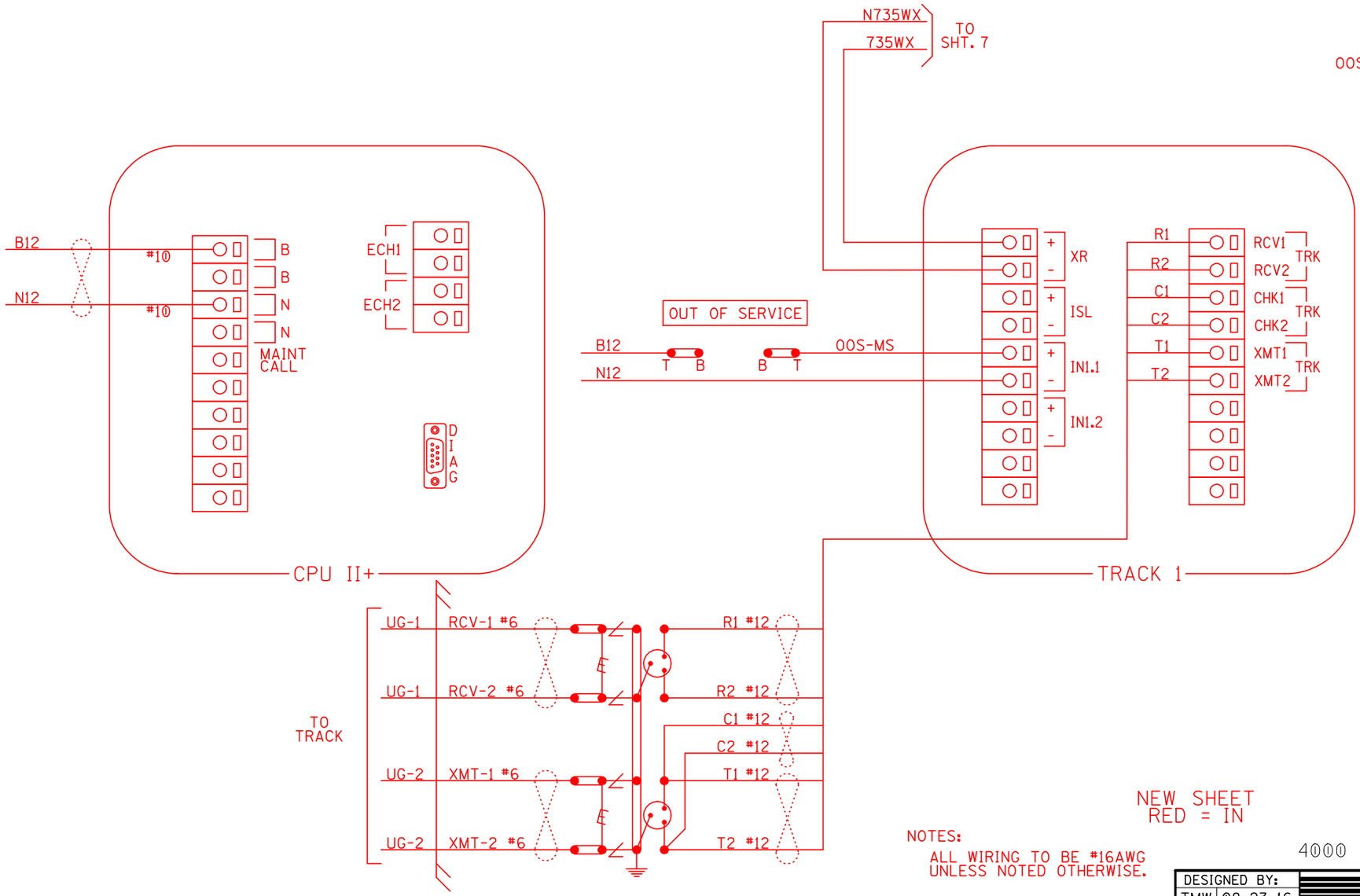

OOS NOTE:

WHEN PLACING THE 4000 MS TRACK OOS, ONLY THE EAST (D13T) IS REMOVED FROM SERVICE. ADDITIONAL STEPS ARE NEEDED TO TAKE THE ENTIRE CROSSING OOS.

NEW SHEET
RED = IN

NOTES:

ALL WIRING TO BE #16AWG UNLESS NOTED OTHERWISE.

=TWIST

4000 MS MODULE HOOK-UP

DESIGNED BY: TMW 08-23-16	NORFOLK SOUTHERN	
DRAWN BY: PRS 08-23-16	OFFICE OF ASS'T. VICE PRESIDENT COMM. & SIGNAL, ATLANTA, GA.	M.P.: SP-73.50
CHECKED BY: JMW 10-10-16	BLUFFTON, OH FLS AT JEFFERSON STREET	
IN SERVICE: - -	LIMA DISTRICT	FILE No. R-
	CADD or DWG. No. LMPS07350.06	SHEET No. 6 of 12

REVISION INITIALS										

PROPERTY
NORFOLK SOUTHERN RAILWAY CO.

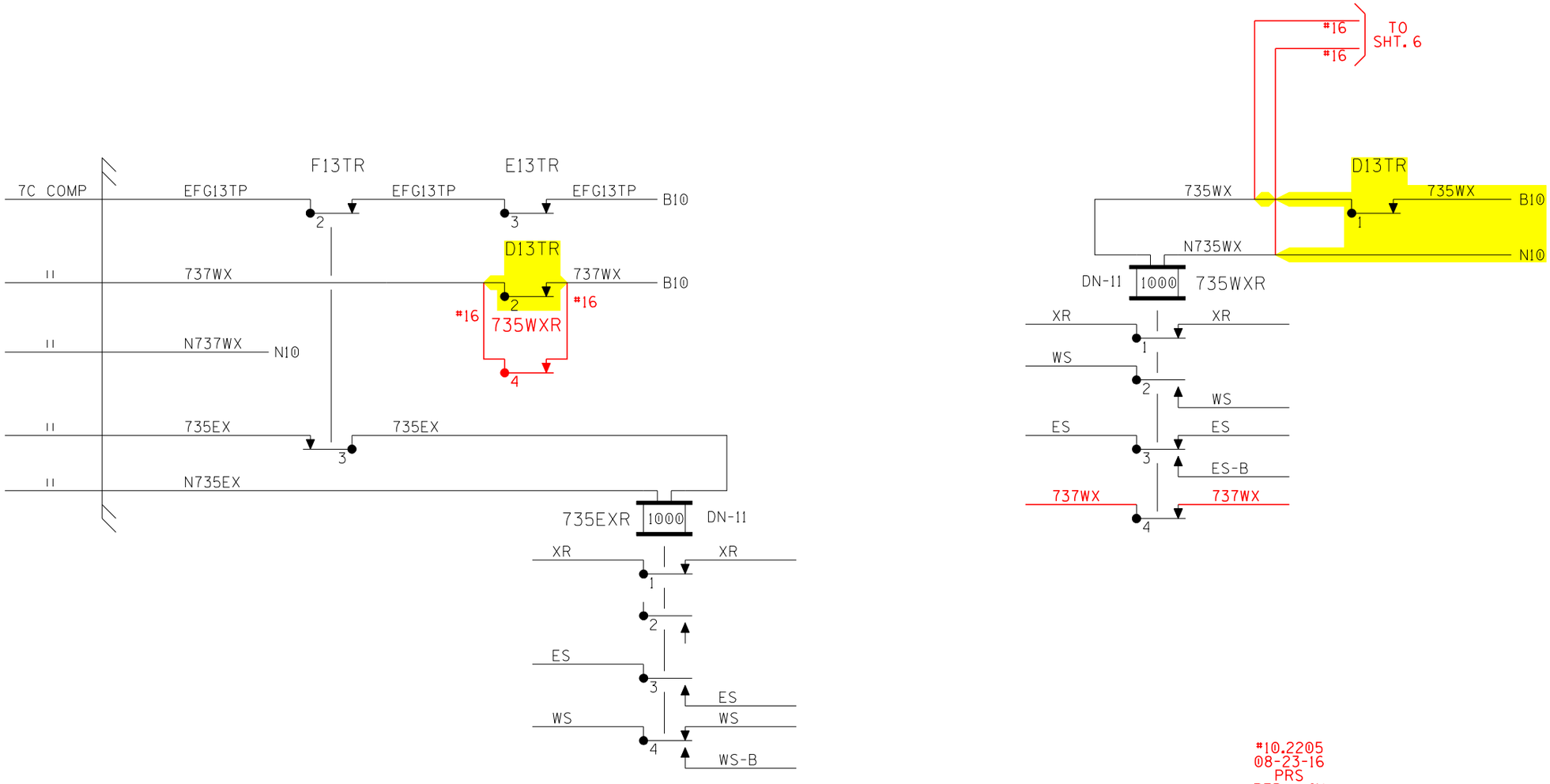

#10.2205
08-23-16
PRS
RED = IN
YELLOW = OUT

LINE CIRCUITS

DESIGNED BY: RJJ 12-16-92	NORFOLK SOUTHERN		
DRAWN BY: SWS 07-06-96	OFFICE OF ASS'T. VICE PRESIDENT COMM. & SIGNAL, ATLANTA, GA.	M.P.: SP-73.50	
CHECKED BY: - -	BLUFFTON, OHIO FLS at JEFFERSON STREET		
IN SERVICE: - -52	LIMA DISTRICT	FILE No. R-	
	CADD or DWG. No. LMPS07350.05 07	SHEET No. 5 7 of 10 12	

REVISION	02-25-97								
INITIALS	EGC								

PROPERTY
NORFOLK SOUTHERN RAILWAY CO.

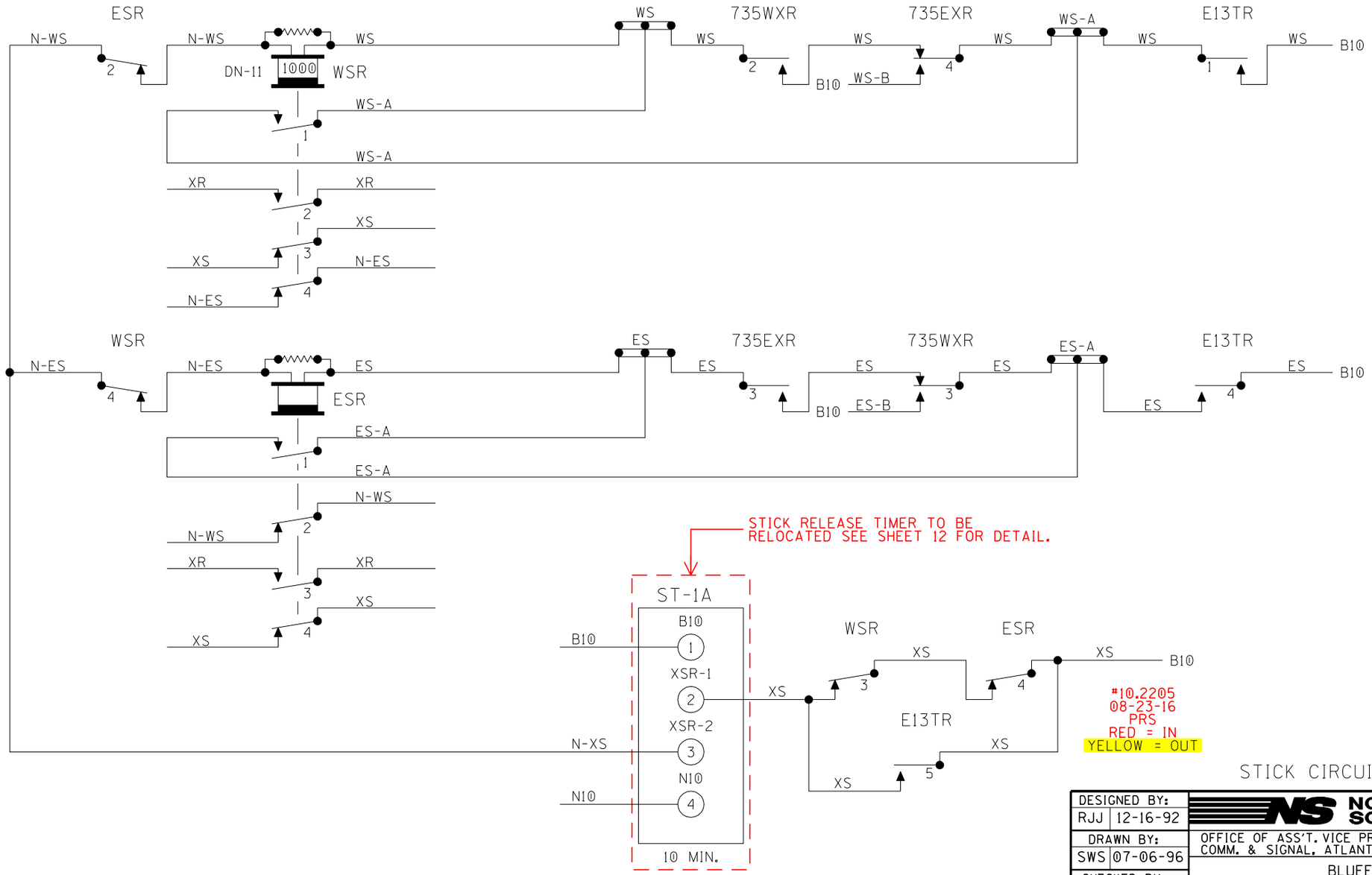

STICK CIRCUITS

DESIGNED BY: RJJ 12-16-92	NORFOLK SOUTHERN		
DRAWN BY: SWS 07-06-96	OFFICE OF ASS'T. VICE PRESIDENT COMM. & SIGNAL, ATLANTA, GA.	M.P.: SP-73.50	
CHECKED BY: - -	BLUFFTON, OHIO FLS at JEFFERSON STREET		
IN SERVICE: - -52	LIMA DISTRICT	FILE No. R-	
	CADD or DWG. No. LMPS07350.06 08	SHEET No. 6 8 of 10 12	

REVISION INITIALS	02-25-97 EGC								

PROPERTY
NORFOLK SOUTHERN RAILWAY CO.

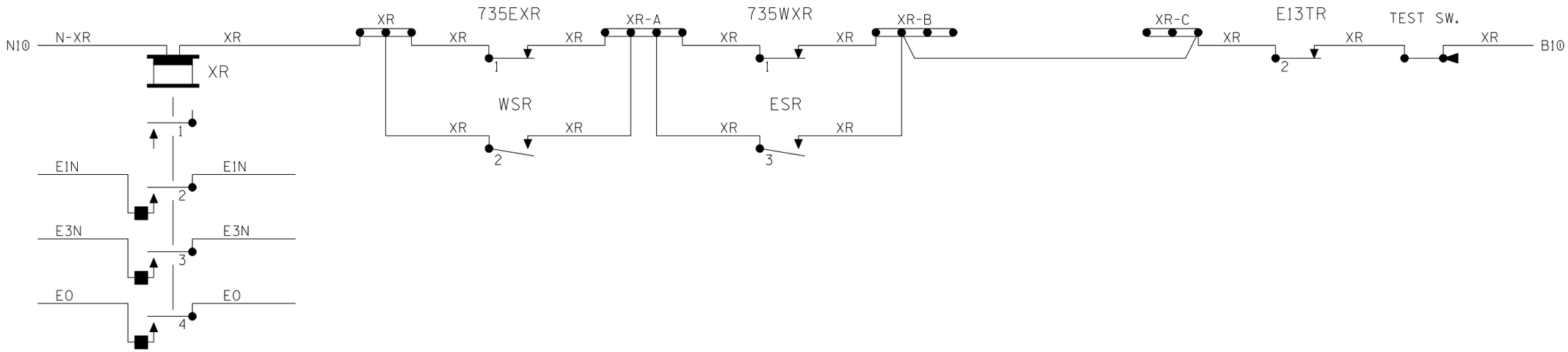

#10.2205
08-23-16
PRS
RED = IN
YELLOW = OUT

XR

DESIGNED BY: RJJ 12-16-92	NORFOLK SOUTHERN		
DRAWN BY: SWS 07-06-96	OFFICE OF ASS'T. VICE PRESIDENT COMM. & SIGNAL, ATLANTA, GA.	M.P.: SP-73.50	
CHECKED BY: - -	BLUFFTON, OHIO FLS at JEFFERSON STREET		
IN SERVICE: - -52	LIMA DISTRICT	FILE No. R-	
	CADD or DWG. No. LMPS07350.07 09	SHEET No. 7 9 of 10 12	

REVISION	02-25-97									
INITIALS	EGC									

PROPERTY
NORFOLK SOUTHERN RAILWAY CO.

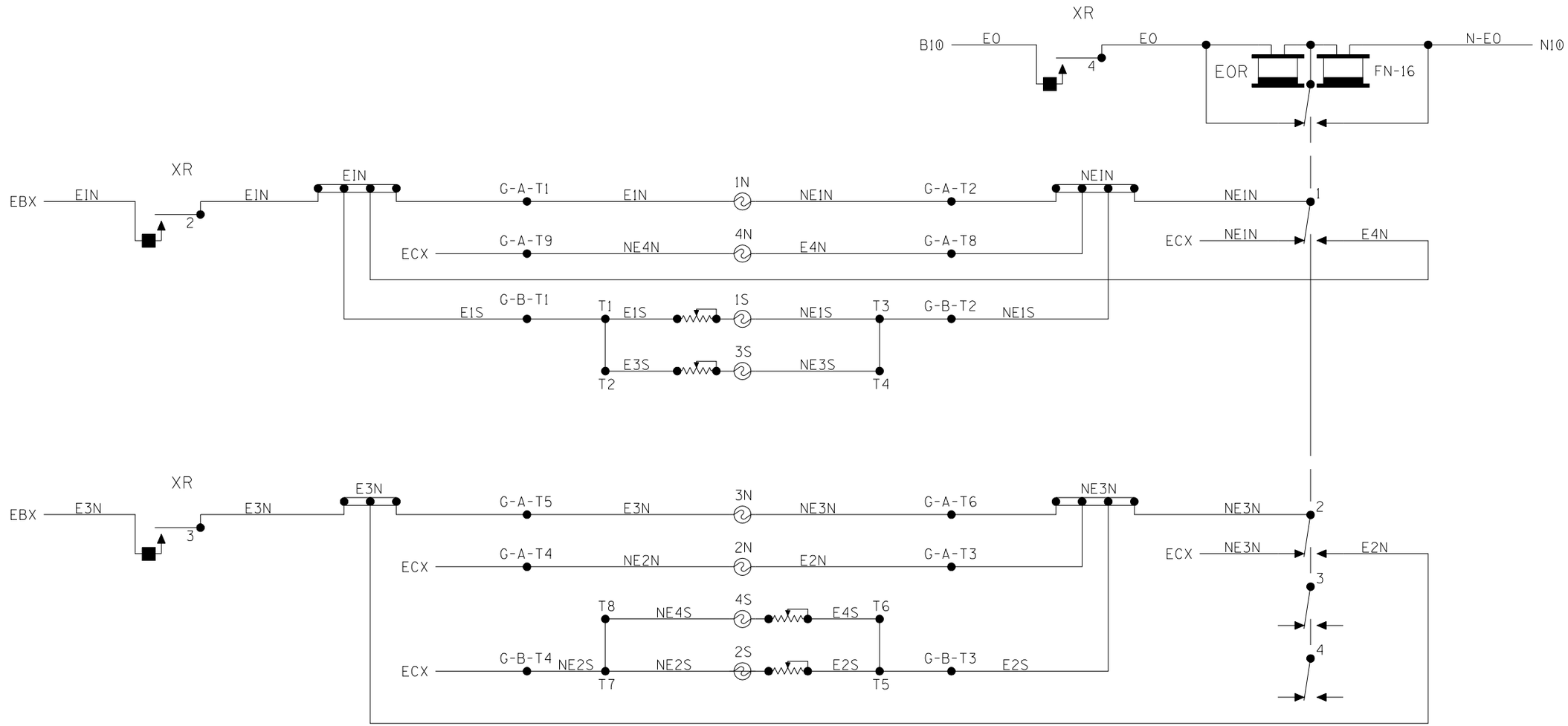

*10.2205
08-23-16
PRS
RED = IN
YELLOW = OUT

EOR - FLASHERS

DESIGNED BY: RJJ 12-16-92	NORFOLK SOUTHERN		
DRAWN BY: SWS 07-06-96	OFFICE OF ASS'T. VICE PRESIDENT COMM. & SIGNAL, ATLANTA, GA.	M.P.: SP-73.50	
CHECKED BY: - -	BLUFFTON, OHIO FLS at JEFFERSON STREET		
IN SERVICE: - -52	LIMA DISTRICT	FILE No. R-	
	CADD or DWG. No. LMPS07350.08 10	SHEET No. 8 10 of 10 12	

REVISION INITIALS										

PROPERTY
NORFOLK SOUTHERN RAILWAY CO.

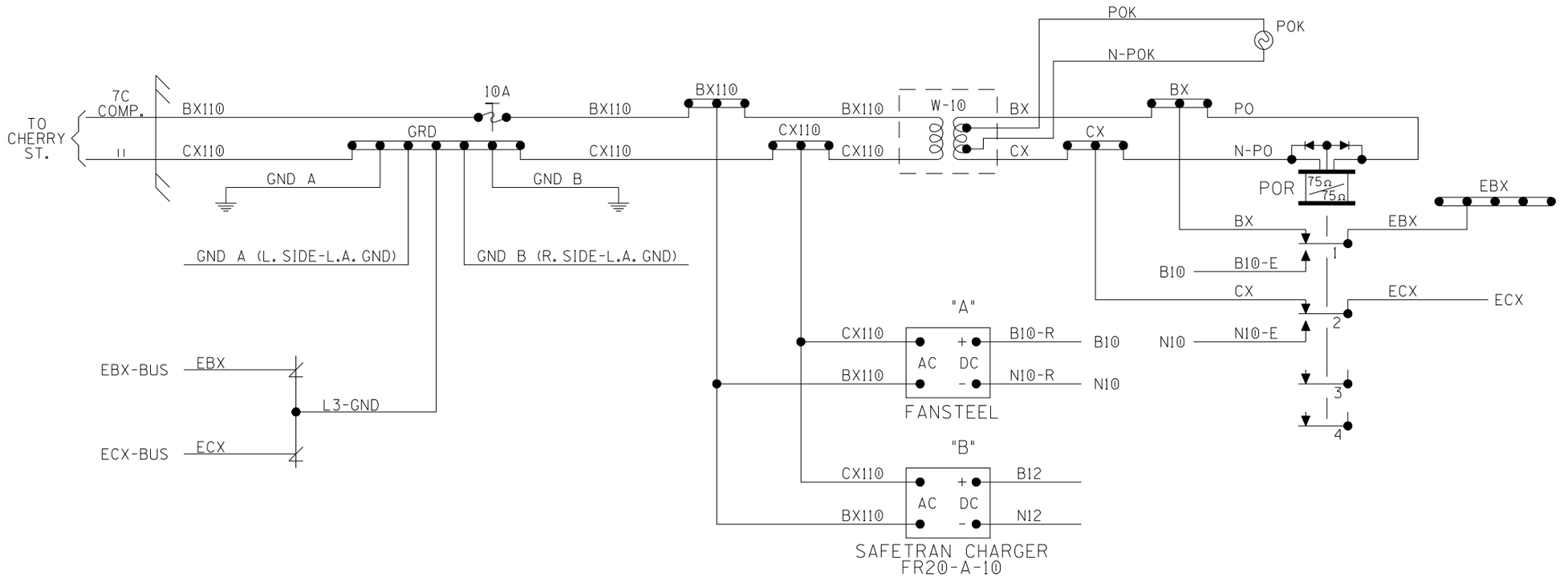

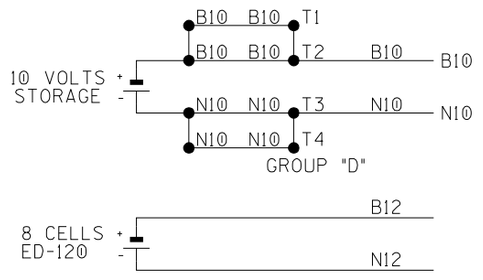

#10.2205
08-23-16
PRS
RED = IN
YELLOW = OUT

POR - POWER

DESIGNED BY: RJJ 12-16-92	NORFOLK SOUTHERN
DRAWN BY: SWS 07-06-96	OFFICE OF ASS'T. VICE PRESIDENT COMM. & SIGNAL, ATLANTA, GA. — M.P.: SP-73.50
CHECKED BY: - -	BLUFFTON, OHIO FLS at JEFFERSON STREET
IN SERVICE: - -52	LIMA DISTRICT — FILE No. R-
	CADD or DWG. No. LMPS07350.09 11 — SHEET No. 9 11 of 10 12

REVISION INITIALS	02-25-97 EGC

PROPERTY
NORFOLK SOUTHERN RAILWAY CO.

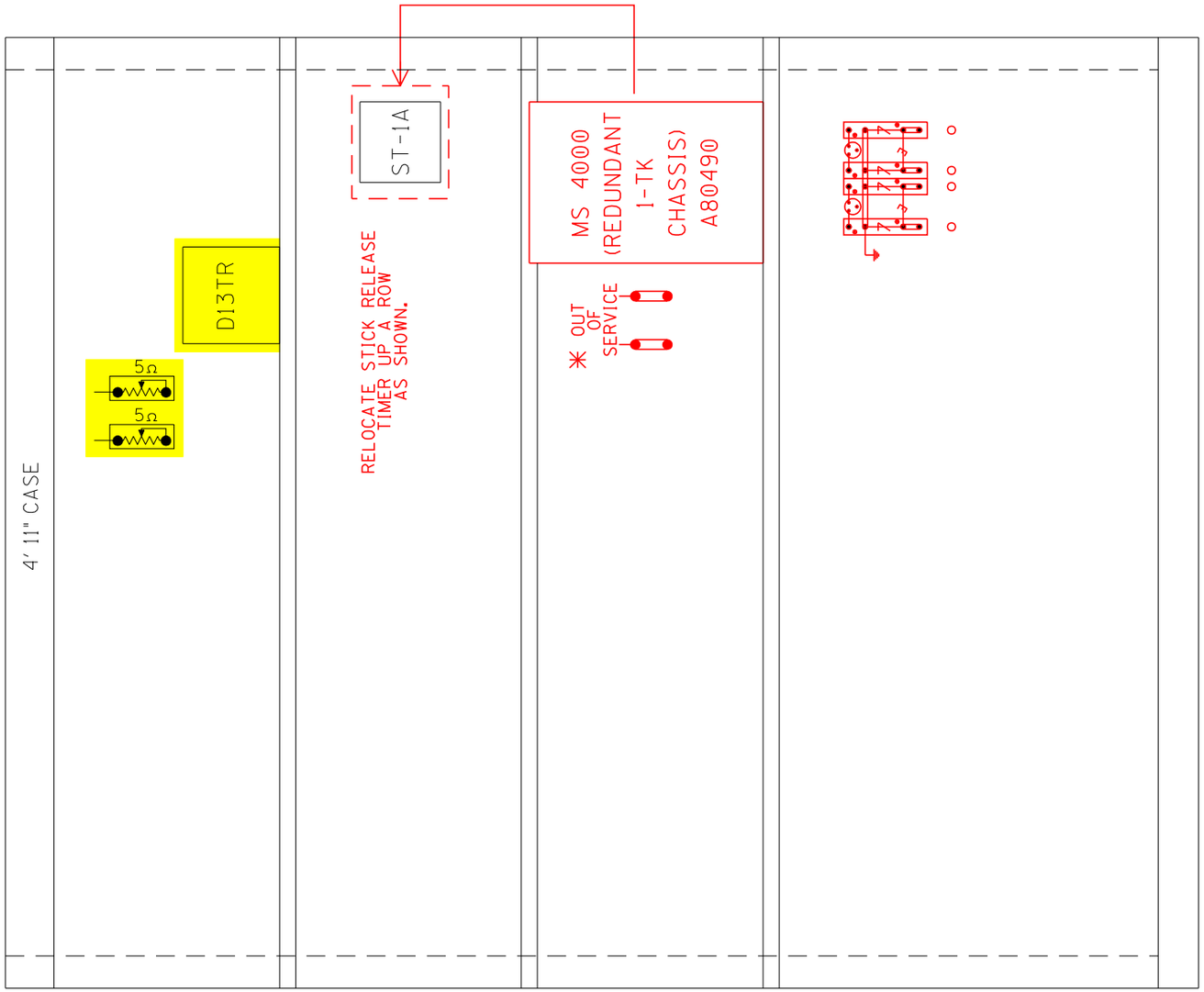

✳ OOS NOTE:

WHEN PLACING THE 4000 MS TRACK OOS, ONLY THE EAST (D13T) IS REMOVED FROM SERVICE. ADDITIONAL STEPS ARE NEEDED TO TAKE THE ENTIRE CROSSING OOS.

NOTE:

FIELD VERIFY AND PROVIDE PLACEMENT OF EQUIPPMENT.

#10.2205
08-23-16
PRS
RED = IN
YELLOW = OUT

CASE LAYOUT

DESIGNED BY: RJJ 12-16-92	NORFOLK SOUTHERN		
DRAWN BY: SWS 07-06-96	OFFICE OF ASS'T. VICE PRESIDENT COMM. & SIGNAL, ATLANTA, GA.	M.P.: SP-73.50	
CHECKED BY: - -	BLUFFTON, OHIO FLS at JEFFERSON STREET		
IN SERVICE: - -52	LIMA DISTRICT	FILE No. R-	
	CADD or DWG. No. LMPS07350.10 12	SHEET No. 10 12 of 10 12	

REVISION INITIALS										

PROPERTY
NORFOLK SOUTHERN RAILWAY CO.

SH. NO.	CONTENTS
NX1	INDEX SHEET
1	LAYOUT
2	PROFILE
3	CABLE
4	TRACK CIRCUITS
5	LINE CIRCUITS
6	STICK CIRCUITS
7	XR-GOR-NGOPR-SGOPR
8	EOR - FLASHERS
9	GATE "N"
10	GATE "S"
11	POWER
12	3'3" CASE LAYOUT
13	4'11" CASE LAYOUT

NEW SHEET
RED = IN

IN SERVICE_____ _____
SIGNED DATE

☐ S&E ENGINEERING COPY
☐ CONSTRUCTION OFFICE COPY
RETURN TO S&E ENG. AFTER COMPLETION
☐ FIELD COPY
RETURN TO CASE AFTER COMPLETION
☐ PROJECT ENGINEER COPY

INDEX SHEET

DESIGNED BY: TMW 08-23-16	NORFOLK SOUTHERN	
DRAWN BY: PRS 08-23-16	OFFICE OF ASS'T. VICE PRESIDENT COMM. & SIGNAL, ATLANTA, GA.	M.P.: SP-73.70
CHECKED BY: JMW 10-10-16	BLUFFTON, OH FLGS AT CHERRY STREET	
IN SERVICE: - -	LIMA DISTRICT	FILE No. R-
	CADD or DWG. No. LMPS07370.NX1	SHEET No. 1 of 1

REVISION INITIALS											

PROPERTY
NORFOLK SOUTHERN RAILWAY CO.

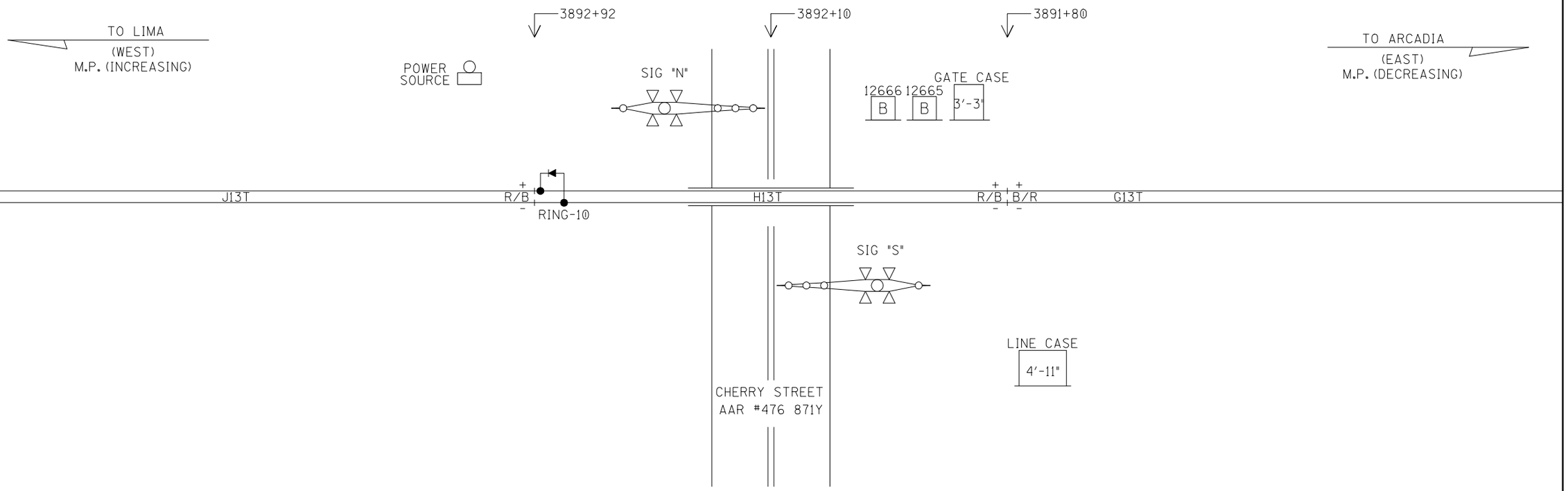

NOTES:

1. MAX. TRAIN SPEED 25 M.P.H.
2. BOTH SIGNALS HAVE BELLS.

LAYOUT

NO SCALE

DESIGNED BY: RJJ 12-16-92	NORFOLK SOUTHERN		
DRAWN BY: SWS 07-06-96	OFFICE OF ASS'T. VICE PRESIDENT COMM. & SIGNAL, ATLANTA, GA.	M.P.: SP-73.70	
CHECKED BY: - -	BLUFFTON, OHIO FLGS at CHERRY STREET		
IN SERVICE: - -46	LIMA DISTRICT	FILE No. R-	
	CADD or DWG. No. LMPS07370.01	SHEET No. 1 of 13	

REVISION INITIALS											

PROPERTY
NORFOLK SOUTHERN RAILWAY CO.

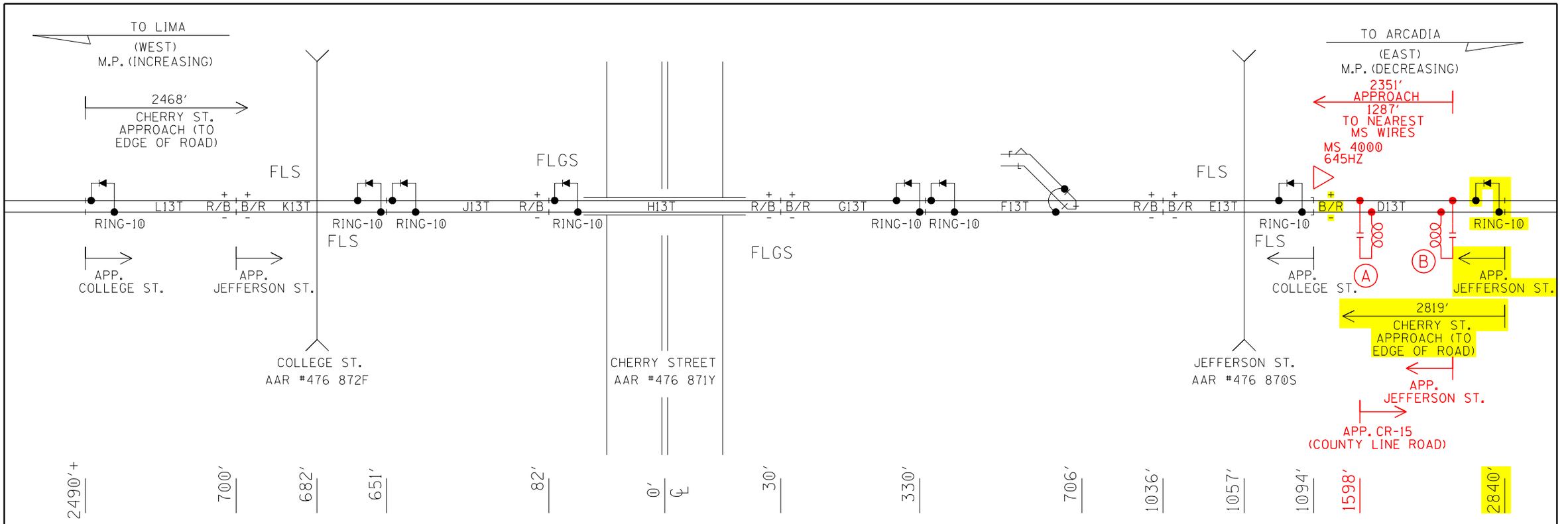

#10.2205
08-23-16
PRS
RED = IN
YELLOW = OUT

(A)- MF-NBS 62775-3497 (970HZ)

(B)- MF-NBS 62775-3497 (645HZ)

PROFILE

DESIGNED BY: RJJ 12-16-92	NORFOLK SOUTHERN		
DRAWN BY: SWS 07-06-96	OFFICE OF ASS'T. VICE PRESIDENT COMM. & SIGNAL, ATLANTA, GA.	M.P.: SP-73.70	
CHECKED BY: - -	BLUFFTON, OHIO FLGS at CHERRY STREET		
IN SERVICE: - -46	LIMA DISTRICT	FILE No. R-	
	CADD or DWG. No. LMPS07370.02	SHEET No. 2 of 13	

REVISION INITIALS	02-25-97 EGC								

PROPERTY
NORFOLK SOUTHERN RAILWAY CO.

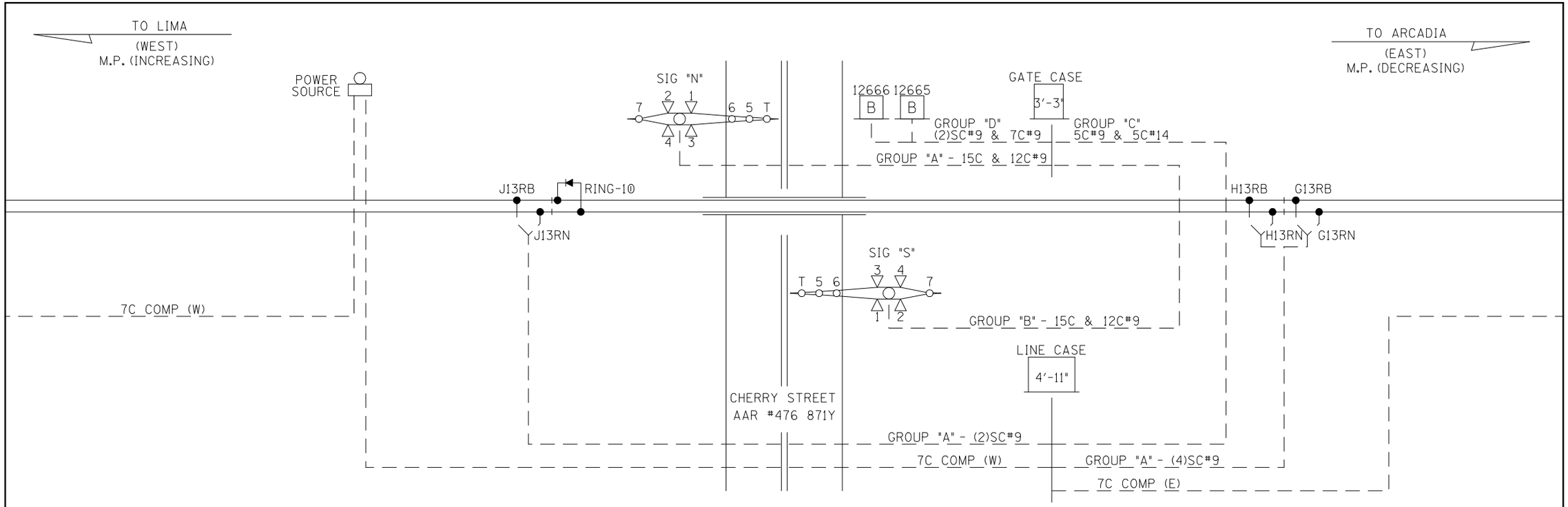

GROUP "A" - 15CUG#9	GROUP "A" - 12CUG#9	GROUP "B" - 15CUG#9	GROUP "B" - 12CUG#9	GROUP "C" - 5CUG#9	GROUP "D" - (2)SCUG#9	7C COMP (W)	7C COMP (E)
E1N	NX	E1S	SX	BX110	B	BX110	BX110
NE1N	NNX	NE1S	NSX	CX110	N	CX110	CX110
E2N	NY	E2S	SY	B		737EX	735EX
NE2N	NG-UP	NE2S	SG-UP	N		N737EX	N735EX
E3N	NG-UP	E3S	SG-UP	SPARE		738WX	737WX
NE3N	NG-DN	NE3S	SG-DN			N738WX	N737WX
E4N	NG-DN	E4S	SG-DN			SPARE	EFG13TP
NE4N	N-NG	NE4S	N-SG				
E5N	N-NG	E5S	N-SG				
NE5N	XP	NE5S	XP				
E6N	XP	E6S	XP				
NE6N	SPARE	NE6S	SPARE				
ETN		ETS					
NETN		NETS					
SPARE		SPARE					

GROUP "C" - 5CUG#14	GROUP "D" - 7CUG#9
XR	B14
SPARE	B14
SPARE	N14
SPARE	N14
SPARE	SPARE
	SPARE
	SPARE

CABLE

DESIGNED BY: RJJ 12-16-92	NORFOLK SOUTHERN		
DRAWN BY: SWS 07-06-96	OFFICE OF ASS'T. VICE PRESIDENT COMM. & SIGNAL, ATLANTA, GA.	M.P.:	SP-73.70
CHECKED BY: - -	BLUFFTON, OHIO FLGS at CHERRY STREET		
IN SERVICE: - -46	LIMA DISTRICT	FILE No.	R-
	CADD or DWG. No. LMPS07370.03	SHEET No.	3 of 13

REVISION INITIALS										

PROPERTY
NORFOLK SOUTHERN RAILWAY CO.

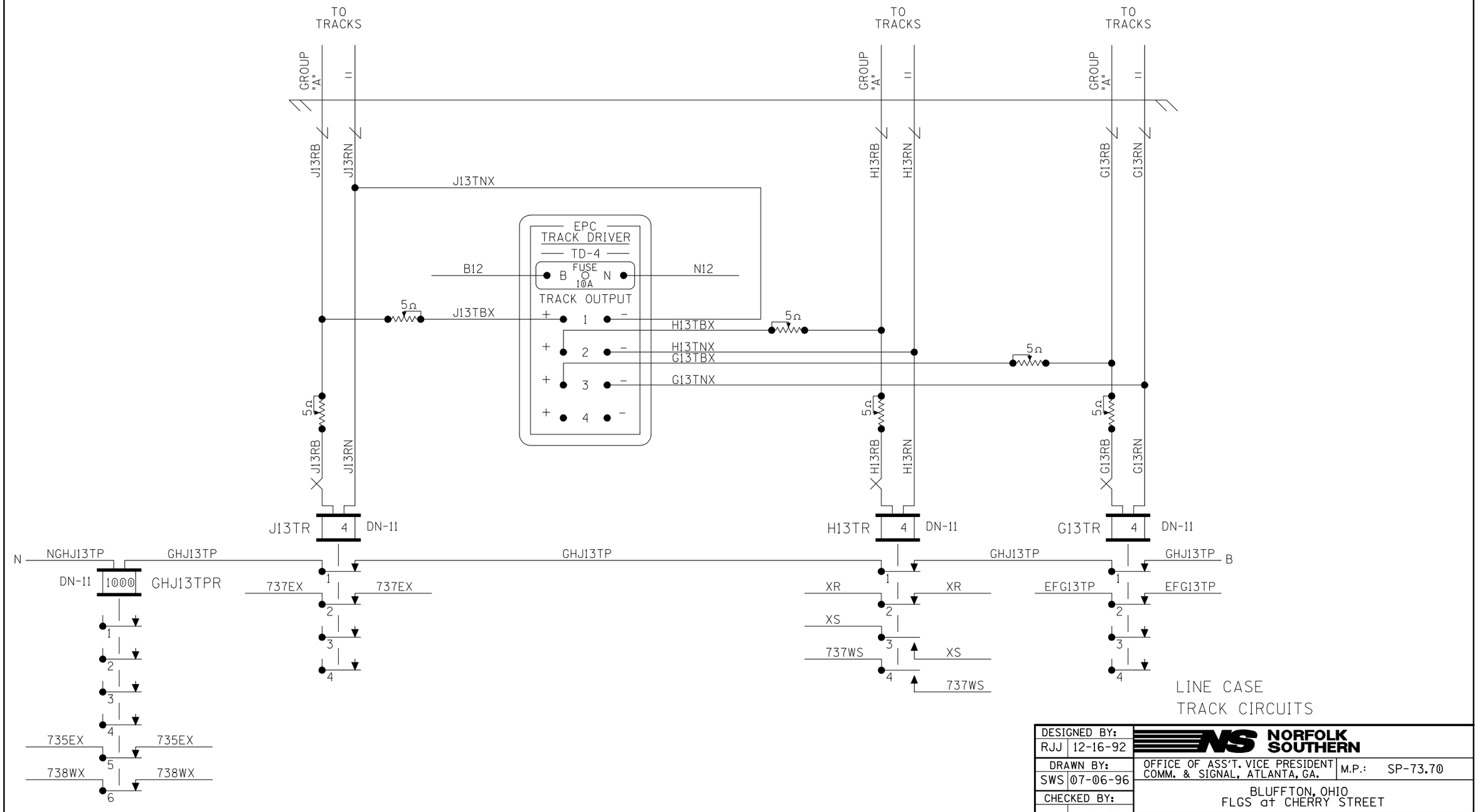

DESIGNED BY: RJJ 12-16-92	NORFOLK SOUTHERN		
DRAWN BY: SWS 07-06-96	OFFICE OF ASS'T. VICE PRESIDENT COMM. & SIGNAL, ATLANTA, GA.	M.P.: SP-73.70	
CHECKED BY: - -	BLUFFTON, OHIO FLGS at CHERRY STREET		
IN SERVICE: - -46	LIMA DISTRICT	FILE No. R-	
	CADD or DWG. No. LMPS07370.04	SHEET No. 4 of 13	

REVISION INITIALS	02-25-97 EGC

PROPERTY
NORFOLK SOUTHERN RAILWAY CO.

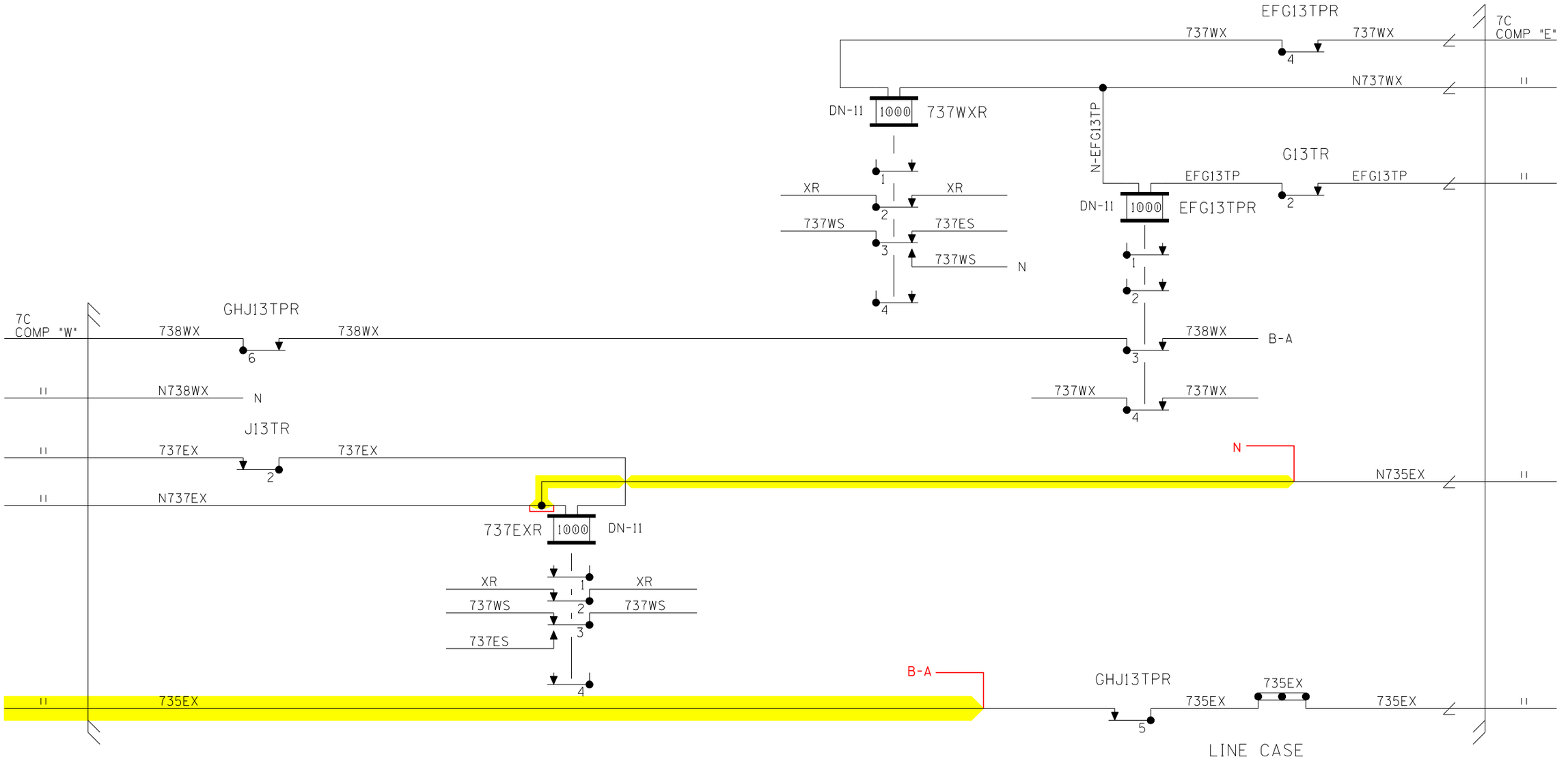

LINE CASE
LINE CIRCUITS

#10.2205
08-23-16
PRS
RED = IN
YELLOW = OUT

DESIGNED BY: RJJ 12-16-92	NORFOLK SOUTHERN
DRAWN BY: SWS 07-06-96	OFFICE OF ASS'T. VICE PRESIDENT COMM. & SIGNAL, ATLANTA, GA. — M.P.: SP-73.70
CHECKED BY: - -	BLUFFTON, OHIO FLGS at CHERRY STREET
IN SERVICE: - -46	LIMA DISTRICT — FILE No. R-
	CADD or DWG. No. LMPS07370.05 — SHEET No. 5 of 13

REVISION INITIALS	02-25-97 EGC								

PROPERTY
NORFOLK SOUTHERN RAILWAY CO.

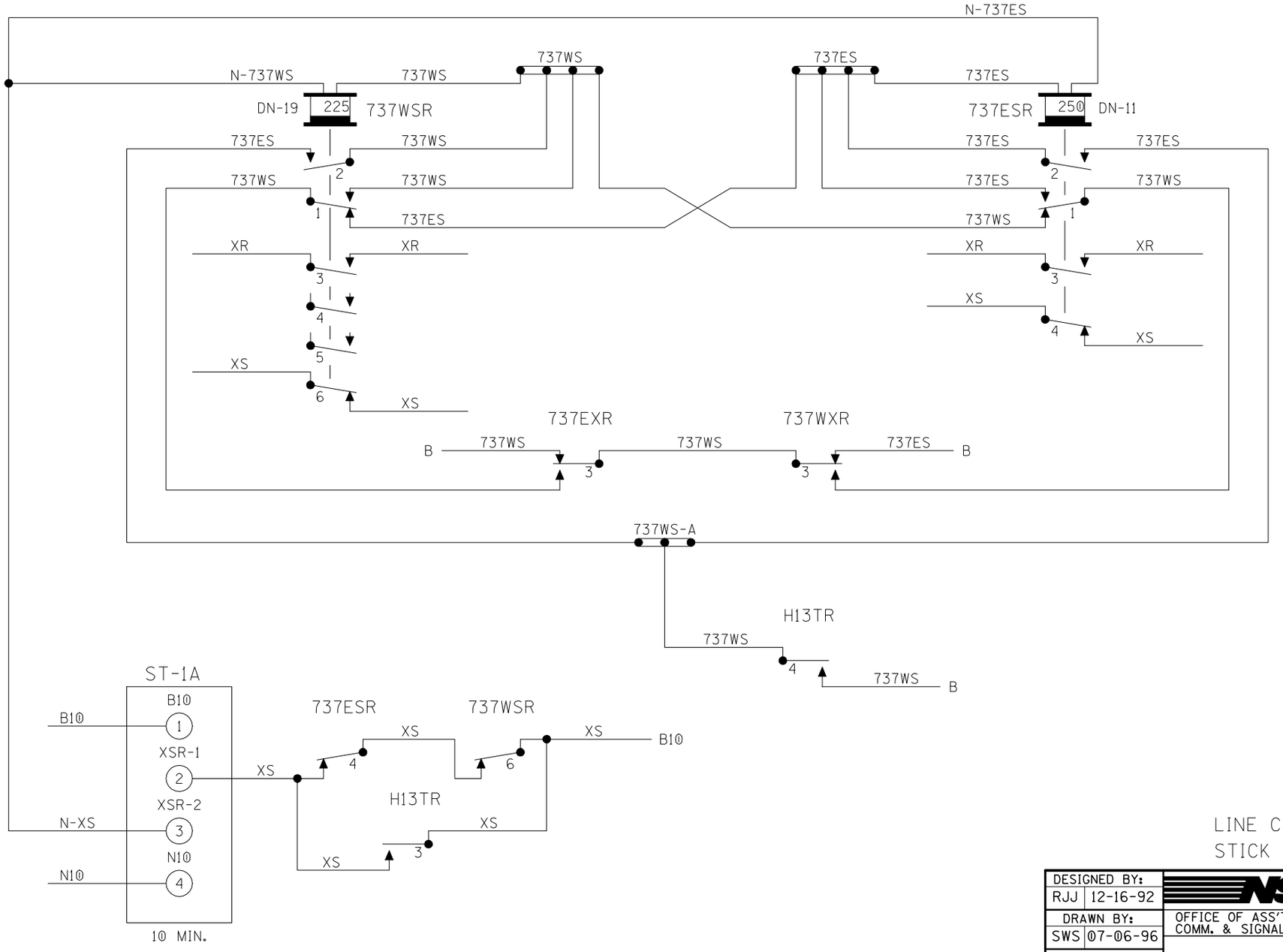

LINE CASE
STICK CIRCUITS

DESIGNED BY: RJJ 12-16-92	NORFOLK SOUTHERN		
DRAWN BY: SWS 07-06-96	OFFICE OF ASS'T. VICE PRESIDENT COMM. & SIGNAL, ATLANTA, GA.	M.P.: SP-73.70	
CHECKED BY: - -	BLUFFTON, OHIO FLGS at CHERRY STREET		
IN SERVICE: - -46	LIMA DISTRICT	FILE No. R-	
	CADD or DWG. No. LMPS07370.06	SHEET No. 6 of 13	

REVISION INITIALS	02-25-97 EGC								

PROPERTY
NORFOLK SOUTHERN RAILWAY CO.

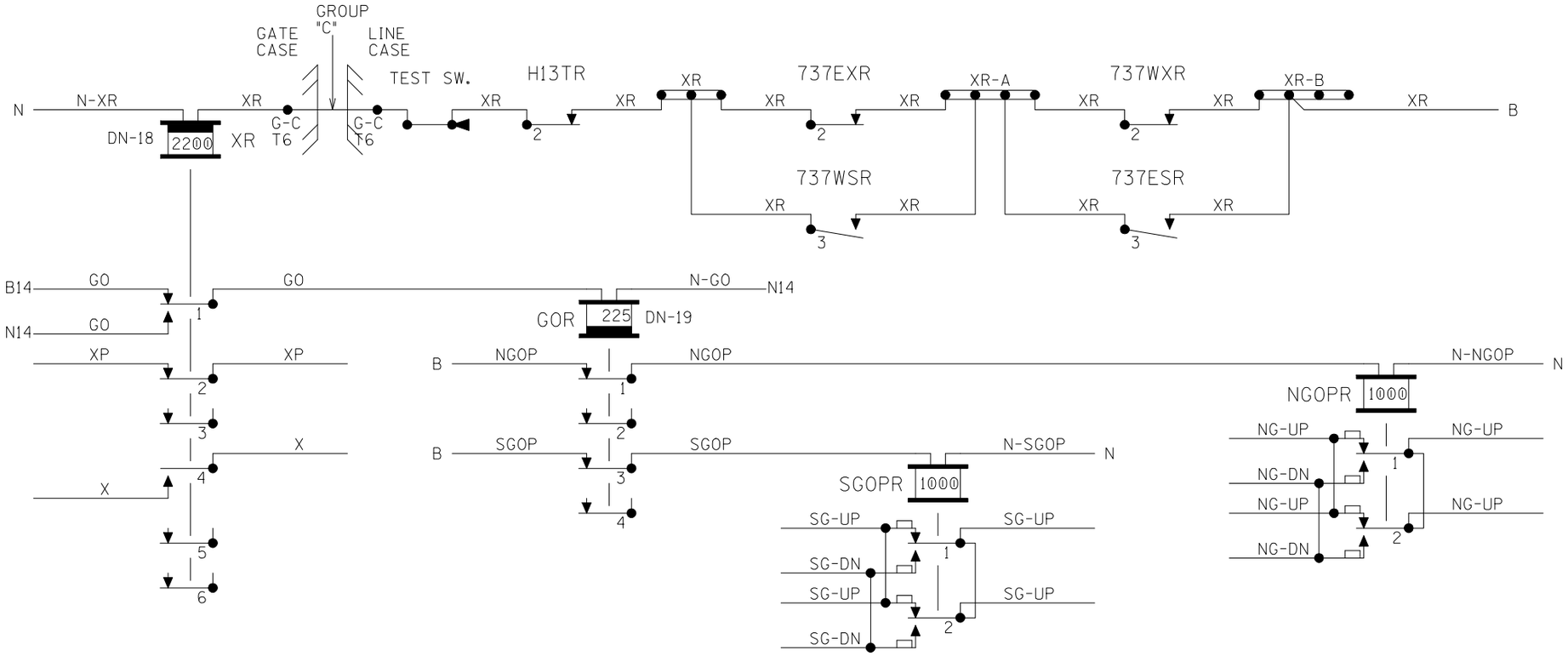

LINE & GATE CASES
XR - GOR - NGOPR - SGOPR

DESIGNED BY: RJJ 12-16-92	NORFOLK SOUTHERN		
DRAWN BY: SWS 07-06-96	OFFICE OF ASS'T. VICE PRESIDENT COMM. & SIGNAL, ATLANTA, GA.	M.P.: SP-73.70	
CHECKED BY: - -	BLUFFTON, OHIO FLGS at CHERRY STREET		
IN SERVICE: - -46	LIMA DISTRICT	FILE No. R-	
	CADD or DWG. No. LMPS07370.07	SHEET No. 7 of 13	

REVISION INITIALS	02-25-97 EGC									

PROPERTY
NORFOLK SOUTHERN RAILWAY CO.

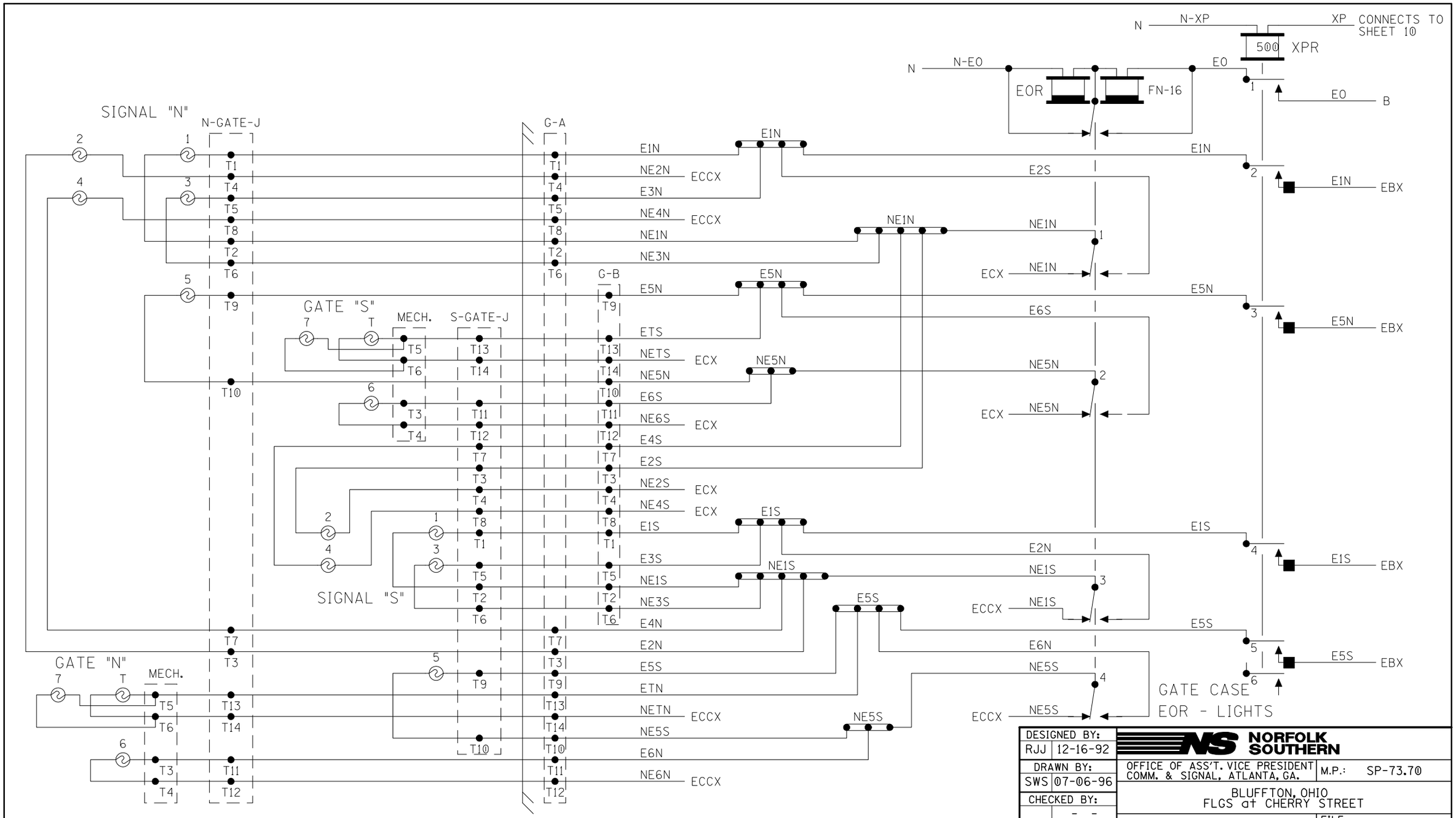

DESIGNED BY: RJJ 12-16-92	NORFOLK SOUTHERN		
DRAWN BY: SWS 07-06-96	OFFICE OF ASS'T. VICE PRESIDENT COMM. & SIGNAL, ATLANTA, GA.	M.P.: SP-73.70	
CHECKED BY: - -	BLUFFTON, OHIO FLGS at CHERRY STREET		
IN SERVICE: - -46	LIMA DISTRICT	FILE No. R-	
	CADD or DWG. No. LMPS07370.08	SHEET No. 8 of 13	

REVISION INITIALS

PROPERTY
NORFOLK SOUTHERN RAILWAY CO.

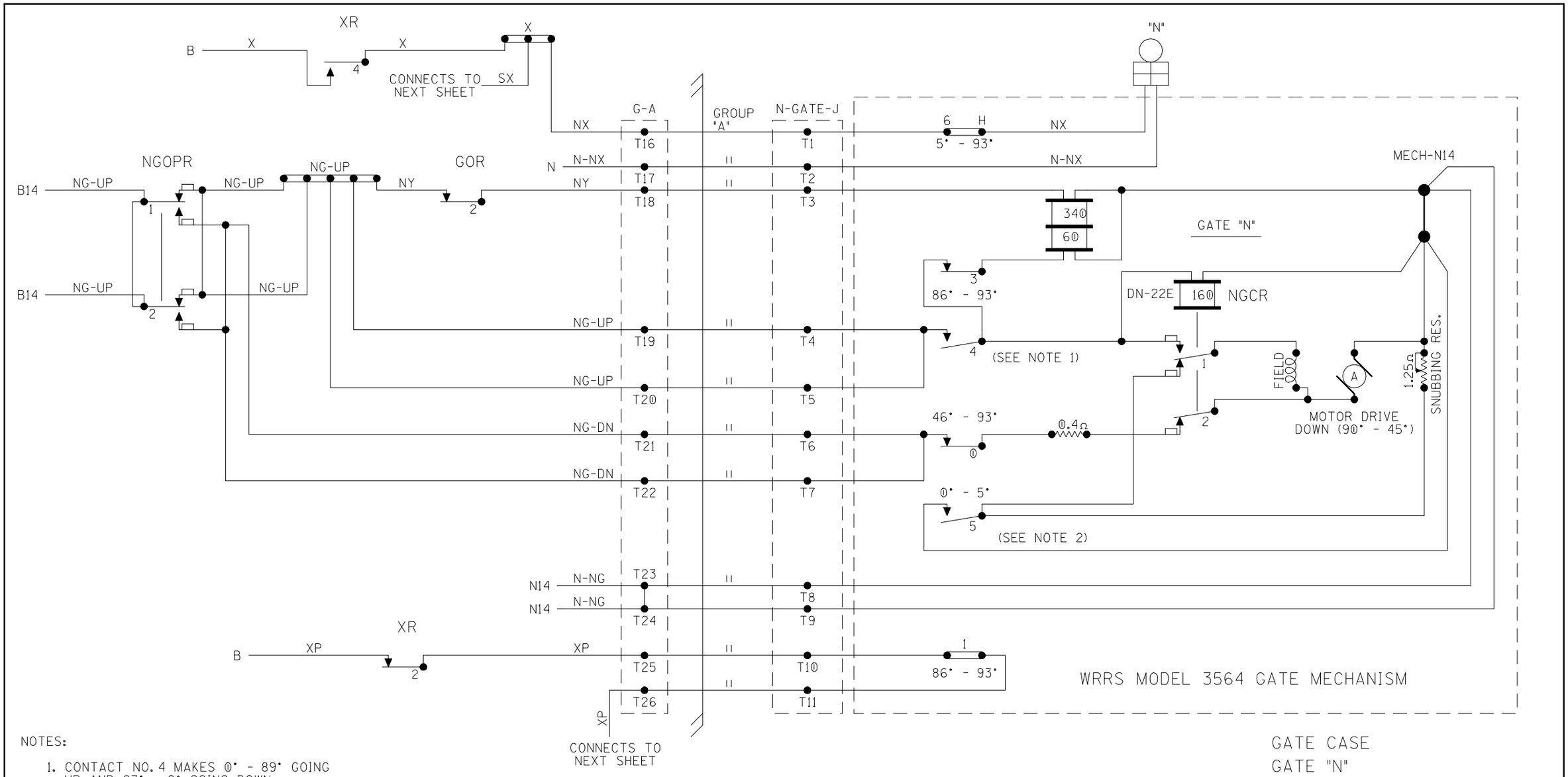

NOTES:

1. CONTACT NO. 4 MAKES 0° - 89° GOING UP AND 83° - 0° GOING DOWN.

2. CONTACT NO. 5 TO BE ADJUSTED BETWEEN 0° - 5° AND 0° - 10° DEPENDING UPON LENGTH OF ARM TO PROVIDE PROPER CUSHIONING WHEN NEARING HORIZONTAL POSITION (THE EFFECT THIS ADJUSTMENT HAS ON CONTACTS NO. 6 AND NO. 7 MAY BE DISREGARDED).

GATE CASE
GATE "N"

DESIGNED BY: RJJ 12-16-92	NORFOLK SOUTHERN		
DRAWN BY: SWS 07-06-96	OFFICE OF ASS'T. VICE PRESIDENT COMM. & SIGNAL, ATLANTA, GA.	M.P.: SP-73.70	
CHECKED BY: - -	BLUFFTON, OHIO FLGS at CHERRY STREET		
IN SERVICE: - -46	LIMA DISTRICT	FILE No. R-	
	CADD or DWG. No. LMPS07370.09	SHEET No. 9 of 13	

REVISION INITIALS											

PROPERTY
NORFOLK SOUTHERN RAILWAY CO.

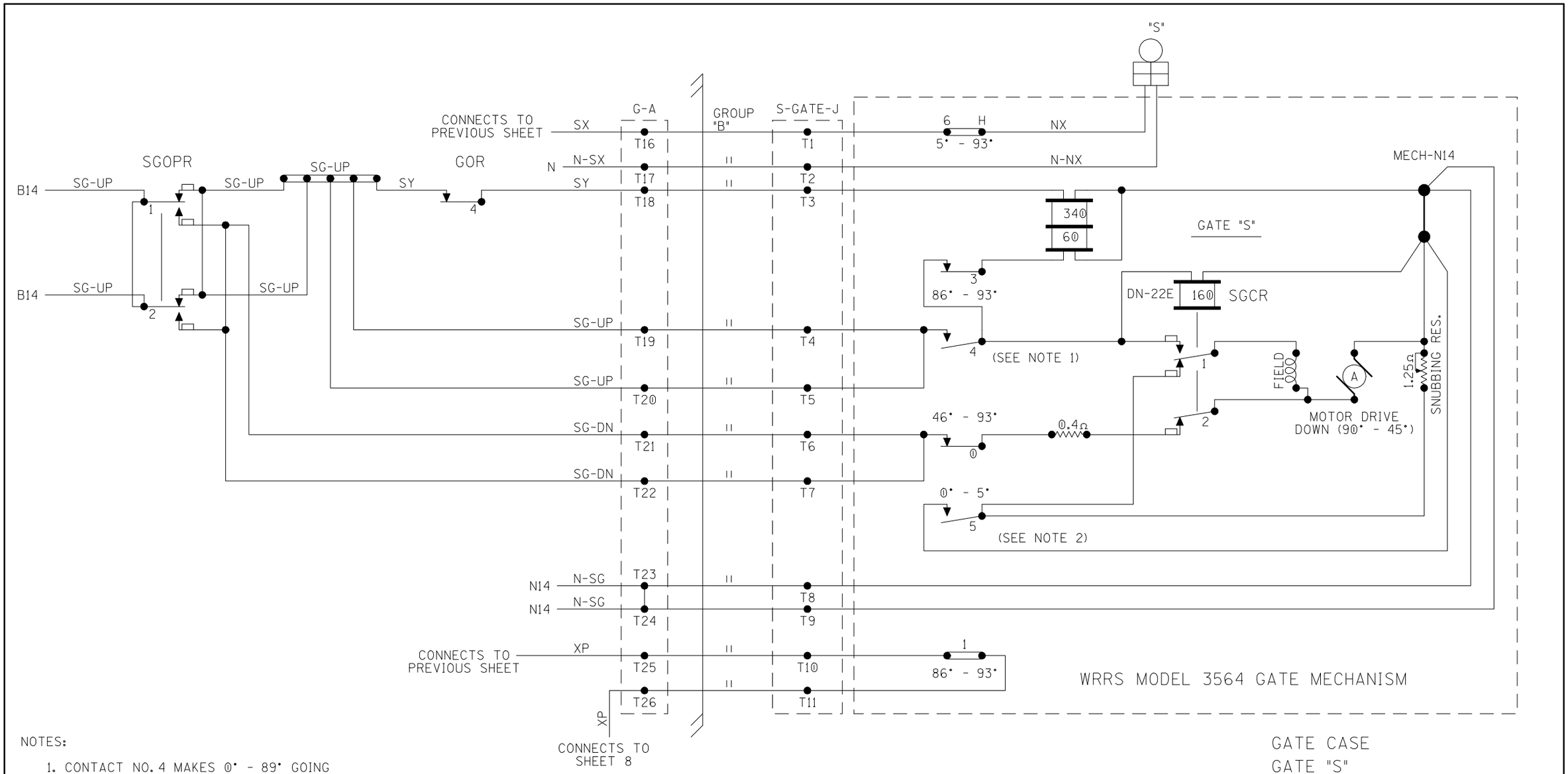

NOTES:

1. CONTACT NO. 4 MAKES 0° - 89° GOING UP AND 83° - 0° GOING DOWN.

2. CONTACT NO. 5 TO BE ADJUSTED BETWEEN 0° - 5° AND 0° - 10° DEPENDING UPON LENGTH OF ARM TO PROVIDE PROPER CUSHIONING WHEN NEARING HORIZONTAL POSITION (THE EFFECT THIS ADJUSTMENT HAS ON CONTACTS NO. 6 AND NO. 7 MAY BE DISREGARDED).

DESIGNED BY: RJJ 12-16-92	NORFOLK SOUTHERN		
DRAWN BY: SWS 07-06-96	OFFICE OF ASS'T. VICE PRESIDENT COMM. & SIGNAL, ATLANTA, GA.	M.P.: SP-73.70	
CHECKED BY: - -	BLUFFTON, OHIO FLGS at CHERRY STREET		
IN SERVICE: - -46	LIMA DISTRICT	FILE No. R-	
	CADD or DWG. No. LMPS07370.10	SHEET No. 10 of 13	

REVISION INITIALS											

PROPERTY
NORFOLK SOUTHERN RAILWAY CO.

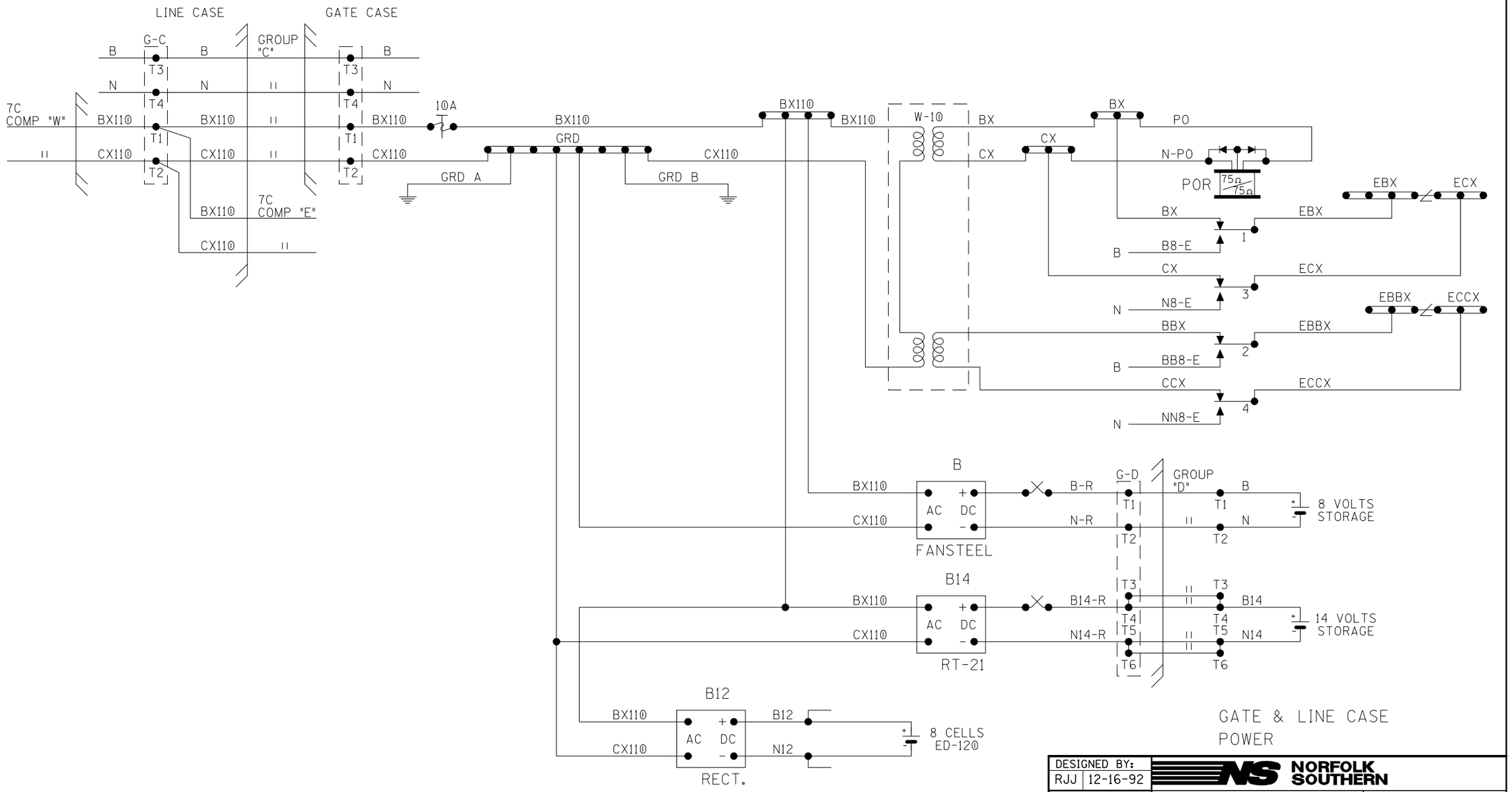

DESIGNED BY: RJJ 12-16-92	NORFOLK SOUTHERN		
DRAWN BY: SWS 07-06-96	OFFICE OF ASS'T. VICE PRESIDENT COMM. & SIGNAL, ATLANTA, GA.	M.P.: SP-73.70	
CHECKED BY: - -	BLUFFTON, OHIO FLGS at CHERRY STREET		
IN SERVICE: - -46	LIMA DISTRICT	FILE No. R-	
	CADD or DWG. No. LMPS07370.11	SHEET No. 11 of 13	

REVISION INITIALS	02-25-97 EGC								

PROPERTY
NORFOLK SOUTHERN RAILWAY CO.

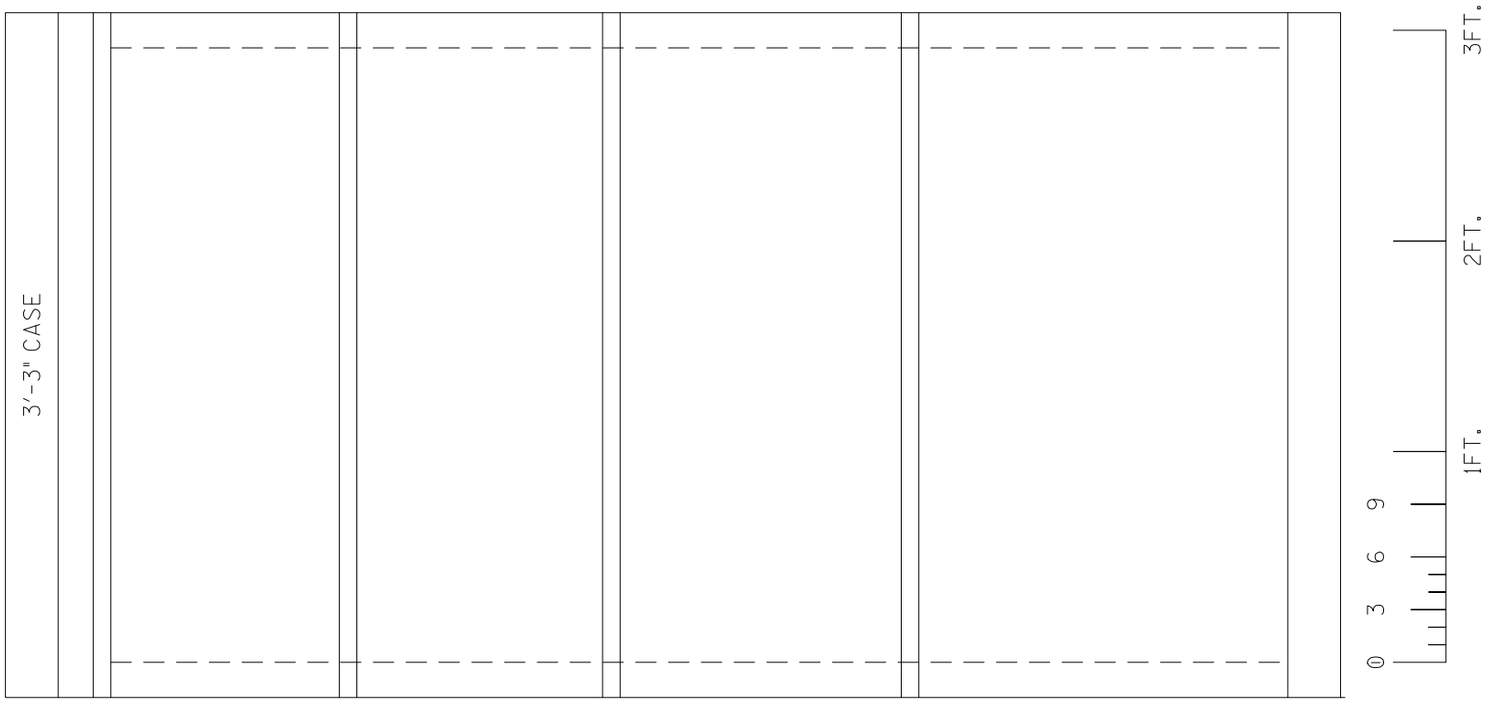

GATE CASE
LAYOUT

DESIGNED BY: RJJ 12-16-92	NORFOLK SOUTHERN		
DRAWN BY: SWS 07-06-96	OFFICE OF ASS'T. VICE PRESIDENT COMM. & SIGNAL, ATLANTA, GA.	M.P.: SP-73.70	
CHECKED BY: - -	BLUFFTON, OHIO FLGS at CHERRY STREET		
IN SERVICE: - -46	LIMA DISTRICT	FILE No. R-	
	CADD or DWG. No. LMPS07370.12	SHEET No. 12 of 13	

REVISION INITIALS										

PROPERTY
NORFOLK SOUTHERN RAILWAY CO.

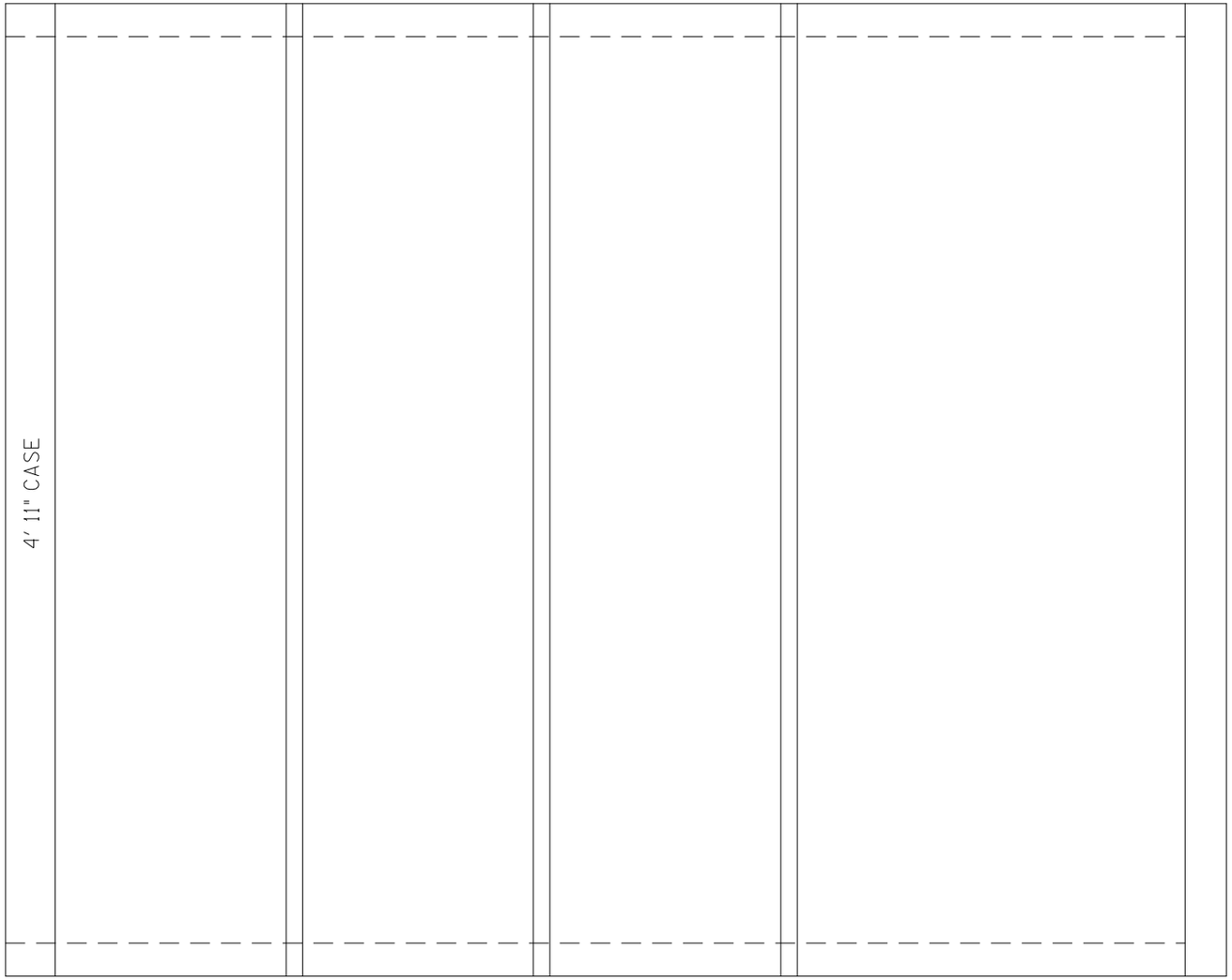

LINE CASE
LAYOUT

DESIGNED BY: RJJ 12-16-92	NORFOLK SOUTHERN		
DRAWN BY: SWS 07-06-96	OFFICE OF ASS'T. VICE PRESIDENT COMM. & SIGNAL, ATLANTA, GA.	M.P.: SP-73.70	
CHECKED BY: - -	BLUFFTON, OHIO FLGS at CHERRY STREET		
IN SERVICE: - -46	LIMA DISTRICT	FILE No. R-	
	CADD or DWG. No. LMPS07370.13	SHEET No. 13 of 13	

REVISION INITIALS										

PROPERTY
NORFOLK SOUTHERN RAILWAY CO.

SH. NO.	CONTENTS
NX1	INDEX SHEET
1	LAYOUT
2	PROFILE
3	CABLE
4	TRACK CIRCUITS
5	LINE CIRCUITS
6	STICK CIRCUITS
7	XR
8	EOR - LIGHTS
9	POWER
10	LAYOUT

NEW SHEET
RED = IN

IN SERVICE_____ _____
SIGNED DATE

☐ S&E ENGINEERING COPY
☐ CONSTRUCTION OFFICE COPY
RETURN TO S&E ENG. AFTER COMPLETION
☐ FIELD COPY
RETURN TO CASE AFTER COMPLETION
☐ PROJECT ENGINEER COPY

INDEX SHEET

DESIGNED BY: TMW 08-23-16	NORFOLK SOUTHERN	
DRAWN BY: PRS 08-23-16	OFFICE OF ASS'T. VICE PRESIDENT COMM. & SIGNAL, ATLANTA, GA.	M.P.: SP-73.80
CHECKED BY: JMW 10-10-16	BLUFFTON, OH FLGS AT COLLEGE STREET	
IN SERVICE: - -	LIMA DISTRICT	FILE No. R-
	CADD or DWG. No. LMPS07380.NX1	SHEET No. 1 of 1

REVISION INITIALS											

PROPERTY
NORFOLK SOUTHERN RAILWAY CO.

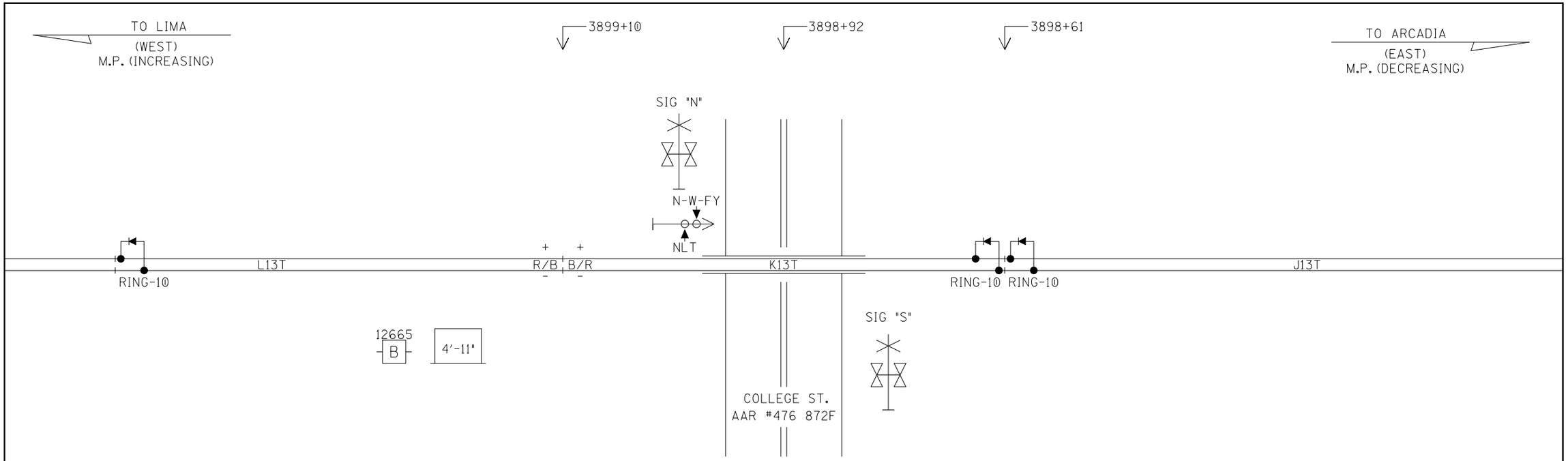

NOTES:

1. MAX. TRAIN SPEED 25 M.P.H.

LAYOUT

NO SCALE

DESIGNED BY: RJJ 12-16-92	NORFOLK SOUTHERN
DRAWN BY: SWS 07-06-96	OFFICE OF ASS'T. VICE PRESIDENT COMM. & SIGNAL, ATLANTA, GA. — M.P.: SP-73.80
CHECKED BY: - -	BLUFFTON, OHIO FLGS at COLLEGE STREET
IN SERVICE: - -52	LIMA DISTRICT — FILE No. R-
	CADD or DWG. No. LMPS07380.01 — SHEET No. 1 of 10

REVISION INITIALS

PROPERTY
NORFOLK SOUTHERN RAILWAY CO.

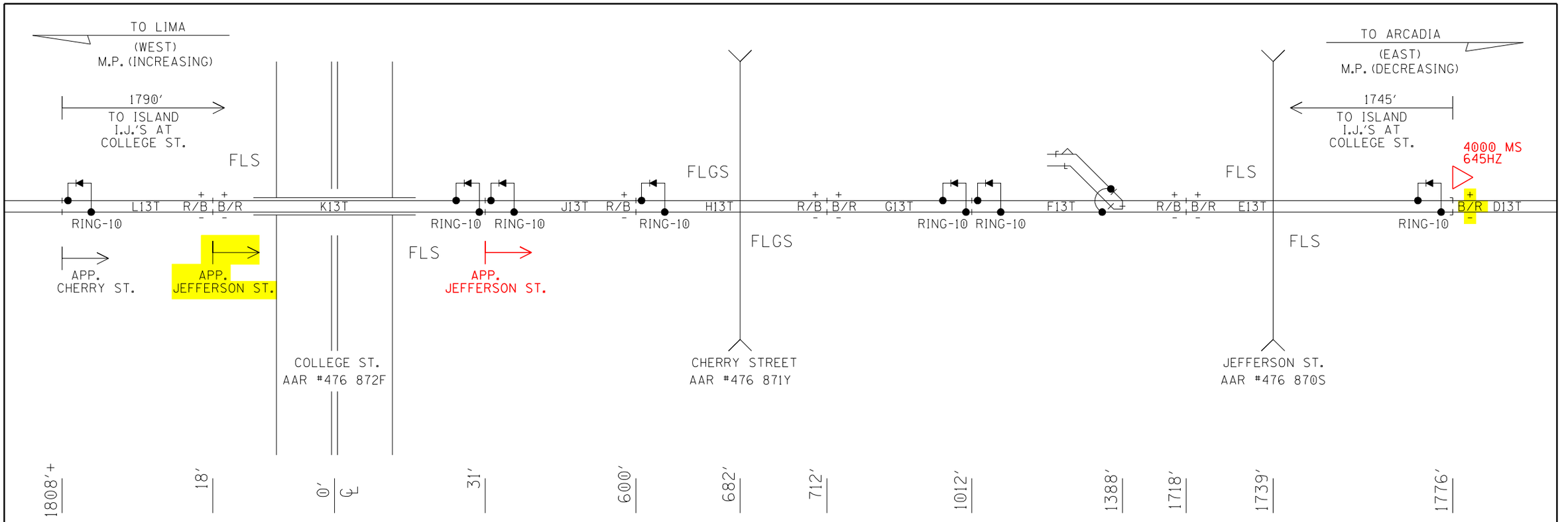

#10.2205
08-23-16
PRS
RED = IN
YELLOW = OUT

PROFILE

DESIGNED BY: RJJ 12-16-92	NORFOLK SOUTHERN		
DRAWN BY: SWS 07-06-96	OFFICE OF ASS'T. VICE PRESIDENT COMM. & SIGNAL, ATLANTA, GA.	M.P.: SP-73.80	
CHECKED BY: - -	BLUFFTON, OHIO FLS at COLLEGE STREET		
IN SERVICE: - -52	LIMA DISTRICT	FILE No. R-	
	CADD or DWG. No. LMPS07380.02	SHEET No. 2 of 10	

REVISION INITIALS	02-25-97 EGC								

PROPERTY
NORFOLK SOUTHERN RAILWAY CO.

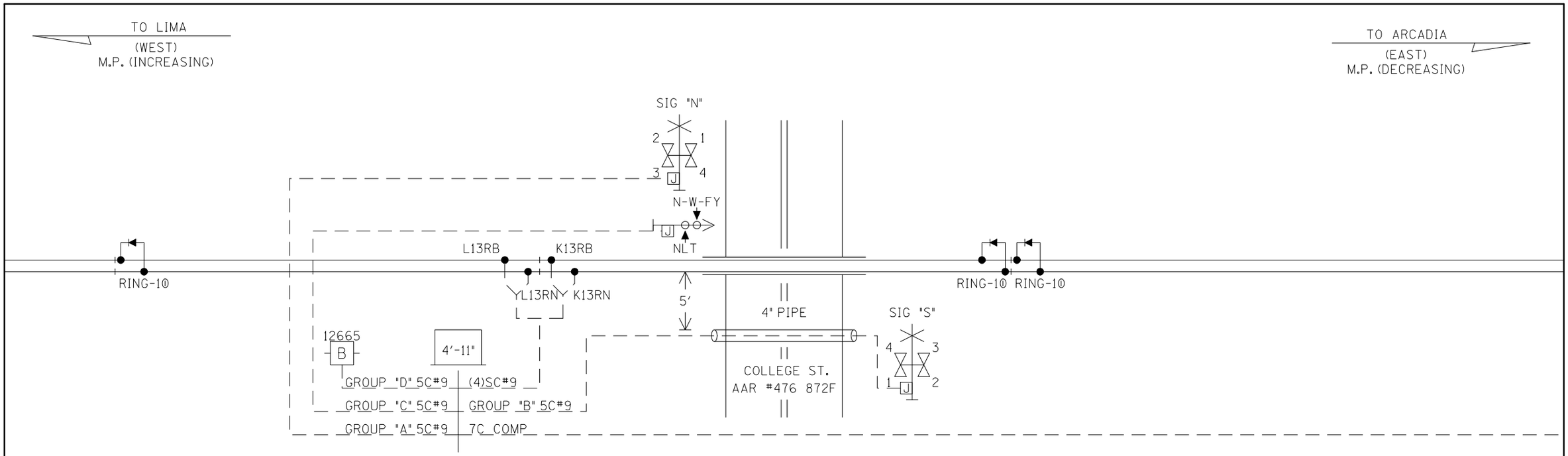

GROUP "A" - 5CUG#9	GROUP "C" - 5CUG#9	GROUP "D" 5CUG#9
E1N	N-W-FY	B
NE1N	N-N-W-FY	B
E2N	NLT	N
NE2N	N-NLT	N
SPARE	SPARE	SPARE

GROUP "B" - 5CUG#9	(4)SC#9	7C COMP
E1S	K13RB	BX110
NE1S	K13RN	CX110
E2S	L13RB	737EX
NE2S	L13RN	N737EX
SPARE		738WX
		N738WX
		SPARE

CABLE

DESIGNED BY: RJJ 12-16-92	NORFOLK SOUTHERN		
DRAWN BY: SWS 07-06-96	OFFICE OF ASS'T. VICE PRESIDENT COMM. & SIGNAL, ATLANTA, GA.	M.P.: SP-73.80	
CHECKED BY: - -	BLUFFTON, OHIO FLS at COLLEGE STREET		
IN SERVICE: - -52	LIMA DISTRICT	FILE No. R-	
	CADD or DWG. No. LMPS07380.03	SHEET No. 3 of 10	

REVISION INITIALS										

PROPERTY
NORFOLK SOUTHERN RAILWAY CO.

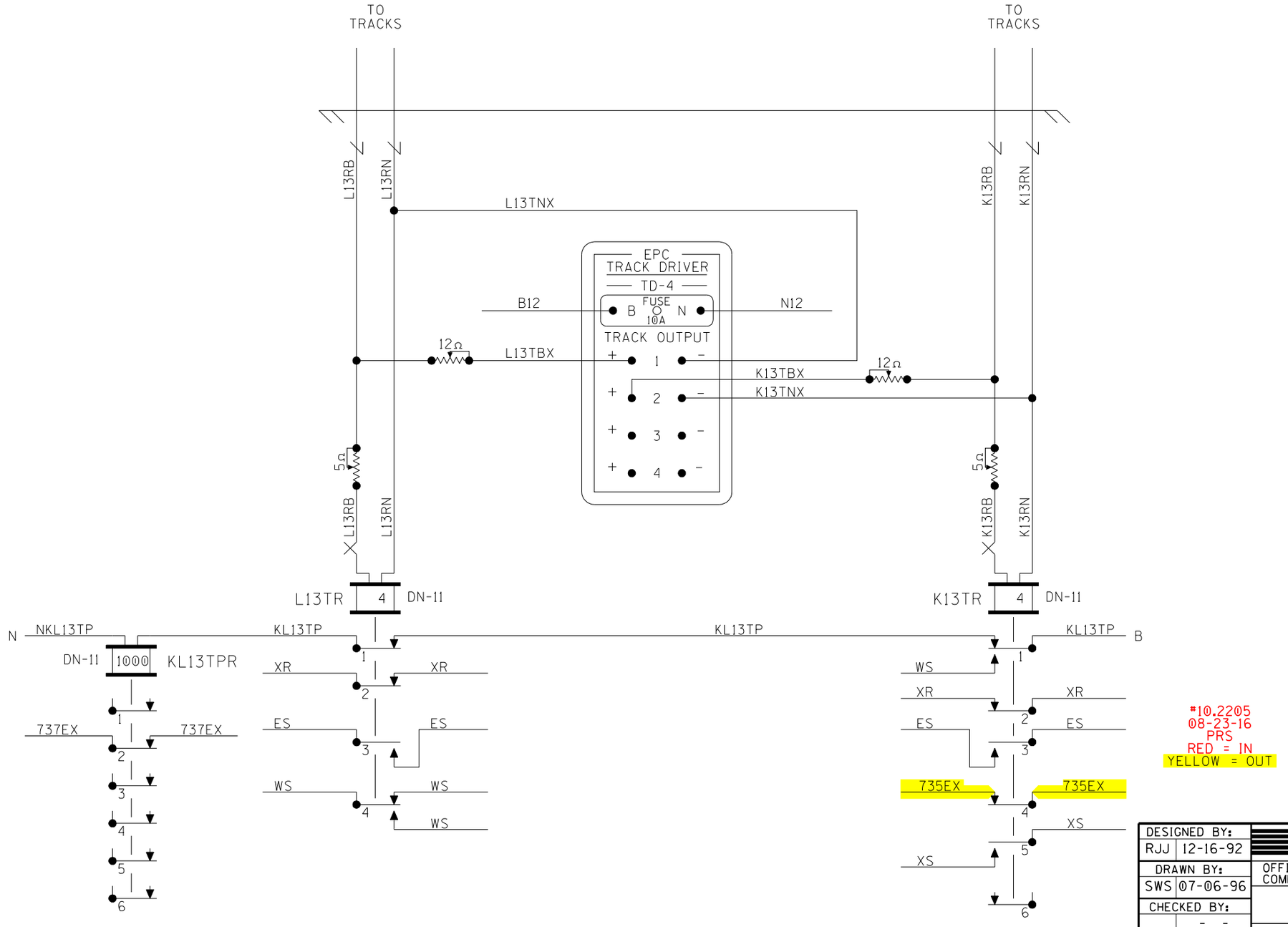

#10.2205
08-23-16
PRS
RED = IN
YELLOW = OUT

TRACK CIRCUITS

DESIGNED BY: RJJ 12-16-92	NORFOLK SOUTHERN		
DRAWN BY: SWS 07-06-96	OFFICE OF ASS'T. VICE PRESIDENT COMM. & SIGNAL, ATLANTA, GA.	M.P.: SP-73.80	
CHECKED BY: - -	BLUFFTON, OHIO FLS at COLLEGE STREET		
IN SERVICE: - -52	LIMA DISTRICT	FILE No. R-	
	CADD or DWG. No. LMPS07380.04	SHEET No. 4 of 10	

REVISION INITIALS	02-25-97 EGC

PROPERTY
NORFOLK SOUTHERN RAILWAY CO.

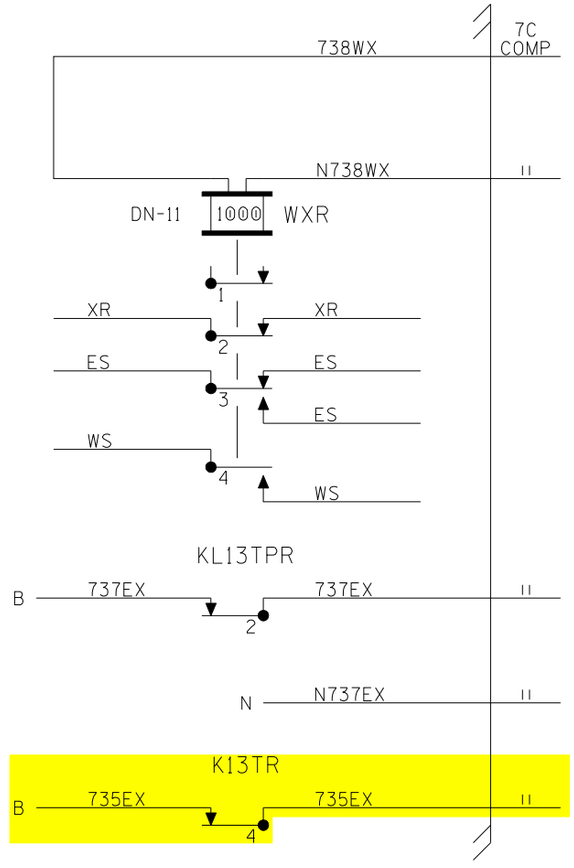

#10.2205
08-23-16
PRS
RED = IN
YELLOW = OUT

LINE CIRCUITS

DESIGNED BY: RJJ 12-16-92	NORFOLK SOUTHERN		
DRAWN BY: SWS 07-06-96	OFFICE OF ASS'T. VICE PRESIDENT COMM. & SIGNAL, ATLANTA, GA.	M.P.: SP-73.80	
CHECKED BY: - -	BLUFFTON, OHIO FLS at COLLEGE STREET		
IN SERVICE: - -52	LIMA DISTRICT	FILE No. R-	
	CADD or DWG. No. LMPS07380.05	SHEET No. 5 of 10	

REVISION INITIALS	02-25-97 EGC									

PROPERTY
NORFOLK SOUTHERN RAILWAY CO.

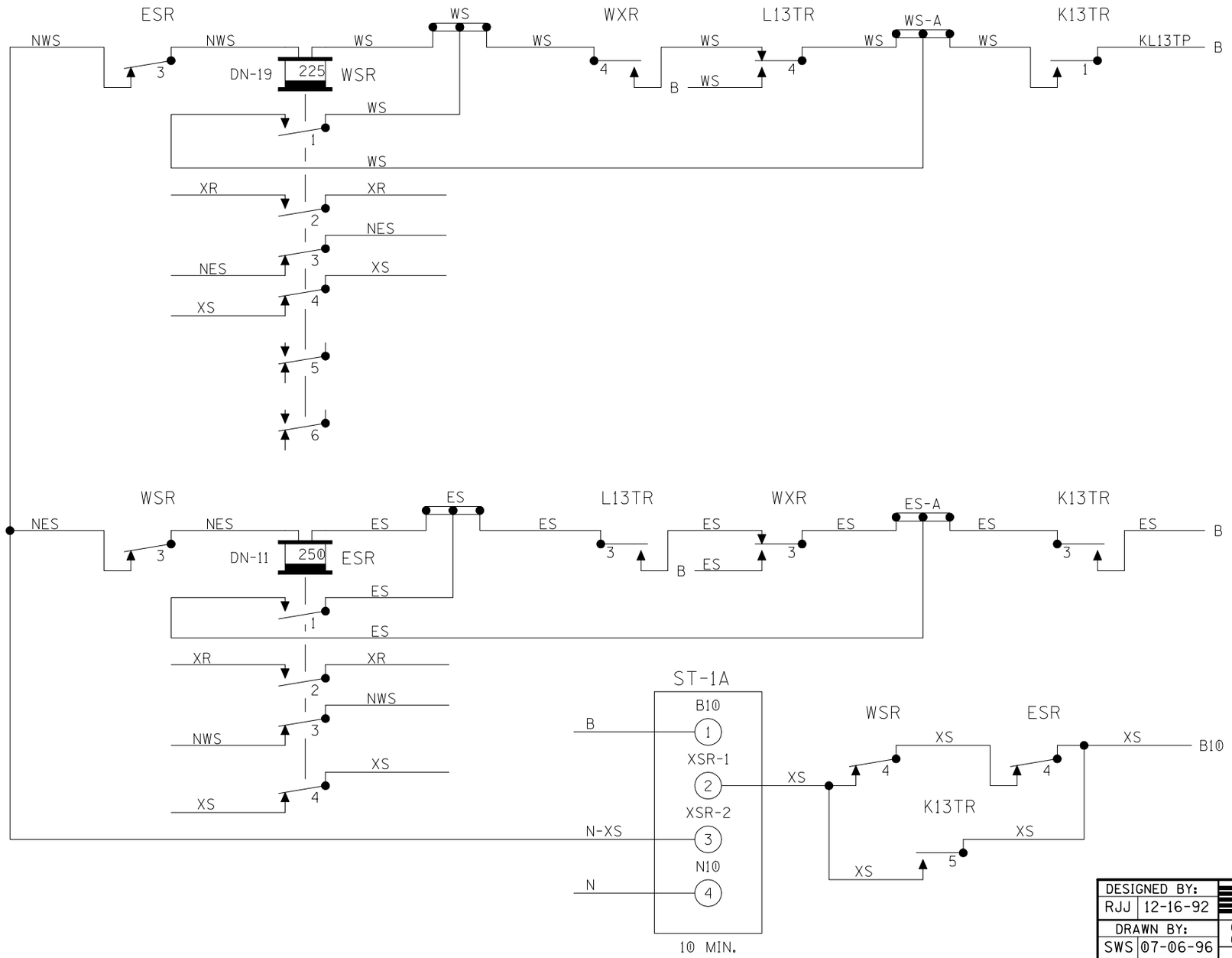

STICK CIRCUITS

DESIGNED BY: RJJ 12-16-92	NORFOLK SOUTHERN		
DRAWN BY: SWS 07-06-96	OFFICE OF ASS'T. VICE PRESIDENT COMM. & SIGNAL, ATLANTA, GA.	M.P.: SP-73.80	
CHECKED BY: - -	BLUFFTON, OHIO FLS at COLLEGE STREET		
IN SERVICE: - -52	LIMA DISTRICT	FILE No. R-	
	CADD or DWG. No. LMPS07380.06	SHEET No. 6 of 10	

REVISION INITIALS

PROPERTY
NORFOLK SOUTHERN RAILWAY CO.

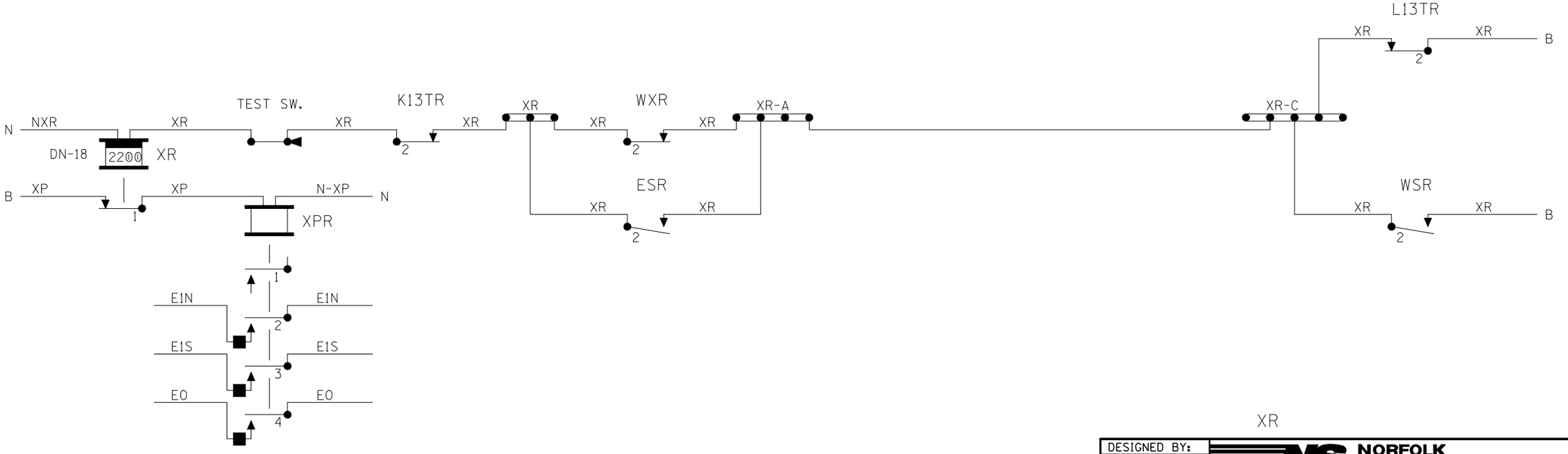

DESIGNED BY: RJJ 12-16-92	NORFOLK SOUTHERN		
DRAWN BY: SWS 07-06-96	OFFICE OF ASS'T. VICE PRESIDENT COMM. & SIGNAL, ATLANTA, GA.	M.P.: SP-73.80	
CHECKED BY: - -	BLUFFTON, OHIO FLS at COLLEGE STREET		
IN SERVICE: - -52	LIMA DISTRICT	FILE No. R-	
	CADD or DWG. No. LMPS07380.07	SHEET No. 7 of 10	

REVISION INITIALS	02-25-97 EGC								

PROPERTY
NORFOLK SOUTHERN RAILWAY CO.

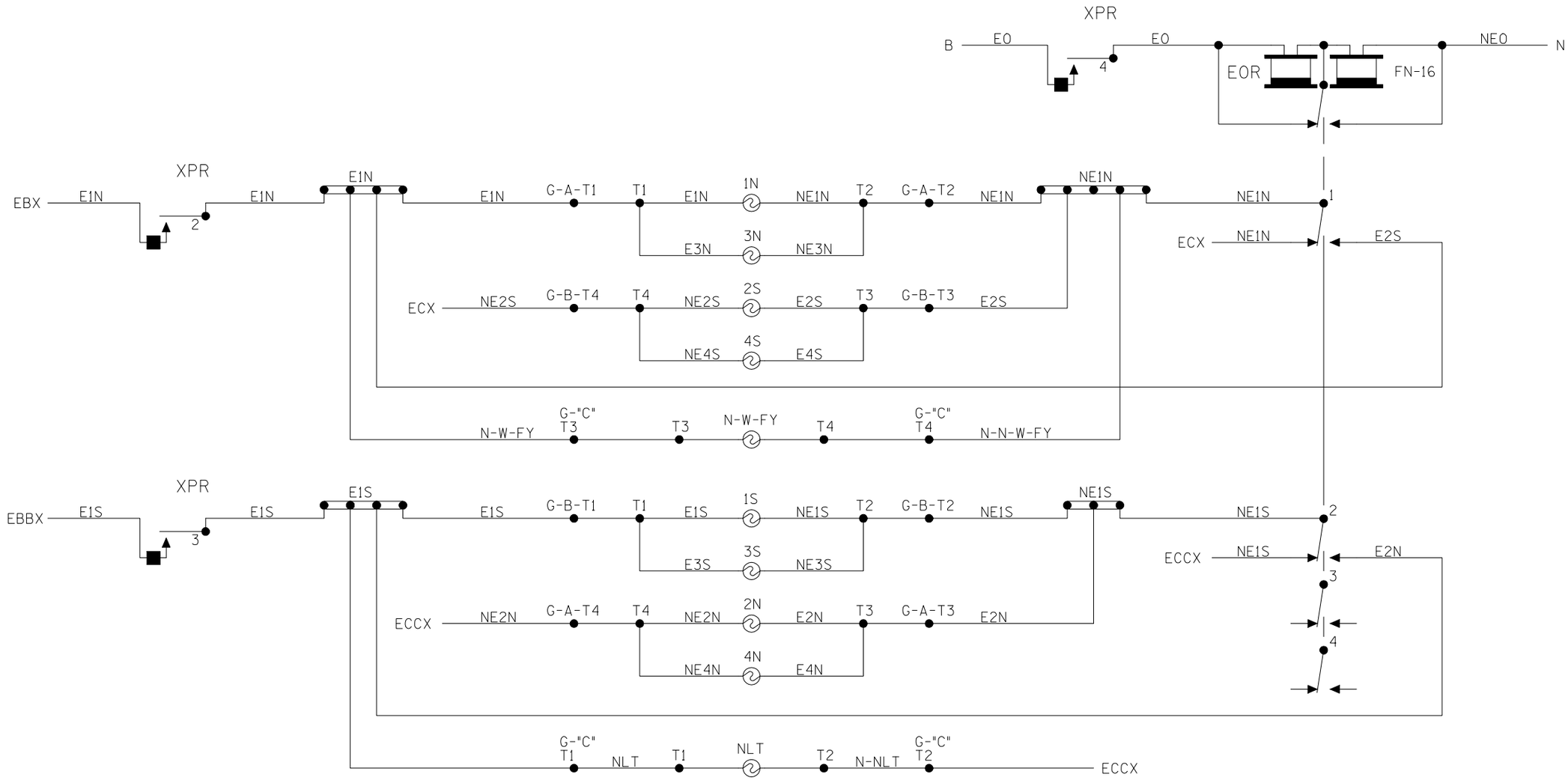

EOR - LIGHTS

DESIGNED BY: RJJ 12-16-92	NORFOLK SOUTHERN		
DRAWN BY: SWS 07-06-96	OFFICE OF ASS'T. VICE PRESIDENT COMM. & SIGNAL, ATLANTA, GA.	M.P.: SP-73.80	
CHECKED BY: - -	BLUFFTON, OHIO FLS at COLLEGE STREET		
IN SERVICE: - -52	LIMA DISTRICT	FILE No. R-	
	CADD or DWG. No. LMPS07380.08	SHEET No. 8 of 10	

REVISION INITIALS										

PROPERTY
NORFOLK SOUTHERN RAILWAY CO.

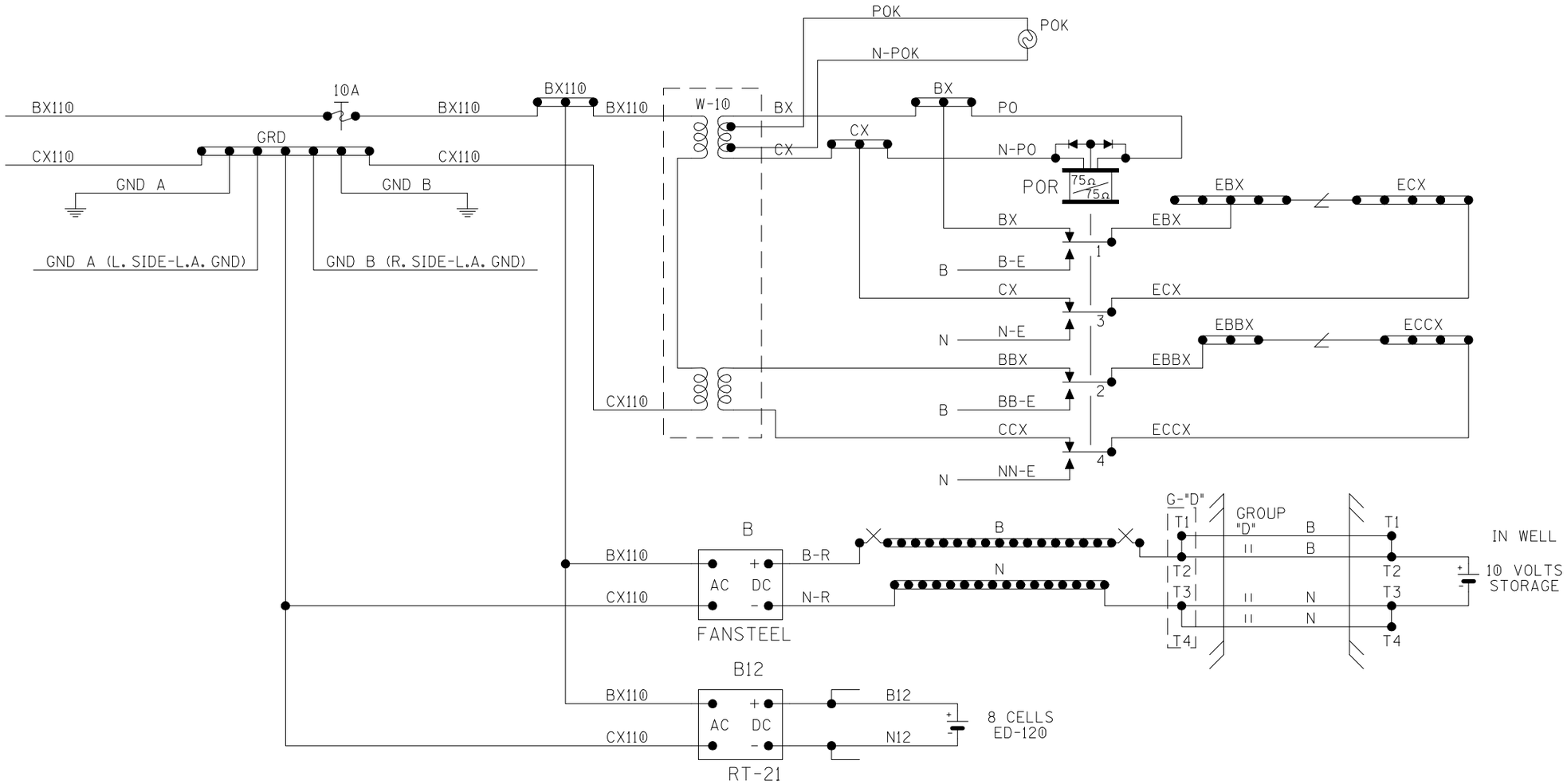

POWER

DESIGNED BY: RJJ 12-16-92	NORFOLK SOUTHERN		
DRAWN BY: SWS 07-06-96	OFFICE OF ASS'T. VICE PRESIDENT COMM. & SIGNAL, ATLANTA, GA.	M.P.: SP-73.80	
CHECKED BY: - -	BLUFFTON, OHIO FLS at COLLEGE STREET		
IN SERVICE: - -52	LIMA DISTRICT	FILE No. R-	
	CADD or DWG. No. LMPS07380.09	SHEET No. 9 of 10	

REVISION INITIALS	02-25-97 EGC								

PROPERTY
NORFOLK SOUTHERN RAILWAY CO.

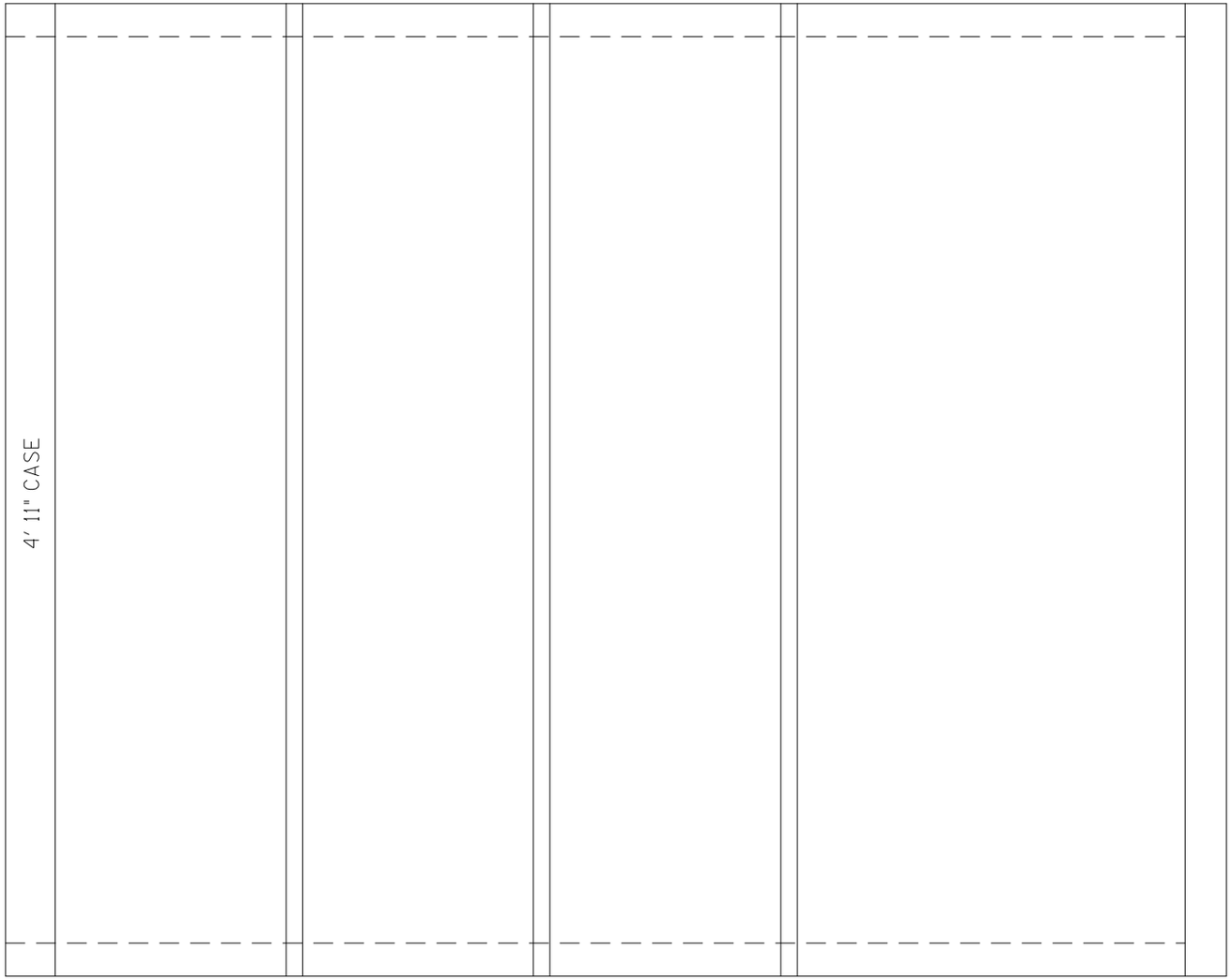

LAYOUT

DESIGNED BY: RJJ 12-16-92	NORFOLK SOUTHERN		
DRAWN BY: SWS 07-06-96	OFFICE OF ASS'T. VICE PRESIDENT COMM. & SIGNAL, ATLANTA, GA.	M.P.: SP-73.80	
CHECKED BY: - -	BLUFFTON, OHIO FLS at COLLEGE STREET		
IN SERVICE: - -52	LIMA DISTRICT	FILE No. R-	
	CADD or DWG. No. LMPS07380.10	SHEET No. 10 of 10	

REVISION INITIALS										

PROPERTY
NORFOLK SOUTHERN RAILWAY CO.

Norfolk Southern Railway Company
Lake Division
Bluffton, Hancock County, OH
ESTIMATE FOR CROSSING IMPROVEMENT (ASPHALT SURFACE)
Co. Rd 15

Existing Crossing
DOT Number: 476869X

1 TRACK(S); 24 CROSSING LENGTH

MATERIAL	QUANTITY	UNIT	UNIT COST	AMOUNT
SURFACE MATERIAL (Rubber Flangeways)	24	TRK. FT.	65.00	1,560
ASPHALT (BY CONTRACTOR)	182	TONS	110.00	20,053
RAIL, 132-LB RE	80	LIN FT.	23.00	1,840
TRANSITION RAIL	4	EA.	1140.00	4,560
INSULATED JOINTS	4	EA.	500.00	2,000
RAIL ANCHORS	171	EA.	1.50	256
SPIKES	2.0	KEG	115.00	230
TIE PLATES	85	EA.	12.00	1,024
CROSSTIES (10')	0	EA.	75.00	0
CROSSTIES (GRADE 5)	43	EA.	55.00	2,347
BALLAST AND GRAVEL	76	TONS	35.00	2,660
GEOTEXTILE	44	LIN FT.	7.00	308
THERMITE WELDS	8	EA.	550.00	4,400
ASPHALT (DISPOSAL)	1	LUMPS	2500.00	2,500
TOTAL (INCLUDES 5% INVENTORY OR TAX ADDITIVES)				48,698
LABOR				
REMOVE EXISTING CROSSING	20	MAN HOURS	25.00	500
REHABILITATE TRK. STRUCTURE	40	MAN HOURS	25.00	1,000
INSTALL NEW CROSSING	30	MAN HOURS	25.00	750
TOTAL				2,250
OTHER ITEMS				
Rail	-1.5	TON	35	(54)
Scrap	-0.5	TON	35	(17)
				(71)
COMPOSITE LABOR ADDITIVE (185.81)				4,181
EQUIPMENT RENTAL & TRANSPORTATION				1,463
PRELIMINARY & CONSTRUCTION ENGINEERING SERVICES AND INVOICE				5,659
TOTAL (TO BE BILLED TO PROJECT SPONSOR)				**$62,180**

ESTIMATE BASED ON TRAFFIC CONTROL AND BARRICADES BEING PROVIDED BY OTHERS, AND FULL CLOSURE OF ROAD. PAVING BY CONTRACTOR.

This estimate is valid for one (1) year after the date of estimate. If work is not performed within this time frame the Railway may revise the estimate to include work not previously deemed necessary.

This estimate shall not be considered as an approval for a temporary crossing. Information provided is an estimation of the anticipated cost for the construction of the crossing only. All temporary construction crossings require a separate approval from Norfolk Southern's General Manager and Division Superintendent, a separate stand alone temporary construction crossing agreement with associated real estate fees, and all required insurances as noted in the in the temporary construction crossing agreement.

OFFICE OF CHIEF ENGINEER, BRIDGES AND STRUCTURES - ATLANTA, GEORGIA
Date: 8/23/2016 File: CX1112084

OHIO RAIL DEVELOPMENT COMMISSION

Mail Stop #3140, 1980 West Broad Street, Columbus OH 43223

John R. Kasich, Governor • James G. Bradley, Chairman

August 12, 2015

Mr. Stephen Klinger
Norfolk Southern Corporation
Administrator Grade Crossing Program
1200 Peachtree St. NE, Box 123
Atlanta, GA 30309

RE: Grade Crossing Warning Device Improvements
Hancock County, TR 15, County Line Rd.
DOT# 476869X; PID# 103464

Dear Mr. Klinger:

A diagnostic review was held at the above grade crossing on 4/29/2016. The crossing has been recommended for the installation of automatic flashing lights and gates.

Norfolk Southern Corporation is authorized to proceed with the site plans and cost estimates (PE) for this project. This authorization is made with the stipulation and understanding that any field work needs prior approval before work begins. This authorization is made with the stipulation and understanding that an approved estimate may contain entries for items or activities that may be cited and found to be ineligible for federal participation during the project audit.

The ORDC is not requesting that the PUCO issue an Order at this time. When the ORDC receives the PE it will be evaluated and a construction-only Order will be requested from PUCO. Please submit the PE to ORDC within 90 days of receipt of this letter.

The diagnostic review form is attached. **Please note that this project includes the removal of a rail joint in the roadway surface along with the replacement of the roadway surface at this crossing location**. Also, please note any other recommendations (page 5), if any, made by the team with regard to requirements for this location. Any minor roadway work necessary for MUTCD compliance should be incorporated into the PE and such costs will flow through the railroad reimbursement process

The ORDC Project Manager for this project is Don Damron. Don can be reached at 614-466-2509 (office), or 614-917-8466 (cell), or don.damron@dot.state.oh.us , if you have any questions.

Sincerely,

Donald J. Damron
Project Manager

C: Randall Schumacher, Supervisor, Rail Division, Transportation Department, PUCO
George Martin, Grade Crossing Planner, PUCO
ORDC (file)

Attachments: Diagnostic Review Team Survey dated 4/29/2016
ORDC/NS Letter Agreement dated 6/10/2016

OHIO RAIL DEVELOPMENT COMMISSION

Ohio Rail Development Commission
Mail Stop 3140, 1980 W. Broad Street,
Columbus, OH 43223

Diagnostic Review Team Survey

Reason for Survey: (e.g. formula, accident, constituent, etc.) PUCO Formula Spring Pick

Date: 4/29/2016

Location Data

Street or Road Name: County Line Road

Route/Road Number (i.e. Twp., Co., SR or US): TR 15

US DOT No.: 476869X

County: HAN

Township:

City: (In or Near) City of Bluffton

Railroad Name: Norfolk Southern

Railroad Division: Lake

Branch/Line Name: Lima Dist.

Nearest RR Timetable Station: Bluffton Lima District

RR Milepost: 73.16

On-Site Review Team

(Include: Name – Organization – Phone Number – Email)

1. Don Damron, ORDC, 614-917-8466; don.damron@dot.ohio.gov
2. Shane Hertel NS 419-889-7028
3. Justin Rall N.S. 419-420-5104
4. George Martin PUCO 614-752-9107
5. Doug Cade Hancock Co. Engineer 419-424-5052
6. James Mehaffie Village of Bluffton 419-358-2066 mehaffie@bluffton-ohio.com
7.
8.
9.

Existing Traffic Control Devices

Type of Warning Devices	Installed?		Quantity/Comments
Advance Warning Signs (condition?)	☑ Yes	☐ No	BOTH DIRECTIONS
'Stop' Signs	☑ Yes	☐ No	STOP SIGNS (2) ON SEP. POSTS
'Stop Ahead' Signs	☐ Yes	☐ No	
Pavement Markings (condition?)	☐ Yes	☑ No	PM - NORTH BOUND - NOT PAINTED
Crossbucks	☑ Yes	☐ No	
Number of Tracks Signs	☐ Yes	☑ No	
Inventory Tags	☑ Yes	☐ No	
Interconnected Highway Traffic Signal	☐ Yes	☑ No	
Mast-Mounted Flashing Lights	☐ Yes	☑ No	
Cantilever Flashing Lights	☐ Yes	☑ No	Number: Length:
Side Lights	☐ Yes	☑ No	
Automatic Gates	☐ Yes	☑ No	Number: Length:
Bells	☐ Yes	☑ No	Number:
Sidewalk Gate Arms	☐ Yes	☑ No	
'No Turn' Signs	☐ Yes	☑ No	
Illumination	☑ Yes	☐ No	
Is crossing flagged by train crew?	☐ Yes	☐ No	
Other	☐ Yes	☐ No	

Safety Data (Obtain crash reports, if possible, prior to review)

	Initial Information (from database)	Revised
Number & dates of crashes in previous 5 years	0 (6/6/95)	
Hazard Ranking	~~1432~~ 1136 Date Run: 3/30/2016	4/15/16

Railroad Data

Railroad Characteristics	Initial Information (from database)	Revised
Total trains per day	2	
< 1 per day		
Day thru trains	2	
Night thru trains		
Daytime switching movements		
Nighttime switching movements		
Total number of tracks	1	
Number of main tracks	1	
Number of other tracks		
Maximum train speed	~~25~~	10 (SP65-LIMA)
Typical train speed	~~25~~	10 SP87
Amtrak		

If non-gated crossing, is clearing sight distance adequate in all quadrants? (See Table 1) ☑ Yes ☐ No

If multiple tracks, can two trains occupy crossing at the same time? ☐ Yes ☑ No

Can one train block the motorists' view of another train at crossing? ☐ Yes (Explain below) ☑ No

Can one or more tracks be eliminated through the crossing? ☐ Yes ☑ No

Are there other track(s) crossing this same roadway within 100 ft of this crossing? ☐ Yes ☑ No

If yes, Crossing DOT #(if different) _____

If yes, distance _____ (take measurement between track centerlines at closest point along roadway)

Roadway Data

Local Highway Authority: City of Bluffton

Roadway Characteristics	Initial Information (from database)	Revised
Average daily traffic	4122 (2015)	1255/1201 (ODOT) 2015
Highway paved	X Yes ☐ No	☐ Yes ☐ No

Roadway Surface: ☑ Blacktop ☐ Gravel ☐ Concrete ☐ Other _____

Roadway width: 22 ft.

Number of highway lanes	2	
Urban or Rural	Urban	
Vehicle Speed: 55 MPH	35	

School Bus Operation: ☐ No X Yes 5 Amount 5 2-AM 2-PM 1 NOON

Hazardous Materials Trucks: ☐ No X Yes 03 Amount

Shoulders: ☑ No ☐ Yes

Is the shoulder surfaced? ☑ No ☐ Yes

Is there existing guardrail along roadway in crossing vicinity? ☑ No ☐ Yes

Is stopping site distance adequate? (See Table 2) ☑ Yes ☐ No If no, deficient approach(es) _____

Quadrant NW Curb and Gutter:	Quadrant SE Curb and Gutter:
☐ Functional (Curb height = 4" or more)	☐ Functional (Curb height = 4" or more)
☐ Non-functional (Curb height = Less than 4")	☐ Non-functional (Curb height = Less than 4")
☑ None	☑ None

Pedestrians: ☐ No ☑ Yes

Is sidewalk present? ☑ No ☐ Yes

Is there a nearby intersection that could cause queuing over the crossing? ☑ No ☐ Yes

If yes,

Distance _____

Is this intersection signalized? ☐ No ☐ Yes

Are the signals currently interconnected with the existing crossing warning devices? ☐ No ☐ Yes

Is there a 'Do not Stop on Track' sign? ☐ No ☐ Yes

Is a roadway improvement project (e.g. widening, turn lanes, nearby new or upgraded traffic signal, sidewalk) planned at or near this location in the foreseeable future? ☐ No ☑ Yes RESURFACE IN NEXT FIVE YEARS

If yes,

Improvement type_____ Lead Agency _____ Timeline/completion - _____

Is it the consensus of the Diagnostic Review Team that this is a potential closure project: ☑ No ☐ Yes

Explain reasons:

Type of Development

☐ Open Space	☐ Institutional	Location of nearby schools:
☑ Industrial	☑ Commercial	BLUFFTON
☐ Residential		CORY RAWSON - NO BUSES

Utility Information

Is commercial power available? ☐ No ☑ Yes

Utility Provider (Company Name) AEP Phone Number _____

Nearest Available Power Source AT - SITE

What other utilities are present? (add locations to sketch) ☑ Gas ☐ Cable ☐ Telephone ☑ Fiber Optic Cable ☐ Petroleum ☑ Water ☐ Sanitary Sewer ☐ Other _____

Is(are) there potential utility conflict(s) ☑ Yes ☐ No ☐ Unknown

Comments:

MULTIPLE U.G. UTILITIES (WATER, GAS, FIBER) LOCATED IN SE QUAD AND WATER LOCATED IN NW QUAD.

Potential Red Flags / Project Challenges

Traffic Signal Preemption (include traffic signal intersection name and LHA with jurisdiction over traffic signal, if known):

NA

Crossing Consolidation or Closure:

NA

Real Estate or ROW:

NA

Culverts / Drainage / Ballast Conditions:

NA

Roadway and/or Sidewalks:

BIKE TRAIL CONNECTION OVER CROSSING
ROADWAY CROSSING SURFACE IS IN POOR CONDITION

Circuitry (e.g. reaches out to other crossings, specific needs, etc.):

POSSIBLE CIRCUIT OVERLAP WITH ADJACENT ACTIVE WARNING DEVICES LOCATED WEST OF XING

Environmental:

NA

Other:

RAIL JOINTS IN ROADWAY SURFACE

Diagnostic Team Recommendations

	Quadrants Needed
☑ Install/upgrade active devices	
☐ Automatic Flashing Lights (AFLS)	
☐ AFLS /Cants	
☑ AFLS / Gates	
☐ AFLS / Gates / Cants	
☑ Bells / number	2 BELLS - IN BOTH QUADS
☐ Upgrade circuitry / type	
☑ Sidelights	* 2 SETS - NEEDED IN NW+SE QUADS
☐ Guardrail Needed	NEEDED IN BOTH QUADS
☐ Install/Replace curb	
☐ Bungalow placement & offset from rail & highway	NO PREFERANCE
☐ Other (define)	

Comments:
RELATIVELY HIGH ADT; UPGRADE WILL ELIMINATE HAZARD
CONSENSUS: UPGRADE TO LIGHTS AND GATE; INSTALL NEW SURFACE.

☐ Install/upgrade traffic signal preemption	
☐ No improvements needed	

☐ Other (define)

Acknowledgement of Recommendations (each entity represented at the diagnostic must have at least one signature acknowledgement):

[signature] [signature] SJR.
[signature] [signature] SEH

Field Dimensions

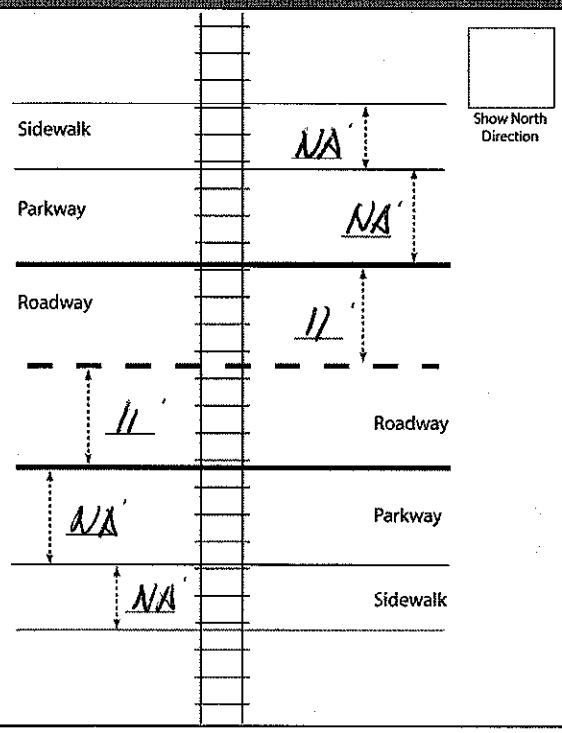

- SURFACE IS IN POOR CONDITION. WILL NEED TO BE REPLACED TO HOLD A GOOD ISLAND CIRCUIT.
- PROJECT TO INCLUDE REPLACEMENT OF ROADWAY CROSSING SURFACE
- SEE ATTACHED CROSSING SURFACE REVIEW FORM.

Field Sketch

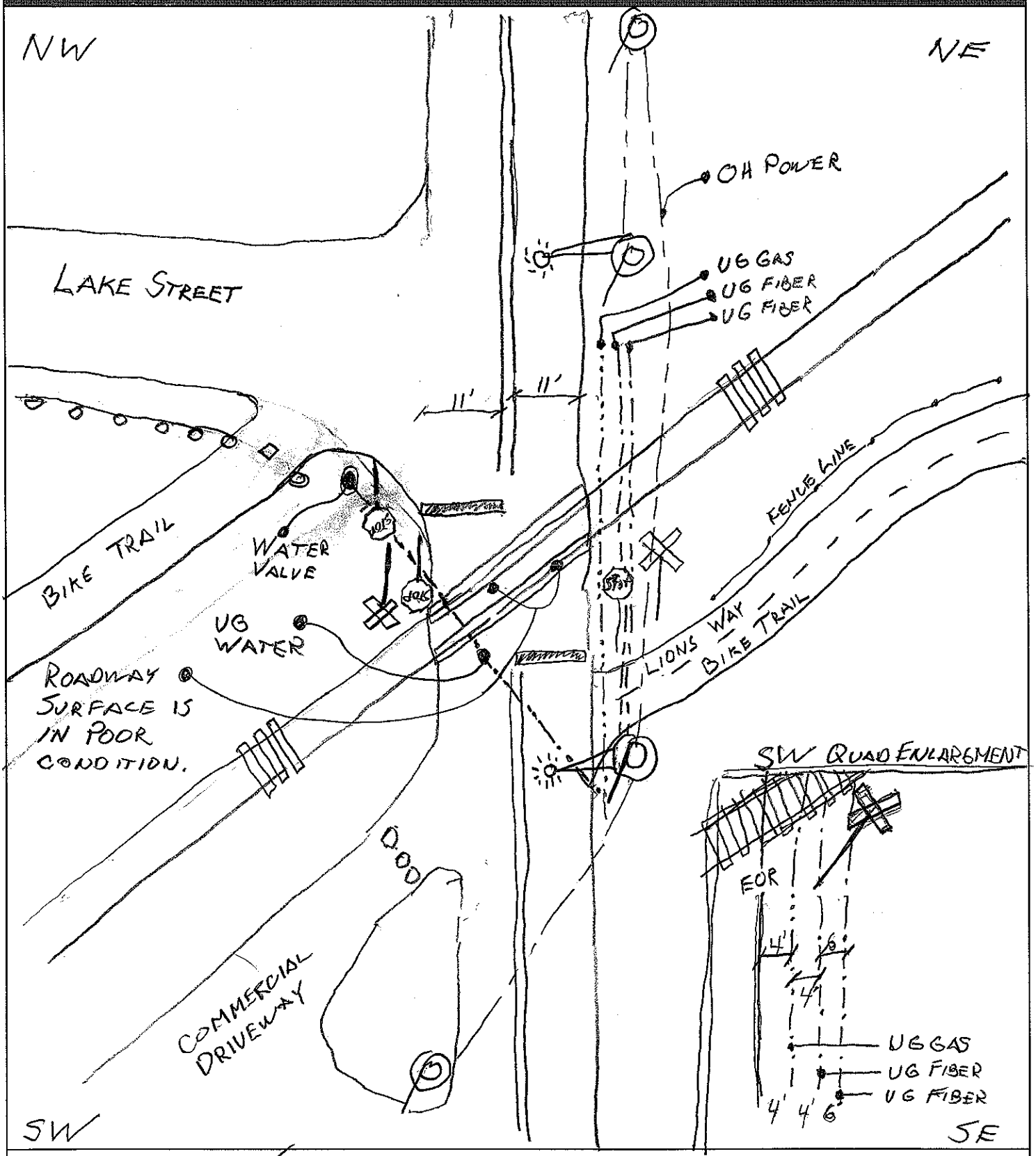

Crossing Angle ☐ 0-29° ☑ 30-59° ☐ 60-90° Measured in _____ Quadrant?

Sketch by: _____

TABLE I

Clearing Sight Distances

Maximum Authorized Train Speed	Distance (dT) Along Railroad from Crossing (ft)
1 - 10	240
15	360
20	480
25	600
30	720
35	840
40	960
45	1080
50	1200
55	1320
60	1440
65	1560
70	1680
75	1800
80	1920
85	2040
90	2160

Source: R-H Grade Crossing Handbook Table 36 (pp. 132-133)

Notes:

All calculated distances are rounded up to the next higher 5-foot increment.

Distances indicated are for 65-ft double bottom semi-tractor trailers and level single track 90 degree crossings; and may need to be adjusted for multiple tracks, skewed crossings or approaches on grades.

Clearing Sight Distance is to be measured in each vehicle travel direction at non-gated crossings as viewed from a point 25 feet from centerline of nearest track in the center of whichever travel lane is nearest the direction along track being measured.

Table 2

Stopping Sight Distances

Highway Vehicle Speed	Distance (dH) Along Roadway from Crossing (ft)
0	n/a
5	50
10	70
15	105
20	135
25	180
30	225
35	280
40	340
45	410
50	490
55	570
60	660
65	760
70	865

Source: R-H Grade Crossing Handbook Table 36 (pp. 132-133)

Notes:

All calculated distances are rounded up to the next higher 5-foot increment.

Distances indicated are for 65-ft double bottom semi-tractor trailers on dry level pavements.

Stopping Sight Distance is to be measured on each roadway approach to crossing from stop bar.

County: HAN Route: TR 15 DOT#: 476869X

Surface type	Condition
☐ Rubber seal and asphalt ☐ Timber and asphalt ☒ Asphalt w/ RUBBER FLANGE ☐ Composite ☐ Concrete panel ☐ Full-depth timber ☐ Full-depth rubber ☐ Other _____	☐ Good ☐ Fair ☒ Poor Comments: ASPHALT SURFACE HAS MULTIPLE PATCHES.

Is the surface good and sufficient? Yes / No

Vehicle type (cars, trucks, etc.):

Surface conditions:

Can vehicles cross at posted speed? ~~NO~~ CROSSING HAS STOP SIGN.

Local observations/driver behaviors: MOST DRIVERS ARE STOPPING AT STOP SIGN

Relevant crash history:

Do existing surface conditions have negative effects on the current or proposed warning devices?
Explain: YES, JOINTS (2) IN RAIL (IN-SIDE) SURFACE AREA ARE MOVING UNDER PUMPING MUD CONDITIONS (ESP. ON EAST SIDE OF ROADWAY)

Comments:

TWO JOINTS INSIDE SURFACE.
RUBBER FLANGE IS FAILING.
SURFACE SHOULD BE REPLACED.

Form completed by: DTD Date: 5-4-16

HAN – County Line Road/TR 15 – DOT # 476869X

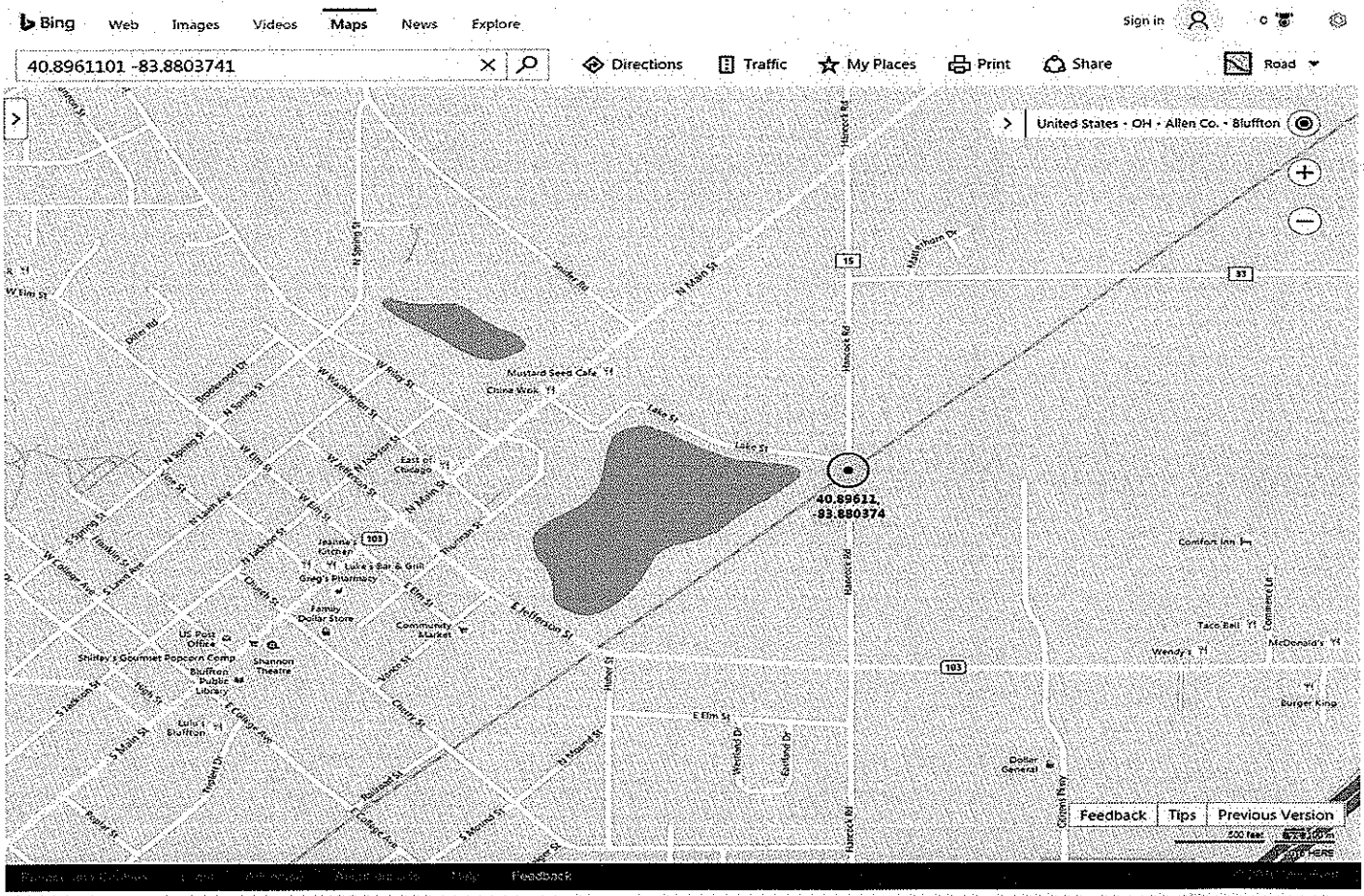

The following is offered as a summary for the crossing conditions at N/S Crossing 476869X.

- Crossing Location: Hancock County Line Road
  - Latitude: 40.8961101
  - Longitude: -83.8803741
- Average Adjusted Daily Traffic (2015) reflects 4,122 vehicles per day.
- Highway speed = 55 MPH
- Roadway width = 22'
- Trains per day = 2 daytime in August 2015 (1 local and 1 grain)
- Train Speed = 40 MPH
- Train Tracks = 1
- Crossing Angle = 39^0
- The speed limit is not posted for southbound traffic; it is posted at 35 MPH for northbound traffic.
- There was one injury crash in 2008 at this crossing; however, it did not involve a train.
- Field surveys conducted by this office August 2015 found:
  - Advance warning signs present and in good condition.
  - No advance warning pavement markings for northbound traffic; however, they were present and in good condition for southbound traffic.
  - Stop bars and centerlines present and in good condition.
  - The emergency notification placards present at the crossing; but in poor condition.
  - The condition of the crossing considered to be in fair condition.
  - Advance Warning Sign and Markings Good at 600' (SB); Sign only at 600' (NB).
- Sight distance considered inadequate in 2 quadrants due to structure, trees and vegetation.
  - Limited to 185' in NW quadrant and 240' in SW quadrant.
- The following recommendations are offered to improve the safety of the crossing:
  - Post 35 MPH speed limit sign for southbound traffic.
  - Install advance pavement markings on northbound approach.
  - Install stop bars.
  - Install emergency placards.
  - Install W10-3 advance warning signs on both approaches of bike paths and Lake Drive.
  - Consider upgrading to an active warning system of flashing signals and gates.

School Bus Traffic at N/S Crossing 476869X:

Bluffton School District: Two (2) crossings each morning

One (1) crossing around Noon

Two (2) crossings each afternoon

Cory-Rawson School District: Until this year- two (2) crossings each day

- Changed route this year
- May be utilized in future years/routes

Allen County DD: Did not respond

Trinity Lutheran School: Did not respond

This foregoing document was electronically filed with the Public Utilities

Commission of Ohio Docketing Information System on

1/12/2017 10:54:56 AM

in

Case No(s). 17-0109-RR-FED

Summary: Application In the Matter of a Request for the Installation of Active Warning Devices at the Norfolk Southern Railway Crossing at County Line Road/CR 15, DOT# 476-869X, in Hancock County, Ohio. electronically filed by Mrs. Jill A Henry on behalf of PUCO/Rail Division