FILE

10-2786-RR-FED

WHEELING & LAKE ERIE RAILWAY COMPANY

Dan Reinsel
Signal & Communication Supervisor

100 East First Street
Brewster, OH 44613

Tel. 330-767-7202 **dreinsel@wlerwy.com** **Fax: 330-767-3213**

Dear PUCO Docketing Division:

The materials included with this cover letter as submitted to your office as per the instructions within the Stipulation for the installation of the identified crossing warning device installation.

Thank you,

Dan Reinsel

Dan Reinsel

(4 Projects)

RECEIVED-DOCKETING DIV
2011 APR -4 PM 3:50
PUCO

This is to certify that the images appearing are an accurate and complete reproduction of a case file document delivered in the regular course of business.
Technician M Date Processed APR 0 4 2011

10-2786-RR-FED

WHEELING & LAKE ERIE RAILWAY COMPANY

Dan Reinsel
Signal & Communication Supervisor

100 East First Street
Brewster, OH 44613

Tel. 330-767-7202 **dreinsel@wlerwy.com** **Fax: 330-767-3213**

28 March 2011

Ohio Rail Development Commission
Mr. Mike Forte
1980 West Broad Street, Room 2B
Columbus, OH 43223

Re: Estimate for Railroad Crossing Warning System at SR 82, Aurora Rd. DOT 472-689L

Dear Mr. Forte,

I am providing this estimate for the crossing package and installation at Aurora Rd. Award of the material package will be the result of a competitive bid; copies of the submitted quotes will be forwarded to your office when they are completed. Installation will be preformed under our continuing construction agreement with CTC LLC.

CTC Managed Services & Package Installation	$31,526.07
RSS Supplied Package	$77,375.15
Fill Materials	$4,000.00
Fill Material Transport	$1,400.00
Two Gate Foundations (note 1)	$1,377.00
Site Preparation (foundations, bores)	$19,000.00
Electric Service	$3,500.00
Cutout relay (note 2)	$1,245.00
Insulated Joints + Installation + Cutover	$27,803.61
Estimated Total	$167,226.83

Please contact me if additional details are required.

Respectfully,

Dan Reinsel

Dan Reinsel

Notes
1: Direct purchase from Fabricated Metals, 60' galvanized gate foundation, $459 ea.
2. Cutout relay missed on original material list, includes support bracket and wiring.

c: PUCO, Jill Henry
PUCO, George Martin

Wheeling & Lake Erie Railway Co.
Twinsburg, Ohio - Aurora Rd (SR82) DOT# 472 689L
Project Estimate - CT10171

ENGINEERING					
Description	Qty	UOM	Unit Price		Amount
SIGNAL DESIGNER	40	HR	31.25		$1,250.00
SIGNAL CHECKER, LEVEL 1	4	HR	36.06		$144.24
SIGNAL CHECKER, LEVEL 2/FIELD ENGINEER		HR	36.06		$0.00
SUBTOTAL					$1,394.24
G&A BURDEN FOR LABOR					$2,551.46
FIXED FEE					$394.57
ENGINEERING TOTAL					$4,340.27

PROJECT MANAGEMENT					
Description	Qty	UOM	Unit Price		Amount
SENIOR SIGNAL ENGINEER	12	HR	$72.11		$865.32
PROJECT MANAGER	24	HR	$31.25		$750.00
CONSTRUCTION MANAGER	24	HR	$36.06		$865.44
ACCOUNTING, LEVEL1	16	HR	$39.81		$636.96
ADMINISTRATIVE	4	HR	$25.48		$101.92
SUBTOTAL					$3,219.64
G&A BURDEN FOR LABOR					$5,891.94
FIXED FEE					$911.16
PROJECT MANAGEMENT TOTAL					$10,022.74

CONSTRUCTION LABOR					
Description	Qty	UOM	Unit Price		Amount
SIGNAL FOREMAN	60	HR	$28.50		$1,710.00
SIGNALMAN	60	HR	$19.50		$1,170.00
SIGNAL HELPER	60	HR	$19.00		$1,140.00
SUBTOTAL					$4,020.00
G&A BURDEN FOR LABOR					$7,356.60
FIXED FEE					$1,137.66
CONSTRUCTION LABOR TOTAL					$12,514.26

CONSTRUCTION LABOR EXPENSES					
Description	Qty	UOM	Unit Price		Amount
EMPLOYEE MEALS (PER DIEM)	19	EA	$30.00		$570.00
EMPLOYEE TRAVEL & LODGING	16	EA	$60.00		$960.00
SUBTOTAL					$1,530.00
CONSTRUCTION LABOR EXPENSES TOTAL					$1,530.00

Wheeling & Lake Erie Railway Co.
Twinsburg, Ohio - Aurora Rd (SR82) DOT# 472 689L
Project Estimate - CT10171

CONSTRUCTION EQUIPMENT					
Description	Qty	UOM	Unit Price		Amount
TRUCK, PU, 1 TON CREW CAB	60	HR	$11.78		$706.80
TRUCK, BOOM, ART, TELESCOPING	20	HR	$55.95		$1,119.00
TRAILER, UTILITY, 4 TIRE, 12,000lbs SC410	60	HR	$7.55		$453.00
RENTAL EQUIPMENT (FORK LIFT/BACKHOE/SKYTRAK)	1	WK	$690.00		$690.00
EQUIPMENT DELIVERY/PICKUP	1	LS	$150.00		$150.00
SUBTOTAL					$3,118.80
CONSTRUCTION EQUIPMENT TOTAL					$3,118.80

MATERIAL					
Description	Qty	UOM	Unit Price		Amount
HOUSE MATERIAL (SEE ATTACHED DETAIL)	1	LS			$33,948.05
FIELD MATERIAL(SEE ATTACHED DETAIL)	1	LS			$31,927.10
HOUSE AND SIGNAL WIRING	1	LS			$7,500.00
FILL DIRT		TN	$7.50		$0.00
CONCRETE		YD	$500.00		$0.00
COVER ROCK		TN	$26.50		$0.00
BORING 4"		FT	$35.00		$0.00
ELECTRICAL PERMITS		EA	$3,500.00		$0.00
METER POLE ASSY AND INSTALLATION		EA	$2,500.00		$0.00
FREIGHT & CONTAINER PRICE	1	LS			$4,000.00
SUBTOTAL					$77,375.15
MATERIAL TOTAL					$77,375.15

TOTAL PROJECT ESTIMATE	$108,901.22

HOUSE MATERIALS					
Description	QTY	UOM	MANUFACTURER PN	Unit Price	Total Price
HOUSE 6X6 AL WLE W/2-23" RKS	1	EA	PTMW	$8,500.00	$8,500.00
ASSY TSA-1A W/TTA3 ARRESTORS	4	EA	250787-000	$134.00	$536.00
EPC TD-4 TRACK DRIVER	1	EA	800-081033-100	$712.00	$712.00
RECTIFIER 5/5 CRAGG 5LA-N1	1	EA	5LA-N1	$348.00	$348.00
CHARGER 40A 12V CRAGG 40ETC12V	2	EA	017061-203	$673.27	$1,346.53
RECTIFIER POWER CORD 14/4 SJE BLK	70	FT		$1.00	$70.00
BATTERY GNB 150AH	1	EA		$500.00	$500.00
BATTERY NICAD 250 AH SPL-250	19	EA		$290.00	$5,510.00
TRAY BATTERY 12 X 27" POLYETHYLE	4	EA	7438-01	$32.96	$131.82
THERMOSTAT SPDT REMOTE BULB 8A	1	EA	009186-004	$73.94	$73.94
RLY DPDT 12VDC 5A OCT	4	EA	007192-032	$13.22	$52.89
SCKT RLY 8-PIN OCT SCREW PNLMT	4	EA	132246-001	$4.48	$17.91
POWER OFF LIGHT KIT	1	EA		$116.40	$116.40
NUT INSULATED HARMON	20	EA	013986-000	$2.97	$59.40
SSCCIII PLUS 40 AMP 19" BASE	1	EA	91190-0101	$5,628.00	$5,628.00
PANEL LTG SURGE SSCC 91170-01	1	EA	201756-015	$608.75	$608.75
MICRO DATA ANALYZER II WLE PK	1	EA	072113-100	$3,450.00	$3,450.00
MDA CURRENT SENSOR	2	EA		$220.00	$440.00
BATTERY GROUND DETECTOR	1	EA	NAS	$1,250.00	$1,250.00
RELAY 4 OHM 6FB NEUTRAL	3	EA	ST1 400010	$870.00	$2,610.00
RELAY PLUGBOARD B1 W/10-14 CRIMP TERMINALS	3	EA		$203.00	$609.00
WIRE 16AWG/19 TC EPR/PVC BLU	300	FT	012092-002	$0.22	$66.00
WIRE 10AWG/19 TC EPR/PVC BLU	350	FT	012092-000	$0.62	$215.60
WIRE 6AWG/19THHN BLK	50	FT	012253-000	$0.79	$39.60
WIRE 6AWG/19 THHN RED	50	FT	012253-003	$0.84	$41.80
WIRE 6AWG/19 THHN GRN	30	FT	012253-002	$0.75	$22.44
CABLE RAW 3/14AWG PWR 300V	30	FT	012690-010	$0.77	$23.10
RES ADJ WW 15W 10 OHM	2	EA		$30.00	$60.00
RES ADJ WW 15W 5.69 OHM PNLMNT	5	EA	002238-101	$26.09	$130.46
CONN PLUG L6-15 250V 15A 2P3W	3	EA	132286-001	$11.53	$34.58
ASSY 2WAY TERM BLK W/AAR HARD	6	EA	202810-000	$15.82	$94.91
ASSEMBLY, 4 POST TERMINALBLOCK	4	EA	203032-000	$43.48	$173.93
ASSY TERM STRIP DBL POST 12	2	EA	250094-300	$19.77	$39.53
GROUND POST P5-162	4	EA	113047-000	$25.94	$103.75
WRENCH AAR TERMINAL	1	EA	095058-001	$15.28	$15.28
LABEL, DANGER 240 V, 1.75 X 2.	1	EA	SQS109	$3.86	$3.86
NOTIFICATION SIGN HSE	1	EA	HSE SIGN	$312.55	$312.55

FIELD MATERIALS					
Description	QTY	UOM	MANUFACTURER PN	Unit Price	Total Price
KIT TORQUE WRENCH S/T 070981X	1	EA	2587-01	$256.38	$256.38
SO CORD 10/3	60	FT		$0.90	$54.00
GATE ARM 16-32' UHI LED LGHTS	2	EA	076045-014	$613.73	$1,227.47
SLEEVE 4 ALUMINUM REC #92958	2	EA	14187-01	$44.33	$88.66
DECAL, DOT STRIP	2	EA		$16.00	$32.00
ASSY WLE STANDARD FLASHER/GATE W/O ARM, GATE ARM LIGHTS, GATE KEEPER	2	ASSY	CTC	$12,000.00	$24,000.00
TAPE MARKER BURIED RR CABLE	1	EA	029989-000	$21.43	$21.43
CABLE UG 7 COND #6 AWG SOLID	300	FT	1077-02	$6.29	$1,887.80
CABLE UG 7 COND #14 AWG SOLID	300	FT	1023-02	$2.22	$666.60
WIRE UG TRK #6 AWG DUPLEX	400	FT	1094-02	$1.46	$585.20
PVC CEMENT, 1QT W/BRUSH TOP	1	EA		$7.15	$7.15
GRINDING WHEEL 6IN X 1IN	4	EA		$30.00	$120.00
BOOTLEG KIT/1 PR TRACKWIRE WLE STANDARD	4	EA	D&W SB7100090	$42.10	$168.40
BOND JOINT 5/16" X 7" TAB ERICO #SB-	200	EA	2161-01	$5.41	$1,082.40
WIRE #6 SOFT BARE COPPER	30	FT	1436-01	$0.40	$11.88
CARTRIDGE SB25 POWDER W/ATTACHMETAL FOR	200	EA	1026-39	$1.55	$310.20
ROD 5/8 X 8 NS GRD***USE-02***	6	EA	1357-01	$14.72	$88.31
CONNECTION SBNT1-161G ONE-SHOTFOR 5/8 IN	6	EA	1029-01	$6.17	$37.03
CADWELD TYPE GR 5/8GRDX#6WIRE	6	EA	005755-002	$7.10	$42.57
BOND STRAND 8-STR 3/16" TINNEDSBS8TINSUL	100	FT	4133-01	$1.21	$121.00
TRACK RECTIFIER, RING-10	2	EA	800-004080-000	$119.00	$238.00
PLATE SHUNT 24"X26"X1/4" GALV.	2	EA	6193-01	$67.06	$134.11
SCREW LAG 3/4" X 6" BLACK GRIMLET PO	8	EA	2000-01	$0.81	$6.51
TAPE ELECTRICAL 3M #33+ 3/4" PLASTIC	2	RL	1190-01	$3.62	$7.24
DUCTSEAL 1LB BLOCK	10	EA		$3.30	$33.00
FOAM INSULATING SPRAY	4	EA		$12.25	$49.00
STAPLE GROUND WIRE 1-1/16"X3"	50	EA	113005-000	$0.32	$15.95
TIE CABLE .184 X 7.31" HIG TEMSELF LOCKI	100	EA	4125-01	$0.04	$4.40
LUG RNG 1/4" 12-10AWG INS BLK	100	EA	032114-008	$0.01	$1.10
TAG ST-5 SNAPOUT 11 TAGS/CARD MI# 010301	50	EA	2090-01	$2.28	$113.85
STAPLE COPPERWELD 3/8 X 1-3/4 144 IN. RO	50	EA	1148-01	$0.26	$13.20
GREASE RUST PREVENTIVE NO OXID"A SPECIAL	1	EA	1906-01	$9.83	$9.83
SLEEVE NICO 3/16"-#6 AWG REDUC#2363-J	20	EA	1145-01	$0.89	$17.82
CLIP TRACK WIRE RETAINER - ERICO #SBA	12	EA	1118-01	$1.97	$23.63
COMPOUND DUCT SEAL 5 LB PLUG PERMAGUM #	5	PK	1179-01	$10.68	$53.41
LOCK MASTER	4	EA	MLCK	$28.41	$113.65
EMERGENCY SIGN SIGNAL	1	EA	SIG SIGN	$113.65	$113.65
FIELD TAG KIT	1	EA	FLDTGKT	$170.48	$170.48

WHEELING & LAKE ERIE RAILWAY COMPANY

Estimate for installation of 8 insulated joints and crossing cutover

Materials, Labor, and Purchased Services	
DOT #	**472-689-L**
Mile Post	Q-20.9
Subdivision	Cleveland
City / Township	Twinsburg
Road Name	Aurora Rd.
Materials (see page 2):	17,085.60
Labor (see page 3):	4,551.43
Equipment (see page 4):	2,830.00
Purchased Services (see page 4):	0.00
Accounting (2% of Labor):	91.03
Contingencies (15% of Material & Labor):	3,245.55
TOTAL	$27,803.61

TRACK MATERIALS:

Track Material Description	No. of Units	Price Per Unit	Total Amount
Insulated Bonded Rail Section, 110RE	8.00	$1,825.00	14,600.00
Rail cutting wheel 16"	16.00	$38.00	608.00
115# Weld Kit	16.00	115.00	1,840.00
Cutting Wheels	2.00	18.80	37.60
TOTAL			$17,085.60

LABOR: Description	No. of Men	No. of Days	No. of Hours	Hourly Rate	Total Amount
Track Supervisor	0.0	0.0	0.00	$33.50	0.00
Track Foreman	1.0	2.0	16.00	$15.38	246.08
B&B Foreman	0.0	0.0	0.00	$15.38	0.00
B&B Mechanic/Journeyman	0.0	0.0	0.00	$14.44	0.00
Welder	1.0	6.0	48.00	$14.44	693.12
Welder Helper	1.0	6.0	48.00	$14.08	675.84
Backhoe Operator Class A	0.0	0.0	0.00	$14.44	0.00
Tamper Operator Class A	0.0	0.0	0.00	$14.44	0.00
Regulator Operator Class A	0.0	0.0	0.00	$14.44	0.00
Prentice Truck Operator, Class A	0.0	0.0	0.00	$14.44	0.00
Prentice Truck, Assist. Operator Clas:	0.0	0.0	0.00	$14.44	0.00
Ohio Crane Operator Class A	1.0	0.5	5.00	$14.44	72.20
Ohio Crane Assist. Operator Class A	1.0	0.5	5.00	$14.44	72.20
Track Laborer	2.0	2.0	32.00	$12.00	384.00
Signal Supervisor	0.0	0.0	0.00	$33.50	0.00
Signal Foreman	0.0	0.0	0.00	$19.32	0.00
System Signal Technician	1.0	3.0	24.00	$18.20	436.80
S&C Technician	0.0	0.0	0.00	$16.75	0.00
Laborer, S&C Dept.	0.0	0.0	0.00	$10.85	0.00
SUB TOTAL OF LABOR					2,580.24
Additives & Benefits on Labor	74.12%				1,912.47
Per Diem, Signal Rate 1		0.0		$30.64	0.00
Per Diem, Signal Rate 2		0.0		$22.98	0.00
Per Diem, Signal Rate 3		0.0		$15.35	0.00
Per Diem, Signal Meal Allowance		0.0		$10.22	0.00
Per Diem Track		1.0		$58.72	58.72
Flagger (up to 8 hours)		0.0		$500.00	0.00
Flagger (over 8 hours)		0.0		$650.00	0.00
Flagger (weekend)		0.0		$800.00	0.00
TOTAL LABOR:					$4,551.43

EQUIPMENT: Description	No. of Days	Price Per 10 Hr Day	Total Amount
Section Hyrail Boom Truck $35 hr	2.00	$350.00	700.00
B&B Hyrail Boom Truck $35 hr	0.00	$350.00	0.00
Welder Truck $23 hr	6.00	$230.00	1,380.00
Hyrail Dump Truck $20 hr	0.00	$200.00	0.00
Backhoe $22 hr	0.00	$220.00	0.00
Ohio Crane, locomotive $40	0.50	$400.00	200.00
Tamper $105 hr	0.00	$1,050.00	0.00
Prentice Truck $35 hr	0.00	$350.00	0.00
Regulator $35 hr	0.00	$350.00	0.00
Rail Drill $5 hr	2.00	$50.00	100.00
Rail Saw $5 hr	6.00	$50.00	300.00
Air Compressor $5 hr	0.00	$50.00	0.00
Lowboy Trailer $13 hr	0.00	$130.00	0.00
Sig. Bucket Truck $26.80 hr	0.00	$268.00	0.00
Sig. Maintainers Truck 3/4 ton (Hi-Rail) $7.30 hr	0.00	$73.00	0.00
Sig. Maintainers Truck (Pickup) $5 hr	3.00	$50.00	150.00
Supervisor Pickup $5 hr	0.00	$50.00	0.00
Hi rail pickup crew cab $11.80 hr	0.00	$118.00	0.00
TOTAL EQUIPMENT			$2,830.00

PURCHASED SERVICES: Description (American Demolition Apr. 2009)	No. of Hours	Price Per Hour	Total Amount
Haul & Dispose of Debris	0.00	$65.00	0.00
Haul Dump Truck (in or out no disposal)	0.00	$55.00	0.00
Haul Quad Truck	0.00	$75.00	0.00
Hyrail Dump Truck	0.00	$100.00	0.00
Loader w/Operator	0.00	$85.00	0.00
Mobilization/Trailer Time	0.00	$75.00	0.00
TOTAL PURCHASED SERVICES			$0.00

DWG. NO.	DESCRIPTION
00	INDEX
01	SITE LAYOUT
02	CROSSING CONTROL CIRCUITS
03	RELAYS
04	RECORDER
05	BGD
06	SSCC PLUS
07	1LSP
08	CTP
09	GATE #1 MECHANISM (NEAR SIDE)
10	GATE #1 LIGHTS (NEAR SIDE)
11	GATE #2 MECHANISM (FAR SIDE)
12	GATE #2 LIGHTS (FAR SIDE)
13	BATTERY CHARGER
14	AC POWER DISTRIBUTION
15	RACK FRONT VIEW
16	RACK BACK VIEW
17	SIDE "A"
18	SIDE "C"

REV.	GENERAL NOTES

THE OPERATION OF THE CIRCUITS AND EQUIPMENT REPRESENTED HEREIN CANNOT BE FULLY CHECKED UNTIL ALL CIRCUITS AND DEVICES ARE CONNECTED TO FORM A COMPLETE SYSTEM, OR AN EFFECTIVE SUBSYSTEM. SUCH SYSTEM OR SUBSYSTEM MUST BE GIVEN COMPLETE CIRCUIT AND OPERATIONAL TESTS BEFORE BEING PLACED IN REGULAR OPERATION.

REVISION BLOCK

CHANGE FROM TYPICAL Y

W&LE

Wheeling & Lake Erie Railway

LOCATION: AURORA ROAD/STATE ROUTE 82
TWINSBURG, OH

ORIGINAL DATE	12/1/2010	TITLE	INDEX		
DESIGNER	CTC	SUB	CLEVELAND	CTC NO.	CT10171
DRAFTSMAN	CTC	MILEP	0030.90	SCALE	N.T.S.
CHECKER	CTC	DOT NO.	472 669L	SHEET	00 of 18

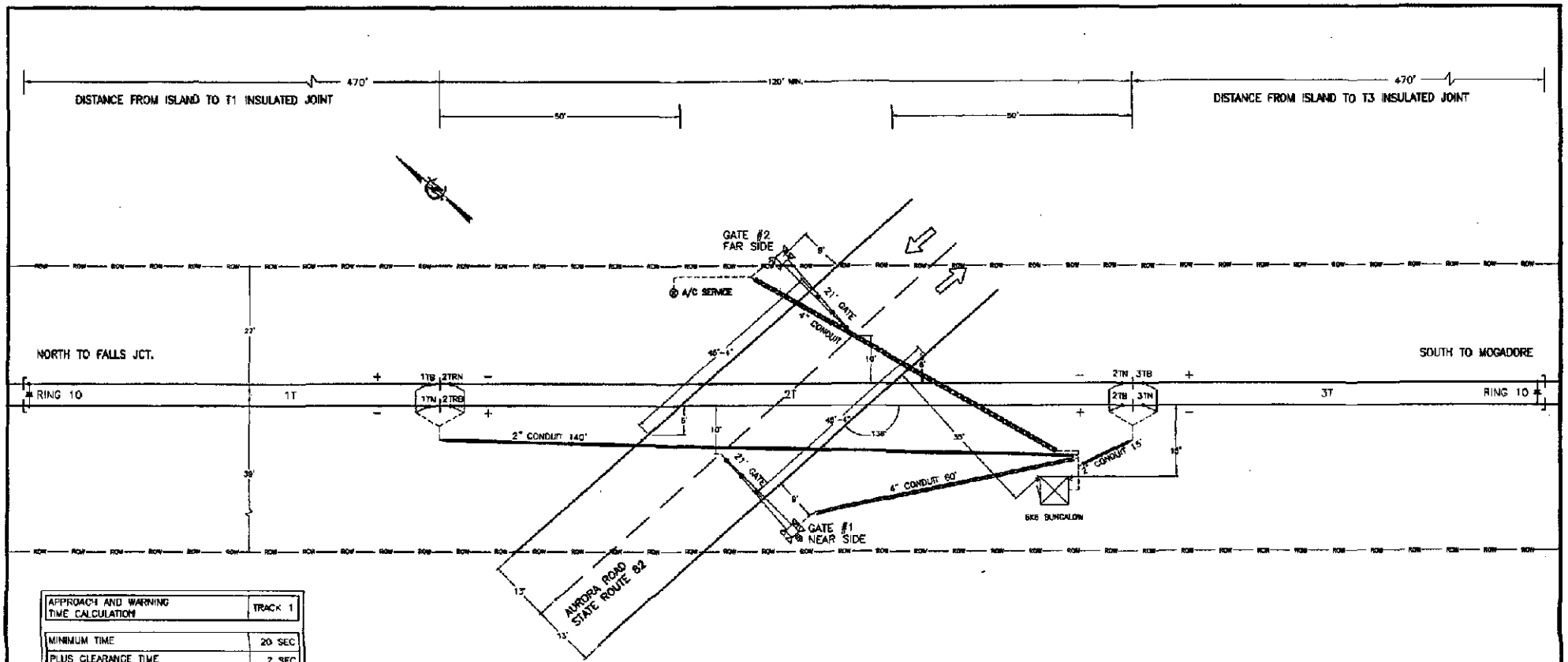

APPROACH AND WARNING TIME CALCULATION	TRACK 1
MINIMUM TIME	20 SEC
PLUS CLEARANCE TIME	2 SEC
MINIMUM WARNING TIME (MWT)	22 SEC
PLUS BUFFER TIME	5 SEC
TOTAL WARNING TIME (TWT)	27 SEC
PLUS EQUIPMENT RESPONSE TIME	5 SEC
PLUS ADVANCE PREEMPT TIME	NA SEC
TOTAL APPROACH TIME (TAT)	32 SEC
MAXIMUM TRAIN SPEED	10 MPH
TIMES RATION OF FT/SEC TO MPH	1.4667
TOTAL (MINIMUM) APPROACH DISTANCE	470 FT

UNDERGROUND UTILITIES
TWO WORKING DAYS
BEFORE YOU DIG
CALL 1-800-362-2761 (TOLL FREE)
OHIO UTILITIES PROTECTION SERVICE
NON-MEMBERS
MUST BE CALLED DIRECTLY

REVISION BLOCK

W&LE

Wheeling & Lake Erie Railway

LOCATION: AURORA ROAD/STATE ROUTE 82, TWINSBURG, OH

ORIGINAL DATE 12/1/2010	TITLE SITE LAYOUT		
DESIGNED CTC	SUB CLEVELAND	CTC NO CT10171	
DRAFTSMAN CTC	Group C020.90	SCALE N.T.S.	
CHECKED CTC	SOV NO. 472 689L	SHEET 01 of 18	

CONSTRUCTION NOTES

1) REMOVE EXISTING FLASHERS AND CASE
2) PROPOSED SITE ADDRESS IS
LAT: 41.3037732 LONG: -81.4182206
3) NEW METER SERVICE REQUIRED. SERVICE PROVIDER IS FIRST ENERGY ELECTRIC

REVISION BLOCK										

W&LE

Wheeling & Lake Erie Railway

LOCATION: AURORA ROAD/STATE ROUTE 82
TWINSBURG, OH

ORIGINAL DATE	12/1/2010	TITLE	SITE LAYOUT NOTES		
DESIGNER	CTC	DIV	CLEVELAND	CTC NO.	CT10171
DRAFTSMAN	CTC	GROUP	Q020.90	SCALE	N.T.S.
CHECKER	CTC	BOM NO	472 689L	SHEET	010 OF 18

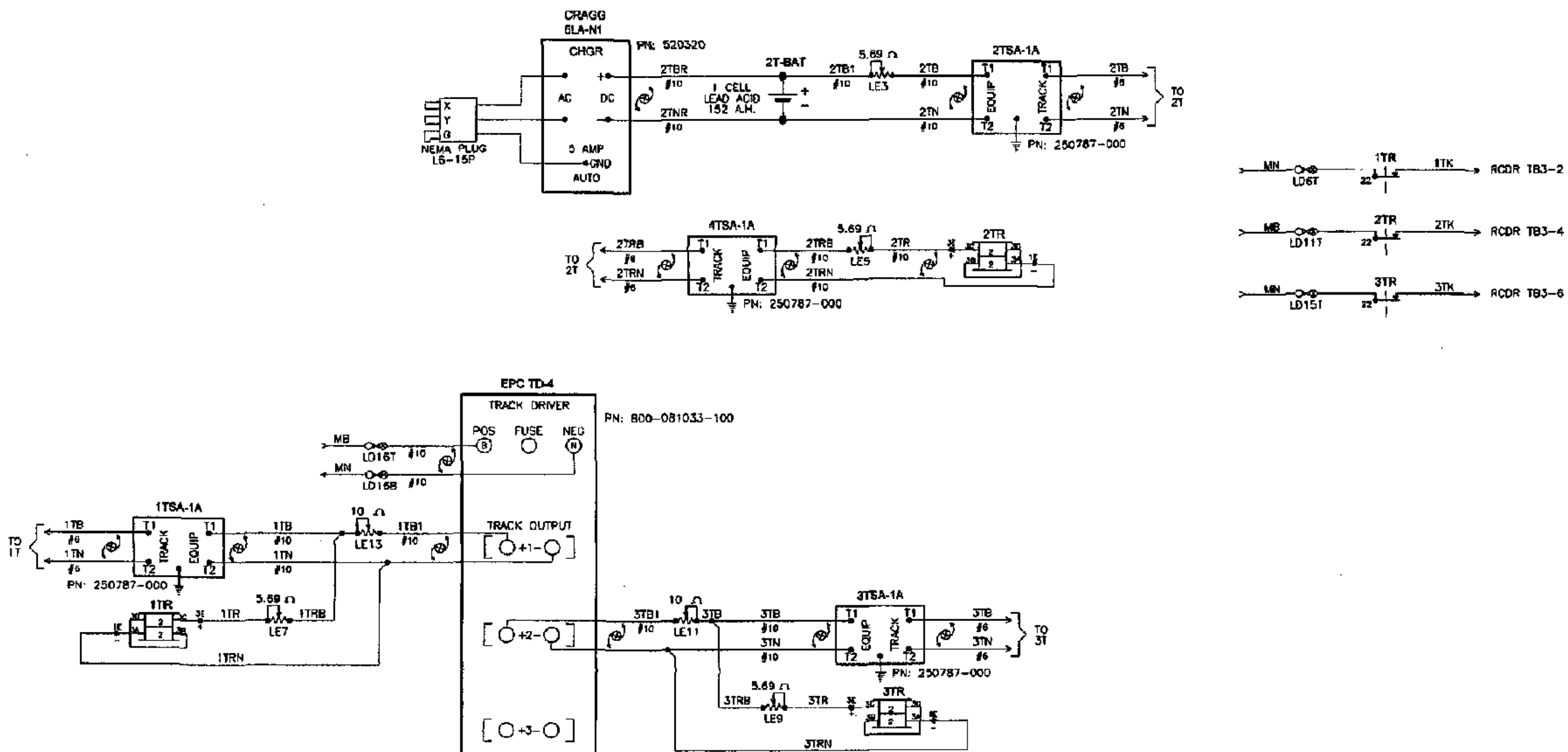

NOTE: ALL WIRING THIS SHEET #14 AWG UNLESS NOTED OTHERWISE.

Wheeling & Lake Erie Railway

W&LE

LOCATION: AURORA ROAD/STATE ROUTE 82, TWINSBURG, OH

ORIGINAL DATE	12/1/2010	TITLE	CROSSING CONTROL CIRCUITS		
DESIGNER	CTC	SUB	CLEVELAND	CTC NO.	CT10171
DRAFTSMAN	CTC	RRMP	0020.90	SCALE	N.T.S.
CHECKER	CTC	DOT NO.	472 689L	SHEET	02 of 18

CHANGE FROM TYPICAL: Y

REVISION BLOCK

ST RELAY LAYOUT

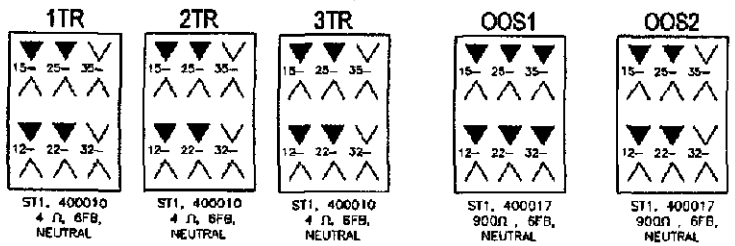

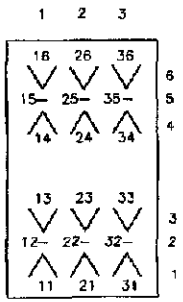

EXAMPLE
ST1, 400017
900Ω , 6FB,
NEUTRAL

∨ CONTACT, NOT USED
▼ CONTACT, USED

∨ FRONT
– HEEL
∧ BACK

REVISION BY DATE	REVISION
	OOS RELAYS ADDED 3/20/2011

W&LE

Wheeling & Lake Erie Railway

LOCATION: AURORA ROAD/STATE ROUTE 82
TWINSBURG, OH

ORIGINAL DATE	12/1/2010	TITLE	RELAYS		
DESIGNER	CTC	SUB	CLEVELAND	CTC NO.	CF10171
DRAFTSMAN	CTC	MAP	Q020.90	SCALE	N.T.S.
CHECKER	CTC	DWG NO.	472 689L	SHEET	03 OF 18

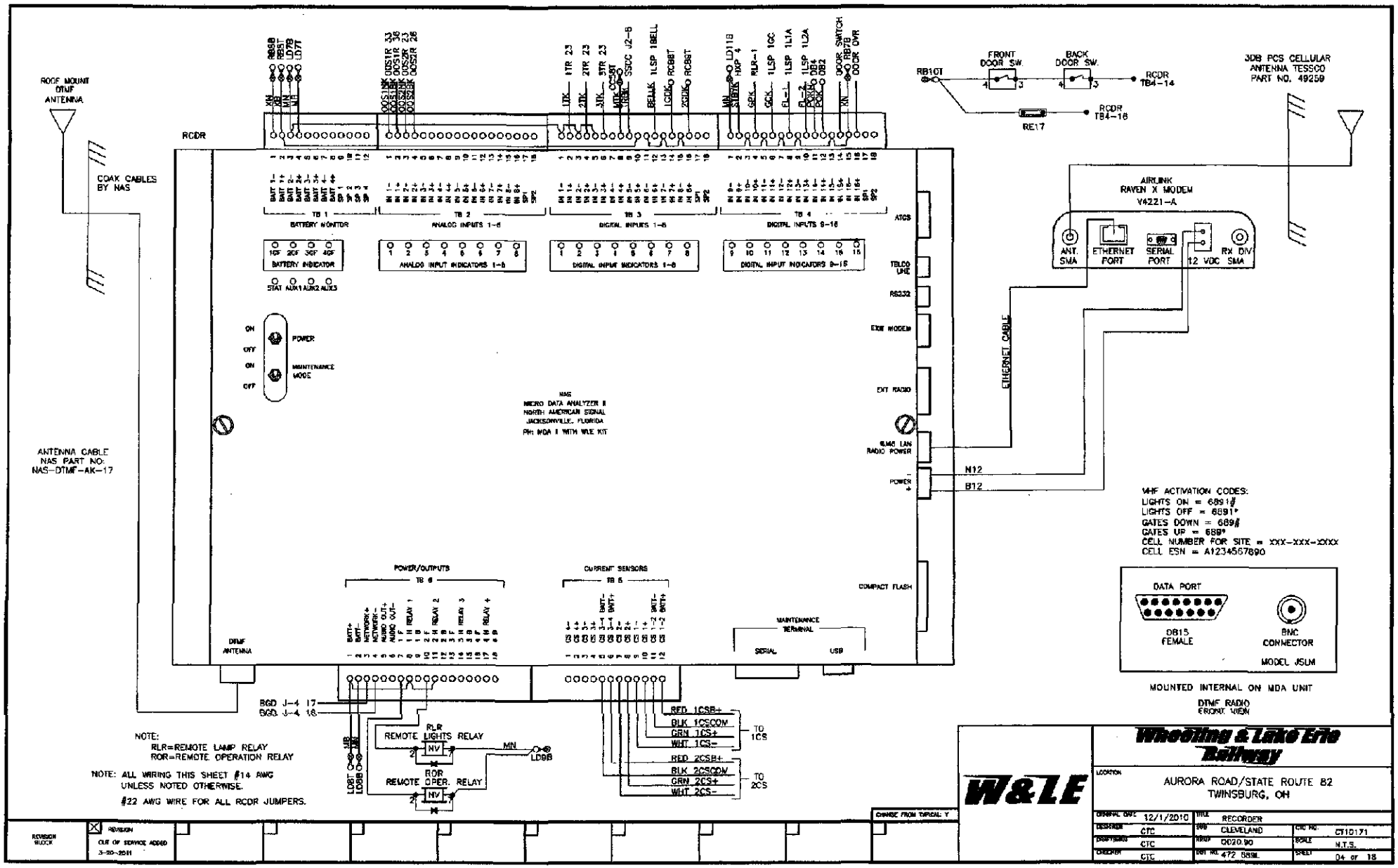
ROOF MOUNT DTMF ANTENNA
COAX CABLES BY NAS
RCDR
ANTENNA CABLE NAS PART NO: NAS-DTMF-AK-17
DTMF ANTENNA
TB 1 BATTERY MONITOR
TB 2 ANALOG INPUTS 1-8
TB 3 DIGITAL INPUTS 1-8
TB 4 DIGITAL INPUTS 9-16
BATTERY INDICATOR
ANALOG INPUT INDICATORS 1-8
DIGITAL INPUT INDICATORS 1-8
DIGITAL INPUT INDICATORS 9-16
STAT AUX1 AUX2 AUX3
POWER
MAINTENANCE MODE
NAS MICRO DATA ANALYZER II NORTH AMERICAN SIGNAL JACKSONVILLE, FLORIDA PH: MDA II WITH WLE KIT
ATCS
TELCO LINE
RS232
EXIT RADIO
NAS LAN RADIO POWER
COMPACT FLASH
POWER/OUTPUTS TB 6
CURRENT SENSORS TB 5
MAINTENANCE TERMINAL
SERIAL
USB
BGD J-4 17
BGD J-4 18
NOTE:
RLR=REMOTE LAMP RELAY
ROR=REMOTE OPERATION RELAY
NOTE: ALL WIRING THIS SHEET #14 AWG UNLESS NOTED OTHERWISE.
#22 AWG WIRE FOR ALL RCDR JUMPERS.
REMOTE LIGHTS RELAY
REMOTE OPER. RELAY
RLR
ROR
NV
MN
LDBB
RED 1CSB+
BLK 1CSCOM
GRN 1CS+
WHT 1CS-
TO 1CS
RED 2CSB+
BLK 2CSCOM
GRN 2CS+
WHT 2CS-
TO 2CS
FRONT DOOR SW.
BACK DOOR SW.
RB10T
RE17
RCDR TB4-14
RCDR TB4-16
3DB PCS CELLULAR ANTENNA TESSCO PART NO. 49259
AIRLINK RAVEN X MODEM V4221-A
ANT. SMA
ETHERNET PORT
SERIAL PORT
12 VDC
RX DIV SMA
ETHERNET CABLE
N12
B12
VHF ACTIVATION CODES:
LIGHTS ON = 689#
LIGHTS OFF = 689*
GATES DOWN = 689#
GATES UP = 689*
CELL NUMBER FOR SITE = XXX-XXX-XXXX
CELL ESN = A1234567890
DATA PORT
DB15 FEMALE
BNC CONNECTOR
MODEL JSLM
MOUNTED INTERNAL ON MDA UNIT
DTMF RADIO
FRONT VIEW
W&LE
Wheeling & Lake Erie Railway
LOCATION
AURORA ROAD/STATE ROUTE 82
TWINSBURG, OH
ORIGINAL DWG 12/1/2010
TITLE RECORDER
DESIGNER CTC
DRAFTSMAN CTC
CHECKER CTC
DIV CLEVELAND
GROUP C020.90
DWG NO. 472 SSSL
CTC NO. CT10171
SCALE N.T.S.
SHEET 04 OF 18
CHANGE FROM TYPICAL Y
REVISION BLOCK
REVISION
OUT OF SERVICE ADDED 3-20-2011

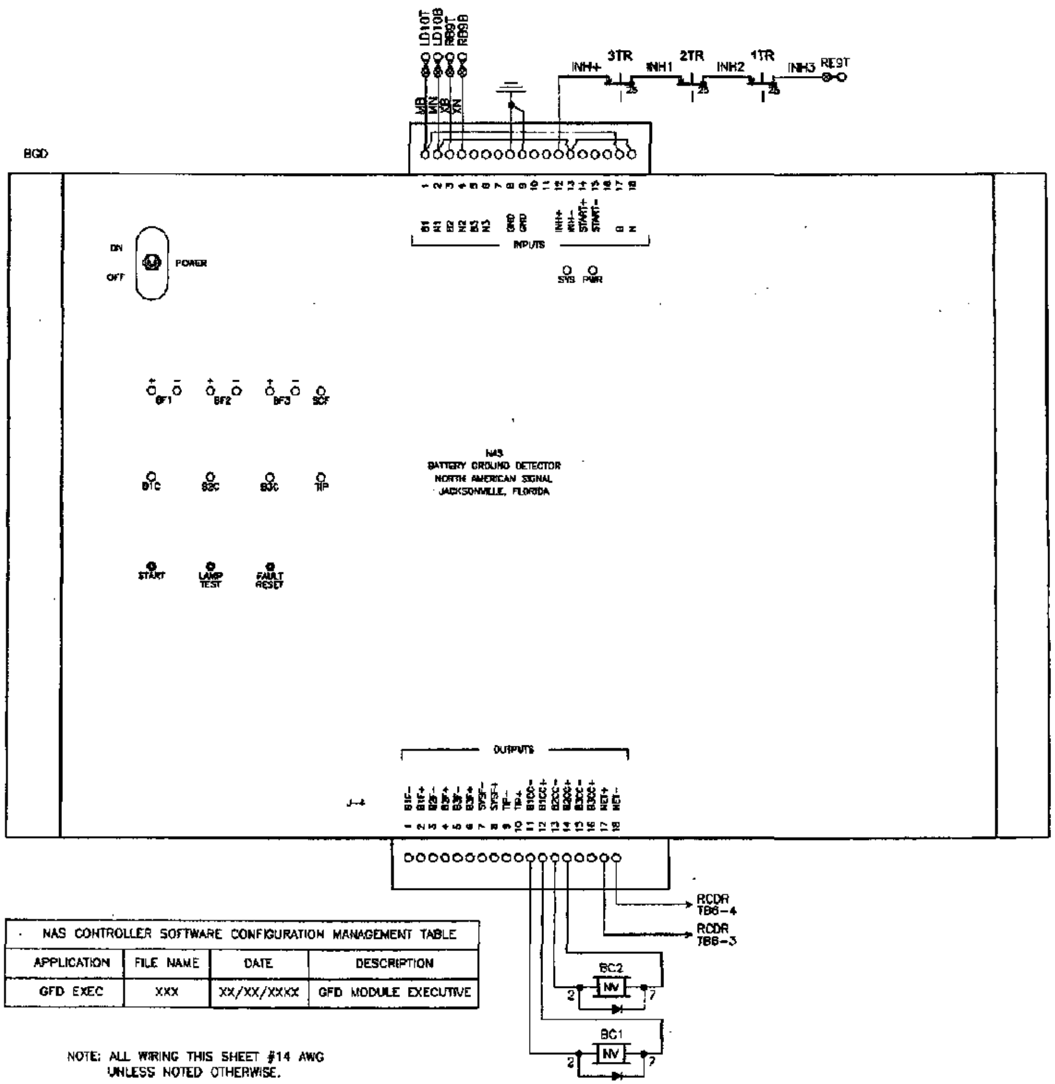

SW1 CURRENT 1/10 MA

POSITION	1	2	3	4	5	6	7	8
CLOSED			■		■			
OPEN								

(2 MA)

SWITCH VALUES CLOSED
POSITION (BINARY)

SW1 = 1
SW2 = 2
SW3 = 4
SW4 = 8
SW5 = 16
SW6 = 32
SW7 = 64
SW8 = 128

SW1 CURRENT 1/10 MA

POSITION	1	2	3	4	5	6	7	8
CLOSED			■	■				
OPEN								■

← DAYS
← HOURS

(12 HOURS)

SWITCH VALUES CLOSED
POSITION (BINARY)

SW1 = 1
SW2 = 2
SW3 = 4
SW4 = 8
SW5 = 16
SW6 = 32
SW7 = 64
SW8 OPEN-HOUR CLOSED-DAYS

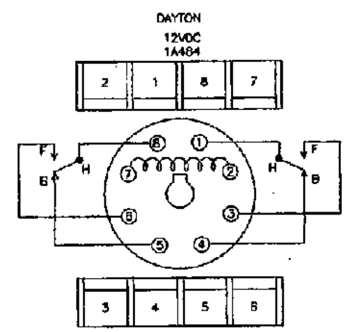

BC1, BC2, ROR, RLR

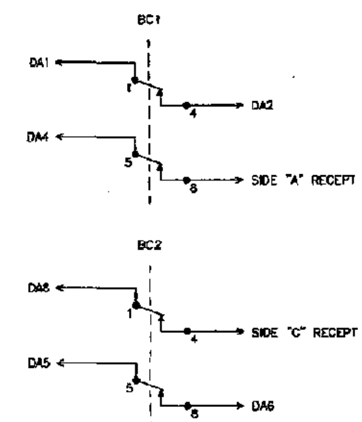

NAS CONTROLLER SOFTWARE CONFIGURATION MANAGEMENT TABLE			
APPLICATION	FILE NAME	DATE	DESCRIPTION
GFD EXEC	XXX	XX/XX/XXXX	GFD MODULE EXECUTIVE

NOTE: ALL WIRING THIS SHEET #14 AWG UNLESS NOTED OTHERWISE.

REVISION BLOCK

CHANGE FROM TYPICAL Y

W&LE

Wheeling & Lake Erie Railway

LOCATION: AURORA ROAD/STATE ROUTE 82
TWINSBURG, OH

ORIGINAL DATE	12/1/2010	TITLE	BGD		
DESIGNER	CTC	SUB	CLEVELAND	CTC NO.	CT10171
DRAFTSMAN	CTC	MP	0020.90	SCALE	N.T.S.
CHECKER	CTC	DOT NO.	472 689L	SHEET	05 of 18

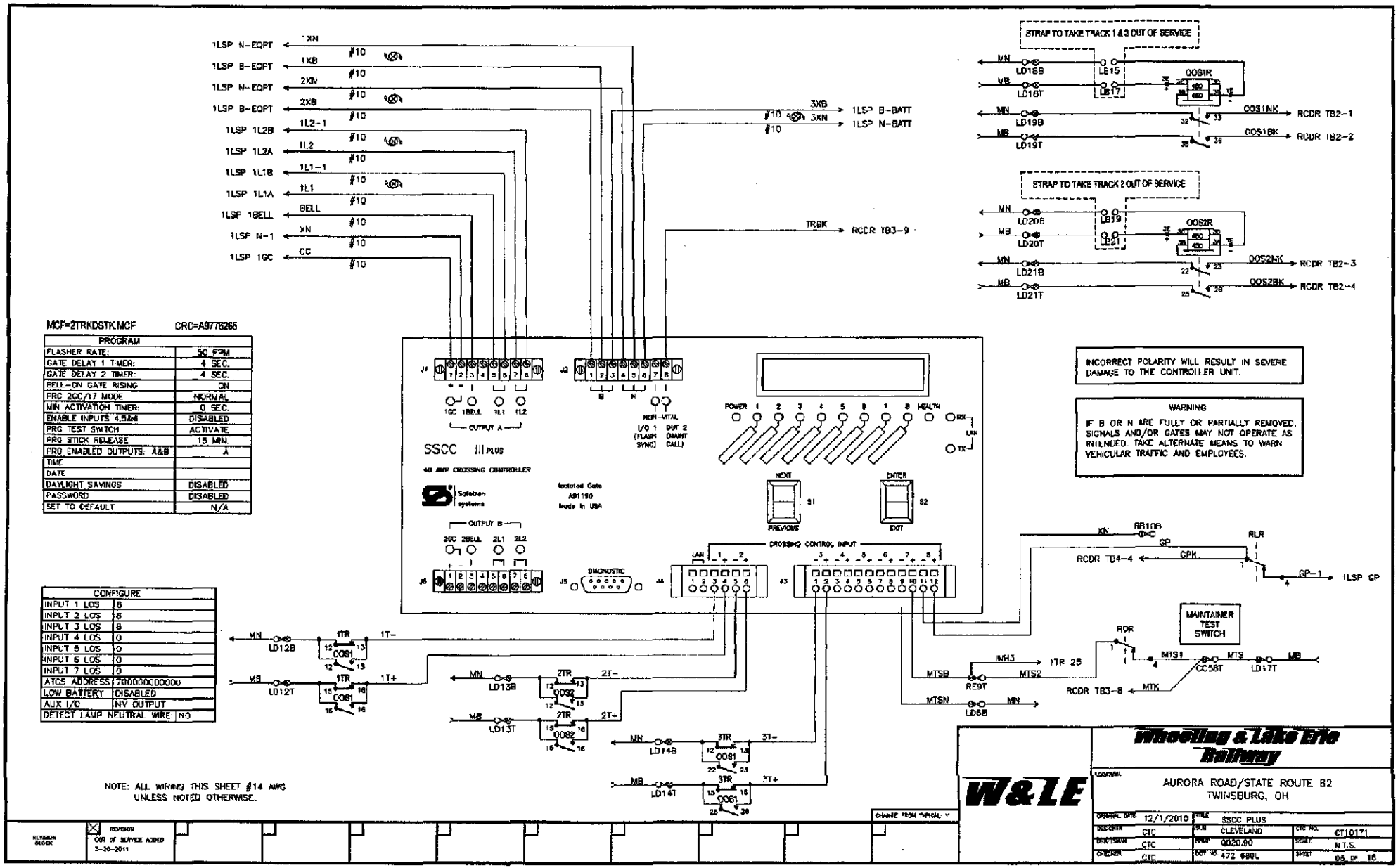
1LSP N-EQPT
1LSP B-EQPT
1LSP N-EQPT
1LSP B-EQPT
1LSP 1L2B
1LSP 1L2A
1LSP 1L1B
1LSP 1L1A
1LSP 1BELL
1LSP N-1
1LSP 1GC
1XN
1XB
2XN
2XB
1L2-1
1L2
1L1-1
1L1
BELL
XN
CC
#10
3XB
3XN
1LSP B-BATT
1LSP N-BATT
TRBK
RCDR TB3-9
STRAP TO TAKE TRACK 1 & 3 OUT OF SERVICE
LD18B
LD18T
LD19B
LD19T
LB15
LB17
OOS1R
OOS1NK
OOS1BK
RCDR TB2-1
RCDR TB2-2
STRAP TO TAKE TRACK 2 OUT OF SERVICE
LD20B
LD20T
LD21B
LD21T
LB19
LB21
OOS2R
OOS2NK
OOS2BK
RCDR TB2-3
RCDR TB2-4
MCF=2TRKDSTK.MCF
CRC=A9776265
PROGRAM
FLASHER RATE: 50 FPM
GATE DELAY 1 TIMER: 4 SEC.
GATE DELAY 2 TIMER: 4 SEC.
BELL-ON GATE RISING ON
PRC 2GC/17 MODE NORMAL
MIN ACTIVATION TIMER: 0 SEC.
ENABLE INPUTS 4,5,6 DISABLED
PRG TEST SWITCH ACTIVATE
PRG STICK RELEASE 15 MIN.
PRG ENABLED OUTPUTS: A&B A
TIME
DATE
DAYLIGHT SAVINGS DISABLED
PASSWORD DISABLED
SET TO DEFAULT N/A
CONFIGURE
INPUT 1 LOS 8
INPUT 2 LOS 8
INPUT 3 LOS 8
INPUT 4 LOS 0
INPUT 5 LOS 0
INPUT 6 LOS 0
INPUT 7 LOS 0
ATCS ADDRESS 700000000000
LOW BATTERY DISABLED
AUX I/O INV OUTPUT
DETECT LAMP NEUTRAL WIRE: NO
SSCC III PLUS
40 AMP CROSSING CONTROLLER
Safetran systems
Isolated Gate
A91190
Made in USA
OUTPUT A
OUTPUT B
NON-VITAL
I/O 1 (FLASH SYNC)
OUT 2 (MAINT CALL)
POWER
HEALTH
NEXT
ENTER
PREVIOUS
EXIT
DIAGNOSTIC
CROSSING CONTROL INPUT
INCORRECT POLARITY WILL RESULT IN SEVERE DAMAGE TO THE CONTROLLER UNIT.
WARNING
IF B OR N ARE FULLY OR PARTIALLY REMOVED, SIGNALS AND/OR GATES MAY NOT OPERATE AS INTENDED. TAKE ALTERNATE MEANS TO WARN VEHICULAR TRAFFIC AND EMPLOYEES.
RB10B
RCDR TB4-4
RLR
1LSP GP
MAINTAINER TEST SWITCH
ROR
MTS1
MTS
MTS2
MTSB
MTSN
MTK
RCDR TB3-8
1TR 25
LD17T
CC58T
RE9T
LD6B
LD12B
LD12T
LD13B
LD13T
LD14B
LD14T
1TR
2TR
3TR
OOS1
OOS2
1T-
1T+
2T-
2T+
3T-
3T+
NOTE: ALL WIRING THIS SHEET #14 AWG UNLESS NOTED OTHERWISE.
REVISION BLOCK
REVISION
OUT OF SERVICE ADDED
3-26-2011
CHANGE FROM TYPICAL
W&LE
Wheeling & Lake Erie Railway
LOCATION
AURORA ROAD/STATE ROUTE 82
TWINSBURG, OH
ORIGINAL DATE 12/1/2010
TITLE SSCC PLUS
DESIGNER CTC
SIGN CLEVELAND
CTC NO. CT10171
DRAWN CTC
MAP 0020.90
SCALE N.T.S.
CHECKED CTC
DOT NO. 472 680L
SHEET 05 OF 16

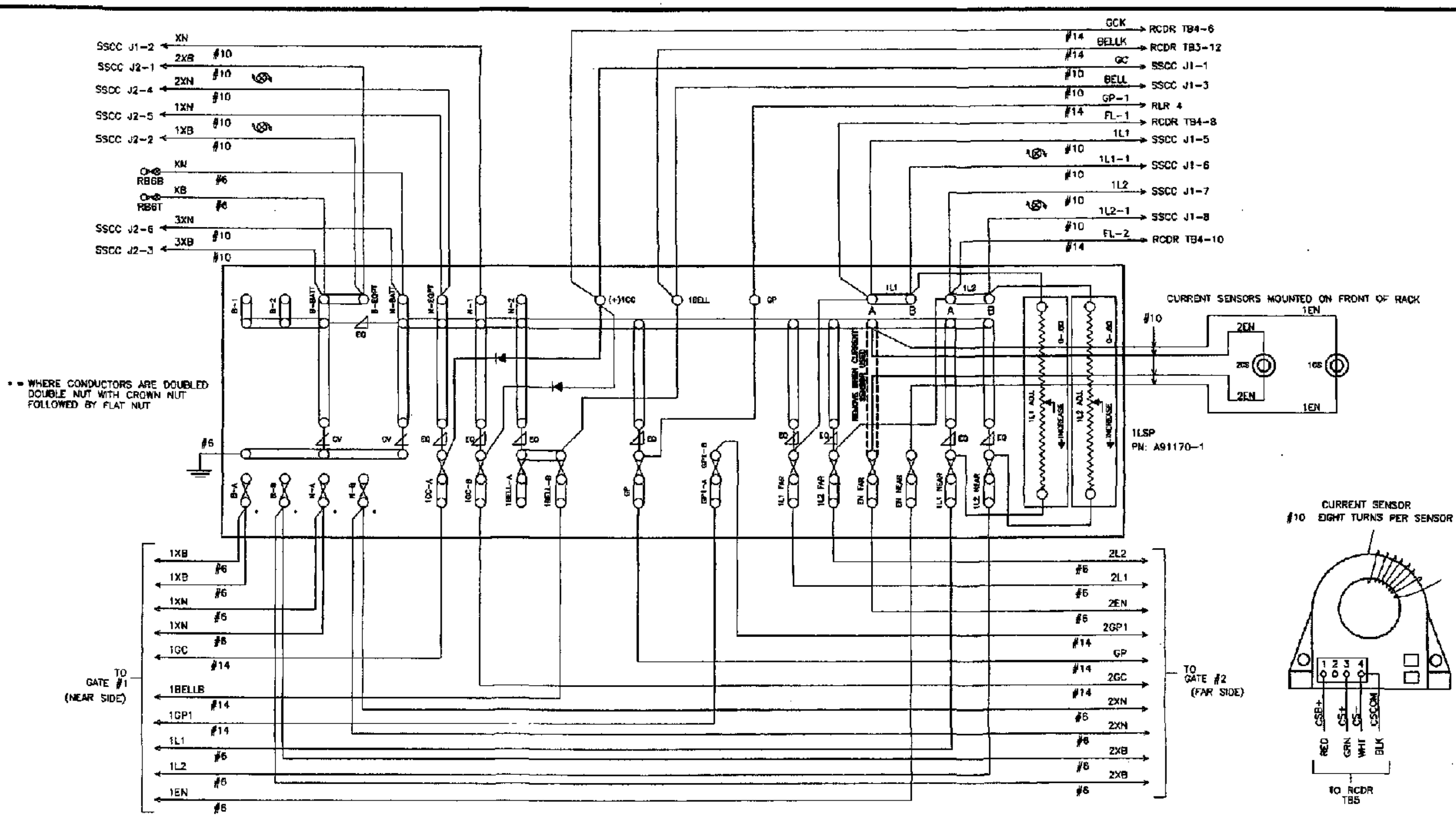

NOTE: ALL WIRING THIS SHEET #14 AWG UNLESS NOTED OTHERWISE.

Wheeling & Lake Erie Railway			
W&LE	LOCATION: AURORA ROAD/STATE ROUTE 82 TWINSBURG, OH		
ORIGINAL DATE: 12/1/2010	TITLE: 1LSP		
DESIGNER: CTC	SUB: CLEVELAND	CTC NO.: CT10171	
DRAFTSMAN: CTC	MILEP: Q020.90	SCALE: N.T.S.	
CHECKER: CTC	DOT NO.: 472 869L	SHEET: 07 of 18	

CHANGE FROM TYPICAL: N

REVISION BLOCK

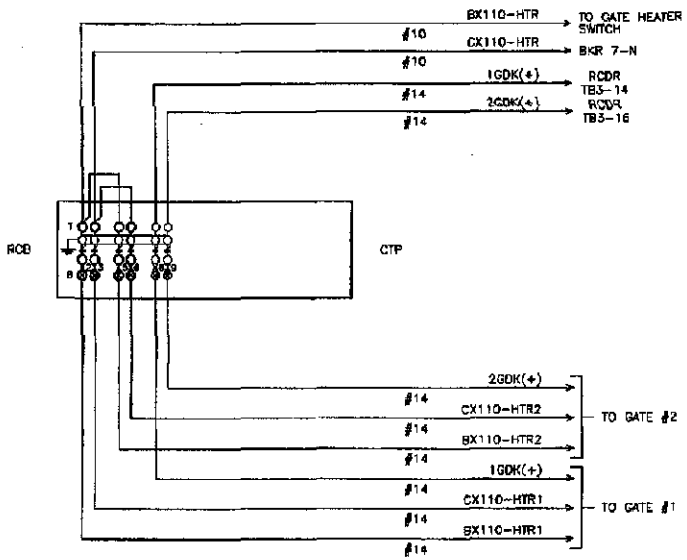

CHANGE FROM TYPICAL 14

REVISION BLOCK

W&LE

Wheeling & Lake Erie Railway

LOCATION: AURORA ROAD/STATE ROUTE 82
TWINSBURG, OH

ORIGINAL DATE 12/1/2010	TITLE CTP		
DESIGNER CTC	SUB CLEVELAND	CTC NO. CT10171	
DRAFTSMAN CTC	RANGE 0020.80	SCALE N.T.S.	
CHECKER CTC	DWG NO 472 599L	SHEET 08 OF 18	

SAFETRAN MODEL S-40
GATE MECHANISM

CONTACT	CLOSED	FUNCTION
6	45'-90'	POWER DOWN
7	0'-89'	POWER UP
8	83'-90'	FLASHING LIGHT
9	5'-90'	BELL
10	0'-5'	HORIZONTAL SNUB
11	0'-5'	GATE DOWN INDICATION

WITH GATE IN UP POSITION

GATE #1

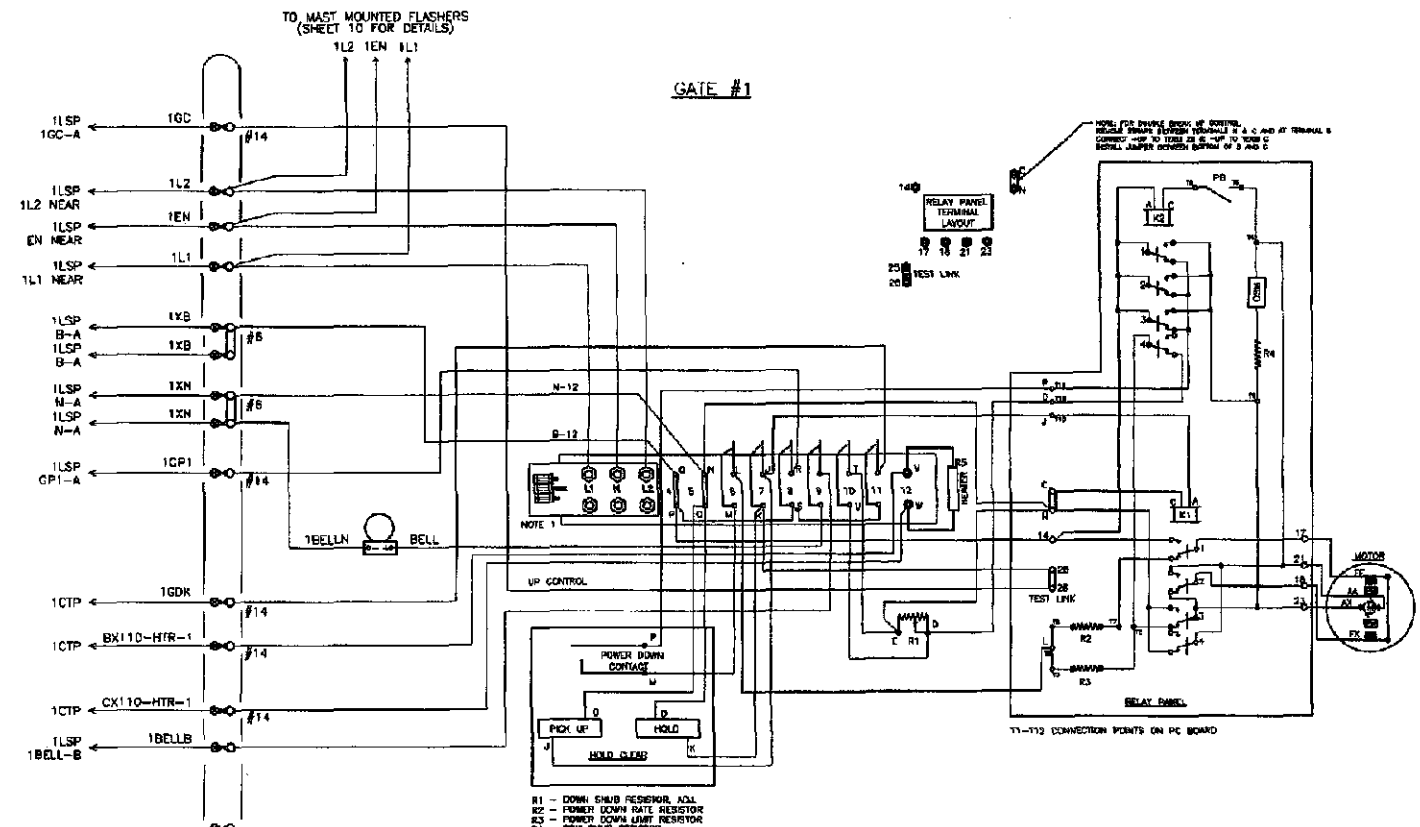

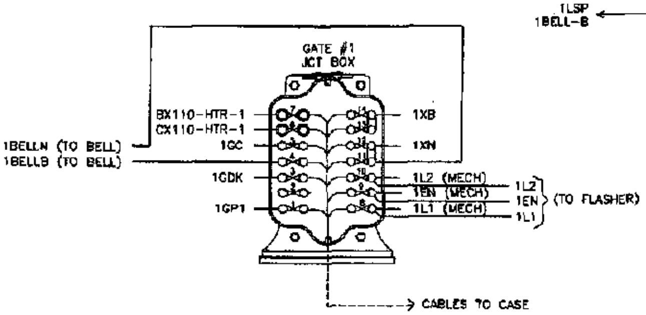

NOTE 1: REFER TO SHEET 10 FOR FUSE BLOCK & GATE ARM LIGHT WIRING.

MODEL S-40 GATE WIRING DIAGRAM

S-40 PN: 074000-W00172
INCLUDES: ZINC PLATED HARDWARE PKG., MAINT. PANEL & SWITCH, GD CONTACT, 115V HEATER AND GATE ARM FUSE BLOCK

W&LE

Wheeling & Lake Erie Railway

LOCATION: AURORA ROAD/STATE ROUTE 82
TWINSBURG, OH

ORIGINAL DATE	12/1/2010	TITLE	GATE #1 MECHANISM (NEAR SIDE)		
DESIGNER		SUB	CLEVELAND	DTC NO.	CT10171
DRAFTSMAN		SEMP	0020.90	SCALE	N.T.S.
CHECKER		DOT NO.	472 669L	SHEET	09 OF 18

CHANGE FROM TYPICAL: R

REVISION BLOCK

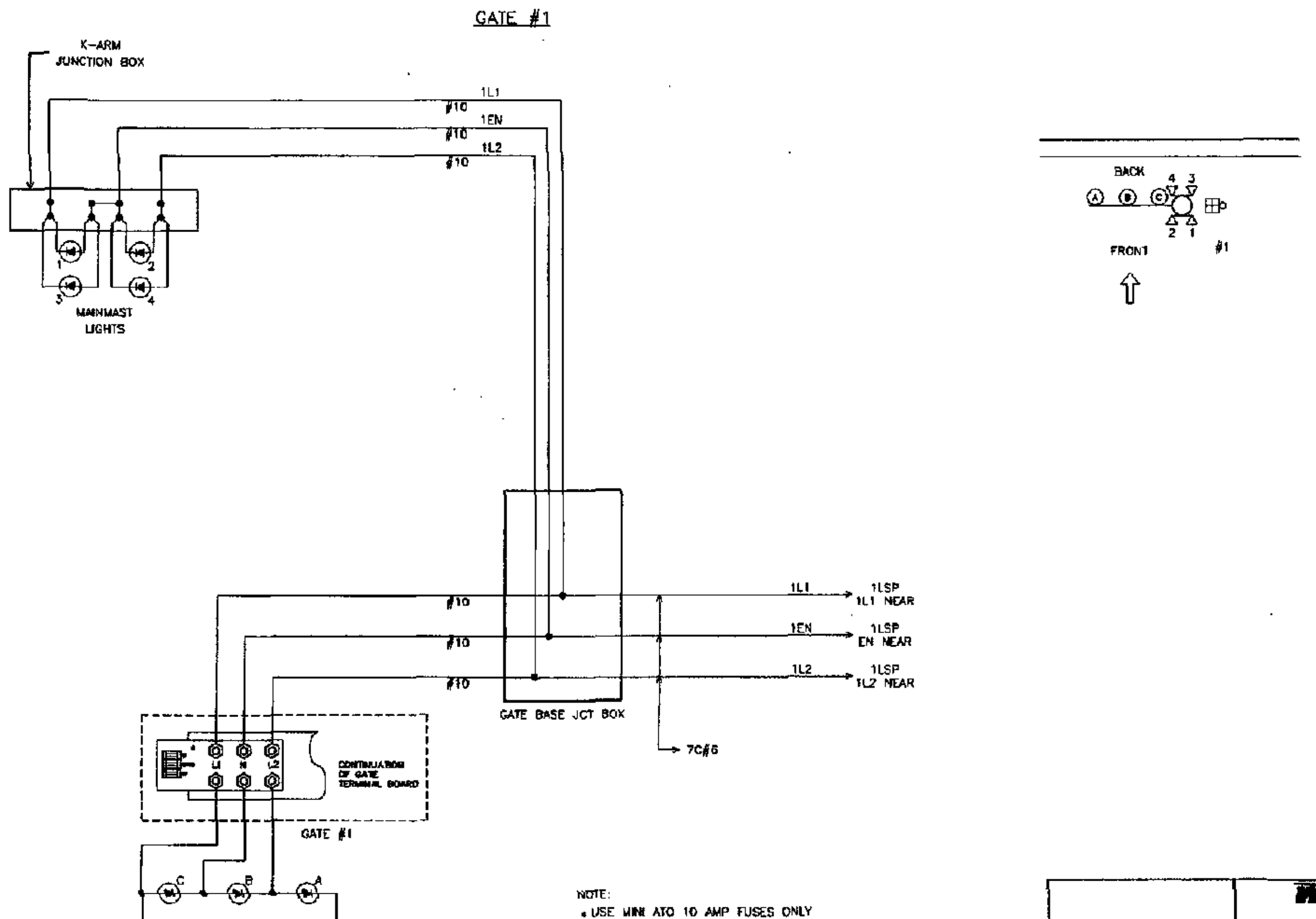

NOTE:
* USE MINI ATO 10 AMP FUSES ONLY

W&LE	Wheeling & Lake Erie Railway			
LOCATION	AURORA ROAD/STATE ROUTE 82 TWINSBURG, OH			
ORIGINAL DATE 12/1/2010	TITLE GATE #1 LIGHTS (NEAR SIDE)			
DESIGNER	SUB CLEVELAND		C/C NO.	CT10171
DRAFTSMAN	MILEPOST Q020.80		SCALE	N.T.S.
CHECKER	DOT NO. 472 689L		SHEET	10 of 18

REVISION BLOCK

GATE #2

SAFETRAN MODEL S-40
GATE MECHANISM

CONTACT	CLOSED	FUNCTION
6	45'-90'	POWER DOWN
7	0'-89'	POWER UP
8	83'-90'	FLASHING LIGHT
9	5'-90'	BELL (NOT USED)
10	0'-5'	HORIZONTAL SNUB
11	0'-5'	GATE DOWN INDICATION

WITH GATE IN UP POSITION

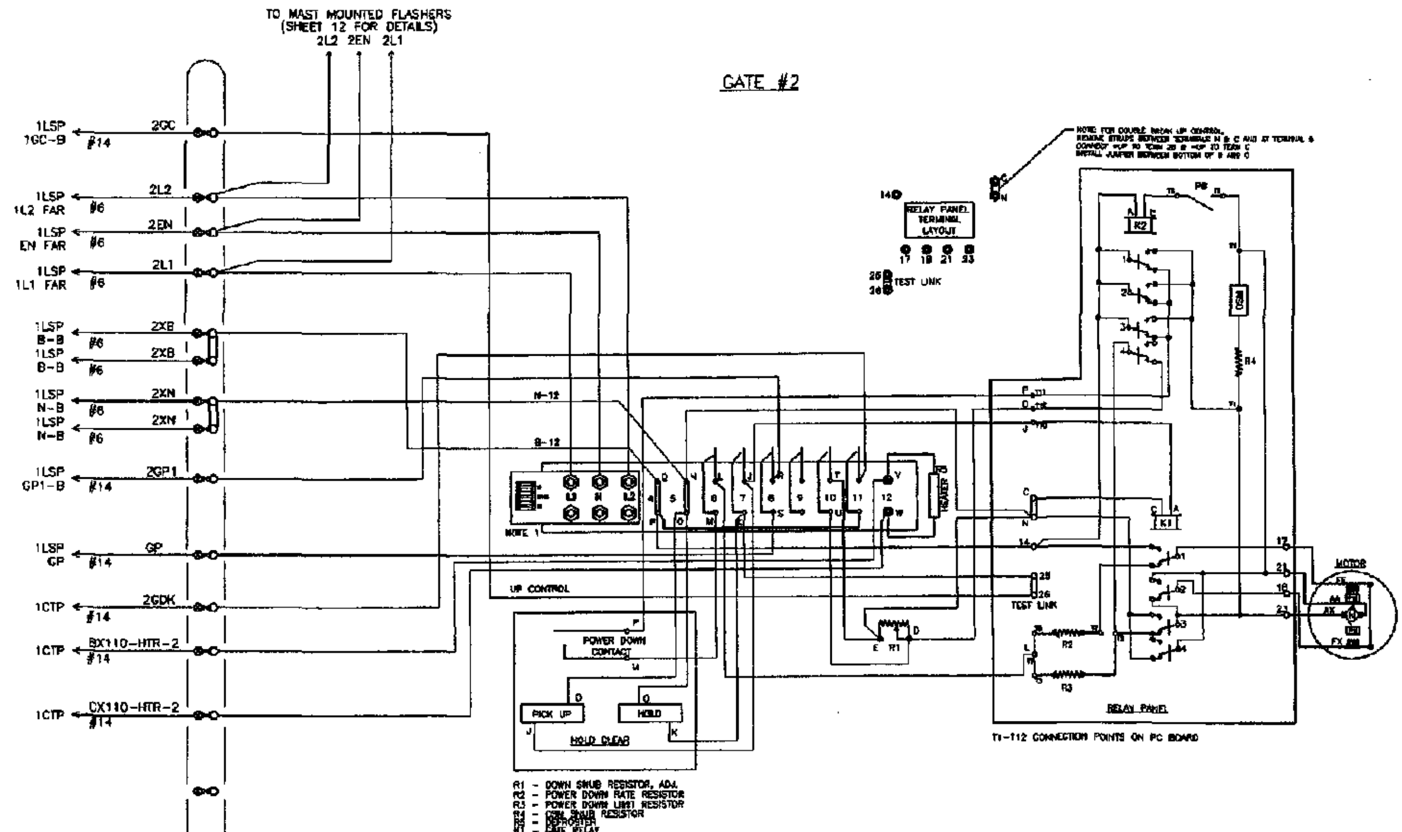

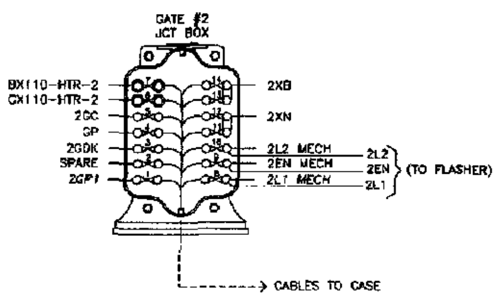

NOTE 1: REFER TO SHEET 12 FOR FUSE
BLOCK & GATE ARM LIGHT WIRING.

MODEL S-40 GATE WIRING DIAGRAM

S-40 PN: 074000-W00172
INCLUDES: ZINC PLATED HARDWARE PKG., MAINT. PANEL
& SWITCH, GD CONTACT, 115V HEATER AND GATE ARM
FUSE BLOCK

Wheeling & Lake Erie Railway

W&LE

LOCATION: AURORA ROAD/STATE ROUTE 82
TWINSBURG, OH

ORIGINAL DATE	12/1/2010	TITLE	GATE #2 MECHANISM (FAR SIDE)		
SKETCHER	CTC	SUB	CLEVELAND	CTC NO.	CT10171
DRAFTSMAN	CTC	MILEPOST	0020.90	SCALE	N.T.S.
CHECKER	CTC	DOT NO.	472 689L	SHEET	11 OF 18

CHANGE FROM TYPICAL: N

REVISION BLOCK

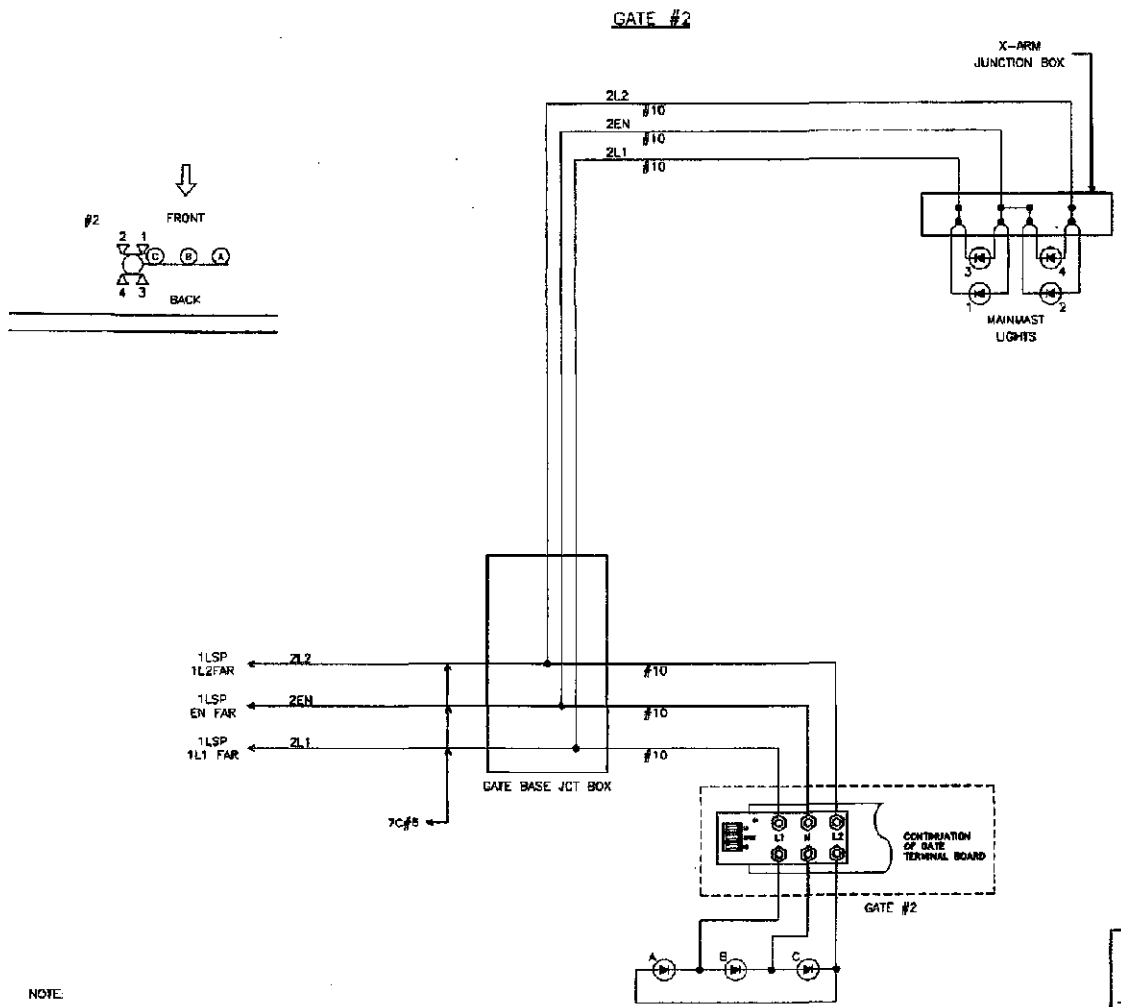

NOTE:
* USE MINI ATO 10 AMP FUSES ONLY

REVISION BLOCK

W&LE

Wheeling & Lake Erie Railway

LOCATION: AURORA ROAD/STATE ROUTE 82
TWINSBURG, OH

ORIGINAL DATE 12/1/2010	TITLE GATE #2 LIGHTS (FAR SIDE)		
DESIGNER CTC	SUB CLEVELAND	CTC NO. CIT10171	
DRAFTSMAN CTC	RAMP Q020.90	SCALE N.T.S.	
CHECKER CTC	DOT NO. 472 689L	SHEET 12 OF 18	

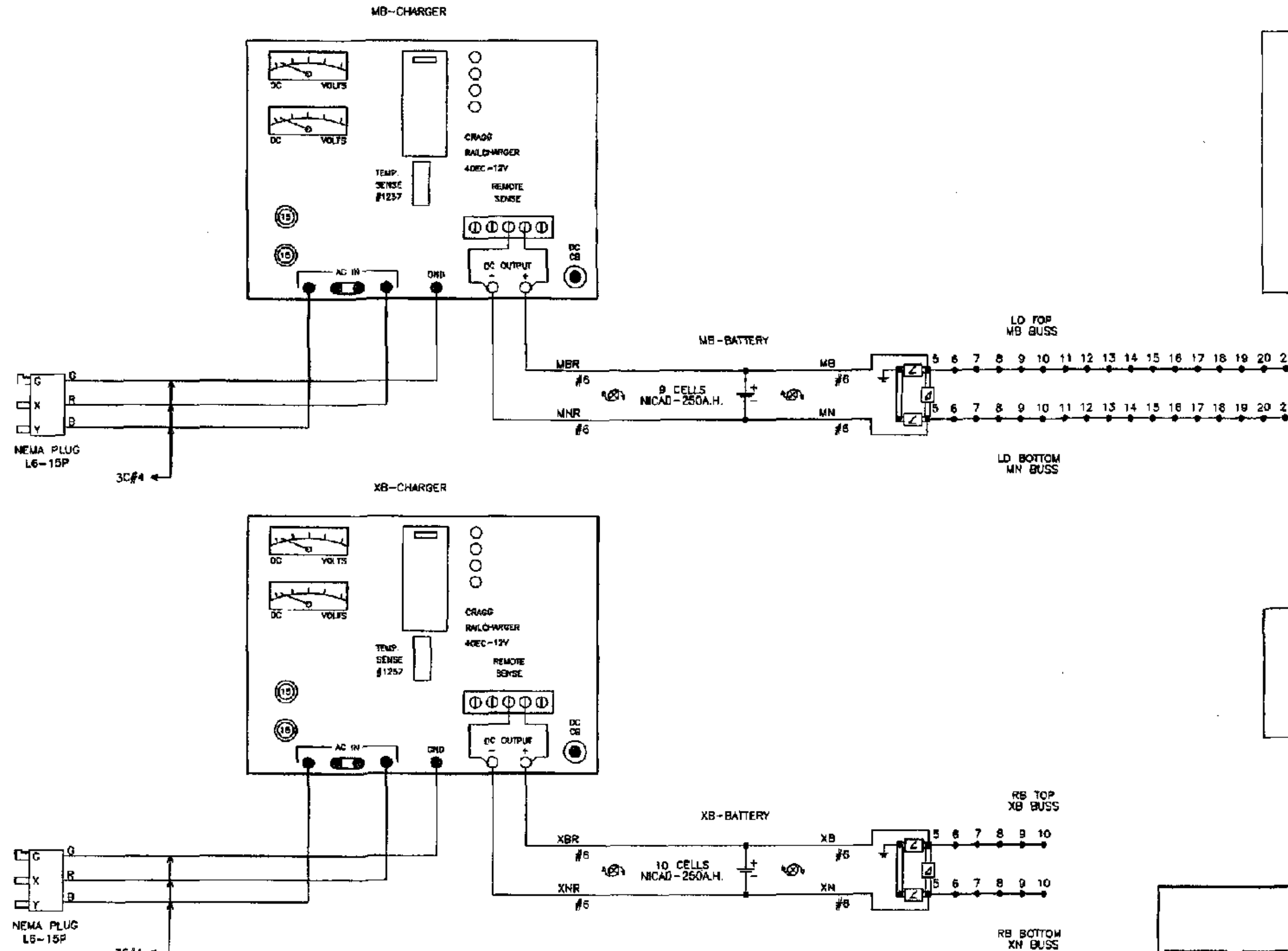

BATTERY BUSS DETAILS

MB BUSS (TOP)	LD	MN BUSS (BOTTOM)
OOS2R-25	21	OOS2R-22
LB21	20	LB19
OOS1R-35	19	OOS1R-32
LB17	18	LB15
CC58B	17	SPARE
EPC TD-4+	16	EPC TD-4-
3TR 22	15	SPARE
3TR 15	14	3TR 12
2TR 15	13	2TR 12
1TR 15	12	1TR 12
2TR 32	11	RCDR TB4-1
BGD INPUT 1	10	BGD INPUT 2
ROR 4	9	RLR 7
RCDR TB6-1	8	RCDR TB6-2
RCDR TB1-4	7	RCDR TB1-3
1TR 22	6	SSCC J3-9
MB BATT+	5	MN BATT-

BATTERY BUSS DETAILS

XB BUSS (TOP)	RB	XN BUSS (BOTTOM)
DOOR SWITCH	10	SSCC J3-11
BGD INPUT 3	9	BGD INPUT 4
RCDR TB1-2	8	RCDR TB1-1
SPARE	7	RCDR TB4-15
1LSP B-BATT	6	1LSP N-BATT
XB BATT+	5	XN BATT-

REVISION BLOCK
REVISION: CGS CONNECTIONS 3-20-2011
CHANGE FROM TYPICAL Y

W&LE
Wheeling & Lake Erie Railway

LOCATION: AURORA ROAD/STATE ROUTE 82
TWINSBURG, OH

ORIGINAL DATE	12/1/2010	TITLE	BATTERY CHARGER		
DESIGNER	CTC	SUB	CLEVELAND	CTC NO.	CT10171
DRAFTSMAN	CTC	MILEP	0020.90	SCALE	1"=2'
CHECKED	CTC	DOT NO.	472 689L	SHEET	13 of 18

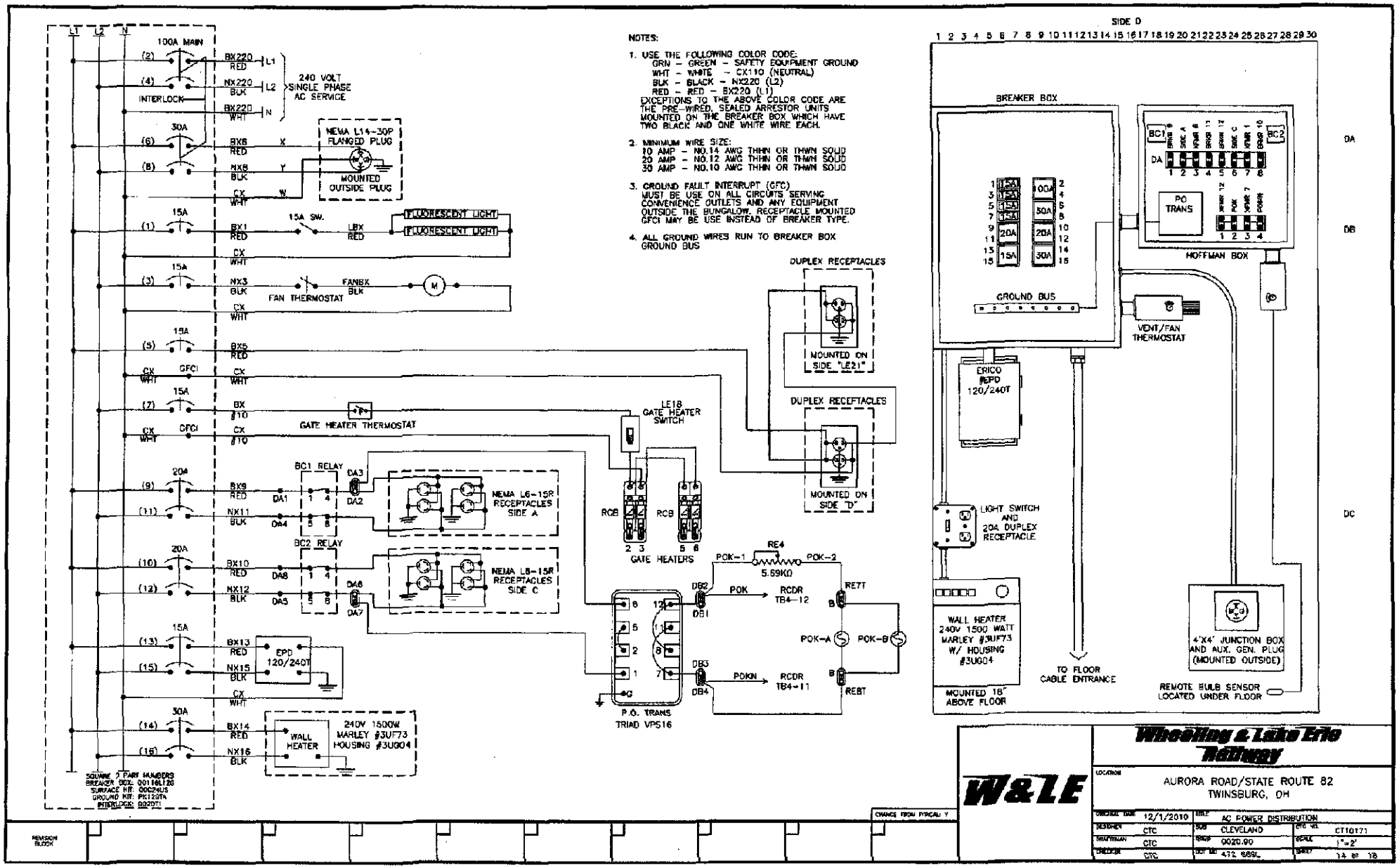
NOTES:
1. USE THE FOLLOWING COLOR CODE:
GRN - GREEN - SAFETY EQUIPMENT GROUND
WHT - WHITE - CX110 (NEUTRAL)
BLK - BLACK - NX220 (L2)
RED - RED - BX220 (L1)
EXCEPTIONS TO THE ABOVE COLOR CODE ARE THE PRE-WIRED, SEALED ARRESTOR UNITS MOUNTED ON THE BREAKER BOX WHICH HAVE TWO BLACK AND ONE WHITE WIRE EACH.
2. MINIMUM WIRE SIZE:
10 AMP - NO.14 AWG THHN OR THWN SOLID
20 AMP - NO.12 AWG THHN OR THWN SOLID
30 AMP - NO.10 AWG THHN OR THWN SOLID
3. GROUND FAULT INTERRUPT (GFC)
MUST BE USE ON ALL CIRCUITS SERVING CONVENIENCE OUTLETS AND ANY EQUIPMENT OUTSIDE THE BUNGALOW. RECEPTACLE MOUNTED GFCI MAY BE USE INSTEAD OF BREAKER TYPE.
4. ALL GROUND WIRES RUN TO BREAKER BOX GROUND BUS
100A MAIN
240 VOLT SINGLE PHASE AC SERVICE
INTERLOCK
NEMA L14-30P FLANGED PLUG
MOUNTED OUTSIDE PLUG
15A SW.
FLUORESCENT LIGHT
FAN THERMOSTAT
GATE HEATER THERMOSTAT
BC1 RELAY
BC2 RELAY
NEMA L6-15R RECEPTACLES SIDE A
NEMA L6-15R RECEPTACLES SIDE C
EPD 120/240T
WALL HEATER
240V 1500W MARLEY #3UF73 HOUSING #3UG04
LE18 GATE HEATER SWITCH
GATE HEATERS
P.O. TRANS TRIAD VPS16
RE4 5.69KΩ
RCDR TB4-12
RCDR TB4-11
DUPLEX RECEPTACLES
MOUNTED ON SIDE "LE21"
MOUNTED ON SIDE "D"
SIDE D
BREAKER BOX
GROUND BUS
HOFFMAN BOX
PO TRANS
VENT/FAN THERMOSTAT
ERICO EPD 120/240T
LIGHT SWITCH AND 20A DUPLEX RECEPTACLE
WALL HEATER 240V 1500 WATT MARLEY #3UF73 W/ HOUSING #3UG04
MOUNTED 18" ABOVE FLOOR
TO FLOOR CABLE ENTRANCE
4"X4" JUNCTION BOX AND AUX. GEN. PLUG (MOUNTED OUTSIDE)
REMOTE BULB SENSOR LOCATED UNDER FLOOR
Wheeling & Lake Erie Railway
W&LE
AURORA ROAD/STATE ROUTE 82
TWINSBURG, OH
AC POWER DISTRIBUTION
12/1/2010
CTC
CLEVELAND
CT10171
1"=2'
REVISION BLOCK
CHANGE FROM TYPICAL Y

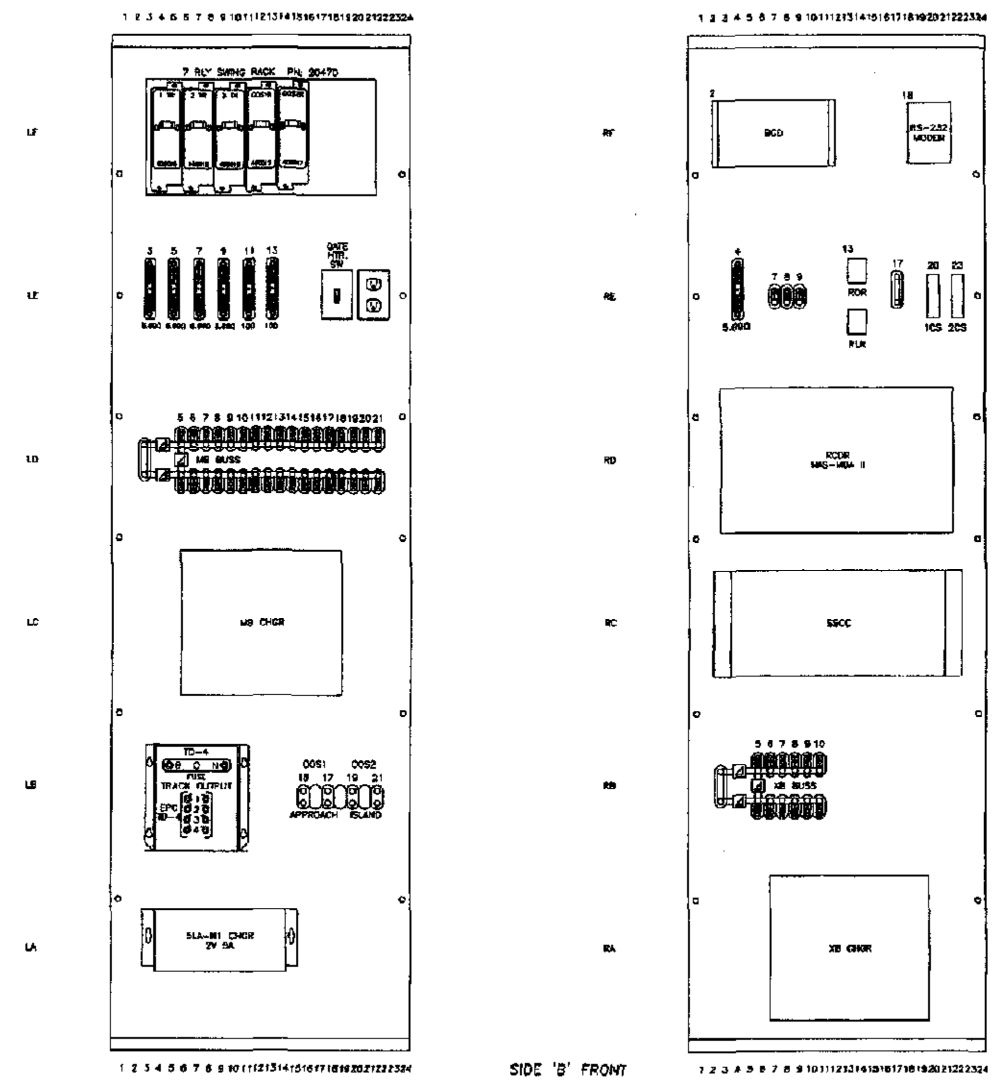

Wheeling & Lake Erie Railway

W&LE

LOCATION: AURORA ROAD/STATE ROUTE 82, TWINSBURG, OH

ORIGINAL DATE	12/1/2010	TITLE	RACK FRONT VIEW		
DESIGNER	CTC	SUB	CLEVELAND	CTC NO.	CT10171
DRAFTSMAN	CTC	MP	Q020.90	SCALE	1"=2'
CHECKER	CTC	DOT NO	472 689L	SHEET	15 of 18

CHANGE FROM TYPICAL: Y

REVISION BLOCK

REVISION: OUT OF SERVICE ADDED 3-20-2011

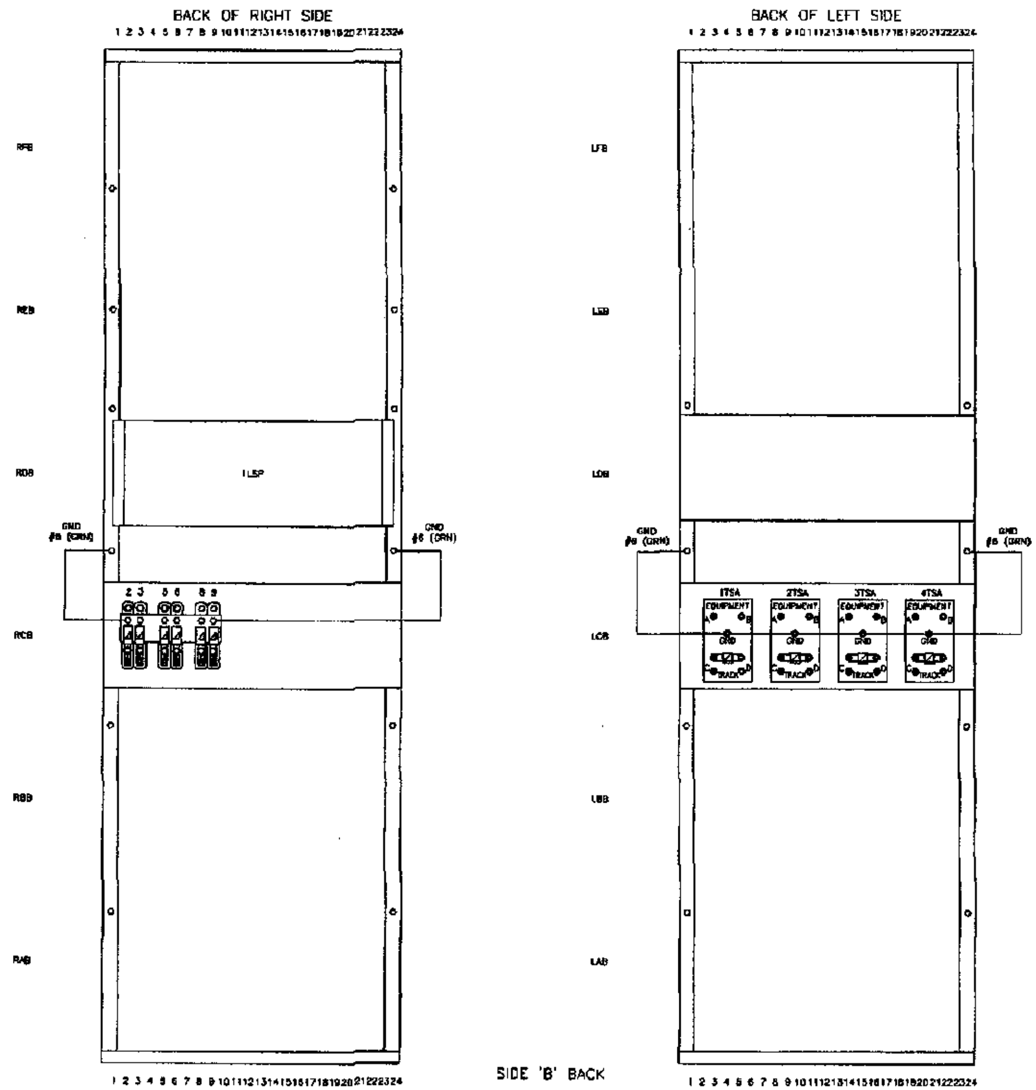

W&LE

Wheeling & Lake Erie Railway

LOCATION	AURORA ROAD/STATE ROUTE 82 TWINSBURG, OH				
ORIGINAL DATE	12/1/2010	TITLE	RACK BACK VIEW		
DESIGNER	CTC	SUB	CLEVELAND	CTC NO.	CT10171
DRAFTSMAN	CTC	MP	0020.90	SCALE	1"=2'
CHECKER	CTC	DOT NO.	472 889L	SHEET	16 OF 18

CHANGE FROM TYPICAL: Y

REVISION BLOCK

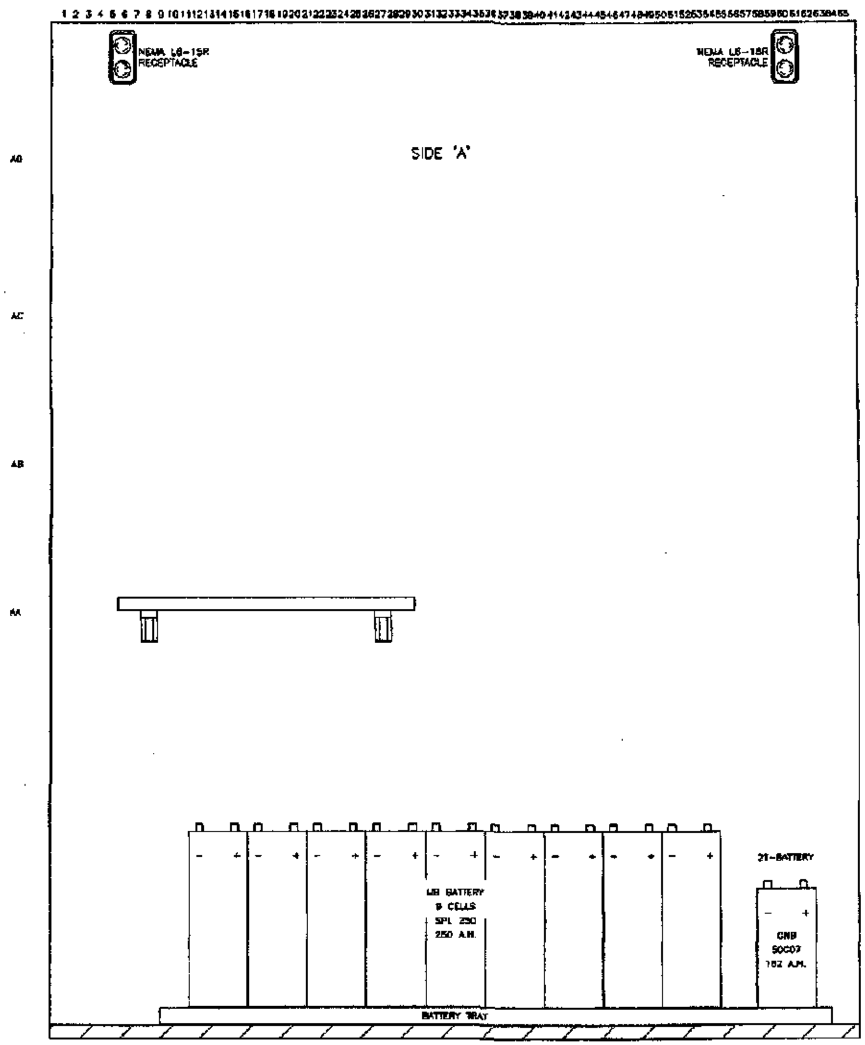

Wheeling & Lake Erie Railway	
W&LE	LOCATION: AURORA ROAD/STATE ROUTE 82 TWINSBURG, OH

ORIGINAL DATE	12/1/2010	TITLE	SIDE "A"		
DESIGNER	CTC	SUB	CLEVELAND	C&S NO.	CT10171
DRAFTSMAN	CTC	MILEP	0020.90	SCALE	1"=2'
CHECKER	CTC	DOT NO.	472 669L	SHEET	17 OF 18

CHANGE FROM TYPICAL: Y

REVISION BLOCK

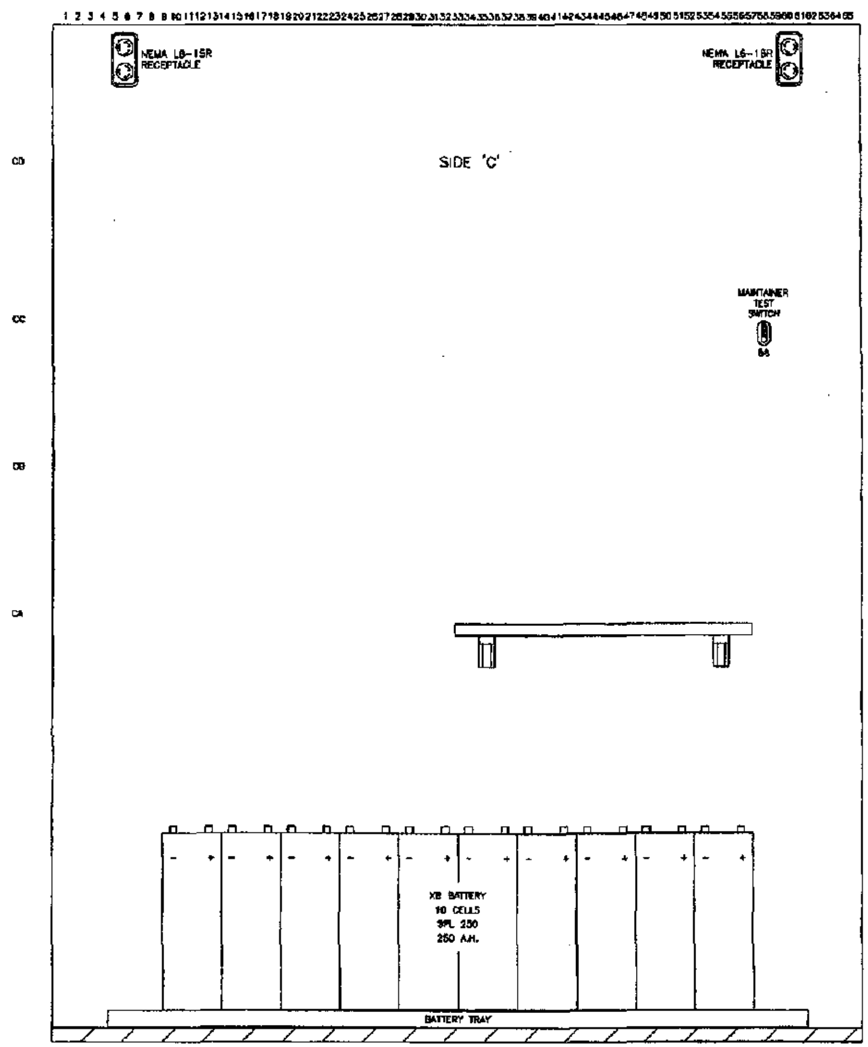

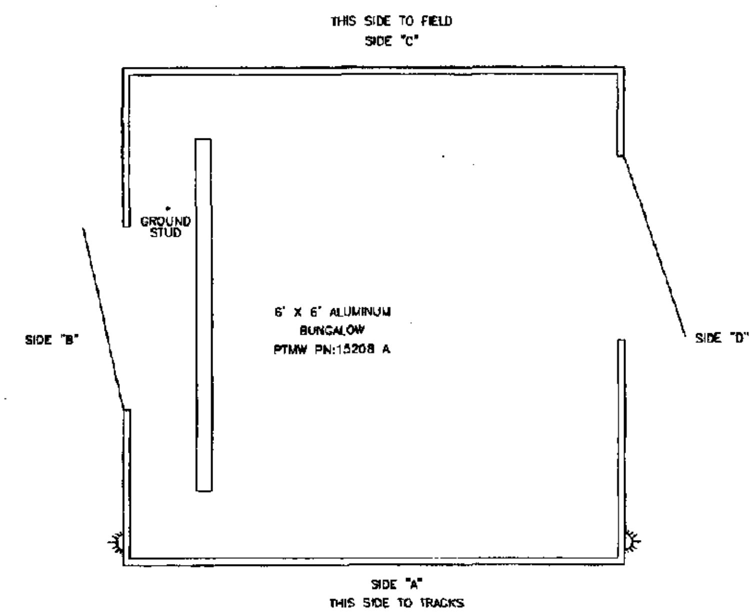

Wheeling & Lake Erie Railway

W&LE

LOCATION	AURORA ROAD/STATE ROUTE 82 TWINSBURG, OH		
ORIGINAL DATE 12/1/2010	TITLE SIDE "C"		
DESIGNER CTC	SUB CLEVELAND	CTC NO.	CT10171
DRAFTSMAN CTC	MP 0020.90	SCALE	1"=2'
CHECKER CTC	DOT NO. 472 889L	SHEET	18 OF 18

CHANGE FROM TYPICAL: N

REVISION BLOCK