36

FILE

Norfolk Southern Corporation
Communications and Signal Department
1200 Peachtree Street, N.E., Box 123
Atlanta, Georgia 30309

B. L. Sykes
Chief Engineer
C&S Engineering
404/529-2105

February 26, 2007
CX0118232

Ms. Susan Kirkland
Ohio DOT
1980 W. Broad St.
Columbus, OH 43223

06-1326-RR-FED

RE: Norfolk Southern's Cincinnati Line Regarding the Modification of Automatic Grade Crossing Warning Devices at Burt Street in Clark County, Ohio, DOT: 527 973K, Milepost CJ-181.80

Dear Ms. Kirkland:

Attached for our review and approval are copies of the detailed cost estimate, material list and engineering plans for this crossing.

Although we cannot give you an exact date of installation at this time we can provide our average installation time, which is 9.1 months after authorization from the state. After this project is authorized, we will order material and schedule for installation once we have received approvals from ODOT's district office.

If you have any questions, please call Mike Rappatta at 404-582-6377.

Sincerely,

B. L. Sykes

Enclosure(s)

BLS/rhr/gbb/mlr/rjs

e/cy: Mr. R. S. Noe, NS Corporation
Ms. Susan Arduini, ORDC
Mr. Tim Perkins, ORDC
Ms. Bonnie Johrendt, PUCO
Mr. George Martin, PUCO
Ms. P. A. Gray, NS Corporation

Cy: ✓ Docketing Division (w/plans, estimate and material list)

RECEIVED-DOCKETING DIV
2007 MAR -5 AM 10: 11
PUCO

This is to certify that the images appearing are an accurate and complete reproduction of a case file document delivered in the regular course of business
Technician _____ Date Processed 3.5.07

26-Feb-07

Detailed Estimate for Grade Crossing Warning Devices

City/State: SPRINGFIELD, OH
MilePost: CJ-181.8
State Proj. No.:
S&E Proj. No.: 10.0993
Man Days: 160

Road: BURT ST.
DOT/AAR: 527973K
County: CLARK
AFE: F10098
File Number: 061-10.1034

*****Purchases - Others*****		
Meals and Lodging:	$15,054.34	
Rental of Equipment:	$32,912.00	
(2 Trucks, 1 Backhoe w/ Trailer and 1 Pipe-Pusher for 40 Days)		
Construction Supervision Vehicle:	$2,632.96	
Purchases - Other Total:		$50,599.30
*****Material And Additives*****		
Material Cost:	$122,738.00	
Sales and Use Tax:	$0.00	
Material Handling Freight:	$6,136.89	
Material Total:		$128,874.89
*****Labor And Additives*****		
Labor Cost:	$38,720.00	
(4 man crew at $968.00 a day for: 40 days)		
Payroll Tax & Overheads:	$38,197.28	
Preliminary Engineering:	$14,208.28	
Construction Supervision:	$10,930.66	
Labor Total:		$102,056.22
	Project Cost:	$281,530.41
	Scrap / Salvage Credit:	$0.00
	Project Total:	**$281,530.41**

Estimated on: 26-Feb-07

Estimated by: n5s2v

Estimate valid for 1 year from date of estimate

Norfolk Southern Railway

Highway Crossing Signalization Program - Material List

Do not substitute items without permission from S & E Engineering

City:	SPRINGFIELD
Road:	BURT ST.
Mile Post:	CJ-181.8
Drawing Number:	82111818
State ProjectNumber:	
County:	CLARK
A A R Number:	527973K
Project Number:	10.0993
File Number:	061-10.1034
New File Number:	CX0118232
A F E Number:	F10098
Store Number:	
Supervisor:	D.M. FRANCIS
Tax Code:	3500

Vendor to supply the following copies after pricing:

1 Set - Material Management with original Invoice
2 Sets - with plans shipped in car with material
1 Set - S&EGen. Supt. Construction w/copy of invoice

Location: SPRINGFIELD OH S&E Proj. No.: 10.0993 AFE No.: F10098 Drawing No.: 82111818

Store No.: P.O.Number: Date Required: Date Shipped: Vendor: Interrail Engineering, INC

Qty.	Class-Item-CD	UI	Price per Item	Total Price	Item Description	Quantity Shipped	Quantity Installed Date Quan.	Date Quan.	Date Quan.	Quantity Returned (Credit)	Special Instructions
3	670-360693-4	EA	$5.04	$15.12	AAR/DOT NUMBER PLATE/DECAL, ORDER 3 PER PROJECT. 60 DAY LEAD TIME. SUPPLIED BY S'TRAN.						
1	165-006505-4	EA	$1,051.54	$1,051.54	AC SERVICE, COMPLETE LESS METER BASE, ASSEMBLED ON 30' POLE						
23	670-119241-4	EA	$32.80	$754.40	ARRESTOR, LIGHTNING HEAVY DUTY CLEAR VIEW SAFETRAN 022585-1X						
19	105-871901-4	EA	$161.57	$3,069.83	BATTERY,GNB 265AH MODEL 50A11 SINGLE CELL 2.25 VOLTS						
2	670-980689-4	EA	$71.71	$143.42	BRACKET HIGH WIND, (RIGID 3'), WIG- 191036, WALRUS TUSK TYPE						
2	670-561375-4	EA	$1,197.90	$2,395.80	BRACKET, GATE SAVER, NEG385102GS, SPRING LOADED SWING AWAY ADAPTER FOR FIBERGLASS/ALUMINUM GATES, USE WITH GATE 28' AND LESS						
1	670-356949-4	EA	$97.00	$97.00	CABLE, 10' GENERATOR HOOK UP, SERRMI P/N 40524. FEMALE CONNECTOR						
800	465-292862-4	LF	$1.04	$832.00	CABLE, U-2-6 TWISTED, S-23 OKONITE 113-12-3933 SOLID TINNED CONDUCTOR						
1000	465-292929-4	LF	$3.05	$3,050.00	CABLE, U.G. 5 COND. NO. 6 AWG SOLID COPPER CABLE TO MEET NS CORP. SPEC. FOR SIGNAL						
400	465-939422-4	LF	$2.55	$1,020.00	CABLE, UG 12 CONDUCTOR NO 14 AWG SOLID EACH CONDUCTOR WITH 5/64 IN INSULATION 10 MIL						
100	465-791835-4	FT	$2.22	$222.00	CABLE, UG AC ENTRANCE 3C#6-7X OKONITE FMPF-L 094-078 TR W/G 1 X 8 7X W010 BRZ TAPE 600V PRODUCT CODE 206-11-6070						
1	670-477629-4	EA	$552.20	$552.20	CHARGER, BATTERY CRAGG MODEL 20 EC-12V 20 AMP TEMP COMPENSATED						
310	165-544477-4	FT	$2.55	$790.50	CONDUIT, 4"x10' PVC, SCHEDULE 80 BELL CONNECTOR AT ONE END, 1/2 PT. GLUE IN KIT 670-123298-4						
6	670-090450-4	EA	$50.38	$302.28	CONNECTOR,WELDED FAR RAIL HARMON A1000-2W						
6	670-486646-4	EA	$41.62	$249.72	CONNECTOR,WELDED NEAR RAIL HARMON A1000-1W						
1	670-314147-4	EA	$2,045.47	$2,045.47	CONTROLLER, S.S.C. IIIA 20A SOLID STATE S'TRAN PART#9000-91165-0001						
2	670-794453-4	EA	$854.03	$1,708.06	COUNTERWEIGHT PKAGE, 25-31'GATE S'TAN S- MECH ONLY, STAINLESS TO INCLUDE HUB, SUPPORT ARMS						

APPROVED BY STATE	APPROVED BY RAILROAD	CAR NUMBER	SEAL NUMBER

Location: SPRINGFIELD OH S&E Proj. No.: 10.0993 AFE No.: F10098 Drawing No.: 82111818

Store No.: P.O.Number: Date Required: Date Shipped: Vendor: Interrail Engineering, INC

Qty.	Class-Item-CD	UI	Price per Item	Total Price	Item Description	Quantity Shipped	Quantity Installed Date Quan.	Date Quan.	Date Quan.	Quantity Returned (Credit)	Special Instructions
16	670-760012-4	EA	$40.02	$640.32	COVER, FOR 1 WAY FLASHING LIGHT ASSY. 18 OZ. BLACK VINYL COATED NYLON. ====TO COVER 2 LAMPS====						
1	670-986650-4	EA	$375.69	$375.69	DISPOSAL, CONSTRUCTION DEBRIS AND CLEANING X'ING EQUIPMENT CONTAINER						
1	670-007684-4	EA	$672.10	$672.10	DRIVER, TRACK, MODEL TD-4 ELECTRO PHEUMATIC CORP. FOUR OUTPUTS						
10	670-228165-4	EA	$10.73	$107.30	EQUALIZER, SAFETRAN 022700-1X LESS BASE, MODERN NO. 700-1 SHUNT ARRESTER TRACK CIRCUITS CR 02-197950						
1	670-000004-4	EA	$700.00	$700.00	FCC LICENSE FOR MONITOR/RADIO						
4	670-000003-4	EA	$255.85	$1,023.40	FILL/STONE #57, QUANITY IS BASED ON TRUCK LOAD PLUS DELIVERY COST						
2	670-744631-4	EA	$2,706.00	$5,412.00	FOUNDATION, CFLS FOR SAFETRAN MODEL "WT/F" ARMS 12' TO 30' SINGLE MAST, DIXIE# S-10-3WS-C, 5'10" CR 02-205902						
4	670-015231-4	EA	$423.50	$1,694.00	FOUNDATION,DIXIE,S-2 GATE 5'6" ASSEMBLED						
2	670-263738-4	EA	$331.87	$663.74	GATE, ARM FIBERGLASS-ALUMINUM 25-31 FT. INCLUDES GATE GUARD FOR GATE LIGHT CABLE, 076600-320017, NEG P/N 8002-4NFS/CG						
1	670-477991-4	EA	$317.90	$317.90	KIT, GROUNDING ASSY FOR AL I/S INCLUDES 8 GRD RDS,200'#4WIRE,12 4 WIRE ONE-SHOTS. ERICO SBK206						
1	670-123298-4	EA	$256.93	$256.93	KIT, HARDWARE SUPPLIES REQUIRED X'ING P'CKAGES. WEB CONNECTORS FOR SHUNT(8EA) TAPE, AMPS,P'GUM PAINT,SLEEVES,TAGS,GLUE, 100 EA WHITE TAGS,)NE CAN BLUE MARKING PAINT ETC...						
2	670-142763-4	EA	$849.42	$1,698.84	LAMP ASSY, 12" LIGHT, 2 WAY IND. FOR MTG ON THE TIP OF WT/F CANTILEVER ARM, SAFETRAN P/N 042003-488XNS						
2	670-724041-4	EA	$470.76	$941.52	LAMP ASSY, 12" MAST MTG., USE WITH W &WT/F MAST, 1W (BACK)(FRONT ON COMBO) IND. 20" BKGRD. FLX-12 W/BULB OLD S'TRAN# 042003-481XNS						
2	670-816589-4	EA	$551.10	$1,102.20	LAMP ASSY, 5" MAST MTG. 1W IND. 20" BKGRD, (BACK) LTS.FLX -12W/BULB S'TRAN # 042003-001493						
4	670-764166-4	EA	$907.65	$3,630.60	LAMP ASSY, 5" MAST MTG. 2W IND. 20" BKGRD, FLX-12 W/BULB S'TRAN #042003-487XNS						

APPROVED BY STATE	APPROVED BY RAILROAD	CAR NUMBER	SEAL NUMBER

Location: SPRINGFIELD OH S&E Proj. No.: 10.0993 AFE No.: F10098 Drawing No.: 82111818

Store No.: P.O.Number: Date Required: Date Shipped: Vendor: Interrail Engineering, INC

Qty.	Class-Item-CD	UI	Price per Item	Total Price	Item Description	Quantity Shipped	Quantity Installed Date Quan.	Date Quan.	Date Quan.	Quantity Returned (Credit)	Special Instructions
6	165-643547-4	EA	$4.30	$25.80	LAMP, 18 WATT 10 VOLT S-11 SC BAY 18S11/1SC CLEAR RWY SIGNAL UJ-71463 GE						
23	670-440826-4	EA	$1.01	$23.23	LINK, SAFETRAN 024620-1X INSL TESTING COMP 1 IN CENTER SIGNAL CIRCUITS CR 02-286662						
6	255-590880-4	EA	$16.12	$96.72	LOCK, AMERICAN LOCK MODEL H-10KA KEYED ALIKE TO PRIVATE KEYWAY D456 AND STAMPED "NS SIG"						
2	670-483458-4	EA	$6,525.00	$13,050.00	MAST CANTILEVER 12", WT/F GATE COMBO, 12'- 20' ARM, W/LADDER KIT W/RIGHT HAND OFFSET SAFTRAN P/N 071272-20NS						
4	670-637778-4	EA	$1,031.41	$4,125.64	MAST, 5" ALUMINUM 13'10" WITH DOUBLE JCT. BOX BASE. S'TRAN P# 070519-11AX.						
2	670-850933-4	EA	$3,352.65	$6,705.30	MECHANISM, GATE MODEL S-60, WITH DEFROSTER AND MINI TRACKSIDE SENSOR S'TRAN # 0740007-X002B3						
4	670-001355-4	EA	$72.59	$290.36	PACKAGE, HARDWARE SIGN 12 IN. (USE WITHWT/F MAST) MOUNTING, SERRMI A1250-8, HARMON @180004/0007,						
6	670-001347-4	EA	$63.27	$379.62	PACKAGE, HARDWARE SIGN 5 IN. MOUNTING, SERRMI A1250-5, HARMON @200965-000, OR						
1	670-644144-4	EA	$201.40	$201.40	PANEL, SAFETRAN# 91042-19 CABLE TERMINATION PANEL WITH 19 STRAPPED AAR TERMINALS						
4	670-514605-4	EA	$8.45	$33.80	PINNACLE, W-C SECT 1-11, 4"& 5" REF K1 110-8 OR SAFETRAN NO. @035045-503X						
6	670-555609-4	EA	$45.12	$270.72	PLUGBOARD, TYPE B-1 GRS A62-506 OR HARMON @7062-506 OR						
1	670-427136-4	EA	$93.49	$93.49	POWER OFF LAMP INDICATOR FOR SHELTER, SAFETRAN P/N 051958-5						
1	165-018451-4	EA	$148.50	$148.50	PROTECTOR, 12VDC, AAR MOUNT LPC 10593-9 LIGHTNING PROTECTION CORP.						
2	165-103293-4	EA	$62.43	$124.86	PROTECTOR, LIGHTNING & SURGE LPC 10560-51, 3 ELECTRODE WITH SPADE TERMINAL						
1	165-902002-4	EA	$308.00	$308.00	PROTECTOR, SURGE 120/240VAC, ERICO P/N EPD120/240TDFL						
4	670-602559-4	EA	$112.20	$448.80	RECTIFIER, ELECTRO-PNEUMATIC TRACK MODEL NO RING-10 TYPE C TRACK CIRCUIT						

APPROVED BY STATE	APPROVED BY RAILROAD	CAR NUMBER	SEAL NUMBER

Location: SPRINGFIELD OH S&E Proj. No.: 10.0993 AFE No.: F10098 Drawing No.: 82111818

Store No.: P.O.Number: Date Required: Date Shipped: Vendor: Interrail Engineering, INC

Qty.	Class-Item-CD	UI	Price per Item	Total Price	Item Description	Quantity Shipped	Quantity Installed Date Quan.	Date Quan.	Date Quan.	Quantity Returned (Credit)	Special Instructions
4	465-002899-4	EA	$22.06	$88.24	REEL, CABLE DISPOSABLE FOR CROSSING SIGNAL PACKAGES						
1	670-742096-4	EA	$41.80	$41.80	RELAY INTERFACE PROBE, ULTRATECH PN 16031-00						
4	670-456936-4	EA	$150.00	$600.00	RELAY RACK, SWING, FARADAY SHELTER FOR ONE RELAY, SSFETRAN P/N T15331						
2	670-707995-4	EA	$313.67	$627.34	RELAY, TYPE B1, NEV LINE, 900 OHMS,.008 AMPERES GRS A62-308 OR SAFETRAN @400003						
3	670-708018-4	EA	$353.18	$1,059.54	RELAY, TYPE B1, NEV LINE, H.D. CONTACTS, 900 OHMS, .008 AMPERES GRS A62-311, SAFETRAN @400022						
1	670-708282-4	EA	$317.25	$317.25	RELAY, TYPE B1, TRACK 4 OHM .85A GRS A62-276, S'TRAN 400011						
1	670-215166-4	EA	$21.98	$21.98	RELAY,(AC INTERRUPT FOR SEARII)POTTER & BRUMFIELD 120V AC KUMP-14A18-120 SAFETRAN P/N T18354						
2	670-218934-4	EA	$20.62	$41.24	RELAY,(AC INTERRUPT FOR SEARII)POTTER & BRUMFIELD 12V DC KUMP-14D18-12 SAFETRAN P/N T18353						
6	670-790627-4	EA	$23.45	$140.70	RESISTOR ADJUSTABLE 0.63 OHM MINIMUM RESIST 0.068-OHM, ITEM 248 S-500 SAFETRAN P/N 029602-1X						
1	180-000029-4	EA	$20.83	$20.83	RESISTOR UNIT, 2W ADJUSTABLE SAFETRAN NO. 029602-6X FOR TRACK CIRCUITS CR 02-425807						
1	180-239123-4	EA	$20.83	$20.83	RESISTOR, ADJUSTABLE 5 OHM SAFETRAN NO. 029603-2X FOR TRACK CIRCUITS						
1	670-213353-4	EA	$5,557.79	$5,557.79	SCX-1, EPC CONFIG."A". FOR 3 TK. TYPE "C" TRACK SYSTEMS, PLUS EXTRA ISLAND						
1	670-816502-4	EA	$4,903.75	$4,903.75	SEARII AUTOMATED INSPECTOR SYSTEM KIT, w/ 1-iLOD,1-eBELL, 2-GTS, WITHOUT MTSS, 1-GFT,1-VHFC, 2- RECORDER INTERFACE MODULE, 1-ECHELON CONNECTOR						
1	670-111783-4	EA	$516.00	$516.00	SEARII, (GFT) - GROUND FAULT DETECTOR, SAFETRAN P/N A80297, 1 PER TWO SETS OF BATTERY						
2	670-085658-4	EA	$373.00	$746.00	SEARII, (iLOD) - INTELLIGENT LAMP OUT DETECTOR, SAFETRAN P/N A80271, 1 / 20 AMP SSCC , 2 / 40 AMP SSCC						

APPROVED BY STATE	APPROVED BY RAILROAD	CAR NUMBER	SEAL NUMBER

Location: SPRINGFIELD OH S&E Proj. No.: 10.0993 AFE No.: F10098 Drawing No.: 82111818

Store No.: P.O.Number: Date Required: Date Shipped: Vendor: Interrail Engineering, INC

Qty.	Class-Item-CD	UI	Price per Item	Total Price	Item Description	Quantity Shipped	Quantity Installed Date Quan.	Date Quan.	Date Quan.	Quantity Returned (Credit)	Special Instructions
1	670-281280-4	EA	$7,006.00	$7,006.00	SHELTER BARE 6X6, ALUMN, FARADAY, W/CABLE CHUTES BEHIND TERMINAL BOARD, W/GEN. CONN. W/ADJUSTABLE PIERS, ,SAFTETRAN P/N 058400-66-78A						
6	670-586967-4	EA	$37.68	$226.08	SHUNT COVER W/LAG SCREWS, 19"X19", SERRMI #40271, ORDER 1 PER SHUNT						
4	670-652773-4	EA	$470.56	$1,882.24	SHUNT, MULTI-FREQ. #62775-1543 SAFETRAN NARROW BAND						
2	670-393331-4	EA	$37.43	$74.86	SIGN CROSSING MALFUNCTION ASSEMBLY FOR 4" AND 5" MAST, SAFETRAN #T17215						
6	670-806648-4	EA	$56.42	$338.52	SIGN, X-BUCK, LESS HARDWARE, SAFETRAN 035200-X CR 02-490546						
2	670-353390-4	EA	$43.04	$86.08	SIGN, "2 TRACKS" LESS HARDWARE SAFETRAN 035207-2X						
2	670-803355-4	EA	$32.01	$64.02	SIGN, "3" TRACK, LESS HARDWARE POWER PARTS						
1	670-330382-4	RL	$15.68	$15.68	TAPE, THOR 3" DURATEC, ORANGE 1000' LENGTHS. "WARNING STOP DIGGING"						
23	670-478560-4	EA	$19.47	$447.81	TERMINAL BLOCK, ERICO 4 POST P/N B2700A2C1WH W/HARDWARE LESS LIGHTNING ARRESTOR						
6	610-065626-4	EA	$17.55	$105.30	ULTRA-TECH 15206-01 CONNECTIVITY BLOCK FOR GRS B1 RELAY						
6	670-007238-4	EA	$129.46	$776.76	UNIT, THE INSTALLATION AND WIRING OF A DEVICE WHICH REQUIRE A MINIMUM OF FOUR WIRE CONNECT-						
1	670-255598-4	EA	$33,124.18	$33,124.18	WIRED RACK, 6X6 FARADAY, 40AMP DOUBLE TRK SSCCIIIA, GCP 3000D2, 2 CRAGG CHARGER, 2 RELAY RACKS, SAFTRAN P/N 40A 2TRK, USE WITH I/S 670-281280-4 W/CABLE CHUTES BEHIND THE FARADAY SHIELD						
1	450-986008-4	EA	$24.84	$24.84	WRENCH, TEST POST TYPE B DWG 55393-3, GR.1						

Total Material: $122,737.78

APPROVED BY STATE	APPROVED BY RAILROAD	CAR NUMBER	SEAL NUMBER

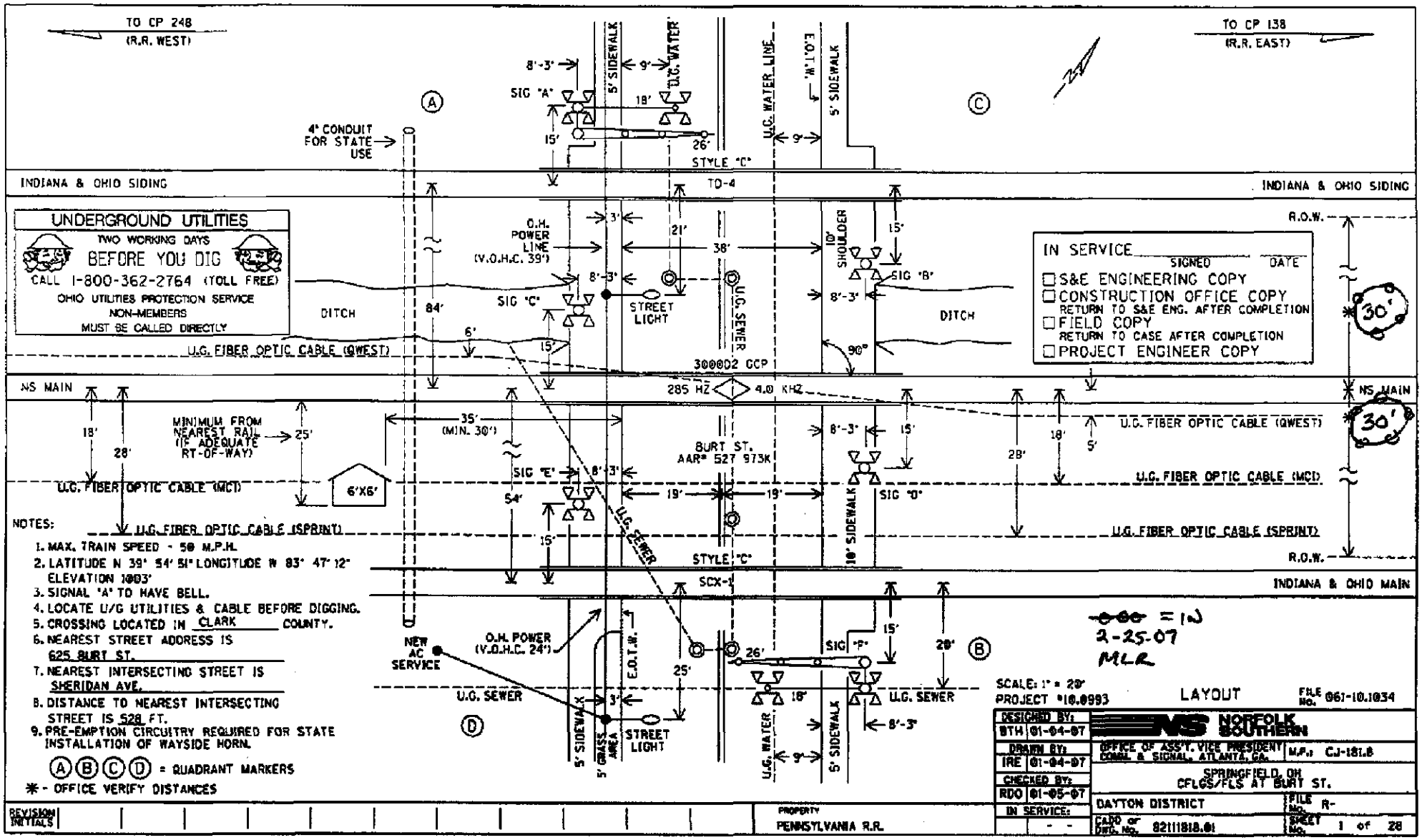

NOTES:

1. MAX. TRAIN SPEED - 50 M.P.H.
2. LATITUDE N 39° 54' 51" LONGITUDE W 83° 47' 12" ELEVATION 1003'
3. SIGNAL 'A' TO HAVE BELL.
4. LOCATE U/G UTILITIES & CABLE BEFORE DIGGING.
5. CROSSING LOCATED IN CLARK COUNTY.
6. NEAREST STREET ADDRESS IS 625 BURT ST.
7. NEAREST INTERSECTING STREET IS SHERIDAN AVE.
8. DISTANCE TO NEAREST INTERSECTING STREET IS 528 FT.
9. PRE-EMPTION CIRCUITRY REQUIRED FOR STATE INSTALLATION OF WAYSIDE HORN.

Ⓐ Ⓑ Ⓒ Ⓓ = QUADRANT MARKERS

✱ - OFFICE VERIFY DISTANCES

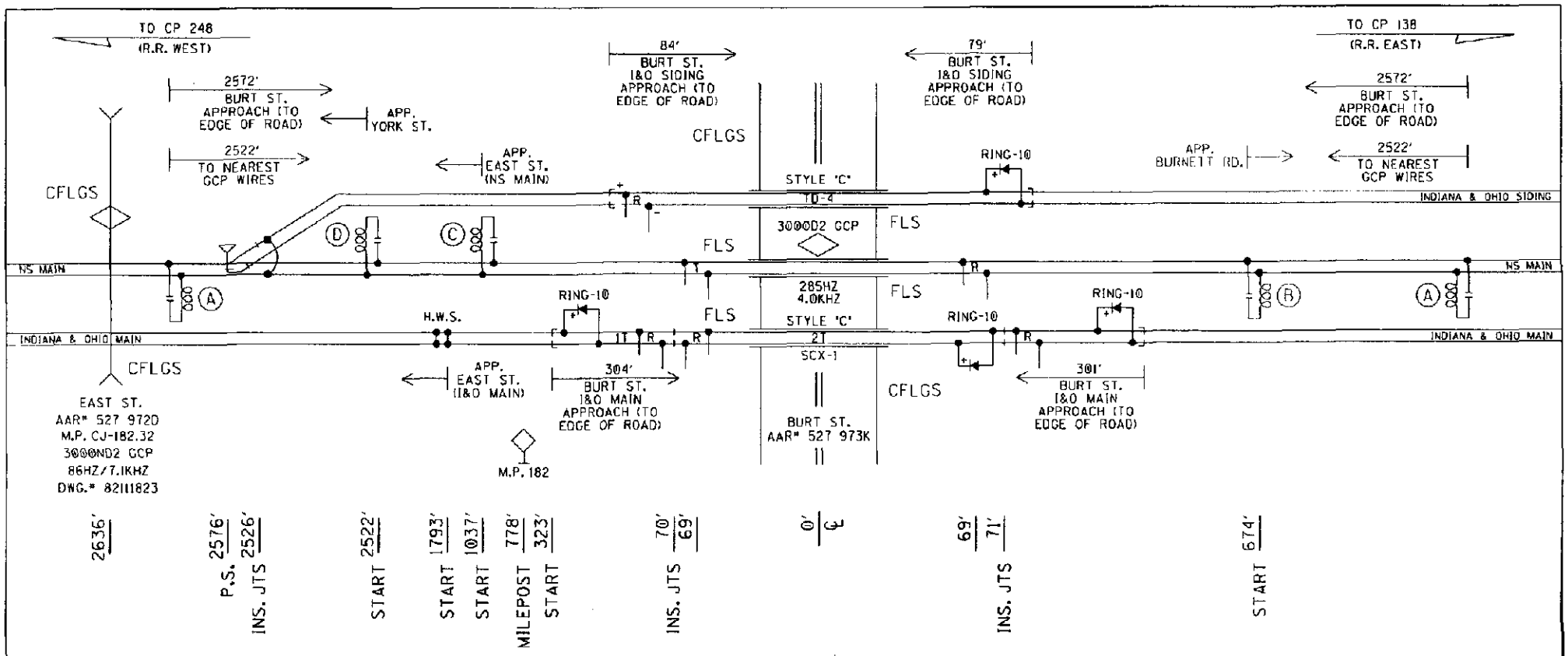

(A)- MF-NBS 62775-1543 (285HZ)

(B)- MF-NBS 62775-1543 (156HZ)
(PROPOSED FREQUENCY)

(C)- NBS (86 HZ)

(D)- NBS (392HZ)

PROFILE

DESIGNED BY: BTH 01-04-07	NORFOLK SOUTHERN		
DRAWN BY: IRE 01-04-07	OFFICE OF ASS'T. VICE PRESIDENT COMM. & SIGNAL, ATLANTA, GA.	M.P.: CJ-181.8	
CHECKED BY: RDO 01-05-07	SPRINGFIELD, OH CFLGS/FLS AT BURT ST.		
IN SERVICE: - -	DAYTON DISTRICT	FILE No. R-	
	CADD or DWG. No. 82111818.02	SHEET No. 2 of 28	

REVISION INITIALS

PROPERTY
PENNSYLVANIA R.R.

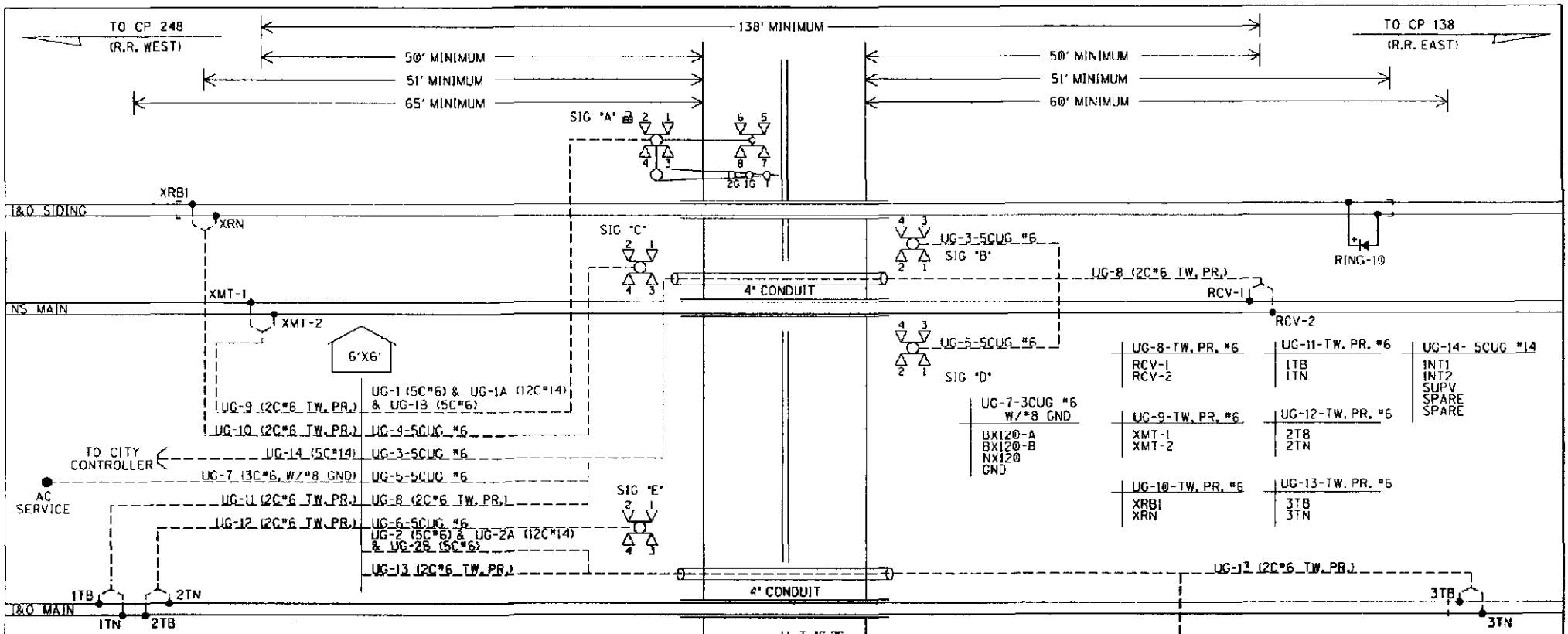

CABLE PLAN

DESIGNED BY: BTH 01-04-07	NORFOLK SOUTHERN	
DRAWN BY: IRE 01-04-07	OFFICE OF ASS'T. VICE PRESIDENT COMM. & SIGNAL, ATLANTA, GA.	M.P.: CJ-181.8
CHECKED BY: RDO 01-05-07	SPRINGFIELD, OH CFLGS/FLS AT BURT ST.	
IN SERVICE: - -	DAYTON DISTRICT	FILE No. R-
	CADD or DWG. No. B2111818.03	SHEET No. 3 of 28

REVISION INITIALS

PROPERTY
PENNSYLVANIA R.R.

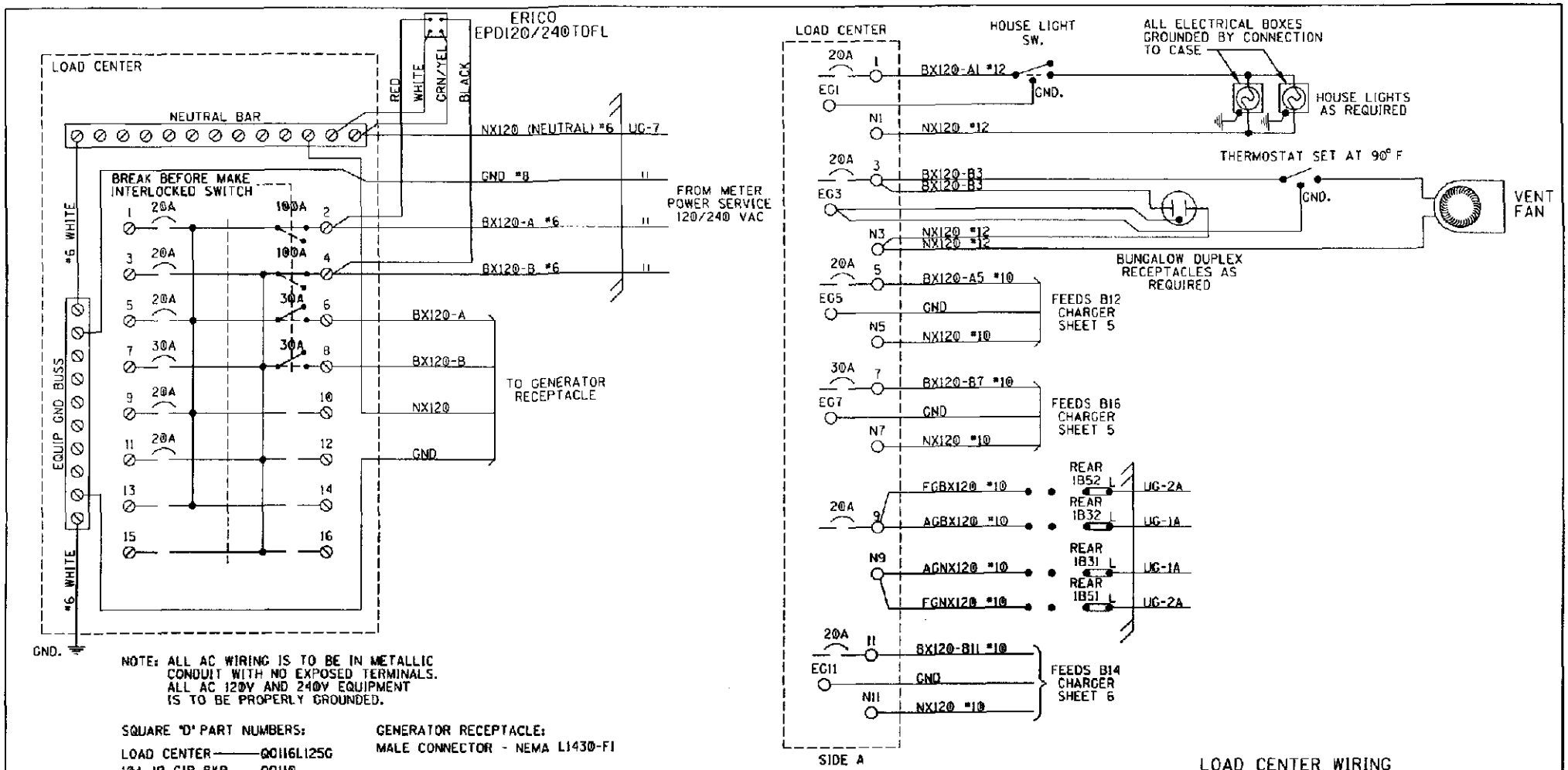

NOTE: ALL AC WIRING IS TO BE IN METALLIC CONDUIT WITH NO EXPOSED TERMINALS. ALL AC 120V AND 240V EQUIPMENT IS TO BE PROPERLY GROUNDED.

SQUARE 'D' PART NUMBERS:

LOAD CENTER——QO116L125G
10A 1P CIR BKR——QO110
20A 1P CIR BKR——QO120
30A 1P CIR BKR——QO130
30A 2P CIR BKR——QO230
60A 2P CIR BKR——QO260
100A 2P CIR BKR——QO2100
MECH INTERLOCK——PK4DTIM4LA

GENERATOR RECEPTACLE:
MALE CONNECTOR - NEMA L1430-FI

LOAD CENTER WIRING

DESIGNED BY: BTH 01-04-07	NORFOLK SOUTHERN	
DRAWN BY: IRE 01-04-07	OFFICE OF ASS'T. VICE PRESIDENT COMM. & SIGNAL, ATLANTA, GA.	M.P.: CJ-181.8
CHECKED BY: RDO 01-05-07	SPRINGFIELD, OH CFLGS/FLS AT BURT ST.	
IN SERVICE: - -	DAYTON DISTRICT	FILE No. R-
	CADD or DWG. No. 8211818.04	SHEET No. 4 of 28

REVISION INITIALS

PROPERTY
PENNSYLVANIA R.R.

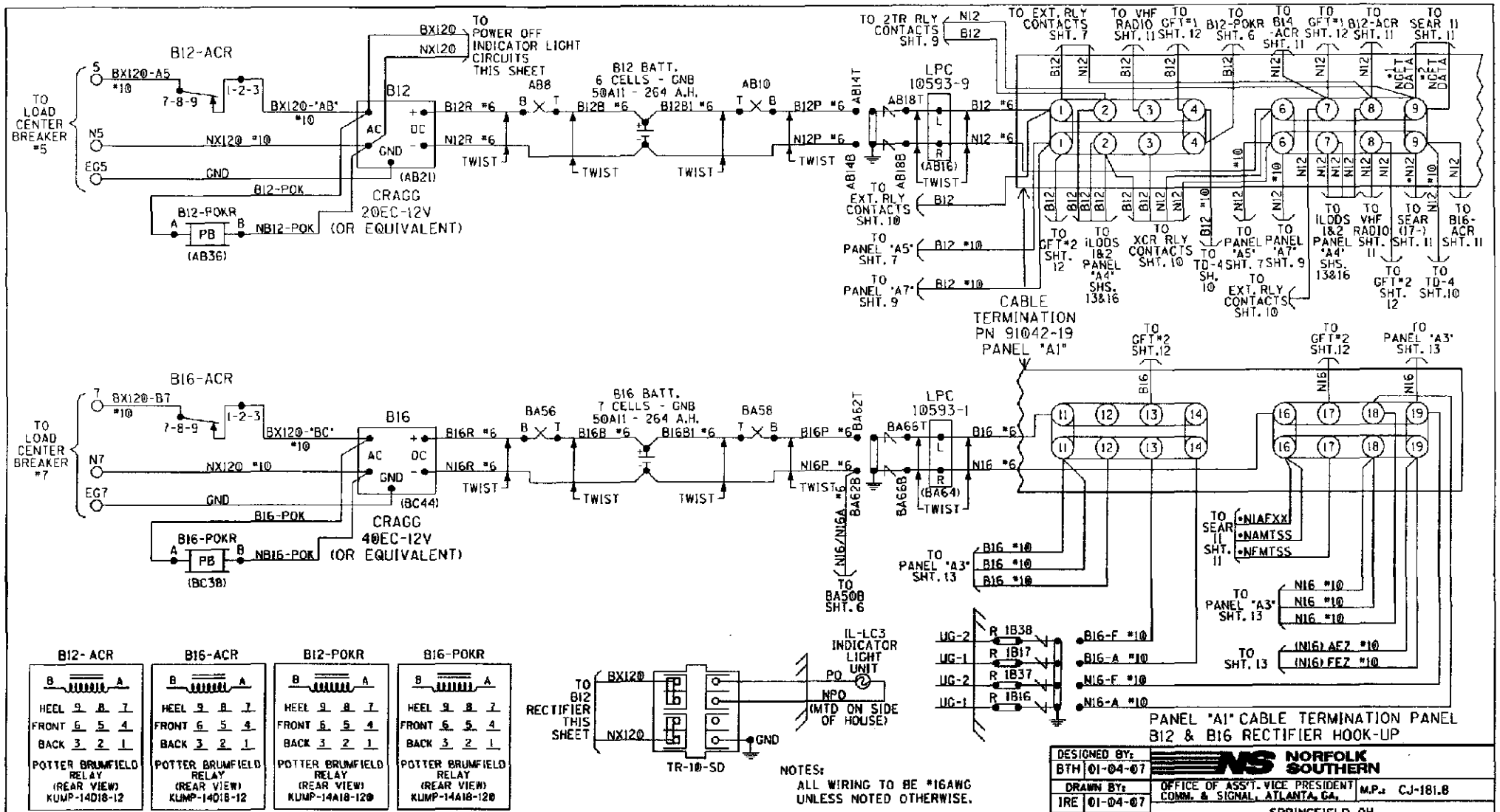

NOTES:
ALL WIRING TO BE #16AWG UNLESS NOTED OTHERWISE.
• = CABLE PROVIDED WITH SEAR II

DESIGNED BY: BTH 01-04-07	NORFOLK SOUTHERN
DRAWN BY: IRE 01-04-07	OFFICE OF ASS'T. VICE PRESIDENT COMM. & SIGNAL, ATLANTA, GA. — M.P.: CJ-181.8
CHECKED BY: RDO 01-05-07	SPRINGFIELD, OH CFLGS/FLS AT BURT ST.
IN SERVICE: - -	DAYTON DISTRICT — FILE No. R-
	CADD or DWG. No. 82111818.05 — SHEET No. 5 of 28

REVISION INITIALS

PROPERTY PENNSYLVANIA R.R.

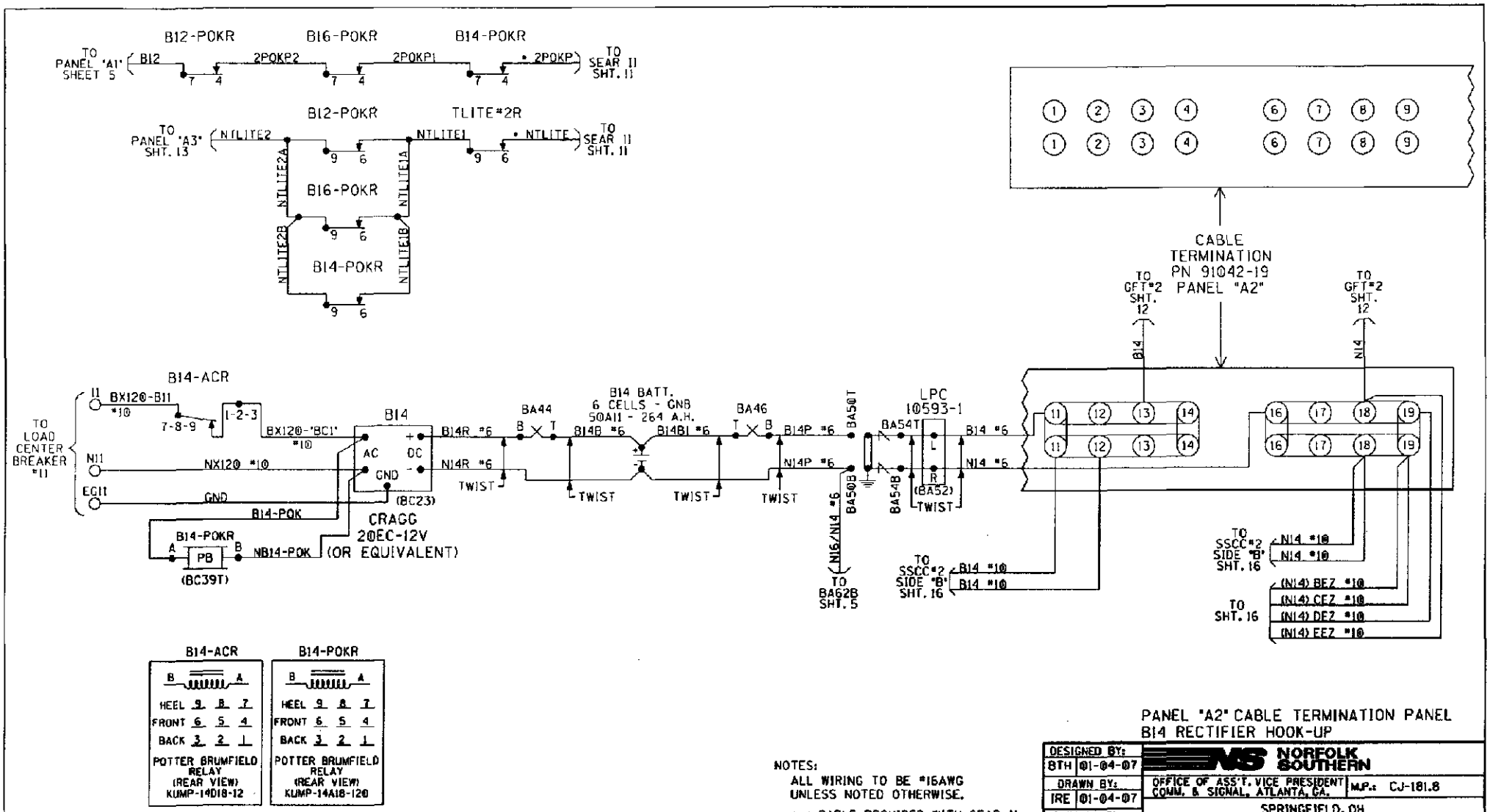

NOTES:
ALL WIRING TO BE #16AWG UNLESS NOTED OTHERWISE.
* = CABLE PROVIDED WITH SEAR II

PANEL "A2" CABLE TERMINATION PANEL
B14 RECTIFIER HOOK-UP

DESIGNED BY: BTH 01-04-07	NORFOLK SOUTHERN
DRAWN BY: IRE 01-04-07	OFFICE OF ASS'T. VICE PRESIDENT COMM. & SIGNAL, ATLANTA, GA. — M.P.: CJ-181.8
CHECKED BY: RDO 01-05-07	SPRINGFIELD, OH CFLGS/FLS AT BURT ST.
IN SERVICE: - -	DAYTON DISTRICT — FILE No. R-
	CADD or DWG. No. 82111818.06 — SHEET No. 6 of 28

REVISION INITIALS									

PROPERTY
PENNSYLVANIA R.R.

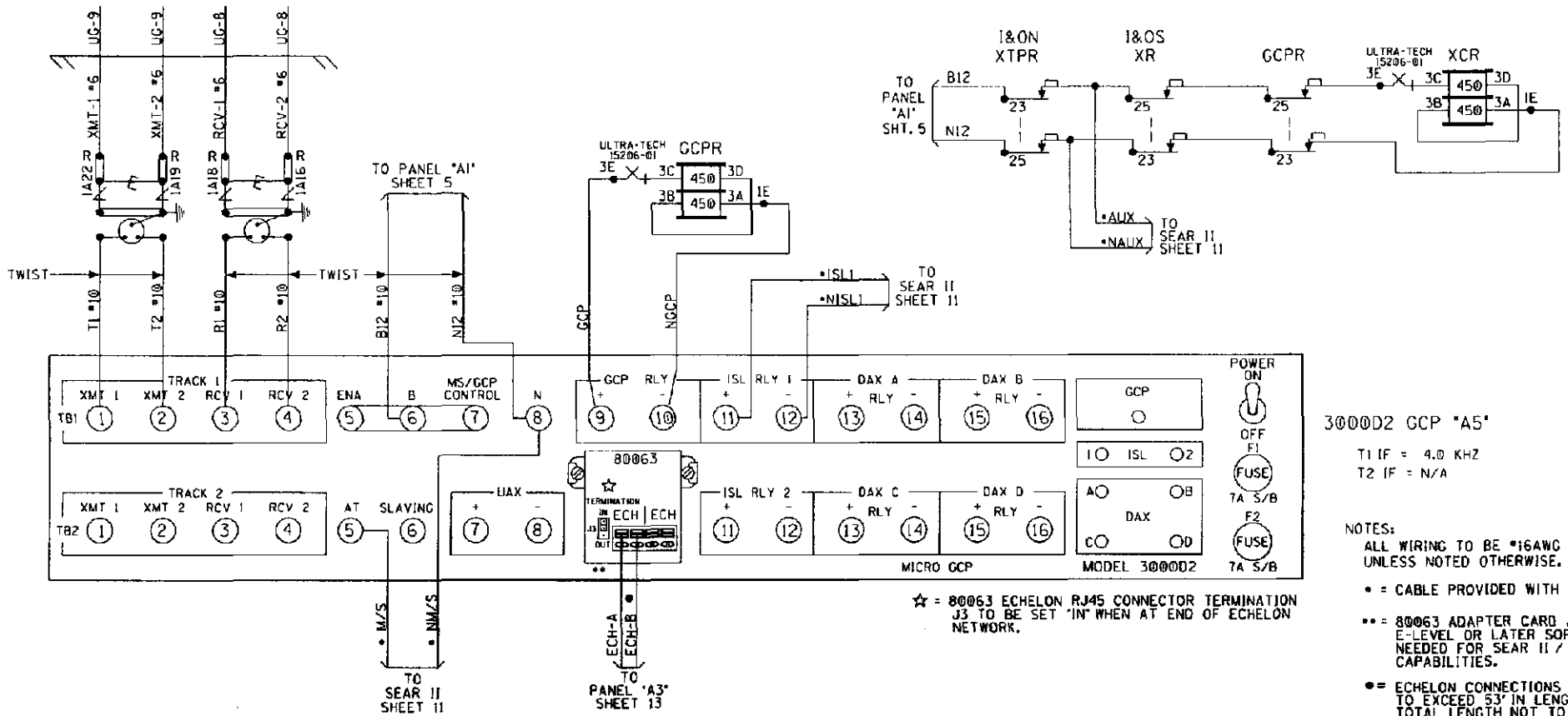

3000D2 GCP "A5"

T1 IF = 4.0 KHZ
T2 IF = N/A

☆ = 80063 ECHELON RJ45 CONNECTOR TERMINATION J3 TO BE SET "IN" WHEN AT END OF ECHELON NETWORK.

NOTES:
ALL WIRING TO BE #16AWG UNLESS NOTED OTHERWISE.

• = CABLE PROVIDED WITH SEAR II

•• = 80063 ADAPTER CARD AND E-LEVEL OR LATER SOFTWARE NEEDED FOR SEAR II / ECHELON CAPABILITIES.

•= ECHELON CONNECTIONS NOT TO EXCEED 53' IN LENGTH AND TOTAL LENGTH NOT TO EXCEED 430' WITH A MAXIMUM OF 8 NODES, RECOMMEND USE BELDEN WIRE CABLE #8461 OR EQUIVALENT.

PANEL "A5" 3000D2 GCP HOOK-UP

DESIGNED BY: BTH 01-04-07	NORFOLK SOUTHERN	
DRAWN BY: IRE 01-04-07	OFFICE OF ASS'T. VICE PRESIDENT COMM. & SIGNAL, ATLANTA, GA.	M.P.: CJ-181.8
CHECKED BY: RDO 01-05-07	SPRINGFIELD, OH CFLGS/FLS AT BURT ST.	
IN SERVICE: - -	DAYTON DISTRICT	FILE No. R-
	CADD or DWG. No. 82111818.07	SHEET No. 7 of 28

REVISION INITIALS

PROPERTY
PENNSYLVANIA R.R.

3000D2 PROGRAMMING CHART	(LEVEL: J)
NUMBER OF TRACK TRANSCEIVERS	1
T1: FREQUENCY	285Hz
T2: FREQUENCY	---Hz
T1: UNIDIRECTIONAL/BIDIRECTIONAL	BI
T2: UNIDIRECTIONAL/BIDIRECTIONAL	---
T1: XMIT LEVEL (MAX/MED)	MED
T2: XMIT LEVEL (MAX/MED)	---
T1: PREDICTOR/MOTION SENSOR	PRED
T2: PREDICTOR/MOTION SENSOR	----
T1: WARNING TIME	30 Sec
T2: WARNING TIME	-- Sec
T1: APPROACH DISTANCE	2522 Ft
T2: APPROACH DISTANCE	---- Ft
UAX1 PICKUP DELAY (UAX) (0 = OFF)	0 Sec
ENA/UAX2 DELAY (0 = ENA)	-- Sec
T1: ISLAND DISTANCE	139 Ft
T2: ISLAND DISTANCE	--- Ft
NUMBER OF DAX'S	0 Ea
DAX A TRACK ASSIGNMENT (T1/T2)	---
DAX A DISTANCE (0 = PREEMPT)	Ft
DAX A WARNING TIME	Sec
DAX B TRACK ASSIGNMENT (T1/T2)	---
DAX B DISTANCE (0 = PREEMPT)	Ft
DAX B WARNING TIME	Sec
DAX C TRACK ASSIGNMENT (T1/T2)	---
DAX C DISTANCE (0 = PREEMPT)	Ft
DAX C WARNING TIME	Sec
DAX D TRACK ASSIGNMENT (T1/T2)	---
DAX D DISTANCE (0 = PREEMPT)	Ft
DAX D WARNING TIME	Sec
SLAVING (MASTER/SLAVE)	MASTER
PASSWORD ENABLED	NO
RECORDER INSTALLED	NO

EXPANDED PROGRAMMING

T1: SWITCH TO MS (ENTER EZ VALUE)	10 %	
T2: SWITCH TO MS (ENTER EZ VALUE)	-- %	
T1: TRANSFER DELAY MS TO GCP (0 = OFF)	0 Sec	
T2: TRANSFER DELAY MS TO GCP (0 = OFF)	-- Sec	
T1: TRANSFER MS TO GCP PRIME (ON/OFF)	---	(1)
T2: TRANSFER MS TO GCP PRIME (ON/OFF)	---	(1)
T1: TRANSFER MS TO GCP DAX A (ON/OFF)	---	(2)
T2: TRANSFER MS TO GCP DAX A (ON/OFF)	---	(2)
T1: TRANSFER MS TO GCP DAX B (ON/OFF)	---	(2)
T2: TRANSFER MS TO GCP DAX B (ON/OFF)	---	(2)
T1: TRANSFER MS TO GCP DAX C (ON/OFF)	---	(2)
T2: TRANSFER MS TO GCP DAX C (ON/OFF)	---	(2)
T1: TRANSFER MS TO GCP DAX D (ON/OFF)	---	(2)
T2: TRANSFER MS TO GCP DAX D (ON/OFF)	---	(2)
T1: PRIME PREDICTION OFFSET (0 = OFF)	0 Ft	
T2: PRIME PREDICTION OFFSET (0 = OFF)	-- Ft	
PICKUP DELAY PRIME	15 Sec	
PICKUP DELAY DAX A	-- Sec	
PICKUP DELAY DAX B	-- Sec	
PICKUP DELAY DAX C	-- Sec	
PICKUP DELAY DAX D	-- Sec	
T1: ENHANCED DETECTION (ON/OFF)	OFF	
T2: ENHANCED DETECTION (ON/OFF)	---	
BACK-TO-BACK T1 AND T2 (NO/YES)	---	(3)
T1: STATION STOP TIMER	10 Sec	(3)
T2: STATION STOP TIMER	-- Sec	(3)
T1: NUMBER OF TRACK WIRES (4/6)	4	
T2: NUMBER OF TRACK WIRES (4/6)	-	
T1: LOW EX ADJUSTMENT	0	
T2: LOW EX ADJUSTMENT	--	
T1: LOW EZ DETECTION	OFF	
T2: LOW EZ DETECTION	---	
T1: LOW EZ DETECTION TIMER (ON/OFF)	10 Min	(4)
T2: LOW EZ DETECTION TIMER (ON/OFF)	-- Min	(4)
T1: POSITIVE START (EZ LEVEL) (0 = OFF)	0	
T2: POSITIVE START (EZ LEVEL) (0 = OFF)	--	
T1: POSITIVE START TIMEOUT (0 = NONE)	-- Min	(5)
T2: POSITIVE START TIMEOUT (0 = NONE)	-- Min	(5)
SET AT OPERATION (NORMAL/DIAGNOSTIC)	NORMAL	
DIAGNOSTIC MESSAGES (ON/OFF)	ON	
DAX MESSAGES (ON/OFF)	ON	
ADVANCE PREEMPT TIMER (0 = OFF)	0	
T1: MOTION SENSING LEVEL (0 = NORMAL)	0 %	
T2: MOTION SENSING LEVEL (0 = NORMAL)	-- %	

✳ = 1ST SLOT AT LEFT END OF BAY

MODEL 3000D2 GCP MODULE ASSEMBLIES

	UPPER BAY										LOWER BAY										
MODULES POSITION	M1	M2	M3	M4	M5	M6	M7	M8	M9	M10	M11	M12	M13	M14	M15	M16	M17	M18	M19	M20	M21
MODULE NUMBERS	80211-4.0KHZ(1)✳	80211-f(2) ISL	80012 T/R 1	80012 T/R 2	80013 RLY DRV	80214 PROCS	80255 REC-INTF	80016 (1) DAX	80016 (2) DAX	80020 +80017	80211-4.0KHZ(1)✳	80211-f(2) ISL	80012 T/R 1	80012 T/R 2	80013 RLY DRV	80214 PROCS	80255 REC-INTF	80016 (1) DAX	80016 (2) DAX	80020 +80017	80028 XFRTMR
MODULES USED	X		X		X	X	X			X	X		X		X	X	X			X	X
							••										••				

NOTES:

1 - SEE IPI INSTRUCTION AND INSTALLATION MANUAL FOR 80211 ISLAND CALIBRATION PROCEDURE.

2 - TOGGLE SWITCH ON MOTHER BOARD:
UP = DUAL FREQ.
DOWN = SINGLE FREQ.

•• = 80214 & 80255 (WITH JUMPER) CARDS AND E-LEVEL OR LATER SOFTWARE NEEDED FOR SEAR II / ECHELON CAPABILITIES.

3000D2 PROGRAMMING NOTES:

1) AVAILALBE WHEN "TRANSFER DELAY MS TO GCP" AND "PRIME PREDICTION OFFSET" IS ON
2) AVAILABLE WHEN "TRANSFER DELAY MS TO GCP" AND DAX DISTANCE IS GREATER THAN ZERO
3) AVAILABLE WHEN "ENHANCED DETECTION" IS ON
4) AVAILABLE WHEN "LOW EZ DETECTION" IS ON
5) AVAILABLE WHEN "POSITIVE START" IS ON

PANEL "A5" 3000D2 GCP SET-UP

DESIGNED BY: BTH 01-04-07	NORFOLK SOUTHERN	
DRAWN BY: IRE 01-04-07	OFFICE OF ASS'T. VICE PRESIDENT COMM. & SIGNAL, ATLANTA, GA.	M.P.: CJ-181.8
CHECKED BY: RDO 01-05-07	SPRINGFIELD, OH CFLGS/FLS AT BURT ST.	
IN SERVICE: - -	DAYTON DISTRICT	FILE No. R-
	CADD or DWG. No. 82111818.08	SHEET No. 8 of 28

REVISION INITIALS										

PROPERTY
PENNSYLVANIA R.R.

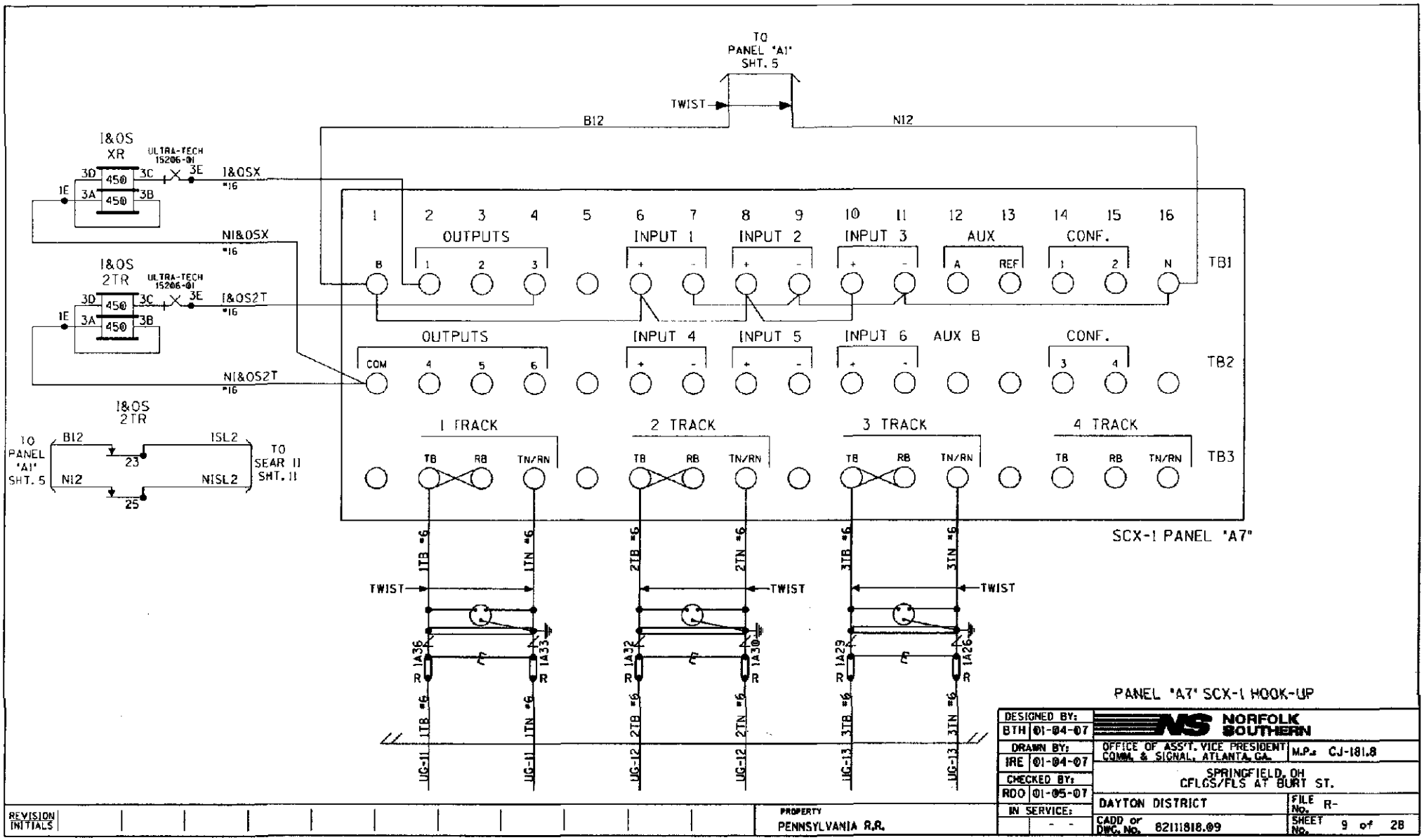

PANEL 'A7' SCX-1 HOOK-UP

DESIGNED BY: BTH 01-04-07	NORFOLK SOUTHERN
DRAWN BY: IRE 01-04-07	OFFICE OF ASS'T. VICE PRESIDENT COMM. & SIGNAL, ATLANTA, GA. — M.P.: CJ-181.8
CHECKED BY: RDO 01-05-07	SPRINGFIELD, OH CFLGS/FLS AT BURT ST.
IN SERVICE: - -	DAYTON DISTRICT — FILE No. R-
	CADD or DWG. No. 82111818.09 — SHEET No. 9 of 28

REVISION INITIALS

PROPERTY PENNSYLVANIA R.R.

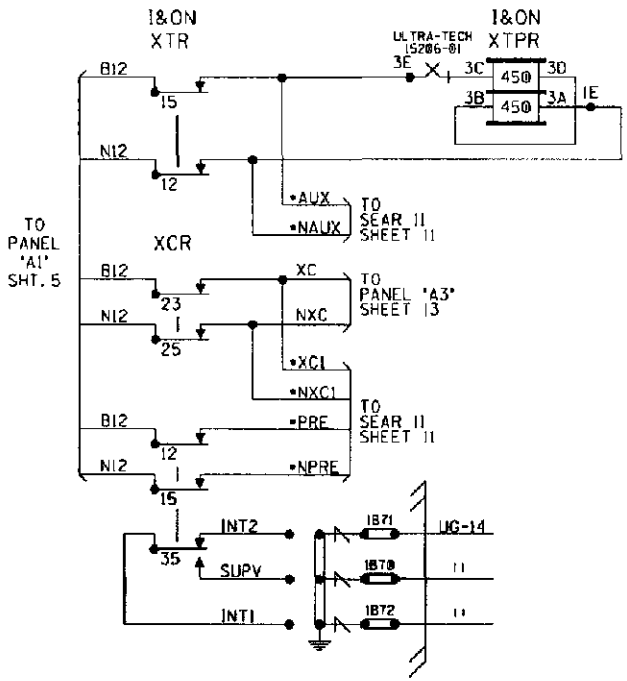

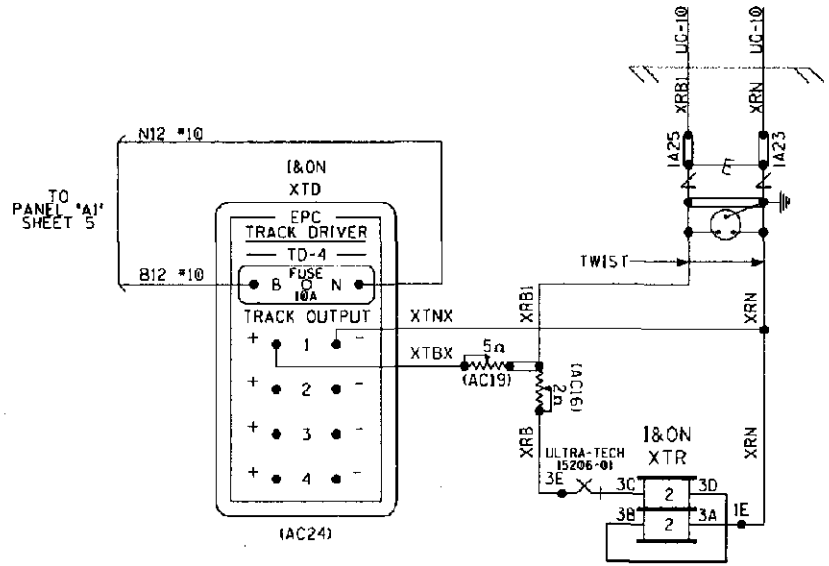

STYLE "C" & EXTERNAL RELAY CIRCUITS

• = CABLE PROVIDED WITH SEAR II

DESIGNED BY: GTH 01-04-07	NORFOLK SOUTHERN		
DRAWN BY: IRE 01-04-07	OFFICE OF ASS'T. VICE PRESIDENT COMM. & SIGNAL, ATLANTA, GA.	M.P.: CJ-181.8	
CHECKED BY: RDO 01-05-07	SPRINGFIELD, OH CFLGS/FLS AT BURY ST.		
IN SERVICE: - -	DAYTON DISTRICT	FILE No. R-	
	CADD or DWG. No. 82111818.10	SHEET No. 10 of 28	

REVISION INITIALS									

PROPERTY
PENNSYLVANIA R.R.

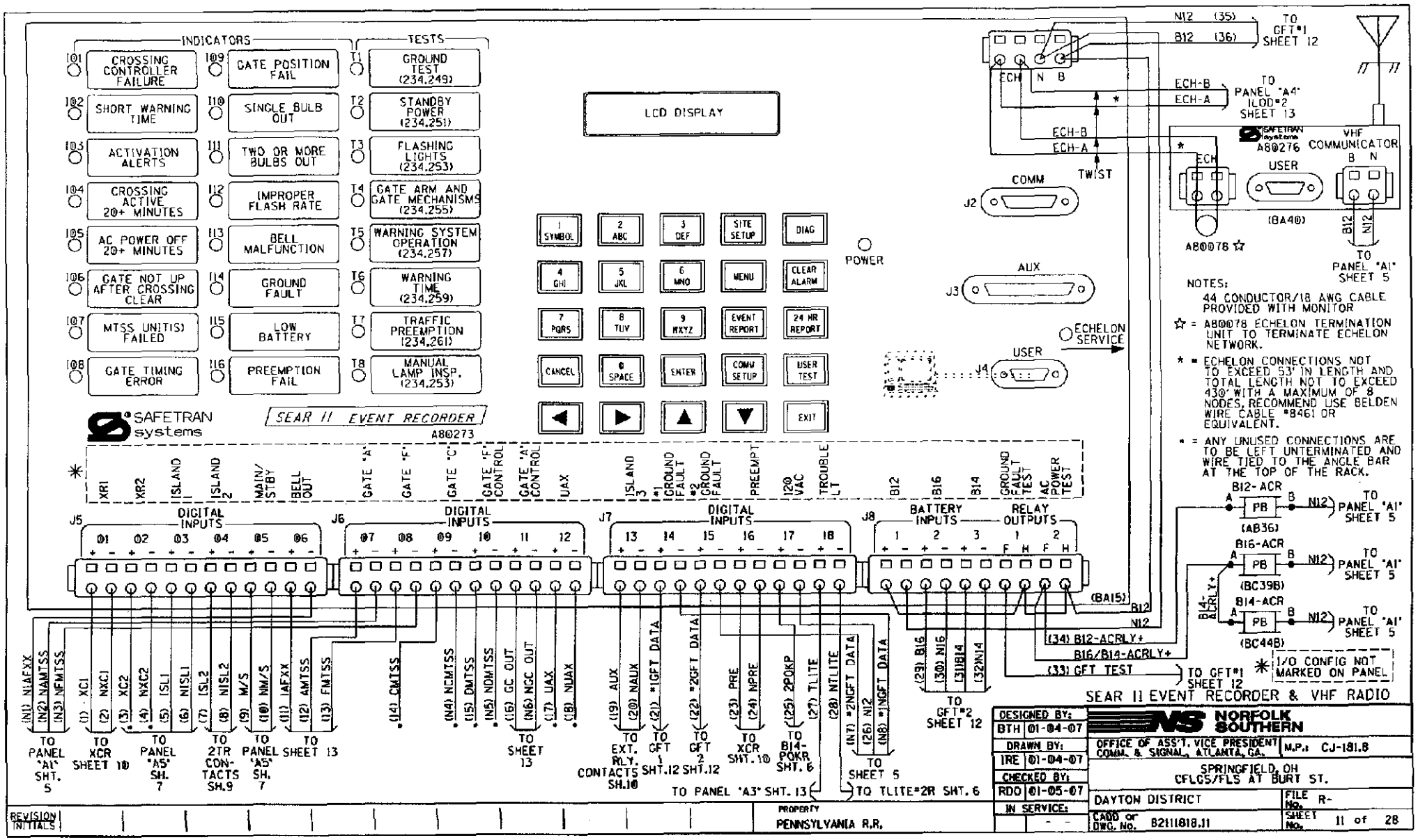
INDICATORS
TESTS
I01 CROSSING CONTROLLER FAILURE
I02 SHORT WARNING TIME
I03 ACTIVATION ALERTS
I04 CROSSING ACTIVE 20+ MINUTES
I05 AC POWER OFF 20+ MINUTES
I06 GATE NOT UP AFTER CROSSING CLEAR
I07 MTSS UNIT(S) FAILED
I08 GATE TIMING ERROR
I09 GATE POSITION FAIL
I10 SINGLE BULB OUT
I11 TWO OR MORE BULBS OUT
I12 IMPROPER FLASH RATE
I13 BELL MALFUNCTION
I14 GROUND FAULT
I15 LOW BATTERY
I16 PREEMPTION FAIL
T1 GROUND TEST (234.249)
T2 STANDBY POWER (234.251)
T3 FLASHING LIGHTS (234.253)
T4 GATE ARM AND GATE MECHANISMS (234.255)
T5 WARNING SYSTEM OPERATION (234.257)
T6 WARNING TIME (234.259)
T7 TRAFFIC PREEMPTION (234.261)
T8 MANUAL LAMP INSP. (234.253)
LCD DISPLAY
POWER
SAFETRAN systems
SEAR II EVENT RECORDER
A80273
XR1 XR2 ISLAND ISLAND 2 MAIN/STBY BELL OUT GATE "A" GATE "F" GATE "C" GATE "F" CONTROL GATE "A" CONTROL UAX ISLAND 3 *1 GROUND FAULT *2 GROUND FAULT PREEMPT 120 VAC TROUBLE LT B12 B16 B14 GROUND FAULT TEST AC POWER TEST
J5 DIGITAL INPUTS 01 02 03 04 05 06
J6 DIGITAL INPUTS 07 08 09 10 11 12
J7 DIGITAL INPUTS 13 14 15 16 17 18
J8 BATTERY INPUTS 1 2 3 RELAY OUTPUTS 1 2
(N1) N1AFXX (N2) NAMTSS (N3) NFMTSS
(1) XC1 (2) NXC1 (3) XC2 (4) NXC2 (5) ISL1 (6) NISL1 (7) ISL2 (8) NISL2 (9) M/S (10) NM/S (11) IAFXX (12) AMTSS (13) FMTSS
(14) CMTSS
(N4) NCMTSS (N5) DMTSS (N6) NDMTSS (16) GC OUT (N6) NGC OUT (17) UAX (18) NUAX
(19) AUX (20) NAUX (21) *1GFT DATA (22) *2GFT DATA
(23) PRE (24) NPRE (25) 2POKP (27) TLITE (28) NTLITE
(N7) *2NGFT DATA (26) N12 (N8) *1NGFT DATA
(29) B16 (30) N16 (31) B14 (32) N14
(BA15) B12 N12
(34) B12-ACRLY+
B16/B14-ACRLY+
(33) GFT TEST
TO PANEL "A1" SHT. 5
TO XCR SHEET 10
TO PANEL "A5" SH. 7
TO 2TR CONTACTS SH.9
TO PANEL "A5" SH. 7
TO SHEET 13
TO SHEET 13
TO EXT. RLY. CONTACTS SH.10
TO GFT 1 SHT.12
TO GFT 2 SHT.12
TO XCR SHT. 10
TO B14-POKR SHT. 6
TO SHEET 5
TO GFT*2 SHEET 12
TO PANEL "A3" SHT. 13
TO TLITE*2R SHT. 6
N12 (35) B12 (36) TO GFT*1 SHEET 12
ECH N B
ECH-B ECH-A TO PANEL "A4" ILOD*2 SHEET 13
ECH-B ECH-A TWIST
COMM J2
AUX J3
USER J4
ECHELON SERVICE
SAFETRAN systems A80276 VHF COMMUNICATOR
ECH USER B N
(BA40)
A80078 ☆
B12 N12 TO PANEL "A1" SHEET 5
NOTES:
44 CONDUCTOR/18 AWG CABLE PROVIDED WITH MONITOR
☆ = A80078 ECHELON TERMINATION UNIT TO TERMINATE ECHELON NETWORK.
* = ECHELON CONNECTIONS NOT TO EXCEED 53' IN LENGTH AND TOTAL LENGTH NOT TO EXCEED 430' WITH A MAXIMUM OF 8 NODES. RECOMMEND USE BELDEN WIRE CABLE #8461 OR EQUIVALENT.
* = ANY UNUSED CONNECTIONS ARE TO BE LEFT UNTERMINATED AND WIRE TIED TO THE ANGLE BAR AT THE TOP OF THE RACK.
B12-ACR PB (AB36) TO PANEL "A1" SHEET 5
B16-ACR PB (BC39B) TO PANEL "A1" SHEET 5
B14-ACR PB (BC44B) TO PANEL "A1" SHEET 5
B14-ACRLY+
TO GFT*1 SHEET 12
* I/O CONFIG NOT MARKED ON PANEL
SEAR II EVENT RECORDER & VHF RADIO
DESIGNED BY: BTH 01-04-07
DRAWN BY: IRE 01-04-07
CHECKED BY: RDO 01-05-07
IN SERVICE:
NORFOLK SOUTHERN
OFFICE OF ASS'T. VICE PRESIDENT COMM. & SIGNAL, ATLANTA, GA.
M.P.: CJ-181.8
SPRINGFIELD, OH CFLGS/FLS AT BURT ST.
DAYTON DISTRICT
FILE No. R-
CADD or DWG. No. B2111818.11
SHEET No. 11 of 28
REVISION INITIALS
PROPERTY PENNSYLVANIA R.R.

SITE SET UP PROCEDURE	
FUNCTION	LED DISPLAY
DATE	- -
TIME	:
DAYLIGHT SAVINGS TIME	YES
TIME ZONE	EST
SITE NAME	BURT ST.
DOT NUMBER	527 973K
MILEPOST	CJ-181.8
TESTER TYPE	CROSSING
DATE FORMAT	MM-DD-YYYY
TEMP FORMAT	FAHRENHEIT
SITE TYPE	NO COMMUNICATION
SITE ATCS	7.550.234.021.03.01
*** OFFICE ATCS ADDRESS	2.000.00.0000
*** POLL ID	1
*** OFFICE F8/F9	YES
*** OFFICE COMM DEVICE	SPREAD SPECTRUM RADIO
*** DIAL MODEM PORT	AUX/COMM
*** PHONE NUMBER	(OFFICE NUMBER)
*** INIT STRING	(LEAVE BLANK)
*** BACKUP SITE ADDRESS 1	
*** BACKUP SITE ADDRESS 2	
*** FIELD COMM	
**** USER PORT	BAUD 57600, N, 8, 1, NONE
**** AUX PORT	BAUD 9600, N, 8, 1, NONE
**** COMM PORT	BAUD 9600, N, 8, 1, NONE

CONTROL SYSTEM CONFIGURATION MENU QUESTIONS	
THE QUESTION	SELECT FROM MENU OPTION
RESET NAMES AND MODULES?	YES
NUMBER OF TRACKS?	3
NUMBER OF XR INPUTS?	1
CONSTANT WARNING DEVICE	CCP
CROSSING CONTROLLER?	SSCC III (A, PLUS)
MAIN / STANDBY	YES
AUXILIARY TRACKS?	YES
AUX TRACK	SET TO AUX
GATES?	2
EXIT GATES?	0
UAX?	NOT INSTALLED
BATTERY BANKS?	3
PREEMPTION?	NORMAL
ILOD MODULES?	2
LAMP TYPE?	NORMAL
AUTO INSPECTIONS?	YES
BELL SENSOR?	** 1
BELL SENSOR INPUT 7	** YES
BELL SENSOR INPUT 8	** NO
BELL SENSOR INPUT 9	** NO
BELL SENSOR INPUT 10	** NO
BELL ON?	GATES LOWERING
GATE TIP SENSORS?	YES
GROUND FAULT DETECTORS?	YES
CHANNEL 1	161.475 MHZ
CHANNEL 2	NONE
FULL APPROACH MOVE ALARMS	ACTIVATE
SSCC ATCS ADDRESS	7.550.234.021.07.01

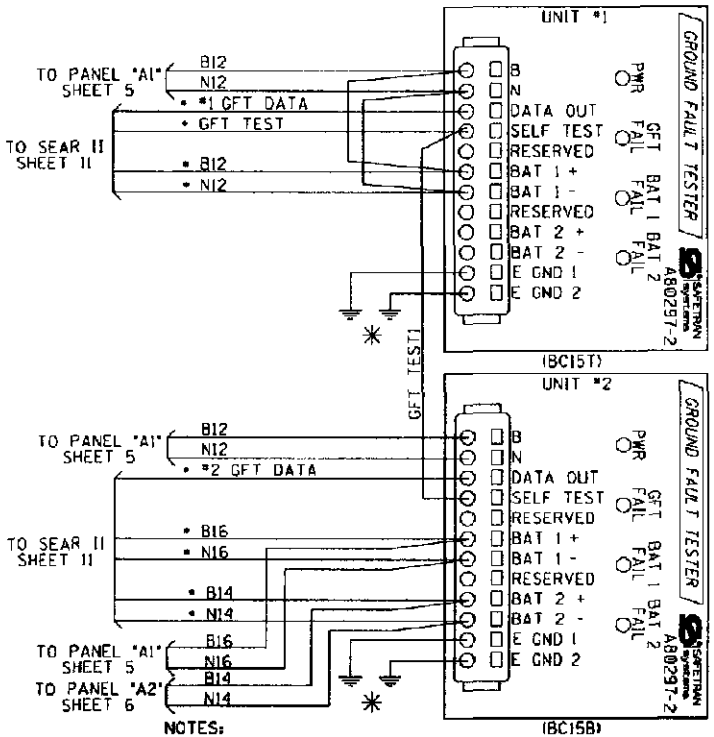

NOTES:

ALL WIRING TO BE #16AWG UNLESS NOTED OTHERWISE

• = CABLE PROVIDED WITH SEAR II

** = OPTIONS: IF BELL SENSOR = 0, THEN BELL FIELDS ARE NOT USED.

*** = IF SITE TYPE = NO COMMUNICATION, THEN THESE OPTIONS ARE NOT DISPLAYED

**** = THESE SETTINGS SHOULD BE LEFT AT THE DEFAULT SETTING.

VERIFY NUMBER OF BULBS: SENSOR #1	
CURR 1: LAMP SET UP	6 BULBS
CURR 2: LAMP SET UP	6 BULBS

VERIFY NUMBER OF BULBS: SENSOR #2	
CURR 1: LAMP SET UP	6 BULBS
CURR 2: LAMP SET UP	6 BULBS

VERIFY THE BATTERY SUPPLY VOLTAGES	
B12 BATTERY VOLTAGE AT INPUT DC1	VOLT 1: .
B16 BATTERY VOLTAGE AT INPUT DC2	VOLT 2: .
B14 BATTERY VOLTAGE AT INPUT DC3	VOLT 3: .

✳ = CONNECT "E GND 1" AND "E GND 2" TO INDEPENDENT GROUND POINTS ON SIDE A AND SIDE B.

SEAR II SET UP CHART & GROUND FAULT TESTER

DESIGNED BY: BTH 01-04-07	NORFOLK SOUTHERN		
DRAWN BY: IRE 01-04-07	OFFICE OF ASS'T. VICE PRESIDENT COMM. & SIGNAL, ATLANTA, GA.	M.P.: CJ-181.8	
CHECKED BY: RDO 01-05-07	SPRINGFIELD, OH CFLGS/FLS AT BURT ST.		
IN SERVICE: - -	DAYTON DISTRICT	FILE No. R-	
	CADD or DWG. No. 82111818.12	SHEET No. 12 of 28	

REVISION INITIALS

PROPERTY: PENNSYLVANIA R.R.

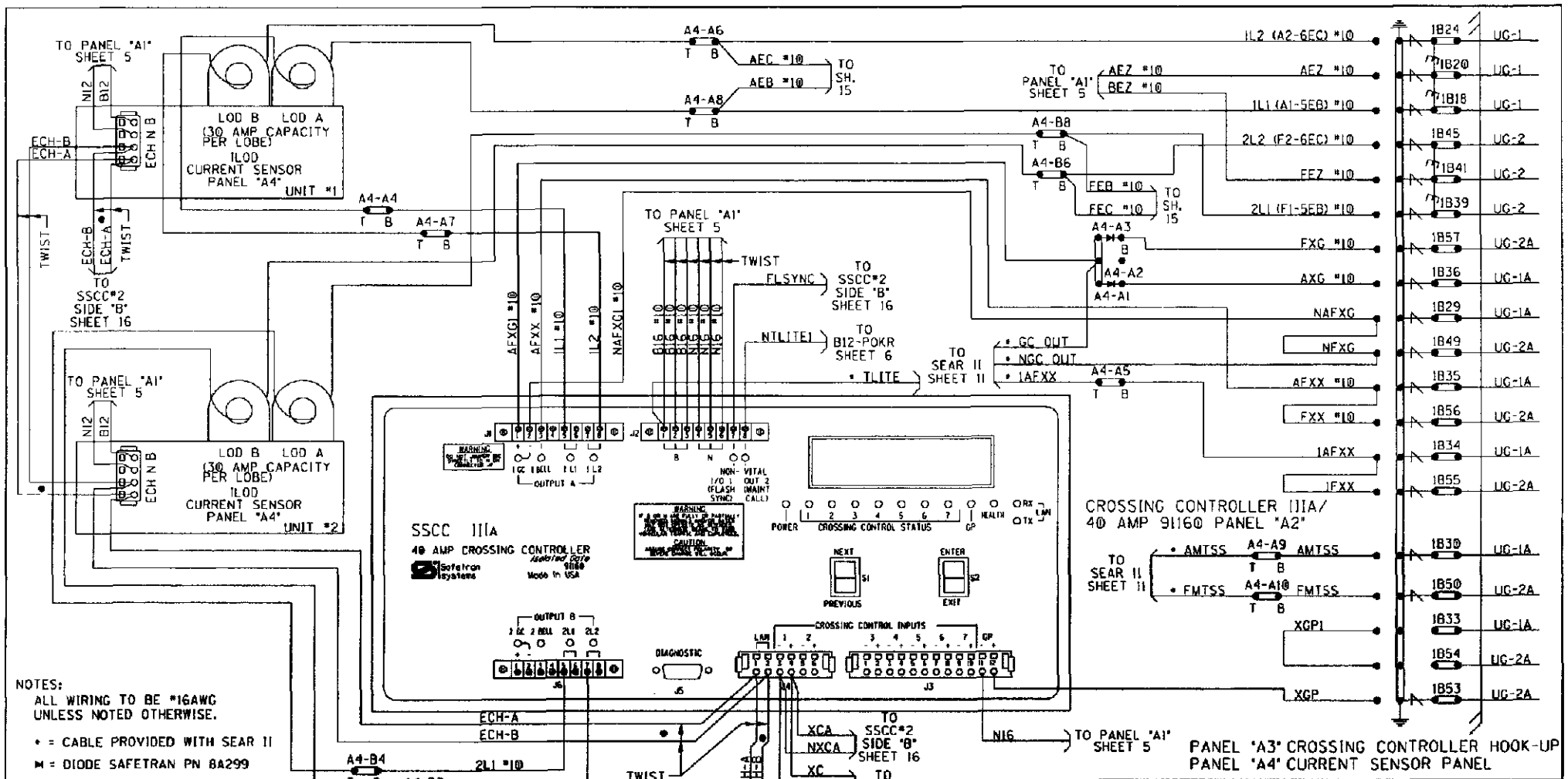

NOTES:
ALL WIRING TO BE #16AWG UNLESS NOTED OTHERWISE.

• = CABLE PROVIDED WITH SEAR II

⋈ = DIODE SAFETRAN PN 8A299

● = ECHELON CONNECTIONS NOT TO EXCEED 53' IN LENGTH AND TOTAL LENGTH NOT TO EXCEED 430' WITH A MAXIMUM OF 8 NODES, RECOMMEND USE BELDEN WIRE CABLE #8461 OR EQUIVALENT.

DESIGNED BY: BTH 01-04-07	NORFOLK SOUTHERN		
DRAWN BY: IRE 01-04-07	OFFICE OF ASS'T. VICE PRESIDENT COMM. & SIGNAL, ATLANTA, GA.	M.P.: CJ-181.8	
CHECKED BY: RDO 01-05-07	SPRINGFIELD, OH CFLGS/FLS AT BURT ST.		
IN SERVICE: - -	DAYTON DISTRICT	FILE No. R-	
	CADD or DWG. No. B2111818.13	SHEET No. 13 of 28	

REVISION INITIALS

PROPERTY PENNSYLVANIA R.R.

PROGRAM	
FLASHER RATE	40
1 GC DELAY	4 SEC.
2 GC DELAY	4 SEC.
BELL-ON GATE RISING	OFF
MIN ACTIVATION TIME	0 SEC.
ENABLE INPUTS	1 THRU 1
ENABLE OUTPUTS	A AND B
TIME	
DATE	
DAYLIGHT SAVINGS	ON
PASSWORD	DISABLED
SET TO DEFAULT	SKIP

SETUP LAMP VOLTAGE
SETUP OUTPUT 1L1 XX.X VOLTS
SETUP OUTPUT 1L2 XX.X VOLTS
SETUP OUTPUT 2L1 XX.X VOLTS
SETUP OUTPUT 2L2 XX.X VOLTS

CONFIGURE		
LOS TIMERS	1:	0 SEC.
	2:	0 SEC.
	3:	0 SEC.
	4:	0 SEC.
	5:	0 SEC.
	6:	0 SEC.
	7:	0 SEC.
ATCS ADDRESS	755023402107	
LOW BATTERY	DISABLED	
AUX I/O	NV OUTPUT	

TEST CONFIGURE	
LAMP TEST CANCEL TIMER	5 MIN.
LAMP TEST DELAY TIMER	30 SEC.
LAMP TEST ON TIMER	15 SEC.

PANEL 'A2' CROSSING CONTROLLER
SET-UP CHART

DESIGNED BY: BTH 01-04-07	NORFOLK SOUTHERN		
DRAWN BY: JRE 01-04-07	OFFICE OF ASS'T. VICE PRESIDENT COMM. & SIGNAL, ATLANTA, GA.	M.P.: CJ-181.8	
CHECKED BY: RDO 01-05-07	SPRINGFIELD, OH CFLGS/FLS AT BURT ST.		
IN SERVICE: - -	DAYTON DISTRICT	FILE No. R-	
	CADD or DWG. No. 82111818.14	SHEET No. 14 of 28	

REVISION INITIALS											

PROPERTY
PENNSYLVANIA R.R.

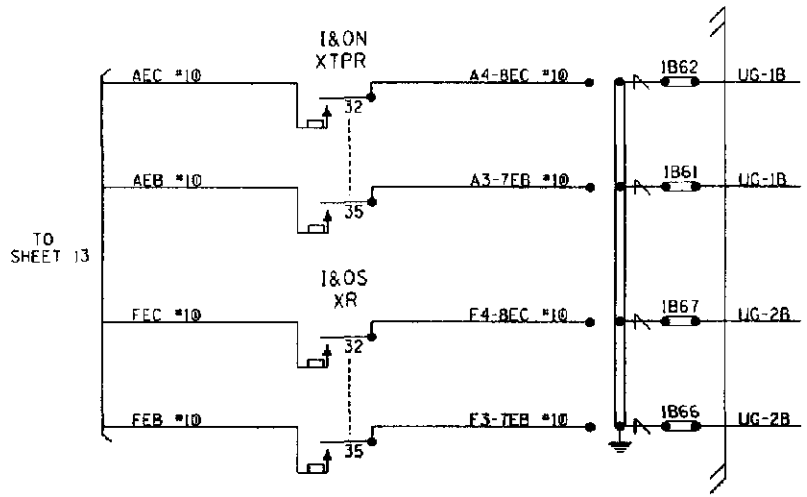

CROSSING CONTROLLER #1 HOOK-UP

DESIGNED BY: BTH 01-04-07	NORFOLK SOUTHERN	
DRAWN BY: IRE 01-04-07	OFFICE OF ASS'T. VICE PRESIDENT COMM. & SIGNAL, ATLANTA, GA.	M.P.: CJ-181.8
CHECKED BY: RDO 01-05-07	SPRINGFIELD, OH CFLGS/FLS AT BURT ST.	
IN SERVICE: - -	DAYTON DISTRICT	FILE No. R-
	CADD or DWG. No. 82111818.15	SHEET No. 15 of 28

REVISION INITIALS

PROPERTY
PENNSYLVANIA R.R.

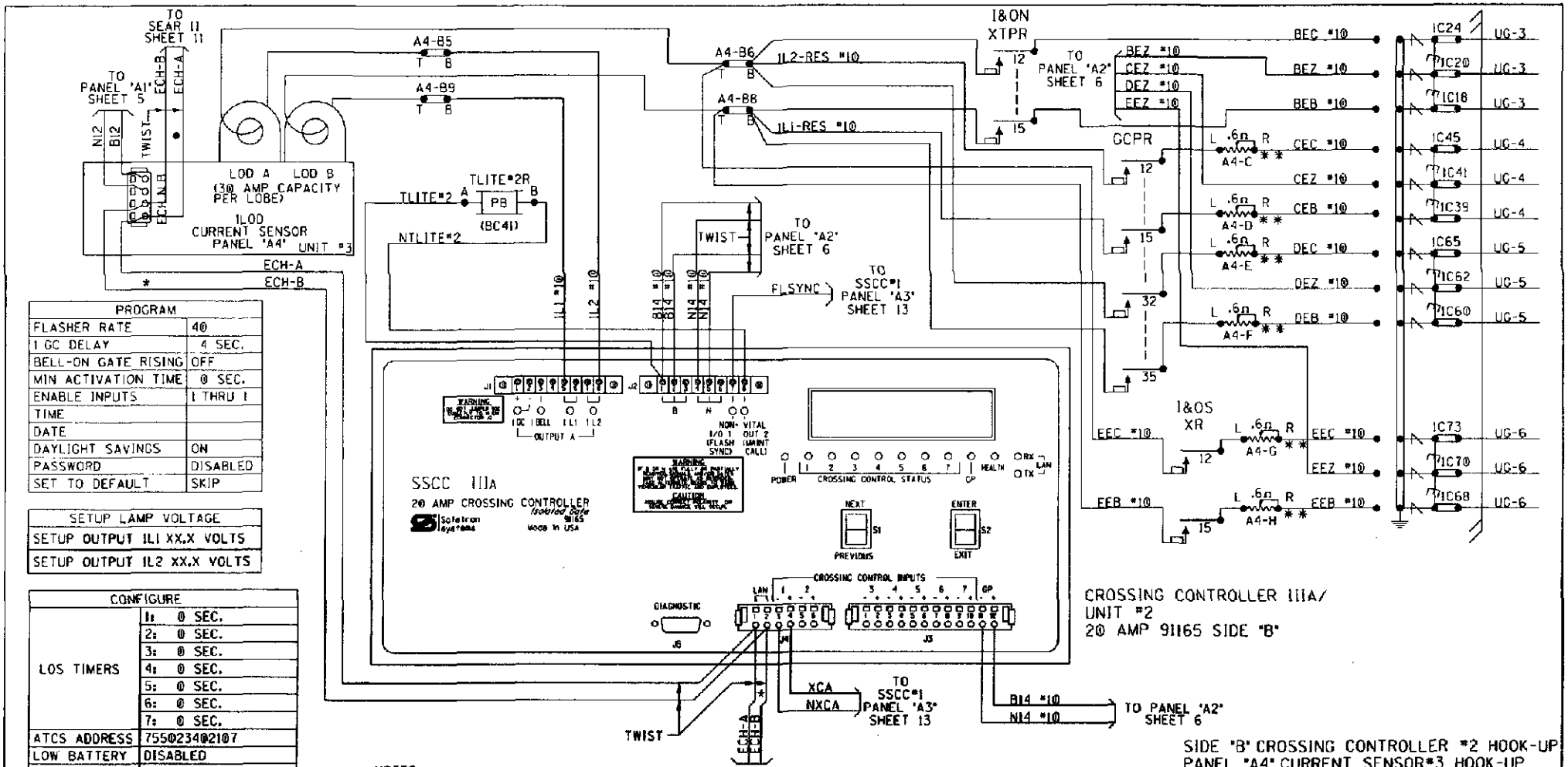

PROGRAM	
FLASHER RATE	40
1 GC DELAY	4 SEC.
BELL-ON GATE RISING	OFF
MIN ACTIVATION TIME	0 SEC.
ENABLE INPUTS	1 THRU 1
TIME	
DATE	
DAYLIGHT SAVINGS	ON
PASSWORD	DISABLED
SET TO DEFAULT	SKIP

SETUP LAMP VOLTAGE
SETUP OUTPUT 1L1 XX.X VOLTS
SETUP OUTPUT 1L2 XX.X VOLTS

CONFIGURE		
LOS TIMERS	1:	0 SEC.
	2:	0 SEC.
	3:	0 SEC.
	4:	0 SEC.
	5:	0 SEC.
	6:	0 SEC.
	7:	0 SEC.
ATCS ADDRESS	7550234 02107	
LOW BATTERY	DISABLED	
AUX I/O	NV OUTPUT	

TEST CONFIGURE	
LAMP TEST CANCEL TIMER	5 MIN.
LAMP TEST DELAY TIMER	30 SEC.
LAMP TEST ON TIMER	15 SEC.

NOTES:
ALL WIRING TO BE #16AWG UNLESS NOTED OTHERWISE.

• = CABLE PROVIDED WITH SEAR II

** = RESISTORS TO BE INSTALLED TO LAMPS WITH SHORTEST CABLE RUN

* = ECHELON CONNECTIONS NOT TO EXCEED 53' IN LENGTH AND TOTAL LENGTH NOT TO EXCEED 430' WITH A MAXIMUM OF 8 NODES. RECOMMEND USE BELDEN WIRE CABLE #8461 OR EQUIVALENT.

SIDE "B" CROSSING CONTROLLER #2 HOOK-UP
PANEL "A4" CURRENT SENSOR#3 HOOK-UP

DESIGNED BY: BTH 01-04-07	NORFOLK SOUTHERN		
DRAWN BY: IRE 01-04-07	OFFICE OF ASS'T. VICE PRESIDENT COMM. & SIGNAL, ATLANTA, GA.	M.P.: CJ-181.8	
CHECKED BY: RDO 01-05-07	SPRINGFIELD, OH CFLGS/FLS AT BURT ST.		
IN SERVICE: - -	DAYTON DISTRICT	FILE No. R-	
	CADD or DWG. No. 82111818.16	SHEET No. 16 of 28	

REVISION INITIALS

PROPERTY
PENNSYLVANIA R.R.

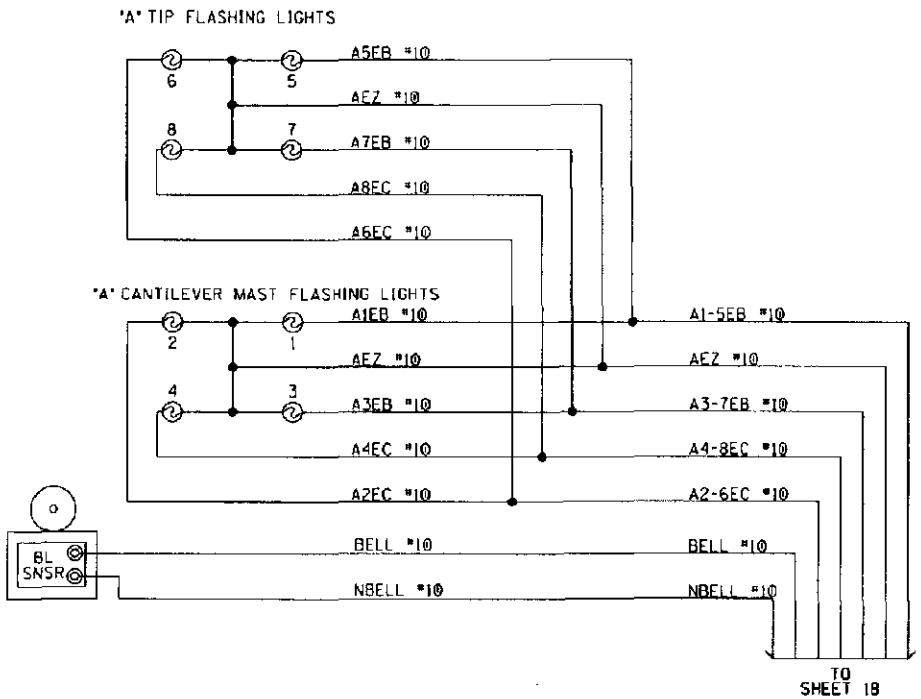

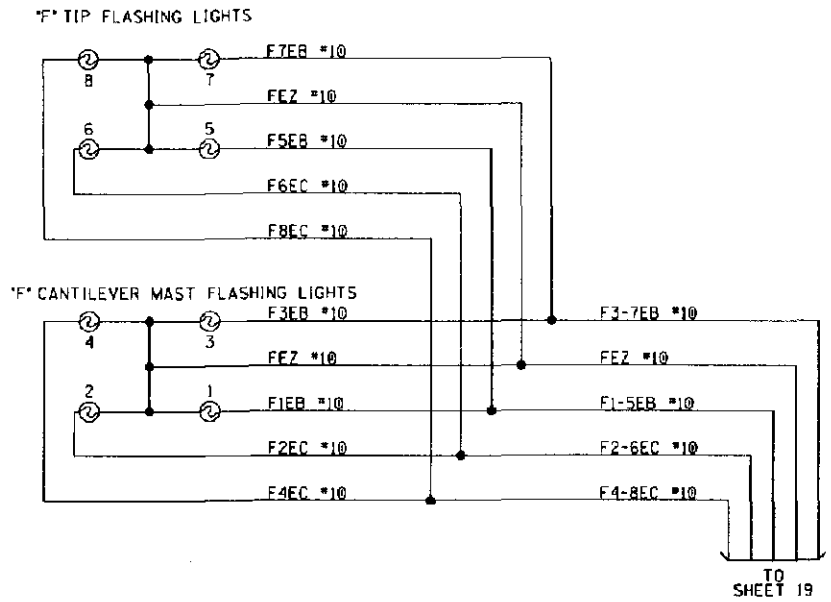

CANTILEVER FLASHER LIGHTS

DESIGNED BY: BTH 01-04-07	NORFOLK SOUTHERN	
DRAWN BY: IRE 01-04-07	OFFICE OF ASS'T. VICE PRESIDENT COMM. & SIGNAL, ATLANTA, GA.	M.P.: CJ-181.8
CHECKED BY: RDO 01-05-07	SPRINGFIELD, OH CFLGS/FLS AT BURT ST.	
IN SERVICE: - -	DAYTON DISTRICT	FILE No. R-
	CADD or DWG. No. 82111818.17	SHEET No. 17 of 28

REVISION INITIALS

PROPERTY PENNSYLVANIA R.R.

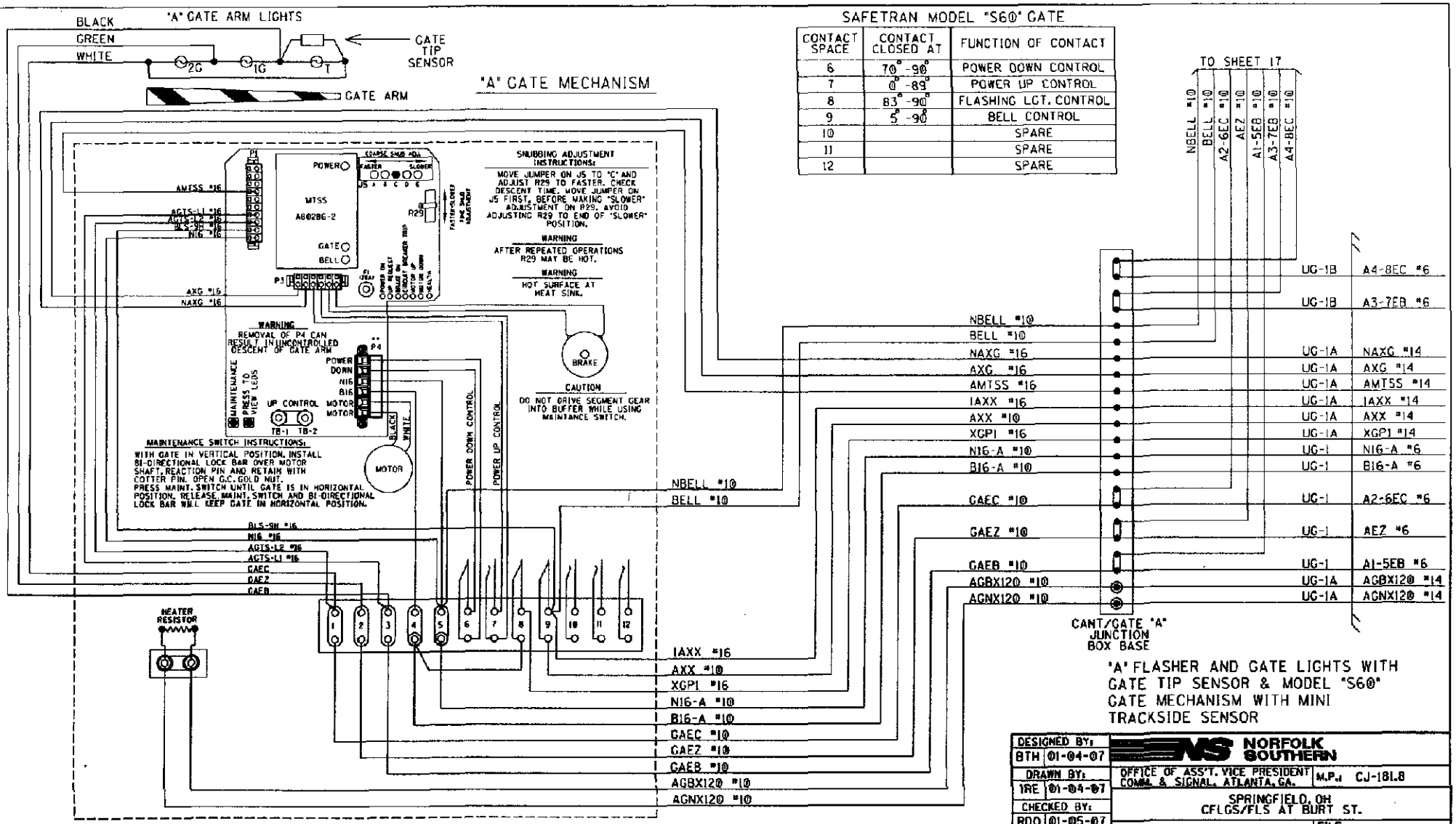

CONTACT SPACE	CONTACT CLOSED AT	FUNCTION OF CONTACT
6	70° -90°	POWER DOWN CONTROL
7	0° -89°	POWER UP CONTROL
8	83° -90°	FLASHING LGT. CONTROL
9	5° -90°	BELL CONTROL
10		SPARE
11		SPARE
12		SPARE

"A" FLASHER AND GATE LIGHTS WITH GATE TIP SENSOR & MODEL "S60" GATE MECHANISM WITH MINI TRACKSIDE SENSOR

DESIGNED BY: BTH 01-04-07	NORFOLK SOUTHERN	
DRAWN BY: TRE 01-04-07	OFFICE OF ASS'T. VICE PRESIDENT COMM. & SIGNAL, ATLANTA, GA.	M.P.: CJ-181.8
CHECKED BY: RDO 01-05-07	SPRINGFIELD, OH CFLGS/FLS AT BURT ST.	
IN SERVICE: - -	DAYTON DISTRICT	FILE No. R-
	CADD or DWG. No. 82111818.18	SHEET No. 18 of 28

REVISION INITIALS

PROPERTY PENNSYLVANIA R.R.

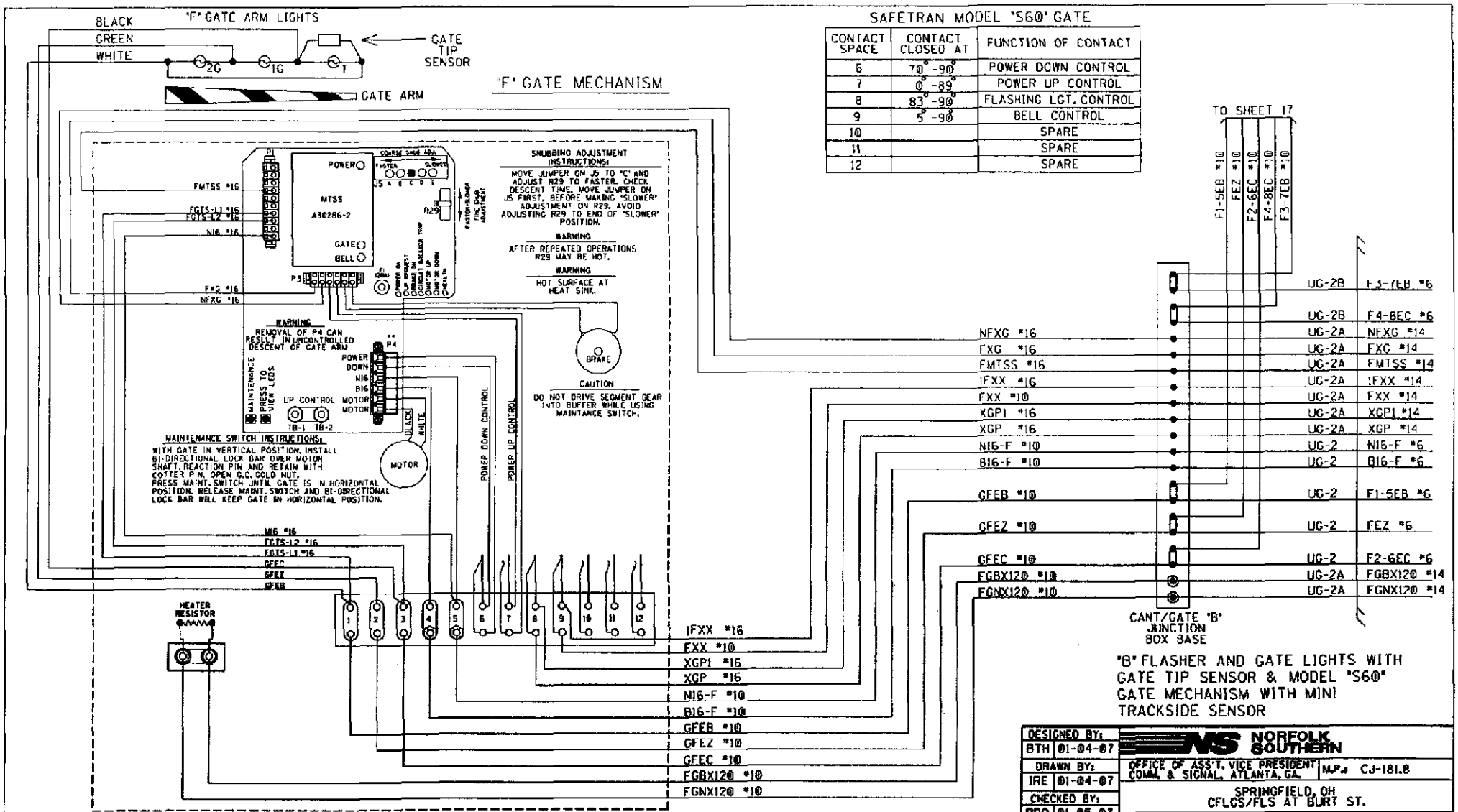

CONTACT SPACE	CONTACT CLOSED AT	FUNCTION OF CONTACT
6	70° -90°	POWER DOWN CONTROL
7	0° -89°	POWER UP CONTROL
8	83° -90°	FLASHING LGT. CONTROL
9	5° -90°	BELL CONTROL
10		SPARE
11		SPARE
12		SPARE

DESIGNED BY: BTH 01-04-07	NORFOLK SOUTHERN	
DRAWN BY: IRE 01-04-07	OFFICE OF ASS'T. VICE PRESIDENT COMM. & SIGNAL, ATLANTA, GA.	M.P.: CJ-181.8
CHECKED BY: RDO 01-05-07	SPRINGFIELD, OH CFLCS/FLS AT BURT ST.	
IN SERVICE: - -	DAYTON DISTRICT	FILE No. R-
	CADD or DWG. No. 82111818.19	SHEET No. 19 of 28

REVISION INITIALS

PROPERTY PENNSYLVANIA R.R.

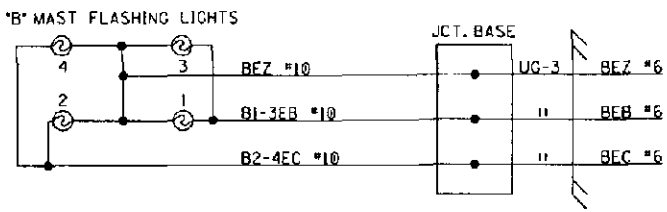

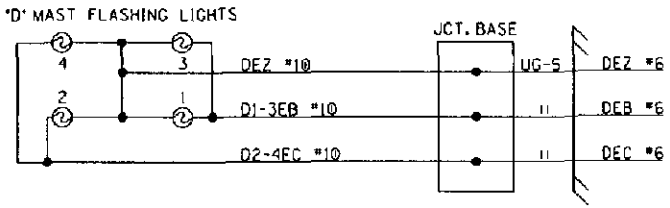

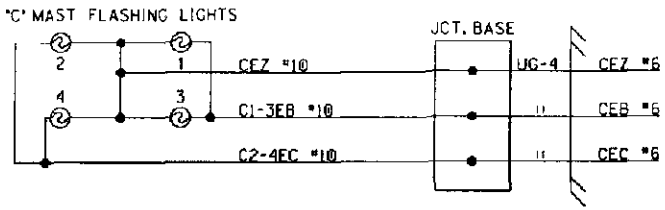

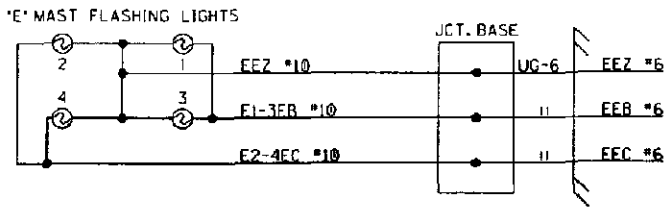

FLASHER LIGHTS

DESIGNED BY: BTH 01-04-07	NORFOLK SOUTHERN	
DRAWN BY: IRE 01-04-07	OFFICE OF ASS'T. VICE PRESIDENT COMM. & SIGNAL, ATLANTA, GA.	M.P.: CJ-181.8
CHECKED BY: RDO 01-05-07	SPRINGFIELD, OH CFLGS/FLS AT BURT ST.	
IN SERVICE: - -	DAYTON DISTRICT	FILE No. R-
	CADD or DWG. No. 82111818.20	SHEET No. 20 of 28

REVISION INITIALS										

PROPERTY
PENNSYLVANIA R.R.

LEFT TWO ROWS TERMINAL BOARD 1

"1A" "1B"

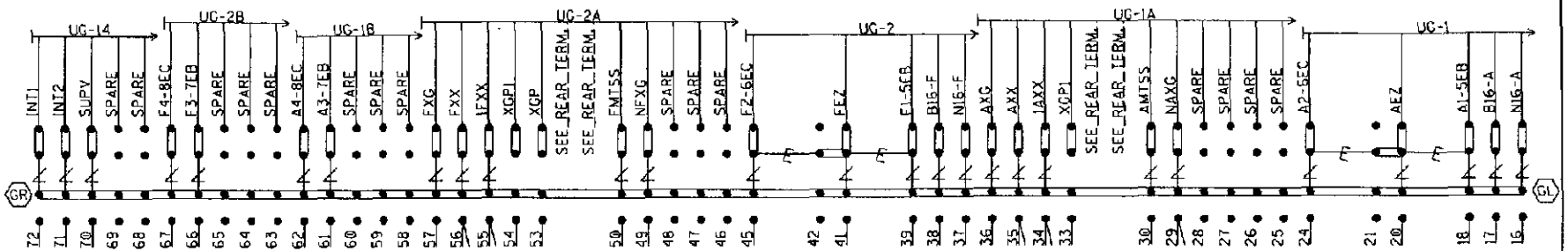

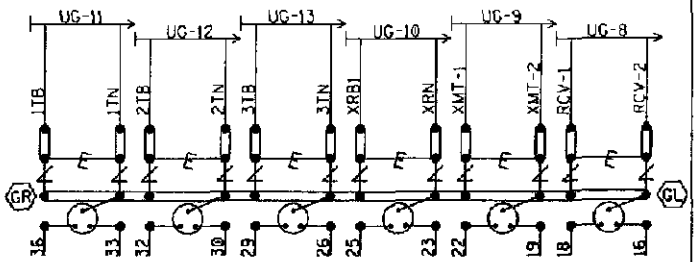

NOTE: INSTALL TEST LINKS ON ALL TRACK WIRES AND ON ALL LOW VOLTAGE UNDERGROUND CABLE TERMINATIONS.

SEE FARADAY SHIELD DETAILS - 1A & 1B FOR HOW THIS PORTION OF THE FARADAY SHIELD IS PREDRILLED. ONLY INSTALL AND USE THE TERMINALS NEEDED.

= Heavy Duty Equalizer (022700-1X)

Clearview = Lightning Arrester (022585-1X)

= LPC-10560-51

GR / GL = TERMINALS GROUNDED TO SHIELD. 4 POST BLOCKS USE EITHER - GR - SERMMI PART NO. 61278 GL - SERMMI PART NO. 61278-1.

BACKBOARD DETAIL - 1A & 1B

DESIGNED BY: BTH 01-04-07	NORFOLK SOUTHERN	
DRAWN BY: IRE 01-04-07	OFFICE OF ASS'T. VICE PRESIDENT COMM. & SIGNAL, ATLANTA, GA.	M.P.: CJ-181.8
CHECKED BY: RDO 01-05-07	SPRINGFIELD, OH CFLGS/FLS AT BURT ST.	
IN SERVICE: - -	DAYTON DISTRICT	FILE No. R-
	CADD or DWG. No. 82111818.21	SHEET No. 21 of 28

REVISION INITIALS

PROPERTY PENNSYLVANIA R.R.

REAR VIEW OF LEFT TWO ROWS TERMINAL BOARD I
"1A"
"1B"

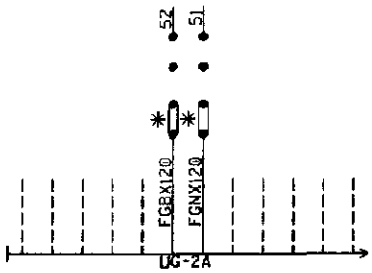

(SEE PREVIOUS SHEET FOR OTHER WIRES IN CABLE)

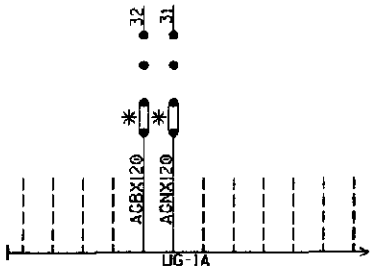

(SEE PREVIOUS SHEET FOR OTHER WIRES IN CABLE)

NOTE: ALL 120VAC AND ABOVE WILL BE WIRED TO THE REAR OF FARADAY BACKBOARD. INSULATED NUTS MUST BE USED ON ALL TERMINALS.

* = CLOSED DURING WINTER MONTHS

REAR OF FARADAY BACKBOARD
REAR BACKBOARD DETAIL - 1A & 1B

DESIGNED BY: BTH 01-04-07	NORFOLK SOUTHERN		
DRAWN BY: JRE 01-04-07	OFFICE OF ASS'T. VICE PRESIDENT COMM. & SIGNAL, ATLANTA, GA.	M.P.: CJ-181.8	
CHECKED BY: RDO 01-05-07	SPRINGFIELD, OH CFLGS/FLS AT BURT ST.		
IN SERVICE: - -	DAYTON DISTRICT	FILE No. R-	
	CADD or DWG. No. 82111818.22	SHEET No. 22 of 28	

REVISION INITIALS

PROPERTY
PENNSYLVANIA R.R.

RIGHT ROW TERMINAL BOARD 1

"1C"

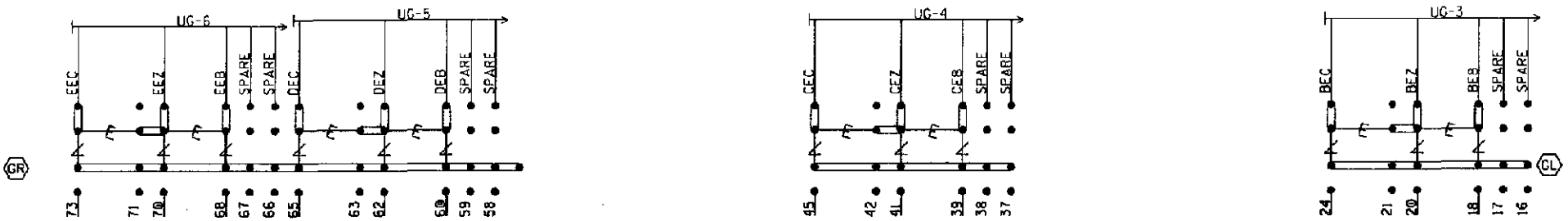

NOTE: INSTALL TEST LINKS ON ALL TRACK WIRES AND ON ALL LOW VOLTAGE UNDERGROUND CABLE TERMINATIONS.

SEE FARADAY SHIELD DETAILS - 1A & 1B FOR HOW THIS PORTION OF THE FARADAY SHIELD IS PREDRILLED. ONLY INSTALL AND USE THE TERMINALS NEEDED.

= Heavy Duty Equalizer (022700-1X)

= Clearview Lightning Arrester (022585-1X)

= LPC-10560-51

GR / GL = TERMINALS GROUNDED TO SHIELD. 4 POST BLOCKS USE EITHER - GR - SERMMI PART NO. 61278 GL - SERMMI PART NO. 61278-1.

BACKBOARD DETAIL - 1C

DESIGNED BY: BTH 01-04-07	NORFOLK SOUTHERN		
DRAWN BY: IRE 01-04-07	OFFICE OF ASS'T. VICE PRESIDENT COMM. & SIGNAL, ATLANTA, GA.	M.P.: CJ-181.8	
CHECKED BY: RDO 01-05-07	SPRINGFIELD, OH CFLGS/FLS AT BURT ST.		
IN SERVICE: - -	DAYTON DISTRICT	FILE No. R-	
	CADD or DWG. No. 82111818.23	SHEET No. 23 of 28	

REVISION INITIALS

PROPERTY PENNSYLVANIA R.R.

NOTE: IF THE FARADAY SHIELD WOULD EVER NEED TO BE DRILLED IN THE FIELD, PROPER PRECAUTIONS MUST BE TAKEN TO INSURE METAL SHAVINGS DO NOT GET INTO EXISTING TERMINALS/WIRES.

AREA BELOW IS SCALED WITH AS=.75

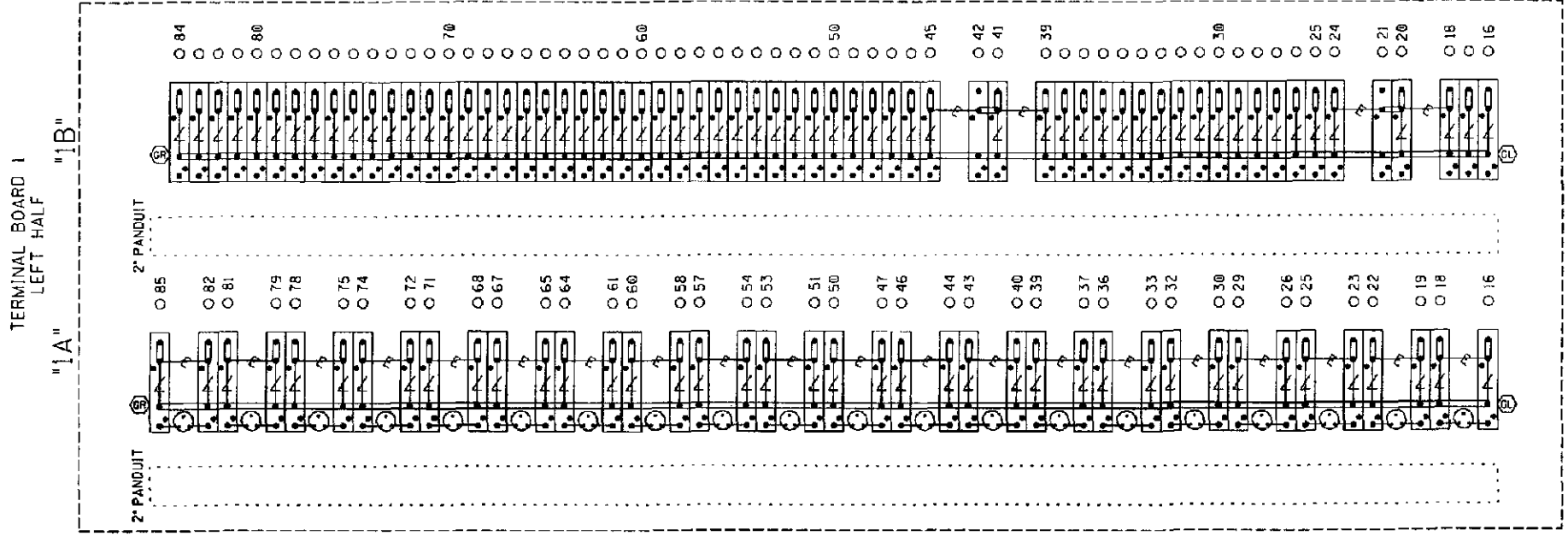

= Heavy Duty Equalizer (022700-1X)

Clearview = Lightning Arrester (022585-1X)

= LPC-10560-51

TERMINAL BOARD 1
LEFT TWO ROWS
FARADAY SHIELD DETAIL - 1A & 1B

= INDICATES PLACEMENT OF PANDUIT

THIS SHEET IS FOR REFERENCE ONLY. TO REFLECT HOW THE FARADAY SHIELD IS PREDRILLED. ONLY INSTALL AND USE THE TERMINALS NEEDED.

GR / GL = TERMINALS GROUNDED TO SHIELD. 4 POST BLOCKS USE EITHER - GR - SERMMI PART NO. 61278 GL - SERMMI PART NO. 61278-1.

DESIGNED BY: BTH 01-04-07	NORFOLK SOUTHERN		
DRAWN BY: IRE 01-04-07	OFFICE OF ASS'T. VICE PRESIDENT COMM. & SIGNAL, ATLANTA, GA.	M.P.: CJ-181.8	
CHECKED BY: RDO 01-05-07	SPRINGFIELD, OH CFLGS/FLS AT BURT ST.		
IN SERVICE: - -	DAYTON DISTRICT	FILE No. R-	
	CADD or DWG. NO. B2111818.24	SHEET No. 24 of 28	

REVISION INITIALS

PROPERTY PENNSYLVANIA R.R.

NOTE: IF THE FARADAY SHIELD WOULD EVER NEED TO BE DRILLED IN THE FIELD, PROPER PRECAUTIONS MUST BE TAKEN TO INSURE METAL SHAVINGS DO NOT GET INTO EXISTING TERMINALS/WIRES.

AREA BELOW IS SCALED WITH AS=.75

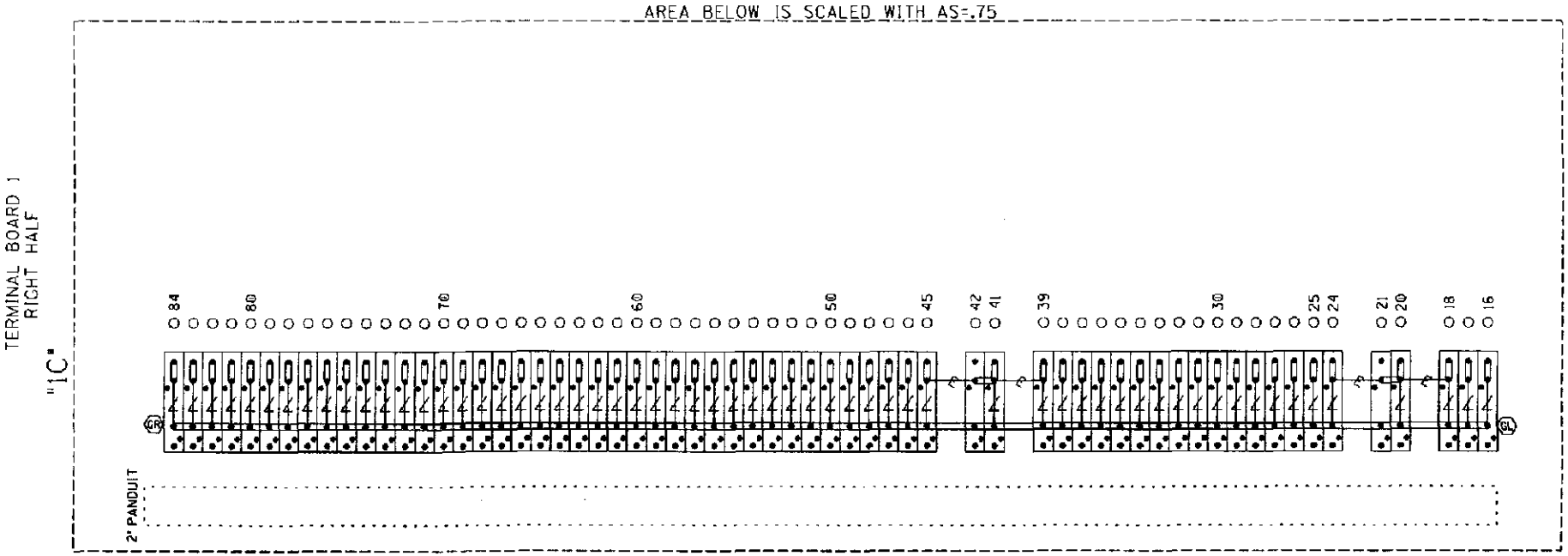

= Heavy Duty Equalizer (02270Ø-1X)

Clearview = Lightning Arrester (02285-1X)

= LPC-1056Ø-51

= INDICATES PLACEMENT OF PANDUIT

THIS SHEET IS FOR REFERENCE ONLY, TO REFLECT HOW THE FARADAY SHIELD IS PREDRILLED. ONLY INSTALL AND USE THE TERMINALS NEEDED.

GR / GL = TERMINALS GROUNDED TO SHIELD. 4 POST BLOCKS USE EITHER - GR - SERMMI PART NO. 61278 GL - SERMMI PART NO. 61278-1.

TERMINAL BOARD 1
RIGHT ROW
FARADAY SHIELD DETAIL - 1C

DESIGNED BY: BTH 01-04-07	NORFOLK SOUTHERN
DRAWN BY: IRE 01-04-07	OFFICE OF ASS'T. VICE PRESIDENT COMM. & SIGNAL, ATLANTA, GA. — M.P.: CJ-181.8
CHECKED BY: RDO 01-05-07	SPRINGFIELD, OH CFLGS/FLS AT BURT ST.
IN SERVICE: - -	DAYTON DISTRICT — FILE NO. R-
	CADD or DWG. No. 82111818.25 — SHEET No. 25 of 28

REVISION INITIALS

PROPERTY: PENNSYLVANIA R.R.

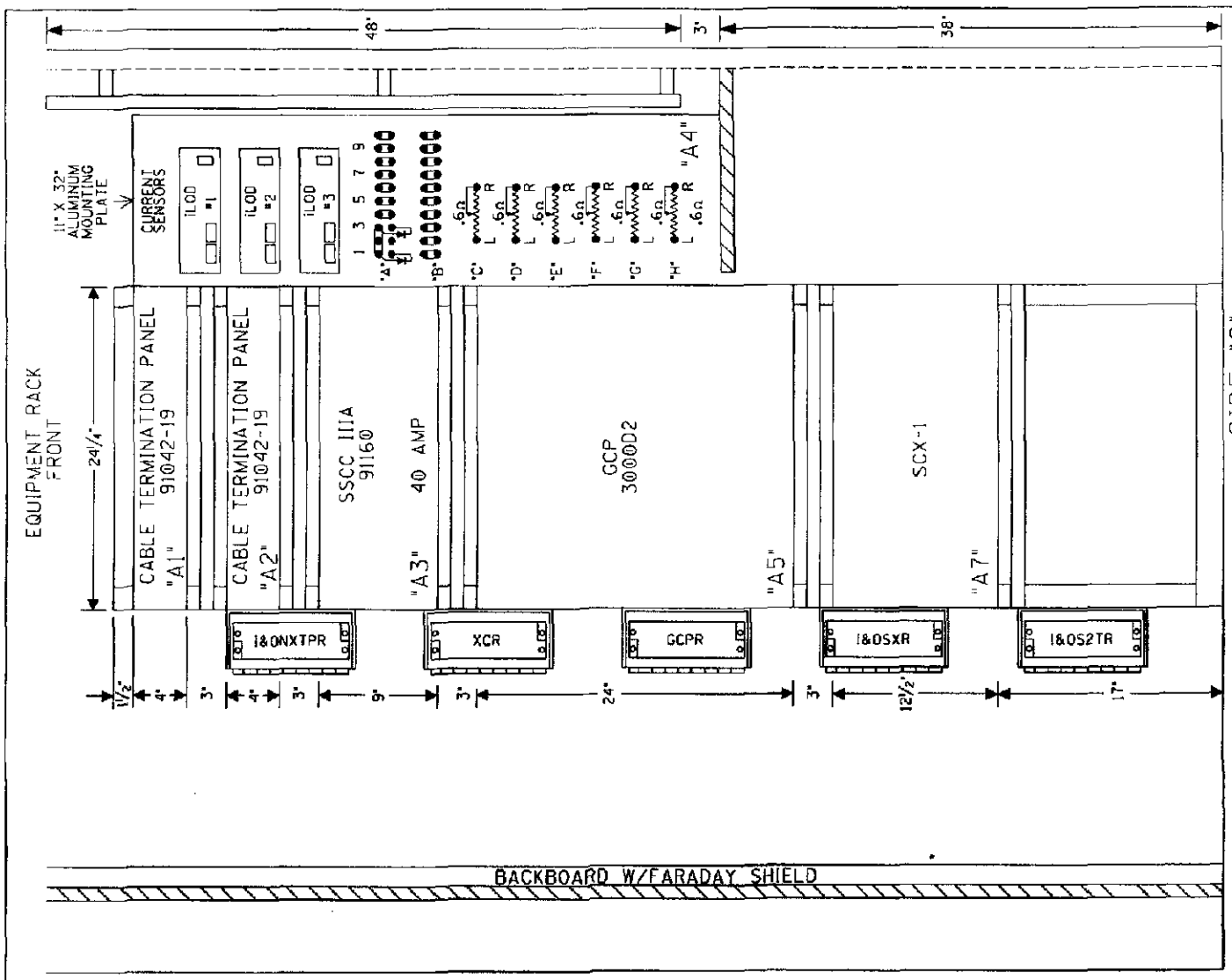

SIDE "C"

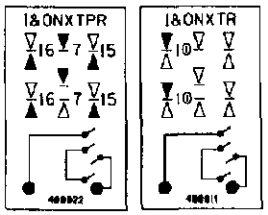

SAFETRAN, ALSTOM(GRS) RELAY CROSS REFERENCE LIST

SAFETRAN	ALSTOM(GRS)
400011	A62-276

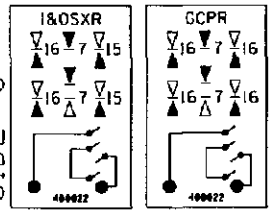

SAFETRAN, ALSTOM(GRS) RELAY CROSS REFERENCE LIST

SAFETRAN	ALSTOM(GRS)
400022	A62-311

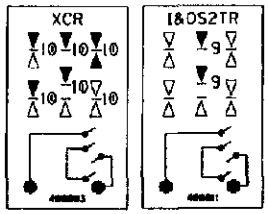

SAFETRAN, ALSTOM(GRS) RELAY CROSS REFERENCE LIST

SAFETRAN	ALSTOM(GRS)
400003	A62-308

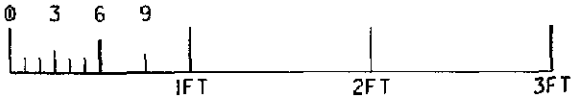

RACK PLACEMENT
6' X 6' HOUSE - SIDE "C"

DESIGNED BY: BTH 01-04-07	NORFOLK SOUTHERN		
DRAWN BY: IRE 01-04-07	OFFICE OF ASS'T. VICE PRESIDENT COMM. & SIGNAL, ATLANTA, GA.	M.P.: CJ-181.8	
CHECKED BY: RDO 01-05-07	SPRINGFIELD, OH CFLGS/FLS AT BURT ST.		
IN SERVICE: - -	DAYTON DISTRICT	FILE No. R-	
	CADD or DWG. No. 82111818.26	SHEET No. 26 of 28	

REVISION INITIALS

PROPERTY
PENNSYLVANIA R.R.

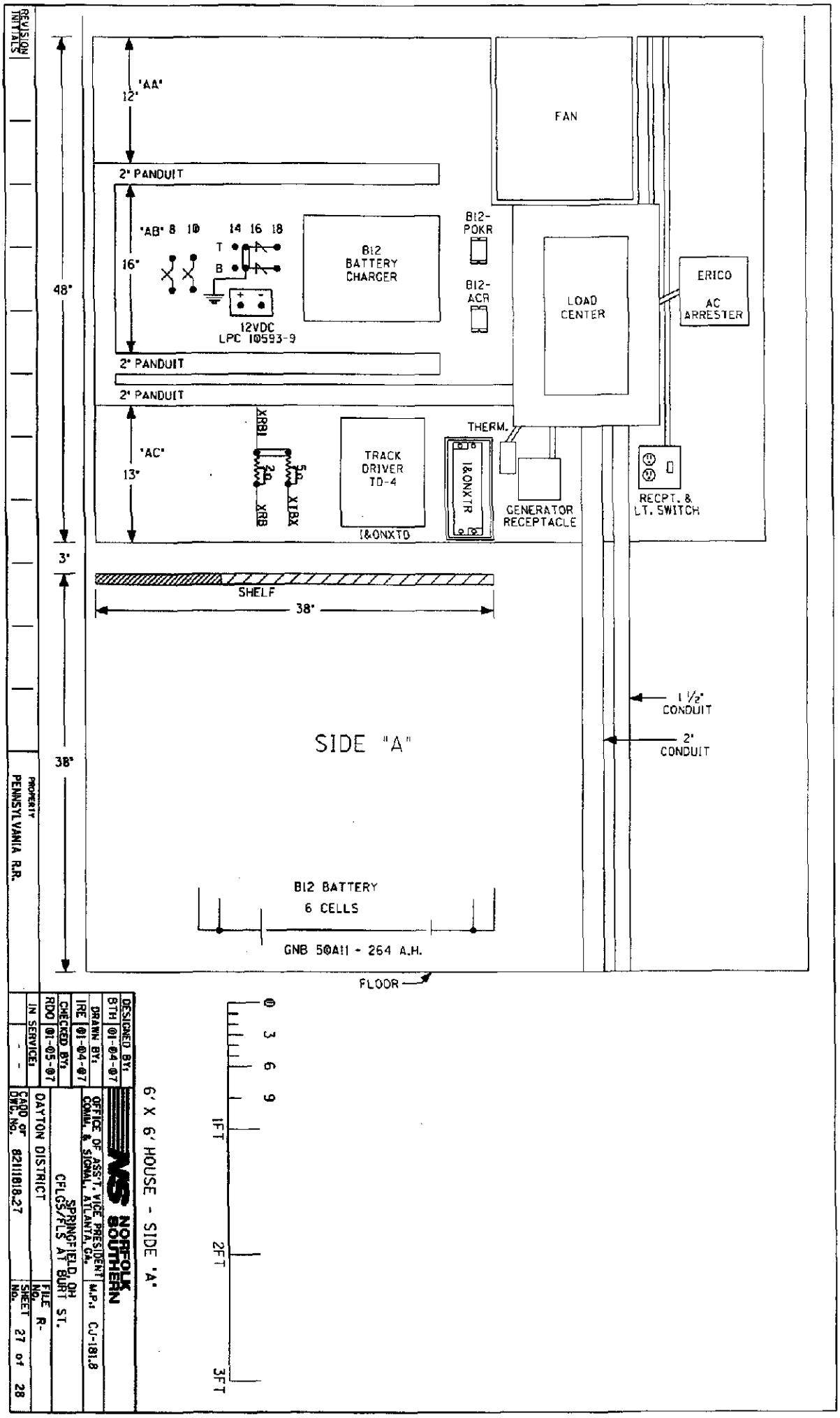
REVISION INITIALS
PROPERTY PENNSYLVANIA R.R.
48"
12"
'AA'
2" PANDUIT
'AB' 8 10
14 16 18
T
B
16"
12VDC
LPC 10593-9
B12 BATTERY CHARGER
B12-POKR
B12-ACR
FAN
LOAD CENTER
ERICO
AC ARRESTER
2" PANDUIT
2" PANDUIT
'AC'
13"
XRBB
XRB
XTBX
TRACK DRIVER TD-4
I&ONXTD
THERM.
I&ONXTR
GENERATOR RECEPTACLE
RECPT. & LT. SWITCH
3"
SHELF
38"
1 1/2" CONDUIT
2" CONDUIT
SIDE "A"
38"
B12 BATTERY
6 CELLS
GNB 50A11 - 264 A.H.
FLOOR
0 3 6 9
1FT
2FT
3FT
6' X 6' HOUSE - SIDE 'A'
DESIGNED BY: BTH 01-04-07
DRAWN BY: IRE 01-04-07
CHECKED BY: RDO 01-05-07
IN SERVICE: - -
NORFOLK SOUTHERN
OFFICE OF ASS'T. VICE PRESIDENT COMM. & SIGNAL, ATLANTA, GA.
M.P.: CJ-181.8
SPRINGFIELD, OH
CFLCS/FLS AT BURT ST.
DAYTON DISTRICT
CADD OF DWG. No. 82111818-27
FILE No. R-
SHEET No. 27 of 28

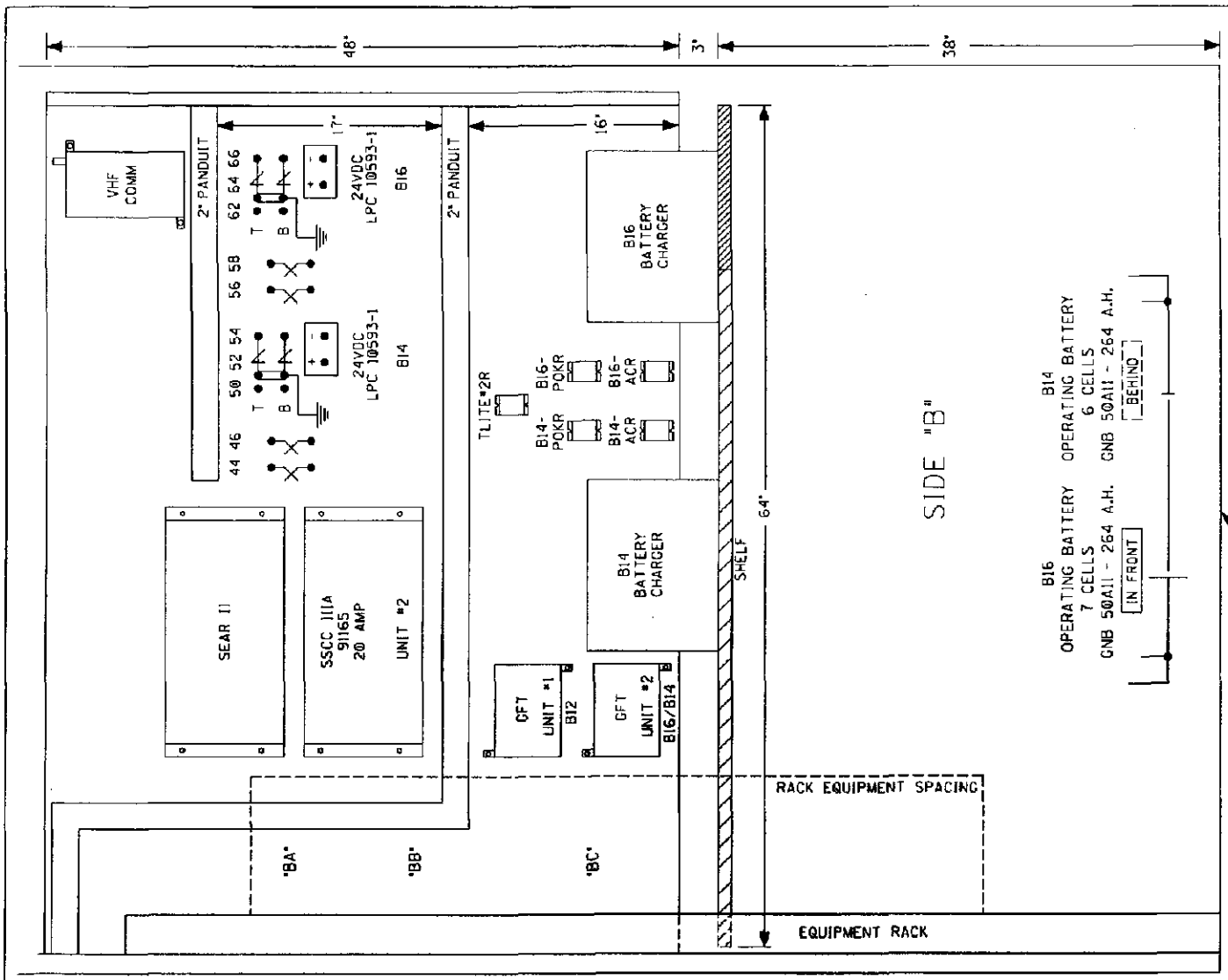

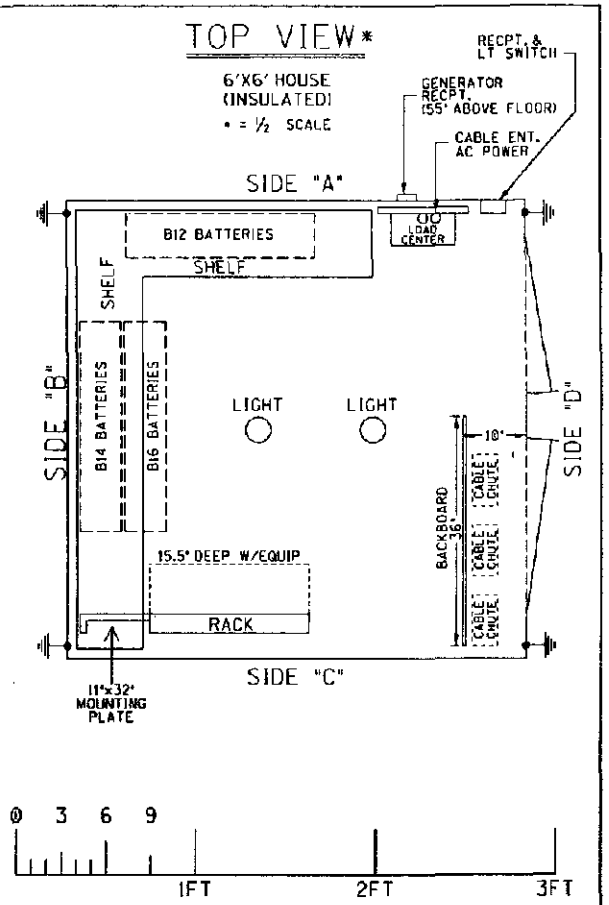

6' X 6' HOUSE (SIDE 'B' & TOP VIEW)

DESIGNED BY: BTH 01-04-07	NORFOLK SOUTHERN	
DRAWN BY: JRE 01-04-07	OFFICE OF ASS'T. VICE PRESIDENT COMM. & SIGNAL, ATLANTA, GA.	M.P.: CJ-181.8
CHECKED BY: RDO 01-05-07	SPRINGFIELD, OH CFLCS/FLS AT BURT ST.	
IN SERVICE: - -	DAYTON DISTRICT	FILE No. R-
	CADD or DWG. No. 82111818.28	SHEET No. 28 of 28

REVISION INITIALS

PROPERTY PENNSYLVANIA R.R.