FILE

26

Norfolk Southern Corporation
Communications and Signal Department
1200 Peachtree Street, N.E.
Atlanta, Georgia 30309-3579
404/529-1216

RECEIVED-DOCKETING DIV
2007 FEB 12 AM 9:44
PUCO

February 6, 2007
061-10.0492

06-1326-RR-FED

Ms. Susan Kirkland
Ohio DOT
1980 W. Broad St.
Columbus, OH 43223

RE: In the Matter of the Implementation of the Norfolk Southern Corridor Safety Project "CJ" Line from Columbus, OH to Cincinnati, OH

Dear Ms. Kirkland:

Per the ORDC letter dated November 1, 2007, regarding the above case for the upgrade of automatic grade crossing warning devices at Snyder Street in Springfield, Clark County, Ohio, DOT: 523 506J, Milepost CJ-184.93.

Although we cannot give you an exact date of installation at this time we can provide our average installation time, which is 9.1 months after authorization from the state. After this project is authorized, we will order material and schedule for installation once we have received approvals from ODOT's district office.

An extra copy of this letter is included with the enclosures. Please date stamp this extra copy and forward to Mr. R. S. Noe, Assistant General Attorney, Norfolk Southern Corporation, Three Commercial Place, Norfolk, Virginia, 23510.

Upon receipt of this revised material, please initial, date and confirm via fax to 404-527-2901.

Sincerely,

B L Sykes

B. L. Sykes

Enclosure(s)

BLS/rhr/cp/rjs

Cc: Mr. R. S. Noe, NS Corporation, Norfolk, VA
✓Ms. Bonnie Johrendt, PUCO (w/plans, estimate and material list)
Mr. Tim Perkins (w/plans, estimate and material list)
Docketing Division (w/plans, estimate and material list)
Ms. P. A. Gray, NS Corporation, Roanoke, VA (w/estimate)

This is to certify that the images appearing are an accurate and complete reproduction of a case file document delivered in the regular course of business.
Technician RRW Date Processed 2/12/07

RECEIVED
PUBLIC UTILITIES
COMMISSION OF OHIO
2007 FEB -9 PM 12:33
RAIL DIVISION

05-Feb-07

Detailed Estimate for Grade Crossing Warning Devices

City/State: SPRINGFIELD, OH
MilePost: CJ-184.93
State Proj. No.:
S&E Proj. No.: 10.1004
Man Days: 112

Road: SNYDER ST.
DOT/AAR: 523506J
County: CLARK
AFE: F10119
File Number: 061-10.0492

*****Purchases - Others*****		
Meals and Lodging:	$10,538.04	
Rental of Equipment:	$23,038.40	
(2 Trucks, 1 Backhoe w/ Trailer and 1 Pipe-Pusher for 28 Days)		
Construction Supervision Vehicle:	$1,843.07	
Purchases - Other Total:		$35,419.51
*****Material And Additives*****		
Material Cost:	$71,595.00	
Sales and Use Tax:	$0.00	
Material Handling Freight:	$3,579.75	
Material Total:		$75,174.75
*****Labor And Additives*****		
Labor Cost:	$27,104.00	
(4 man crew at $968.00 a day for: 28 days)		
Payroll Tax & Overheads:	$26,738.10	
Preliminary Engineering:	$8,685.51	
Construction Supervision:	$7,651.46	
Labor Total:		$70,179.07
	Project Cost:	$180,773.33
	Scrap / Salvage Credit:	$0.00
	Project Total:	**$180,773.33**

Estimated on: 05-Feb-07

Estimated by: ndr3j

Estimate valid for 1 year from date of estimate

Norfolk Southern Railway

Highway Crossing Signalization Program - Material List

Do not substitute items without permission from S & E Engineering

City:	SPRINGFIELD
Road:	SNYDER ST.
Mile Post:	CJ-184.93
Drawing Number:	82111850
State ProjectNumber:	
County:	CLARK
A A R Number:	523506J
Project Number:	10.1004
File Number:	061-10.0492
New File Number:	
A F E Number:	F10119
Store Number:	07863
Supervisor:	D.M. FRANCIS
Tax Code:	3500

Vendor to supply the following copies after pricing:

1 Set - Material Management with original Invoice
2 Sets - with plans shipped in car with material
1 Set - S&EGen. Supt. Construction w/copy of invoice

Location: SPRINGFIELD OH S&E Proj. No.: 10.1004 AFE No.: F10119 Drawing No.: 82111850

Store No.: 07863 P.O.Number: Date Required: Date Shipped: Vendor: SW Signal Engineering Company

Qty.	Class-Item-CD	UI	Price per Item	Total Price	Item Description	Quantity Shipped	Quantity Installed Date Quan.	Date Quan.	Date Quan.	Quantity Returned (Credit)	Special Instructions
3	670-360693-4	EA	$5.04	$15.12	AAR/DOT NUMBER PLATE/DECAL, ORDER 3 PER PROJECT. 60 DAY LEAD TIME. SUPPLIED BY S'TRAN.						
1	165-006505-4	EA	$1,051.54	$1,051.54	AC SERVICE, COMPLETE LESS METER BASE, ASSEMBLED ON 30' POLE						
8	670-119241-4	EA	$32.80	$262.40	ARRESTOR, LIGHTNING HEAVY DUTY CLEAR VIEW SAFETRAN 022585-1X						
13	105-871901-4	EA	$161.57	$2,100.41	BATTERY,GNB 265AH MODEL 50A11 SINGLE CELL 2.25 VOLTS						
2	670-980689-4	EA	$71.71	$143.42	BRACKET HIGH WIND, (RIGID 3'), WIG- 191036, WALRUS TUSK TYPE						
2	670-561375-4	EA	$1,197.90	$2,395.80	BRACKET, GATE SAVER, NEG385102GS, SPRING LOADED SWING AWAY ADAPTER FOR FIBERGLASS/ALUMINUM GATES, USE WITH GATE 28' AND LESS						
1	670-356949-4	EA	$97.00	$97.00	CABLE, 10' GENERATOR HOOK UP, SERRMI P/N 40524. FEMALE CONNECTOR						
300	465-292862-4	LF	$1.04	$312.00	CABLE, U-2-6 TWISTED, S-23 OKONITE 113-12-3933 SOLID TINNED CONDUCTOR						
800	465-292945-4	LF	$1.35	$1,080.00	CABLE, U-5-14, S-54 OKONITE 206-14-6885						
300	465-292929-4	LF	$3.05	$915.00	CABLE, U.G. 5 COND. NO. 6 AWG SOLID COPPER CABLE TO MEET NS CORP. SPEC. FOR SIGNAL						
600	465-939422-4	LF	$2.55	$1,530.00	CABLE, UG 12 CONDUCTOR NO 14 AWG SOLID EACH CONDUCTOR WITH 5/64 IN INSULATION 10 MIL						
300	465-791835-4	FT	$2.22	$666.00	CABLE, UG AC ENTRANCE 3C#6-7X OKONITE FMPF-L 094-078 TR W/G 1 X 8 7X W010 BRZ TAPE 600V PRODUCT CODE 206-11-6070						
120	165-544477-4	FT	$2.55	$306.00	CONDUIT, 4"x10' PVC, SCHEDULE 80 BELL CONNECTOR AT ONE END, 1/2 PT. GLUE IN KIT 670-123298-4						
2	670-090450-4	EA	$50.38	$100.76	CONNECTOR,WELDED FAR RAIL HARMON A1000-2W						
2	670-486646-4	EA	$41.62	$83.24	CONNECTOR,WELDED NEAR RAIL HARMON A1000-1W						
2	670-793404-4	EA	$838.37	$1,676.74	COUNTERWEIGHT PKAGE, 17-24'GATE S'TRAN S- MECH ONLY, STAINLESS, TO INCLUDE HUB, SUPPORT ARMS						
4	670-760012-4	EA	$40.02	$160.08	COVER, FOR 1 WAY FLASHING LIGHT ASSY. 18 OZ. BLACK VINYL COATED NYLON. ====TO COVER 2 LAMPS====						

APPROVED BY STATE	APPROVED BY RAILROAD	CAR NUMBER	SEAL NUMBER

Location: SPRINGFIELD OH S&E Proj. No.: 10.1004 AFE No.: F10119 Drawing No.: 82111850

Store No.: 07863 P.O.Number: Date Required: Date Shipped: Vendor: SW Signal Engineering Company

Qty.	Class-Item-CD	UI	Price per Item	Total Price	Item Description	Quantity Shipped	Quantity Installed Date Quan.	Date Quan.	Date Quan.	Quantity Returned (Credit)	Special Instructions
1	670-986650-4	EA	$375.69	$375.69	DISPOSAL, CONSTRUCTION DEBRIS AND CLEANING X'ING EQUIPMENT CONTAINER						
1	670-000004-4	EA	$700.00	$700.00	FCC LICENSE FOR MONITOR/RADIO						
5	670-000003-4	EA	$255.85	$1,279.25	FILL/STONE #57, QUANITY IS BASED ON TRUCK LOAD PLUS DELIVERY COST						
2	670-015231-4	EA	$423.50	$847.00	FOUNDATION,DIXIE,S-2 GATE 5'6" ASSEMBLED						
2	670-257031-4	EA	$297.88	$595.76	GATE, ARM FIBERGLASS-ALUMINUM 17-24 FT., INCLUDES GATE GUARD FOR GATE LIGHT CABLE, NEG P/N 8002-244NFS/CG						
1	670-730154-4	EA	$43.57	$43.57	INDUCTOR, SIMULATED TRACK SAFETRAN 8V617-2000						
1	670-477991-4	EA	$317.90	$317.90	KIT, GROUNDING ASSY FOR AL I/S INCLUDES 8 GRD RDS,200'#4WIRE,12 4 WIRE ONE-SHOTS. ERICO SBK206						
1	670-123298-4	EA	$256.93	$256.93	KIT, HARDWARE SUPPLIES REQUIRED X'ING P'CKAGES. WEB CONNECTORS FOR SHUNT(8EA) TAPE, AMPS,P'GUM PAINT,SLEEVES,TAGS,GLUE, 100 EA WHITE TAGS,)NE CAN BLUE MARKING PAINT ETC...						
2	670-764166-4	EA	$907.65	$1,815.30	LAMP ASSY, 5" MAST MTG. 2W IND. 20" BKGRD, FLX-12 W/BULB S'TRAN #042003-487XNS						
6	165-643547-4	EA	$4.30	$25.80	LAMP, 18 WATT 10 VOLT S-11 SC BAY 18S11/1SC CLEAR RWY SIGNAL UJ-71463 GE						
8	670-440826-4	EA	$1.01	$8.08	LINK, SAFETRAN 024620-1X INSL TESTING COMP 1 IN CENTER SIGNAL CIRCUITS CR 02-286662						
4	255-590880-4	EA	$16.12	$64.48	LOCK, AMERICAN LOCK MODEL H-10KA KEYED ALIKE TO PRIVATE KEYWAY D456 AND STAMPED "NS SIG"						
2	670-637778-4	EA	$1,031.41	$2,062.82	MAST, 5" ALUMINUM 13'10" WITH DOUBLE JCT. BOX BASE. S'TRAN P# 070519-11AX.						
2	670-850933-4	EA	$3,352.65	$6,705.30	MECHANISM, GATE MODEL S-60, WITH DEFROSTER AND MINI TRACKSIDE SENSOR S'TRAN # 0740007-X002B3						
7	670-000001-4	EA	$316.23	$2,213.61	MISC. MATERIAL						
2	670-001347-4	EA	$63.27	$126.54	PACKAGE, HARDWARE SIGN 5 IN. MOUNTING, SERRMI A1250-5, HARMON @200965-000, OR						

APPROVED BY STATE	APPROVED BY RAILROAD	CAR NUMBER	SEAL NUMBER

Location: SPRINGFIELD OH S&E Proj. No.: 10.1004 AFE No.: F10119 Drawing No.: 82111850

Store No.: 07863 P.O.Number: Date Required: Date Shipped: Vendor: SW Signal Engineering Company

Qty.	Class-Item-CD	UI	Price per Item	Total Price	Item Description	Quantity Shipped	Quantity Installed Date Quan.	Date Quan.	Date Quan.	Quantity Returned (Credit)	Special Instructions
1	255-646807-4	EA	$10.38	$10.38	PADLOCK, SAFETRAN PART NO. 030399-29X SCREW TYPE FOR CIR CONTROLLER AND BTY. BOX						
1	610-719870-4	EA	$135.90	$135.90	PEDESTAL ASSEMBLY, ARMORCAST P/N P6001205-NS, YELLOW 10"X11"X29" POLYETHYLENE INCL 45" WITH TERMINAL BLOCK						
1	670-514605-4	EA	$8.45	$8.45	PINNACLE, W-C SECT 1-11, 4"& 5" REF K1 110-8 OR SAFETRAN NO. @035045-503X						
2	670-555609-4	EA	$45.12	$90.24	PLUGBOARD, TYPE B-1 GRS A62-506 OR HARMON @7062-506 OR						
1	670-427136-4	EA	$93.49	$93.49	POWER OFF LAMP INDICATOR FOR SHELTER, SAFETRAN P/N 051958-5						
1	165-902002-4	EA	$308.00	$308.00	PROTECTOR, SURGE 120/240VAC, ERICO P/N EPD120/240TDFL						
5	465-002899-4	EA	$22.06	$110.30	REEL, CABLE DISPOSABLE FOR CROSSING SIGNAL PACKAGES						
1	670-742096-4	EA	$41.80	$41.80	RELAY INTERFACE PROBE, ULTRATECH PN 16031-00						
2	670-707995-4	EA	$313.67	$627.34	RELAY, TYPE B1, NEV LINE, 900 OHMS,.008 AMPERES GRS A62-308 OR SAFETRAN @400003						
2	435-805560-4	EA	$6.25	$12.50	SAND, 25LB BAG FOR CABLE ENTRANCE INTO THE SHELTER						
1	670-816502-4	EA	$4,903.75	$4,903.75	SEARII AUTOMATED INSPECTOR SYSTEM KIT, w/ 1-iLOD,1-eBELL, 2-GTS, WITHOUT MTSS, 1-GFT,1-VHFC, 2- RECORDER INTERFACE MODULE, 1-ECHELON CONNECTOR						
1	670-281280-4	EA	$7,006.00	$7,006.00	SHELTER BARE 6X6, ALUMN, FARADAY, W/CABLE CHUTES BEHIND TERMINAL BOARD, W/GEN. CONN. W/ADJUSTABLE PIERS, ,SAFTETRAN P/N 058400-66-78A						
2	670-586967-4	EA	$37.68	$75.36	SHUNT COVER W/LAG SCREWS, 19"X19", SERRMI #40271, ORDER 1 PER SHUNT						
2	670-775391-4	EA	$438.32	$876.64	SHUNT, MULTI-FREQ. #62780-1543 SAFETRAN NARROW BAND-LOW LOADING						
2	670-393331-4	EA	$37.43	$74.86	SIGN CROSSING MALFUNCTION ASSEMBLY FOR 4" AND 5" MAST, SAFETRAN #T17215						
2	670-806648-4	EA	$56.42	$112.84	SIGN, X-BUCK, LESS HARDWARE, SAFETRAN 035200-X CR 02-490546						

APPROVED BY STATE	APPROVED BY RAILROAD	CAR NUMBER	SEAL NUMBER

Location: SPRINGFIELD OH S&E Proj. No.: 10.1004 AFE No.: F10119 Drawing No.: 82111850

Store No.: 07863 P.O.Number: Date Required: Date Shipped: Vendor: SW Signal Engineering Company

Qty.	Class-Item-CD	UI	Price per Item	Total Price	Item Description	Quantity Shipped	Quantity Installed Date Quan.	Date Quan.	Date Quan.	Quantity Returned (Credit)	Special Instructions
1	670-330382-4	RL	$15.68	$15.68	TAPE, THOR 3" DURATEC, ORANGE 1000' LENGTHS. "WARNING STOP DIGGING"						
17	670-478560-4	EA	$19.47	$330.99	TERMINAL BLOCK, ERICO 4 POST P/N B2700A2C1WH W/HARDWARE LESS LIGHTNING ARRESTOR						
2	165-917984-4	EA	$4.84	$9.68	TERMINAL, TEST, TYPE B GRS A62-515 OR HARMON @32118-001 OR						
2	610-065626-4	EA	$17.55	$35.10	ULTRA-TECH 15206-01 CONNECTIVITY BLOCK FOR GRS B1 RELAY						
6	670-007238-4	EA	$129.46	$776.76	UNIT, THE INSTALLATION AND WIRING OF A DEVICE WHICH REQUIRE A MINIMUM OF FOUR WIRE CONNECT-						
1	670-258957-4	EA	$25,580.50	$25,580.50	WIRED RACK, 6X6 FARADAY, 20AMP SINGLE TRK SSCCIIIA, GCP3000D2, 2 CRAGG CHARGER, 2 RELAY RACKS, SAFTRAN P/N 20A 1TRK, USE WITH I/S 670-281280-4 W/CABLE CHUTES BEHIND THE FARADAY SHIELD						
1	450-986008-4	EA	$24.84	$24.84	WRENCH, TEST POST TYPE B DWG 55393-3, GR.1						

Total Material: $71,594.94

APPROVED BY STATE	APPROVED BY RAILROAD	CAR NUMBER	SEAL NUMBER

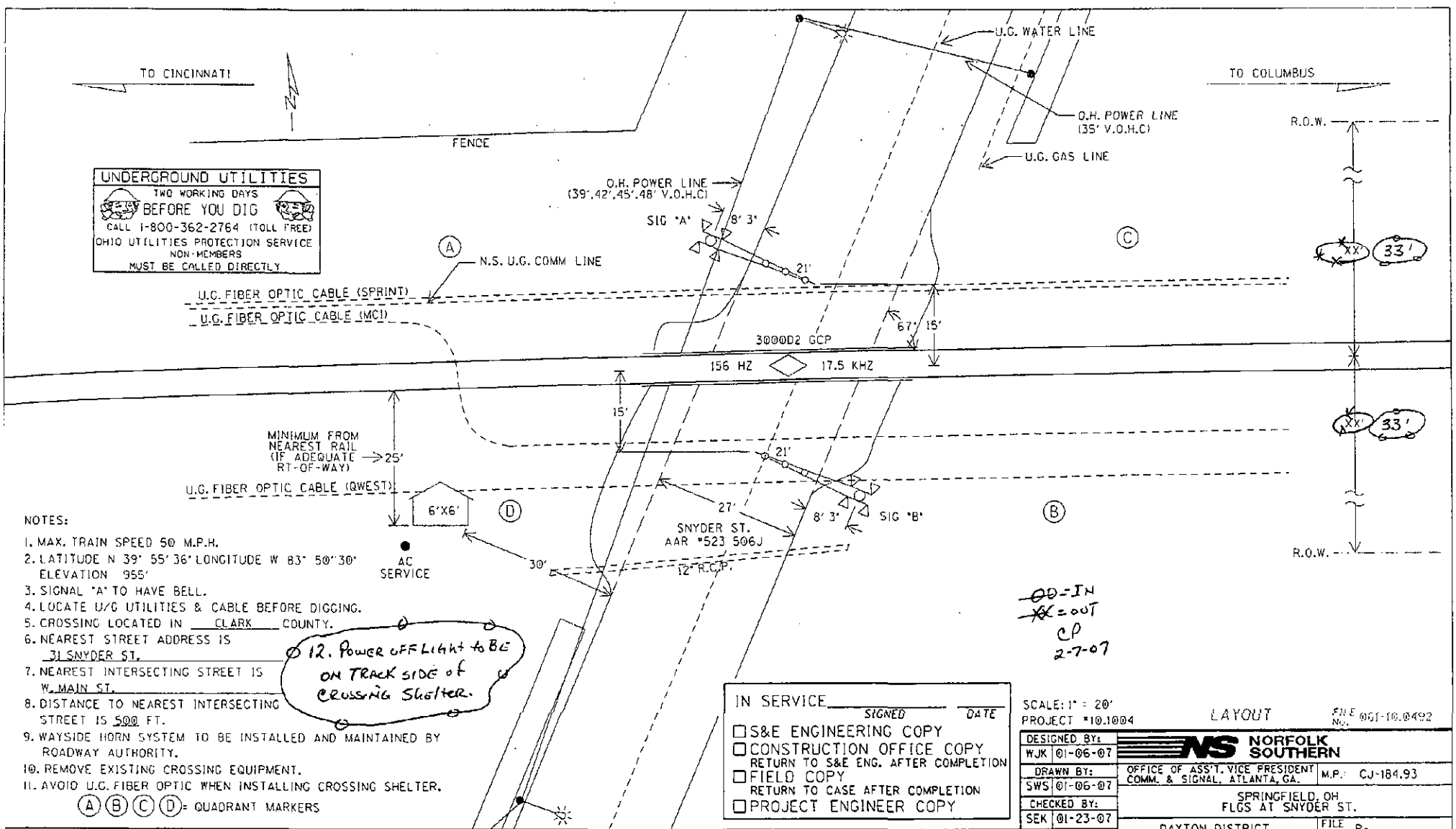

NOTES:

1. MAX. TRAIN SPEED 50 M.P.H.
2. LATITUDE N 39° 55' 36" LONGITUDE W 83° 50' 30" ELEVATION 955'
3. SIGNAL "A" TO HAVE BELL.
4. LOCATE U/G UTILITIES & CABLE BEFORE DIGGING.
5. CROSSING LOCATED IN CLARK COUNTY.
6. NEAREST STREET ADDRESS IS 31 SNYDER ST.
7. NEAREST INTERSECTING STREET IS W. MAIN ST.
8. DISTANCE TO NEAREST INTERSECTING STREET IS 500 FT.
9. WAYSIDE HORN SYSTEM TO BE INSTALLED AND MAINTAINED BY ROADWAY AUTHORITY.
10. REMOVE EXISTING CROSSING EQUIPMENT.
11. AVOID U.G. FIBER OPTIC WHEN INSTALLING CROSSING SHELTER.

(A) (B) (C) (D) = QUADRANT MARKERS

12. Power off Light to be on track side of crossing shelter.

IN SERVICE _____ SIGNED _____ DATE

- ☐ S&E ENGINEERING COPY
- ☐ CONSTRUCTION OFFICE COPY — RETURN TO S&E ENG. AFTER COMPLETION
- ☐ FIELD COPY — RETURN TO CASE AFTER COMPLETION
- ☐ PROJECT ENGINEER COPY

SCALE: 1" = 20'
PROJECT #10.1004

LAYOUT

FILE No. 061-10.0492

DESIGNED BY: WJK 01-06-07	NORFOLK SOUTHERN
DRAWN BY: SWS 01-06-07	OFFICE OF ASS'T. VICE PRESIDENT COMM. & SIGNAL, ATLANTA, GA. — M.P.: CJ-184.93
CHECKED BY: SEK 01-23-07	SPRINGFIELD, OH FLGS AT SNYDER ST.
IN SERVICE: - -	DAYTON DISTRICT — FILE No. R-
	CADD or DWG. No. 82111850.01 — SHEET No. 1 of 19

REVISION INITIALS											PROPERTY PENNSYLVANIA R.R.

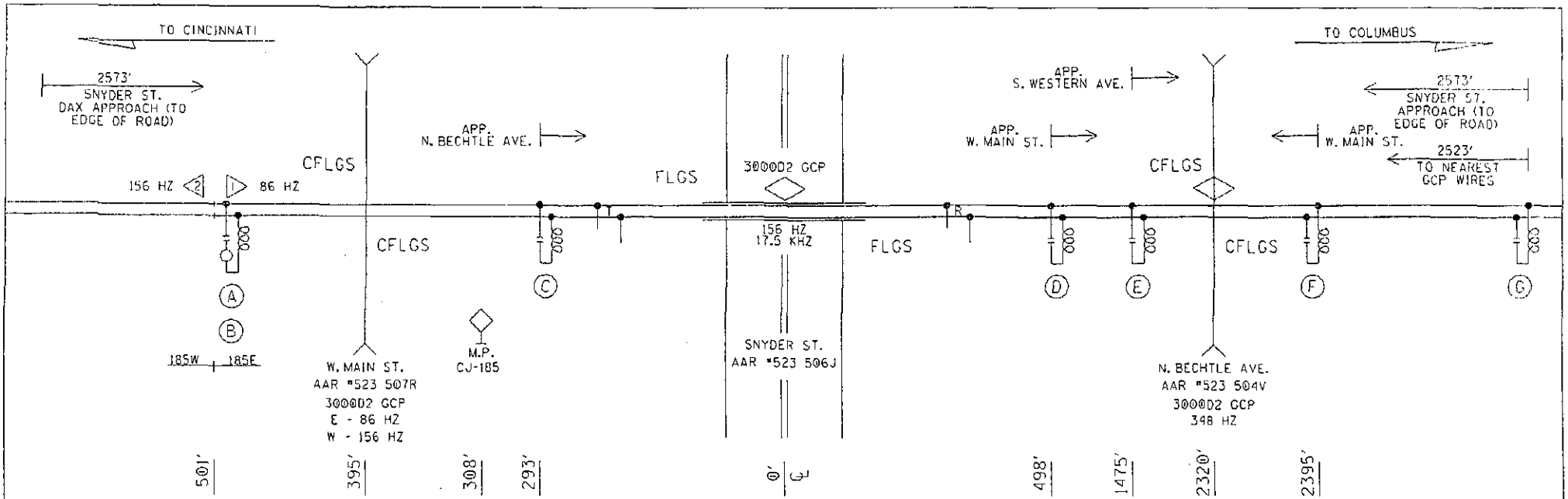

Ⓐ- MF-NBS 62780-8621 (86HZ) W/8V617-2800

Ⓑ- MF-NBS 62780-8621 (156HZ) W/8V617-2200

Ⓒ- MF-NBS 62780-1543 (348HZ)

Ⓓ- MF-NBS 62780-1543 (211HZ)

Ⓔ- MF-NBS 62780-8621 (114HZ)

Ⓕ- MF-NBS 62780-8621 (86HZ)

Ⓖ- MF-NBS 62780-8621 (156HZ)

PROFILE

DESIGNED BY: WJK 01-06-07	NORFOLK SOUTHERN		
DRAWN BY: SWS 01-06-07	OFFICE OF ASS'T. VICE PRESIDENT COMM. & SIGNAL, ATLANTA, GA.	M.P.: CJ-184.93	
CHECKED BY: SEK 01-23-07	SPRINGFIELD, OH FLGS AT SNYDER ST.		
IN SERVICE: - -	DAYTON DISTRICT	FILE No. R-	
	CADD or DWG. No. 82111850.02	SHEET No. 2 of 19	

REVISION INITIALS										

PROPERTY
PENNSYLVANIA R.R.

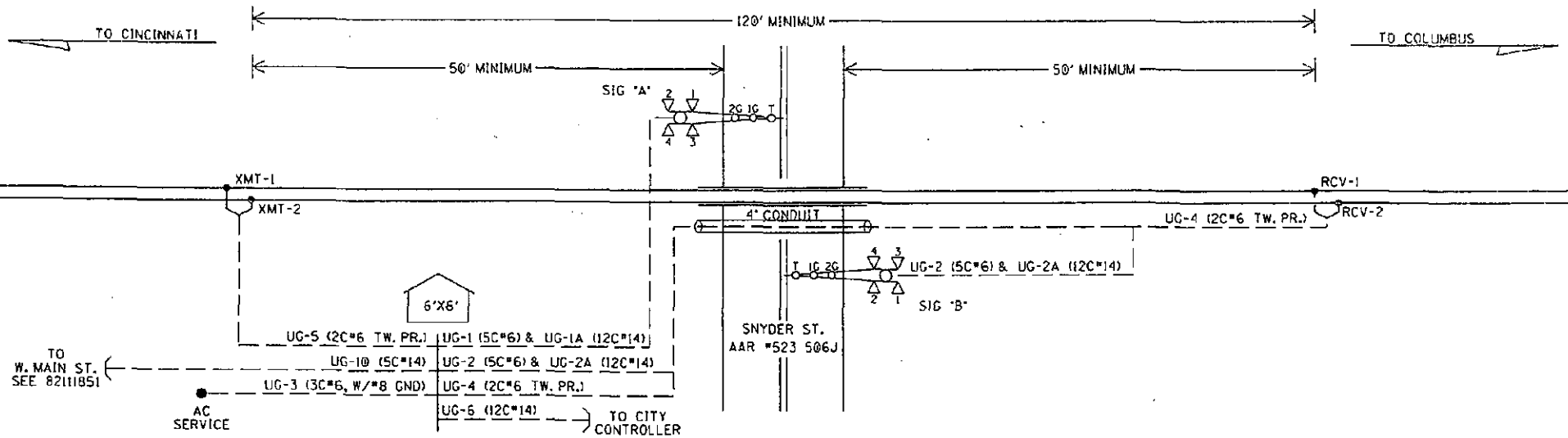

UG-1-5CUG #6
- AEC
- AEZ
- AEB
- BI6-A
- NI6-A

UG-2-5CUG #6
- BEC
- BEZ
- BEB
- BI6-B
- NI6-B

UG-1A-12CUG #14
- AXG
- NAXG
- AXX
- IAXX
- XGPI
- AGBX120
- AGNX120
- AMTSS
- SPARE
- SPARE
- SPARE
- SPARE

UG-2A-12CUG #14
- BXG
- NBXG
- BXX
- IBXX
- XGPI
- XGP
- BGBX120
- BGNX120
- BMTSS
- SPARE
- SPARE
- SPARE

UG-3-3CUG #6 W/#8 GND
- BX120-A
- BX120-B
- NX120
- GND

UG-4-TW. PR. #6
- RCV-1
- RCV-2

UG-5-TW. PR. #6
- XMT-1
- XMT-2

UG-6-12CUG #14
- INT1
- INT2
- SUPV
- HORN1
- HORN2
- HSUPV
- SPARE
- SPARE
- SPARE
- SPARE
- SPARE
- SPARE

UG-10-5CUG #14
- SDAX
- NSDAX
- SPARE
- SPARE
- SPARE

CABLE PLAN

DESIGNED BY: WJK 01-06-07	NORFOLK SOUTHERN	
DRAWN BY: SWS 01-06-07	OFFICE OF ASS'T. VICE PRESIDENT COMM. & SIGNAL, ATLANTA, GA.	M.P.: CJ-184.93
CHECKED BY: SEK 01-23-07	SPRINGFIELD, OH FLGS AT SNYDER ST.	
IN SERVICE: - -	DAYTON DISTRICT	FILE NO. R-
	CADD or DWG. NO. 82111850.03	SHEET NO. 3 of 19

REVISION INITIALS	SWS 02-05-07										

PROPERTY
PENNSYLVANIA R.R.

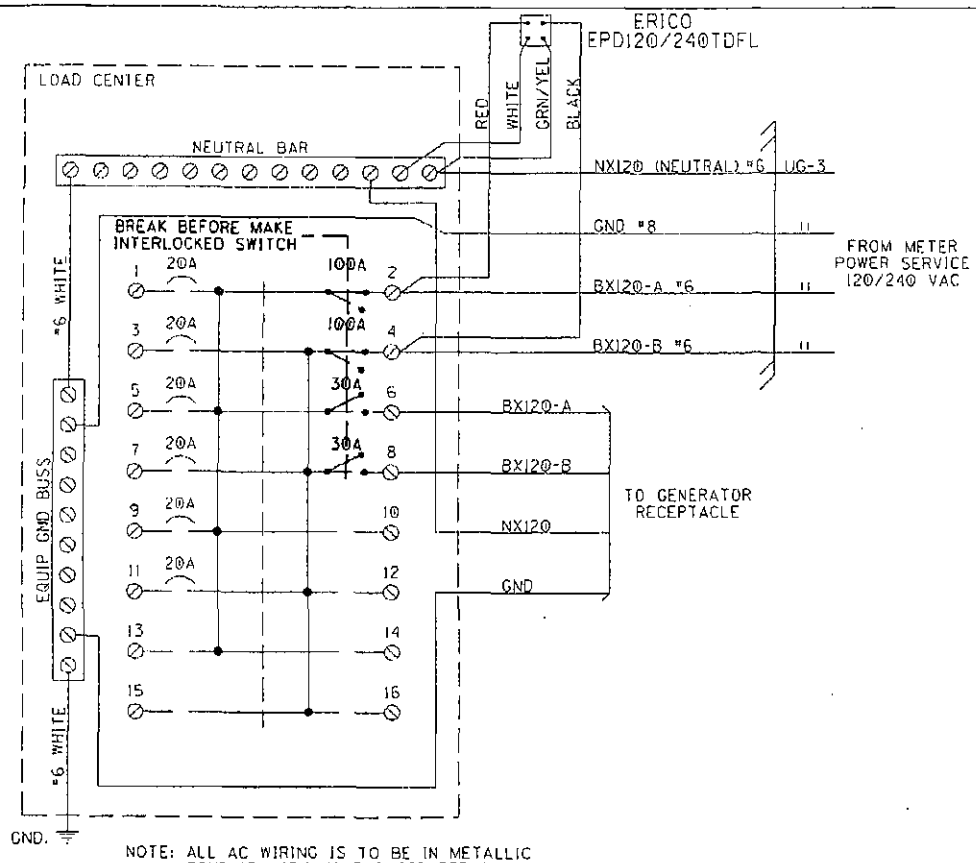

NOTE: ALL AC WIRING IS TO BE IN METALLIC CONDUIT WITH NO EXPOSED TERMINALS. ALL AC 120V AND 240V EQUIPMENT IS TO BE PROPERLY GROUNDED.

SQUARE "D" PART NUMBERS:

LOAD CENTER — Q0116L125G
10A 1P CIR BKR — Q0110
20A 1P CIR BKR — Q0120
30A 1P CIR BKR — Q0130
30A 2P CIR BKR — Q0230
60A 2P CIR BKR — Q0260
100A 2P CIR BKR — Q02100
MECH INTERLOCK — PK4DTIM4LA

GENERATOR RECEPTACLE:
MALE CONNECTOR - NEMA L1430-FI

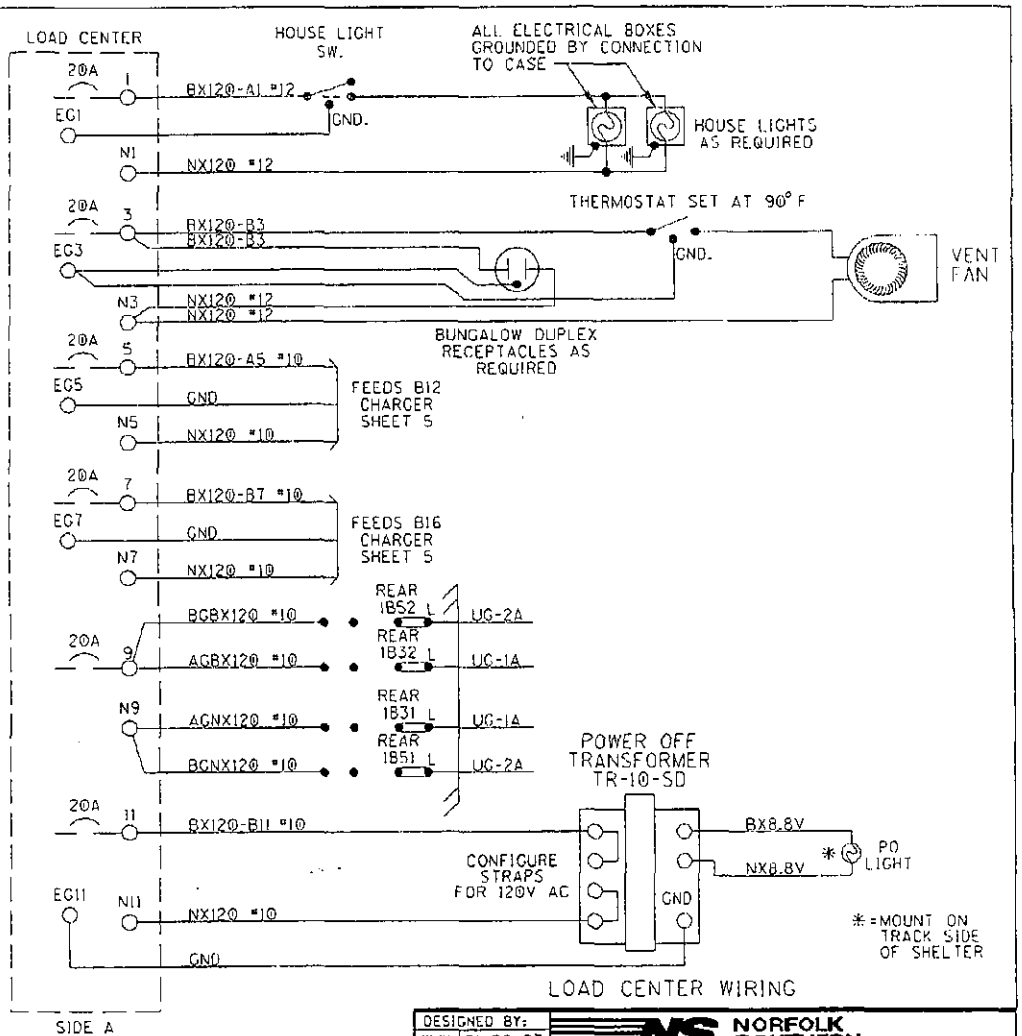

LOAD CENTER WIRING

DESIGNED BY: WJK 01-06-07	NORFOLK SOUTHERN		
DRAWN BY: SWS 01-06-07	OFFICE OF ASS'T. VICE PRESIDENT COMM. & SIGNAL, ATLANTA, GA.	M.P.: CJ-184.93	
CHECKED BY: SEK 01-23-07	SPRINGFIELD, OH FLGS AT SNYDER ST.		
IN SERVICE:	DAYTON DISTRICT	FILE No. R-	
	CADD or DWG. No. 82111850.04	SHEET No. 4 of 19	

REVISION INITIALS											

PROPERTY
PENNSYLVANIA R.R.

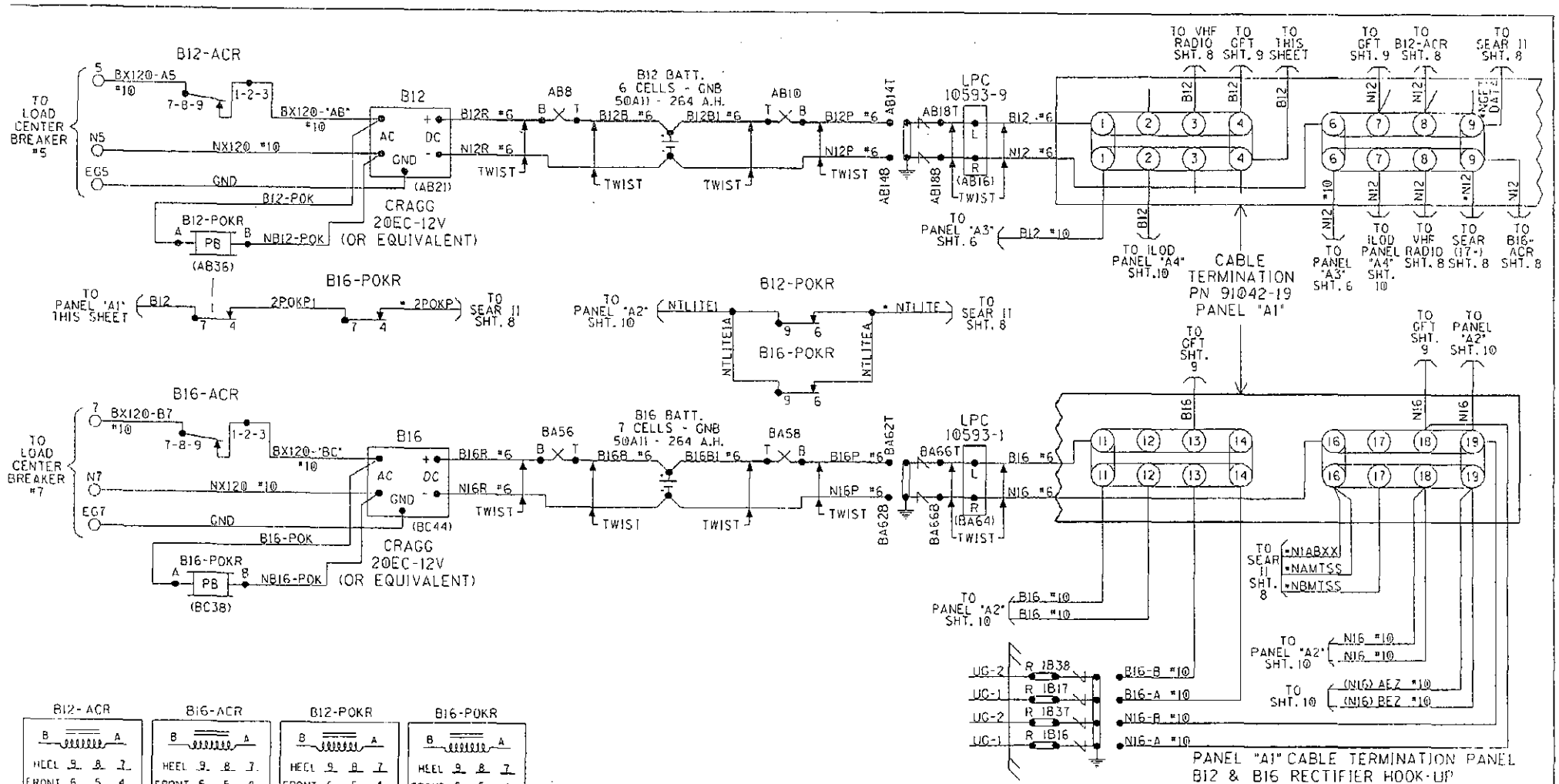

NOTES:
ALL WIRING TO BE #16AWG UNLESS NOTED OTHERWISE.
* = CABLE PROVIDED WITH SEAR 11

REVISION INITIALS									

PROPERTY
PENNSYLVANIA R.R.

DESIGNED BY: WJK 01-06-07	NORFOLK SOUTHERN
DRAWN BY: SWS 01-06-07	OFFICE OF ASS'T. VICE PRESIDENT COMM. & SIGNAL, ATLANTA, GA. — M.P.: CJ-184.93
CHECKED BY: SEK 01-23-07	SPRINGFIELD, OH FLGS AT SNYDER ST.
IN SERVICE: - -	DAYTON DISTRICT — FILE NO. R-
	CADD or DWG. NO. 82111850.05 — SHEET NO. 5 of 19

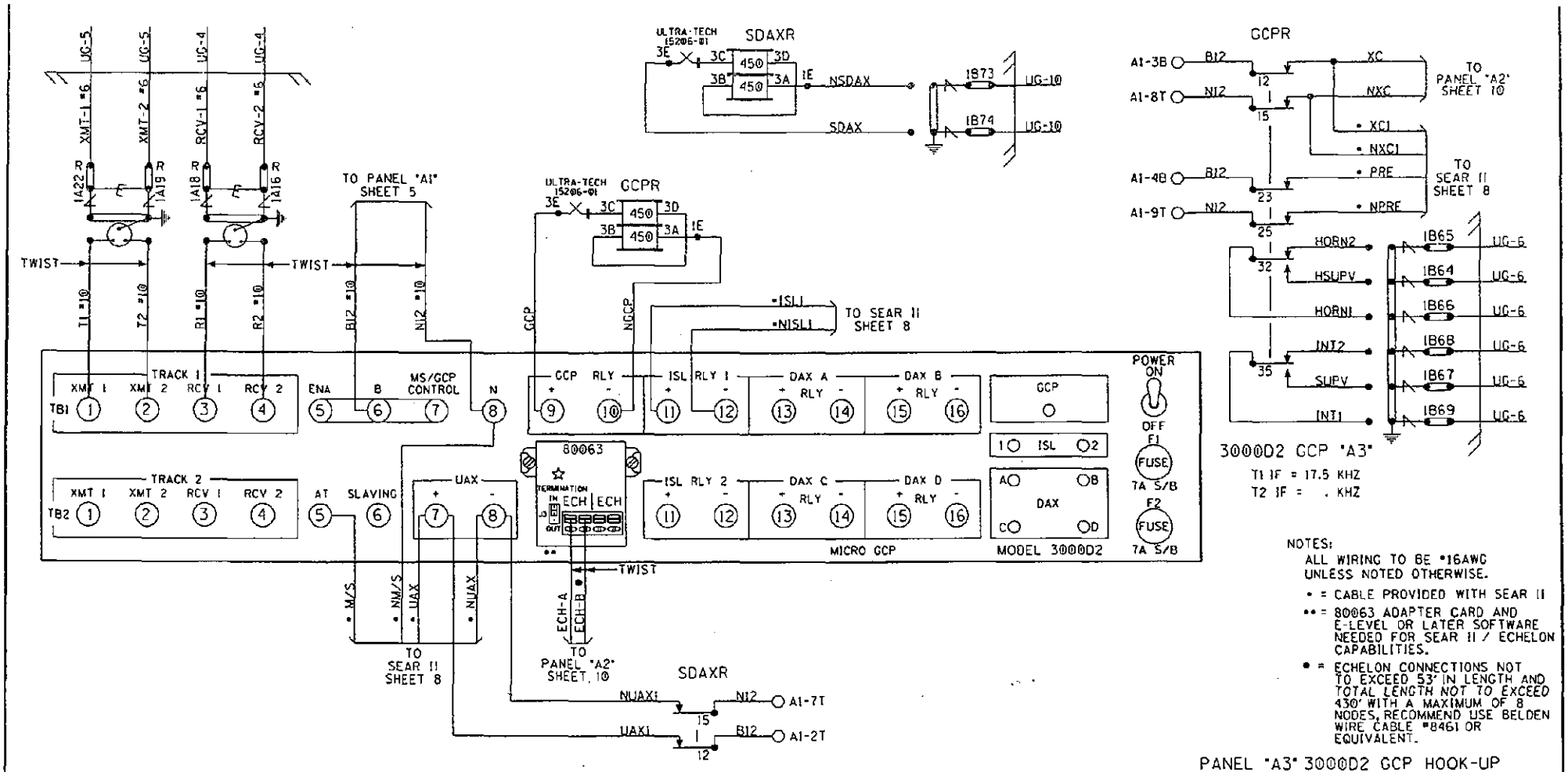

NOTES:

ALL WIRING TO BE #16AWG UNLESS NOTED OTHERWISE.

• = CABLE PROVIDED WITH SEAR II

•• = 80063 ADAPTER CARD AND E-LEVEL OR LATER SOFTWARE NEEDED FOR SEAR II / ECHELON CAPABILITIES.

• = ECHELON CONNECTIONS NOT TO EXCEED 53' IN LENGTH AND TOTAL LENGTH NOT TO EXCEED 430' WITH A MAXIMUM OF 8 NODES, RECOMMEND USE BELDEN WIRE CABLE #8461 OR EQUIVALENT.

☆ = 80063 ECHELON RJ45 CONNECTOR TERMINATION J3 TO BE SET "IN" WHEN AT END OF ECHELON NETWORK.

PANEL "A3" 3000D2 GCP HOOK-UP

DESIGNED BY: WJK 01-06-07	NORFOLK SOUTHERN	
DRAWN BY: SWS 01-06-07	OFFICE OF ASS'T. VICE PRESIDENT COMM. & SIGNAL, ATLANTA, GA.	M.P.: CJ-184.93
CHECKED BY: SEK 01-23-07	SPRINGFIELD, OH FLGS AT SNYDER ST.	
IN SERVICE: - -	DAYTON DISTRICT	FILE No. R-
	CADD or DWG. No. 82111850.06	SHEET No. 6 of 19

REVISION INITIALS	SWS 02-05-07								

PROPERTY: PENNSYLVANIA R.R.

3000D2 PROGRAMMING CHART	(LEVEL: J)
NUMBER OF TRACK TRANSCEIVERS	1
T1: FREQUENCY	156Hz
T2: FREQUENCY	---Hz
T1: UNIDIRECTIONAL/BIDIRECTIONAL	BI
T2: UNIDIRECTIONAL/BIDIRECTIONAL	---
T1: XMIT LEVEL (MAX/MED)	MAX
T2: XMIT LEVEL (MAX/MED)	---
T1: PREDICTOR/MOTION SENSOR	PRED
T2: PREDICTOR/MOTION SENSOR	----
T1: WARNING TIME	30 Sec
T2: WARNING TIME	-- Sec
T1: APPROACH DISTANCE	2523 Ft
T2: APPROACH DISTANCE	---- Ft
UAX1 PICKUP DELAY (UAX) (0 = OFF)	25 Sec
ENA/UAX2 DELAY (0 = ENA)	-- Sec
T1: ISLAND DISTANCE	148 Ft
T2: ISLAND DISTANCE	--- Ft
NUMBER OF DAX'S	0 Ea
DAX A TRACK ASSIGNMENT (T1/T2)	---
DAX A DISTANCE (0 = PREEMPT)	Ft
DAX A WARNING TIME	Sec
DAX B TRACK ASSIGNMENT (T1/T2)	---
DAX B DISTANCE (0 = PREEMPT)	Ft
DAX B WARNING TIME	Sec
DAX C TRACK ASSIGNMENT (T1/T2)	---
DAX C DISTANCE (0 = PREEMPT)	Ft
DAX C WARNING TIME	Sec
DAX D TRACK ASSIGNMENT (T1/T2)	---
DAX D DISTANCE (0 = PREEMPT)	Ft
DAX D WARNING TIME	Sec
SLAVING (MASTER/SLAVE)	MASTER
PASSWORD ENABLED	NO
RECORDER INSTALLED	NO

EXPANDED PROGRAMMING

T1: SWITCH TO MS (ENTER EZ VALUE)	10 %	
T2: SWITCH TO MS (ENTER EZ VALUE)	-- %	
T1: TRANSFER DELAY MS TO GCP (0 = OFF)	0 Sec	
T2: TRANSFER DELAY MS TO GCP (0 = OFF)	-- Sec	
T1: TRANSFER MS TO GCP PRIME (ON/OFF)	---	(1)
T2: TRANSFER MS TO GCP PRIME (ON/OFF)	---	(1)
T1: TRANSFER MS TO GCP DAX A (ON/OFF)	---	(2)
T2: TRANSFER MS TO GCP DAX A (ON/OFF)	---	(2)
T1: TRANSFER MS TO GCP DAX B (ON/OFF)	---	(2)
T2: TRANSFER MS TO GCP DAX B (ON/OFF)	---	(2)
T1: TRANSFER MS TO GCP DAX C (ON/OFF)	---	(2)
T2: TRANSFER MS TO GCP DAX C (ON/OFF)	---	(2)
T1: TRANSFER MS TO GCP DAX D (ON/OFF)	---	(2)
T2: TRANSFER MS TO GCP DAX D (ON/OFF)	---	(2)
T1: PRIME PREDICTION OFFSET (0 = OFF)	-- Ft	
T2: PRIME PREDICTION OFFSET (0 = OFF)	-- Ft	
PICKUP DELAY PRIME	15 Sec	
PICKUP DELAY DAX A	-- Sec	
PICKUP DELAY DAX B	-- Sec	
PICKUP DELAY DAX C	-- Sec	
PICKUP DELAY DAX D	-- Sec	
T1: ENHANCED DETECTION (ON/OFF)	OFF	
T2: ENHANCED DETECTION (ON/OFF)	---	
BACK-TO-BACK T1 AND T2 (NO/YES)	---	(3)
T1: STATION STOP TIMER	-- Sec	(3)
T2: STATION STOP TIMER	-- Sec	(3)
T1: NUMBER OF TRACK WIRES (4/6)	4	
T2: NUMBER OF TRACK WIRES (4/6)	-	
T1: LOW EX ADJUSTMENT	0	
T2: LOW EX ADJUSTMENT	--	
T1: LOW EZ DETECTION	OFF	
T2: LOW EZ DETECTION	---	
T1: LOW EZ DETECTION TIMER (ON/OFF)	-- Min	(4)
T2: LOW EZ DETECTION TIMER (ON/OFF)	-- Min	(4)
T1: POSITIVE START (EZ LEVEL) (0 = OFF)	0	
T2: POSITIVE START (EZ LEVEL) (0 = OFF)	--	
T1: POSITIVE START TIMEOUT (0 = NONE)	-- Min	(5)
T2: POSITIVE START TIMEOUT (0 = NONE)	-- Min	(5)
SET AT OPERATION (NORMAL/DIAGNOSTIC)	NORMAL	
DIAGNOSTIC MESSAGES (ON/OFF)	ON	
DAX MESSAGES (ON/OFF)	ON	
ADVANCE PREEMPT TIMER (0 = OFF)	0	
T1: MOTION SENSING LEVEL (0 = NORMAL)	0 %	
T2: MOTION SENSING LEVEL (0 = NORMAL)	-- %	

3000D2 PROGRAMMING NOTES:

1) AVAILABLE WHEN "TRANSFER DELAY MS TO GCP" AND "PRIME PREDICTION OFFSET" IS ON
2) AVAILABLE WHEN "TRANSFER DELAY MS TO GCP" AND DAX DISTANCE IS GREATER THAN ZERO
3) AVAILABLE WHEN "ENHANCED DETECTION" IS ON
4) AVAILABLE WHEN "LOW EZ DETECTION" IS ON
5) AVAILABLE WHEN "POSITIVE START" IS ON

* = 1ST SLOT AT LEFT END OF BAY

MODEL 3000D2 GCP MODULE ASSEMBLIES

	UPPER BAY										LOWER BAY										
MODULES POSITION	M1	M2	M3	M4	M5	M6	M7	M8	M9	M10	M11	M12	M13	M14	M15	M16	M17	M18	M19	M20	M21
MODULE NUMBERS	80211-f(1) * ISL	80211-f(2) ISL	80012 T/R 1	80012 T/R 2	80013 RLY DRV	80214 PROCS	80255 REC-INTF	80015 (1) DAX	80016 (2) DAX	80020 +80017	80211-f(1) * ISL	80211-f(2) ISL	80012 T/R 1	80012 T/R 2	80013 RLY DRV	80214 PROCS	80255 REC-INTF	80016 (1) DAX	80016 (2) DAX	80020 +80017	80028 XFRTLR
MODULES USED	x		x		x	x	x			x	x		x		x	x	x			x	x
							**										**				

NOTES:

1 - SEE IPI INSTRUCTION AND INSTALLATION MANUAL FOR 80211 ISLAND CALIBRATION PROCEDURE.

2 - TOGGLE SWITCH ON MOTHER BOARD:
UP = DUAL FREQ.
DOWN = SINGLE FREQ.

** = 80214 & 80255 (WITH JUMPER) CARDS AND E-LEVEL OR LATER SOFTWARE NEEDED FOR SEAR II / ECHELON CAPABILITIES.

PANEL "A3" 3000D2 GCP SET-UP

DESIGNED BY: WJK 01-06-07	NORFOLK SOUTHERN	
DRAWN BY: SWS 01-06-07	OFFICE OF ASS'T. VICE PRESIDENT COMM. & SIGNAL, ATLANTA, GA.	M.P.: CJ-184.93
CHECKED BY: SEK 01-23-07	SPRINGFIELD, OH FLGS AT SNYDER ST.	
IN SERVICE: - -	DAYTON DISTRICT	FILE No. R-
	CADD or DWG. No. 82111850.07	SHEET No. 7 of 19

REVISION INITIALS											PROPERTY PENNSYLVANIA R.R.

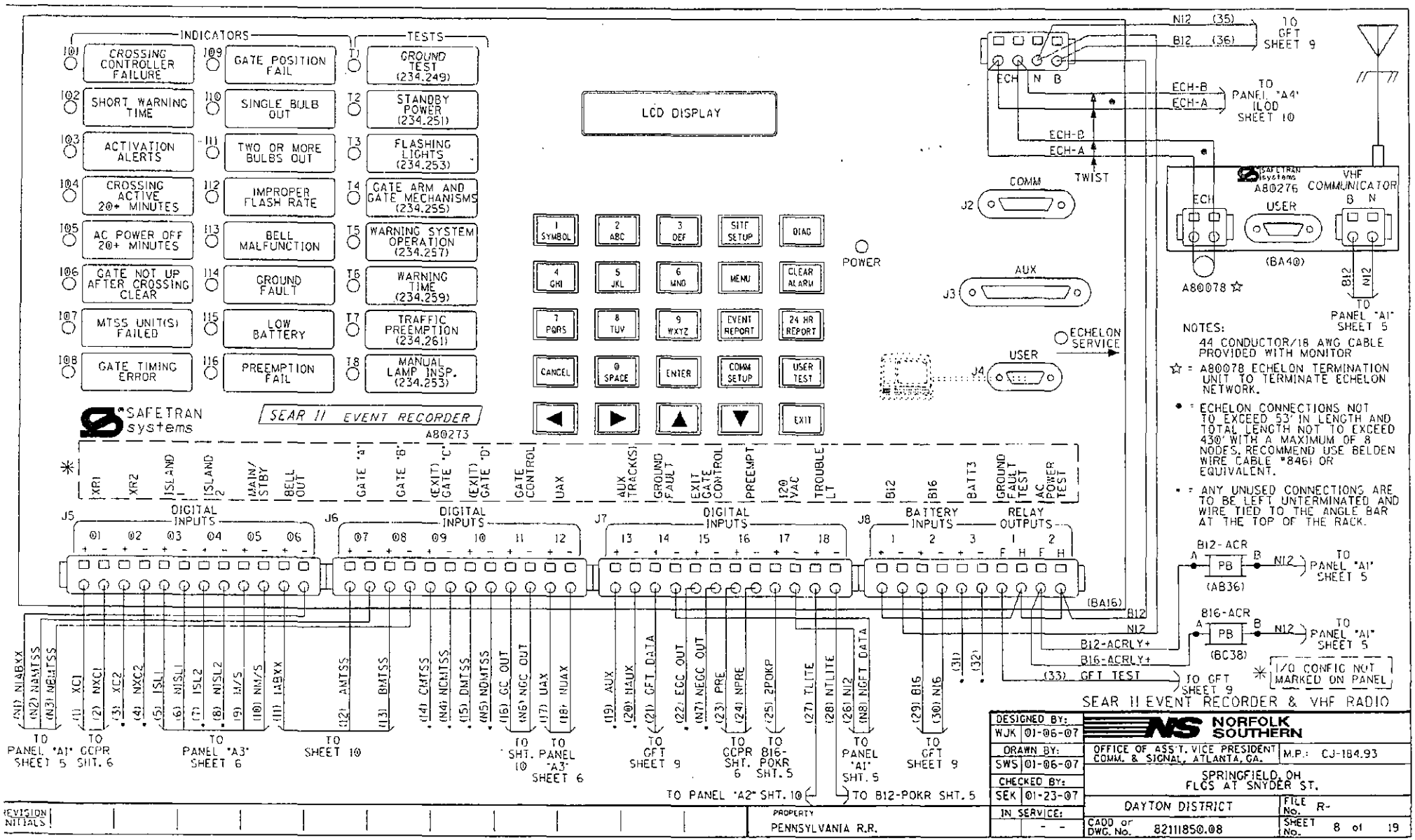
INDICATORS
TESTS
I01 CROSSING CONTROLLER FAILURE
I02 SHORT WARNING TIME
I03 ACTIVATION ALERTS
I04 CROSSING ACTIVE 20+ MINUTES
I05 AC POWER OFF 20+ MINUTES
I06 GATE NOT UP AFTER CROSSING CLEAR
I07 MTSS UNIT(S) FAILED
I08 GATE TIMING ERROR
I09 GATE POSITION FAIL
I10 SINGLE BULB OUT
I11 TWO OR MORE BULBS OUT
I12 IMPROPER FLASH RATE
I13 BELL MALFUNCTION
I14 GROUND FAULT
I15 LOW BATTERY
I16 PREEMPTION FAIL
T1 GROUND TEST (234.249)
T2 STANDBY POWER (234.251)
T3 FLASHING LIGHTS (234.253)
T4 GATE ARM AND GATE MECHANISMS (234.255)
T5 WARNING SYSTEM OPERATION (234.257)
T6 WARNING TIME (234.259)
T7 TRAFFIC PREEMPTION (234.261)
T8 MANUAL LAMP INSP. (234.253)
LCD DISPLAY
1 SYMBOL
2 ABC
3 DEF
SITE SETUP
DIAG
4 GHI
5 JKL
6 MNO
MENU
CLEAR ALARM
7 PQRS
8 TUV
9 WXYZ
EVENT REPORT
24 HR REPORT
CANCEL
0 SPACE
ENTER
COMM SETUP
USER TEST
EXIT
POWER
SAFETRAN systems
SEAR II EVENT RECORDER
A80273
XR1
XR2
ISLAND 1
ISLAND 2
MAIN/STBY
BELL OUT
GATE "A"
GATE "B"
(EXIT) GATE "C"
(EXIT) GATE "D"
GATE CONTROL
UAX
AUX TRACK(S)
GROUND FAULT
EXIT GATE CONTROL
PREEMPT
120 VAC
TROUBLE LT
B12
B16
BATT3
GROUND FAULT TEST
AC POWER TEST
J5 DIGITAL INPUTS 01 02 03 04 05 06
J6 DIGITAL INPUTS 07 08 09 10 11 12
J7 DIGITAL INPUTS 13 14 15 16 17 18
J8 BATTERY INPUTS 1 2 3 RELAY OUTPUTS 1 2
(N1) N1ABXX
(N2) NAMTSS
(N3) NBMTSS
(1) XC1
(2) NXC1
(3) XC2
(4) NXC2
(5) ISL1
(6) N1SL1
(7) ISL2
(8) N1SL2
(9) M/S
(10) NM/S
(11) 1ABXX
(12) AMTSS
(13) BMTSS
(14) CMTSS
(N4) NCMTSS
(15) DMTSS
(N5) NDMTSS
(16) GC OUT
(N6) NGC OUT
(17) UAX
(18) NUAX
(19) AUX
(20) NAUX
(21) GFT DATA
(22) ECC OUT
(N7) NECC OUT
(23) PRE
(24) NPRE
(25) 2POKP
(27) TLITE
(28) NTLITE
(26) N12
(N8) NGFT DATA
(29) B16
(30) N16
(31)
(32)
(BA16)
B12
N12
B12-ACRLY+
B16-ACRLY+
(33) GFT TEST
TO PANEL "A1" SHEET 5 SHT. 6
TO PANEL "A3" SHEET 6
TO SHEET 10
TO SHT. 10
TO PANEL "A3" SHEET 6
TO GFT SHEET 9
TO CCPR SHT. 6
TO B16-POKR SHT. 5
TO PANEL "A1" SHT. 5
TO GFT SHEET 9
TO PANEL "A2" SHT. 10
TO B12-POKR SHT. 5
TO GFT SHEET 9
N12 (35)
B12 (36)
TO GFT SHEET 9
ECH N B
ECH-B
ECH-A
TO PANEL "A4" ILOD SHEET 10
TWIST
COMM
J2
AUX
J3
USER
J4
ECHELON SERVICE
SAFETRAN systems
A80276
VHF COMMUNICATOR
ECH
USER
B N
(BA40)
A80078 ☆
B12
N12
TO PANEL "A1" SHEET 5
NOTES:
44 CONDUCTOR/18 AWG CABLE PROVIDED WITH MONITOR
☆ = A80078 ECHELON TERMINATION UNIT TO TERMINATE ECHELON NETWORK.
• = ECHELON CONNECTIONS NOT TO EXCEED 53' IN LENGTH AND TOTAL LENGTH NOT TO EXCEED 430' WITH A MAXIMUM OF 8 NODES. RECOMMEND USE BELDEN WIRE CABLE #8461 OR EQUIVALENT.
* = ANY UNUSED CONNECTIONS ARE TO BE LEFT UNTERMINATED AND WIRE TIED TO THE ANGLE BAR AT THE TOP OF THE RACK.
B12-ACR
A PB B
(AB36)
N12
TO PANEL "A1" SHEET 5
B16-ACR
A PB B
(BC38)
N12
TO PANEL "A1" SHEET 5
TO GFT SHEET 9
* I/O CONFIG NOT MARKED ON PANEL
SEAR II EVENT RECORDER & VHF RADIO
DESIGNED BY: WJK 01-06-07
DRAWN BY: SWS 01-06-07
CHECKED BY: SEK 01-23-07
IN SERVICE: - -
NORFOLK SOUTHERN
OFFICE OF ASS'T. VICE PRESIDENT COMM. & SIGNAL, ATLANTA, GA.
M.P.: CJ-184.93
SPRINGFIELD, OH
FLGS AT SNYDER ST.
DAYTON DISTRICT
FILE No. R-
CADD or DWG. No. 82111850.08
SHEET No. 8 of 19
REVISION INITIALS
PROPERTY
PENNSYLVANIA R.R.

SITE SET UP PROCEDURE	
FUNCTION	LED DISPLAY
DATE	- -
TIME	:
DAYLIGHT SAVINGS TIME	YES
TIME ZONE	EST
SITE NAME	SNYDER ST.
DOT NUMBER	523 506J
MILEPOST	CJ-184.93
TESTER TYPE	CROSSING
DATE FORMAT	MM-DD-YYYY
TEMP FORMAT	FAHRENHEIT
SITE TYPE	NO COMMUNICATION
SITE ATCS	7.RRR.LLL.GGG.03.01
*** OFFICE ATCS ADDRESS	2.550.01.9100
*** POLL ID	1
*** OFFICE F8/F9	YES
*** OFFICE COMM DEVICE	SPREAD SPECTRUM RADIO
*** DIAL MODEM PORT	AUX/COMM
*** PHONE NUMBER	(OFFICE NUMBER)
*** INIT STRING	(LEAVE BLANK)
*** BACKUP SITE ADDRESS 1	
*** BACKUP SITE ADDRESS 2	
*** FIELD COMM	
**** USER PORT	BAUD 57600, N, 8, 1, NONE
**** AUX PORT	BAUD 9600, N, 8, 1, NONE
**** COMM PORT	BAUD 9600, N, 8, 1, NONE

VERIFY NUMBER OF BULBS	
CURR 1: LAMP SET UP	8 BULBS
CURR 2: LAMP SET UP	8 BULBS

CONTROL SYSTEM CONFIGURATION MENU QUESTIONS	
THE QUESTION	SELECT FROM MENU OPTION
RESET NAMES AND MODULES?	YES
NUMBER OF TRACKS?	1
NUMBER OF XR INPUTS?	1
CONSTANT WARNING DEVICE	GCP
CROSSING CONTROLLER?	SSCC III (A. PLUS)
MAIN / STANDBY	YES
AUXILIARY TRACKS?	NO
AUX TRACK	(SET IF AUX TRACKS = YES)
GATES?	2
EXIT GATES?	0
UAX?	DROPS MD/GCP
BATTERY BANKS?	2
PREEMPTION?	YES
ILOD MODULES?	1
LAMP TYPE?	NORMAL
AUTO INSPECTIONS?	YES
BELL SENSOR?	** 1
BELL SENSOR INPUT 7	** YES
BELL SENSOR INPUT 8	** NO
BELL SENSOR INPUT 9	** NO
BELL SENSOR INPUT 10	** NO
BELL ON?	GATES LOWERING
GATE TIP SENSORS?	YES
GROUND FAULT DETECTORS?	YES
CHANNEL 1	161.475 MHZ
CHANNEL 2	NONE
FULL APPROACH MOVE ALARMS	ACTIVATE
SSCC ATCS ADDRESS	7.RRR.LLL.GGG.07.01

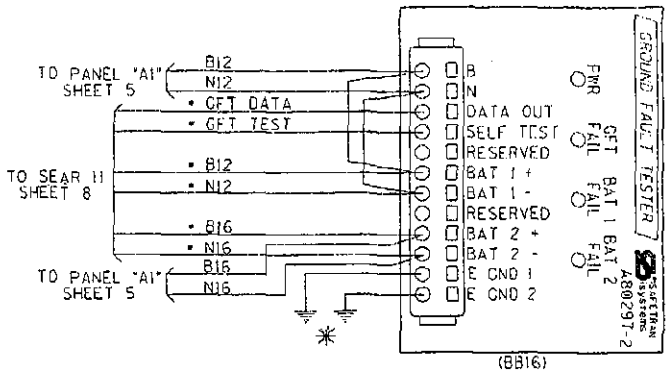

VERIFY THE BATTERY SUPPLY VOLTAGES	
B12 BATTERY VOLTAGE AT INPUT DC1	VOLT 1: .
B16 BATTERY VOLTAGE AT INPUT DC2	VOLT 2: .

NOTES:

ALL WIRING TO BE #16AWG UNLESS NOTED OTHERWISE

* = CABLE PROVIDED WITH SEAR II

** = OPTIONS: IF BELL SENSOR = 0, THEN BELL FIELDS ARE NOT USED.

*** = IF SITE TYPE = NO COMMUNICATION, THEN THESE OPTIONS ARE NOT DISPLAYED

**** = THESE SETTINGS SHOULD BE LEFT AT THE DEFAULT SETTING.

✳ = CONNECT "E GND 1" AND "E GND 2" TO INDEPENDENT GROUND POINTS ON SIDE A AND SIDE B.

SEAR II SET UP CHART
& GROUND FAULT TESTER

DESIGNED BY: WJK 01-06-07	NORFOLK SOUTHERN	
DRAWN BY: SWS 01-06-07	OFFICE OF ASS'T. VICE PRESIDENT COMM. & SIGNAL, ATLANTA, GA.	M.P.: CJ-184.93
CHECKED BY: SEK 01-23-07	SPRINGFIELD, OH FLCS AT SNYDER ST.	
IN SERVICE: - -	DAYTON DISTRICT	FILE No. R-
	CADD or DWG. No. 82111850.09	SHEET No. 9 of 19

REVISION INITIALS

PROPERTY
PENNSYLVANIA R.R.

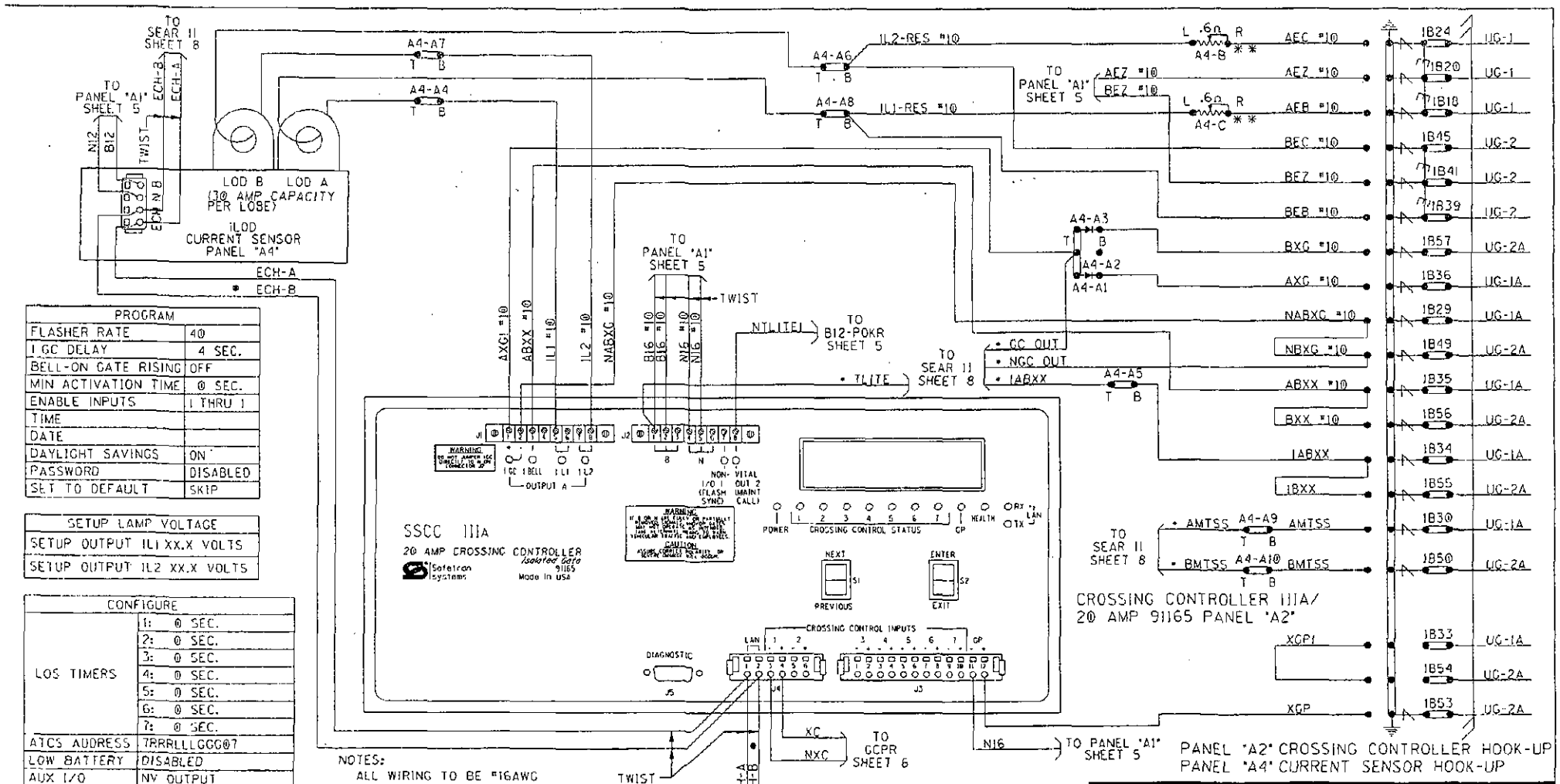

PROGRAM	
FLASHER RATE	40
I GC DELAY	4 SEC.
BELL-ON GATE RISING	OFF
MIN ACTIVATION TIME	0 SEC.
ENABLE INPUTS	1 THRU 1
TIME	
DATE	
DAYLIGHT SAVINGS	ON
PASSWORD	DISABLED
SET TO DEFAULT	SKIP

SETUP LAMP VOLTAGE
SETUP OUTPUT IL1 XX.X VOLTS
SETUP OUTPUT IL2 XX.X VOLTS

CONFIGURE		
LOS TIMERS	1:	0 SEC.
	2:	0 SEC.
	3:	0 SEC.
	4:	0 SEC.
	5:	0 SEC.
	6:	0 SEC.
	7:	0 SEC.
ATCS ADDRESS	7RRRLLLGGG07	
LOW BATTERY	DISABLED	
AUX I/O	NV OUTPUT	

TEST CONFIGURE	
LAMP TEST CANCEL TIMER	5 MIN.
LAMP TEST DELAY TIMER	30 SEC.
LAMP TEST ON TIMER	15 SEC.

NOTES:
ALL WIRING TO BE #16AWG UNLESS NOTED OTHERWISE.

• = CABLE PROVIDED WITH SEAR II

⊢ = DIODE SAFETRAN PN 8A299

* * = RESISTORS TO BE INSTALLED TO LAMPS WITH SHORTEST CABLE RUN

• = ECHELON CONNECTIONS NOT TO EXCEED 53' IN LENGTH AND TOTAL LENGTH NOT TO EXCEED 430' WITH A MAXIMUM OF 8 NODES. RECOMMEND USE BELDEN WIRE CABLE #8461 OR EQUIVALENT.

PANEL "A2" CROSSING CONTROLLER HOOK-UP
PANEL "A4" CURRENT SENSOR HOOK-UP

DESIGNED BY: WJK 01-06-07	NORFOLK SOUTHERN
DRAWN BY: SWS 01-06-07	OFFICE OF ASS'T. VICE PRESIDENT COMM. & SIGNAL, ATLANTA, GA. — M.P.: CJ-184.93
CHECKED BY: SEK 01-23-07	SPRINGFIELD, OH FLGS AT SNYDER ST.
IN SERVICE: - -	DAYTON DISTRICT — FILE No. R-
	CADD or DWG. No. 6211165@.10 — SHEET No. 10 of 19

REVISION INITIALS

PROPERTY
PENNSYLVANIA R.R.

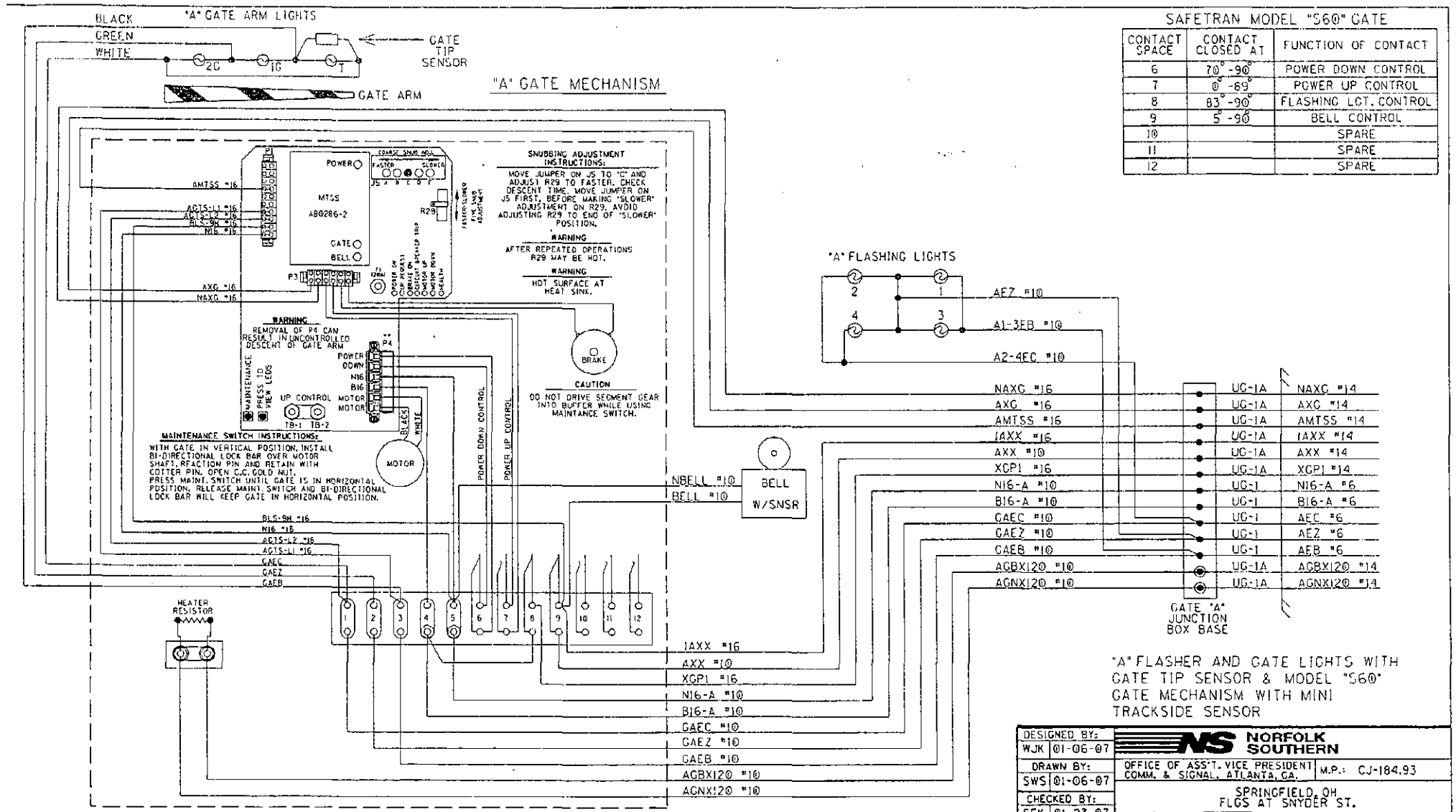

SAFETRAN MODEL "S60" GATE

CONTACT SPACE	CONTACT CLOSED AT	FUNCTION OF CONTACT
6	70° -90°	POWER DOWN CONTROL
7	0° -69°	POWER UP CONTROL
8	83° -90°	FLASHING LGT. CONTROL
9	5° -90°	BELL CONTROL
10		SPARE
11		SPARE
12		SPARE

"A" FLASHER AND GATE LIGHTS WITH GATE TIP SENSOR & MODEL "S60" GATE MECHANISM WITH MINI TRACKSIDE SENSOR

DESIGNED BY: WJK 01-06-07	NORFOLK SOUTHERN		
DRAWN BY: SWS 01-06-07	OFFICE OF ASS'T. VICE PRESIDENT COMM. & SIGNAL, ATLANTA, GA.	M.P.: CJ-184.93	
CHECKED BY: SEK 01-23-07	SPRINGFIELD, OH FLGS AT SNYDER ST.		
IN SERVICE: - -	DAYTON DISTRICT	FILE No. R-	
	CADD or DWG. No. 82111850.11	SHEET No. 11 of 19	

REVISION INITIALS											

PROPERTY
PENNSYLVANIA R.R.

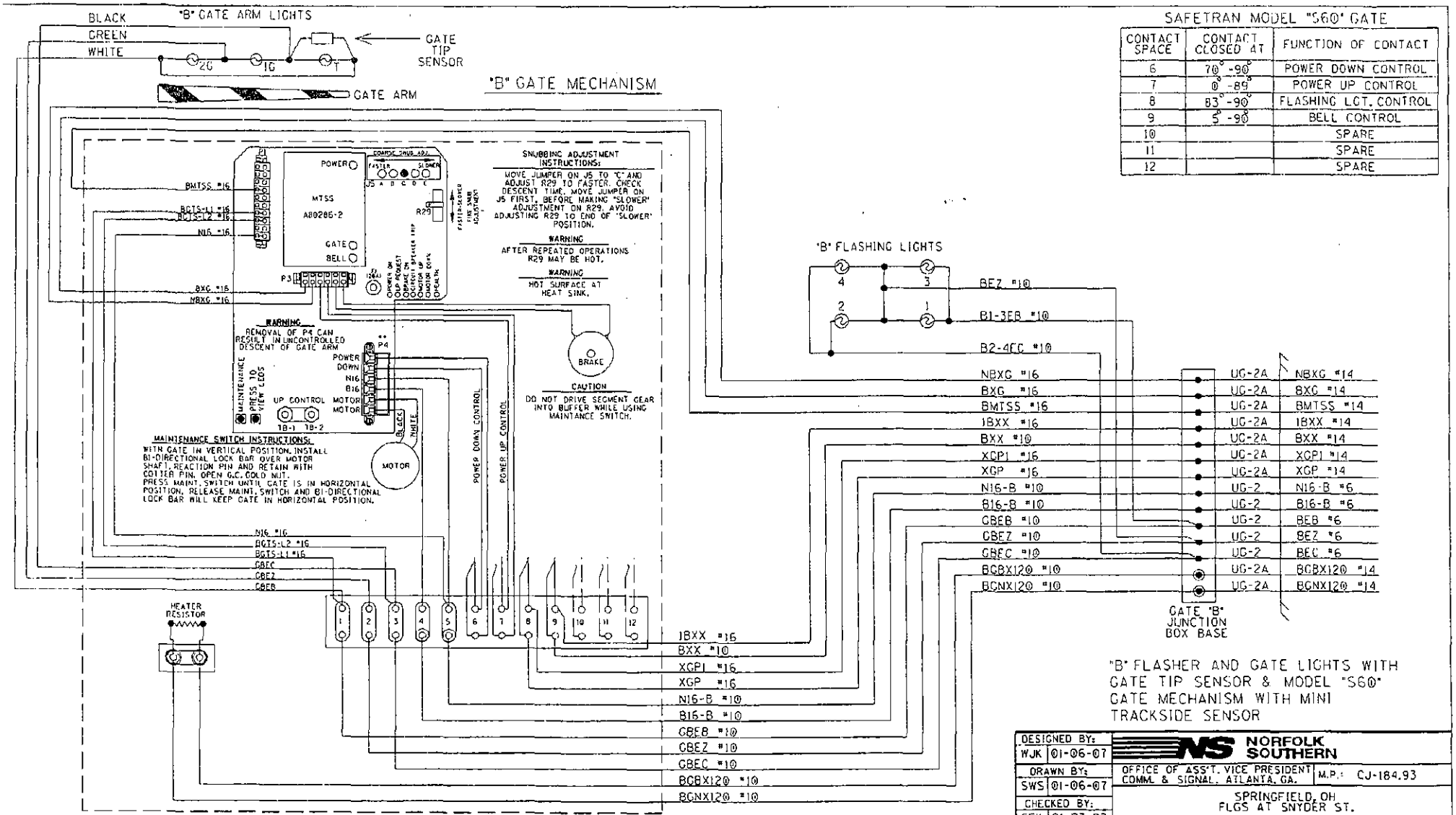

SAFETRAN MODEL "S60" GATE

CONTACT SPACE	CONTACT CLOSED AT	FUNCTION OF CONTACT
6	70°-90°	POWER DOWN CONTROL
7	0°-89°	POWER UP CONTROL
8	83°-90°	FLASHING LGT. CONTROL
9	5°-90°	BELL CONTROL
10		SPARE
11		SPARE
12		SPARE

"B" FLASHER AND GATE LIGHTS WITH GATE TIP SENSOR & MODEL "S60" GATE MECHANISM WITH MINI TRACKSIDE SENSOR

DESIGNED BY: WJK 01-06-07	NORFOLK SOUTHERN		
DRAWN BY: SWS 01-06-07	OFFICE OF ASS'T. VICE PRESIDENT COMM. & SIGNAL, ATLANTA, GA.	M.P.: CJ-184.93	
CHECKED BY: SEK 01-23-07	SPRINGFIELD, OH FLGS AT SNYDER ST.		
IN SERVICE: - -	DAYTON DISTRICT	FILE No. R-	
	CADD or DWG. No. 82111850.12	SHEET No. 12 of 19	

REVISION INITIALS

PROPERTY PENNSYLVANIA R.R.

LEFT TWO ROWS TERMINAL BOARD 1

'1A' '1B'

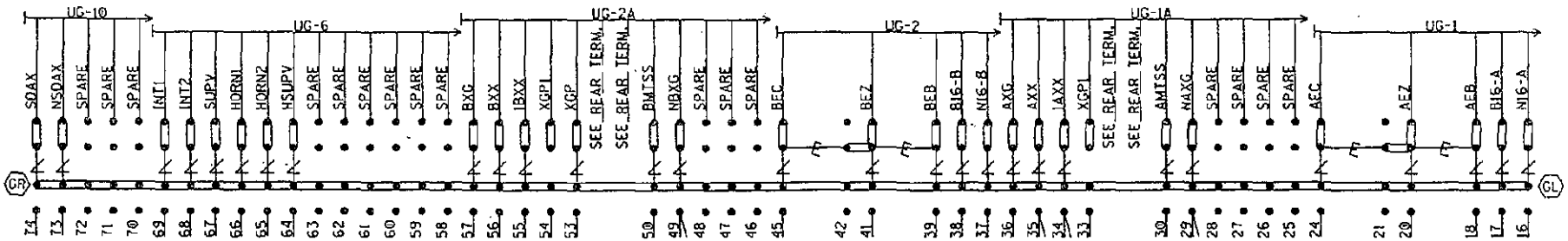

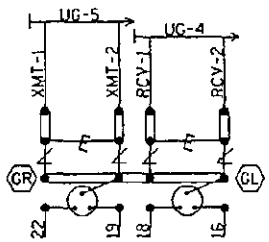

NOTE: INSTALL TEST LINKS ON ALL TRACK WIRES AND ON ALL LOW VOLTAGE UNDERGROUND CABLE TERMINATIONS.

SEE FARADAY SHIELD DETAILS - 1A & 1B FOR HOW THIS PORTION OF THE FARADAY SHIELD IS PREDRILLED. ONLY INSTALL AND USE THE TERMINALS NEEDED.

= Heavy Duty Equalizer (022700-1X)

Clearview = Lightning Arrester (022585-1X)

= LPC-10560-51

GR / GL = TERMINALS GROUNDED TO SHIELD. 4 POST BLOCKS USE EITHER - GR - SERMMI PART NO. 61278 GL - SERMMI PART NO. 61278-1.

BACKBOARD DETAIL - 1A & 1B

DESIGNED BY: WJK 01-06-07	NORFOLK SOUTHERN
DRAWN BY: SWS 01-06-07	OFFICE OF ASS'T. VICE PRESIDENT COMM. & SIGNAL, ATLANTA, GA. — M.P.: CJ-184.93
CHECKED BY: SEK 01-23-07	SPRINGFIELD, OH FLGS AT SNYDER ST.
IN SERVICE: - -	DAYTON DISTRICT — FILE No. R-
	CADD or DWG. No. 82111850.13 — SHEET No. 13 of 19

REVISION INITIALS	SWS 02-05-07								

PROPERTY PENNSYLVANIA R.R.

REAR VIEW OF LEFT TWO ROWS TERMINAL BOARD 1
"1B" "1A"

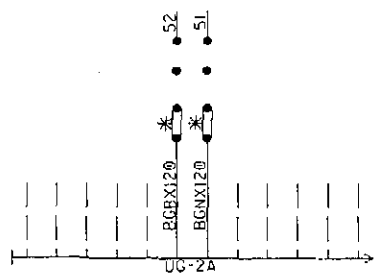

(SEE PREVIOUS SHEET FOR OTHER WIRES IN CABLE)

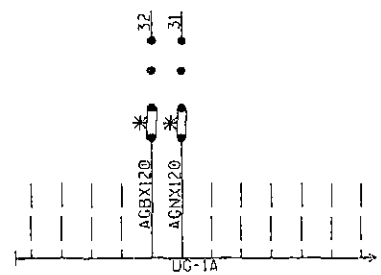

(SEE PREVIOUS SHEET FOR OTHER WIRES IN CABLE)

NOTE: ALL 120VAC AND ABOVE WILL BE WIRED TO THE REAR OF FARADAY BACKBOARD. INSULATED NUTS MUST BE USED ON ALL TERMINALS.

✳ = CLOSED DURING WINTER MONTHS

REAR OF FARADAY BACKBOARD
REAR BACKBOARD DETAIL - 1A & 1B

DESIGNED BY: WJK 01-06-07	NORFOLK SOUTHERN		
DRAWN BY: SWS 01-06-07	OFFICE OF ASS'T. VICE PRESIDENT COMM. & SIGNAL, ATLANTA, GA.	M.P.: CJ-184.93	
CHECKED BY: SEK 01-23-07	SPRINGFIELD, OH FLGS AT SNYDER ST.		
IN SERVICE: - -	DAYTON DISTRICT	FILE No. R-	
	CADD or DWG. No. 82111850.14	SHEET No. 14 of 19	

REVISION INITIALS

PROPERTY
PENNSYLVANIA R.R.

NOTE: IF THE FARADAY SHIELD WOULD EVER NEED TO BE DRILLED IN THE FIELD, PROPER PRECAUTIONS MUST BE TAKEN TO INSURE METAL SHAVINGS DO NOT GET INTO EXISTING TERMINALS/WIRES.

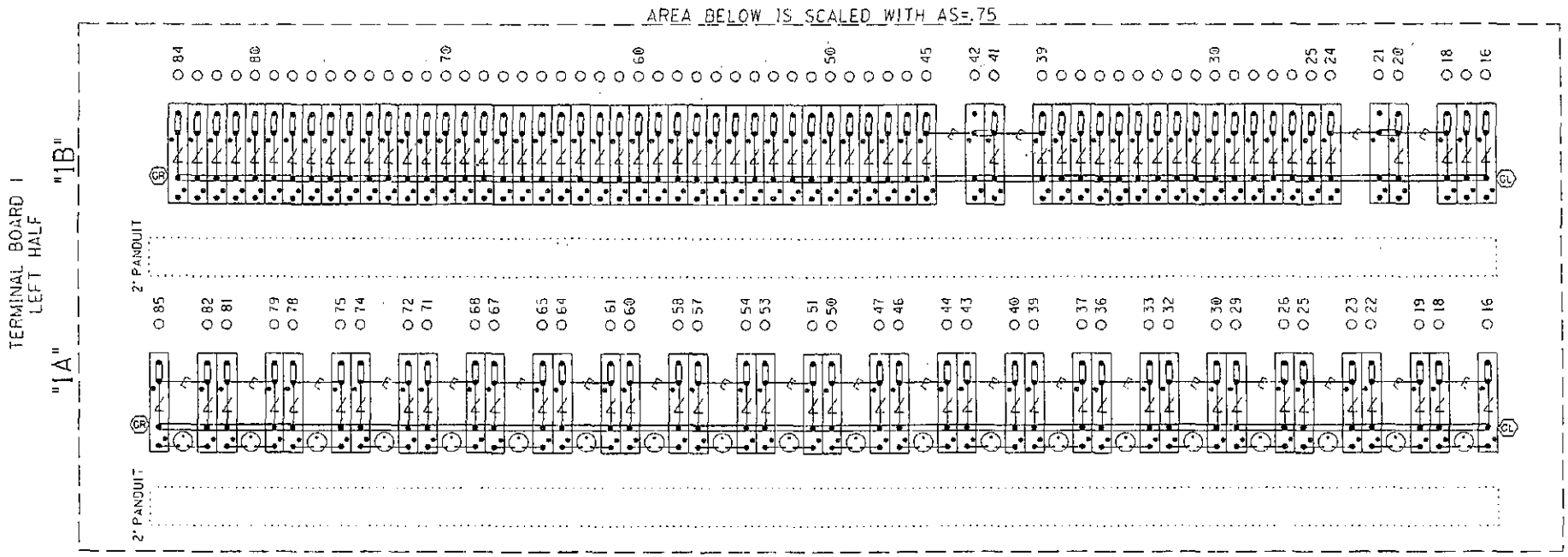

= Heavy Duty Equalizer (022700-1X)

Clearview = Lightning Arrester (022585-1X)

= LPC-10560-51

TERMINAL BOARD 1
LEFT TWO ROWS
FARADAY SHIELD DETAIL - 1A & 1B

= INDICATES PLACEMENT OF PANDUIT

THIS SHEET IS FOR REFERENCE ONLY, TO REFLECT HOW THE FARADAY SHIELD IS PREDRILLED. ONLY INSTALL AND USE THE TERMINALS NEEDED.

GR / GL = TERMINALS GROUNDED TO SHIELD. 4 POST BLOCKS USE EITHER - GR - SERMMI PART NO. 61278 GL - SERMMI PART NO. 61278-1.

DESIGNED BY: WJK 01-06-07	NORFOLK SOUTHERN		
DRAWN BY: SWS 01-06-07	OFFICE OF ASS'T. VICE PRESIDENT COMM. & SIGNAL, ATLANTA, GA.	M.P.: CJ-184.93	
CHECKED BY: SEK 01-23-07	SPRINGFIELD, OH FLGS AT SNYDER ST.		
IN SERVICE: - -	DAYTON DISTRICT	FILE No. R-	
	CADD or OWG. No. 82111850.15	SHEET No. 15 of 19	

REVISION INITIALS										

PROPERTY PENNSYLVANIA R.R.

NOTE: IF THE FARADAY SHIELD WOULD EVER NEED TO BE DRILLED IN THE FIELD, PROPER PRECAUTIONS MUST BE TAKEN TO INSURE METAL SHAVINGS DO NOT GET INTO EXISTING TERMINALS/WIRES.

AREA BELOW IS SCALED WITH AS=.75

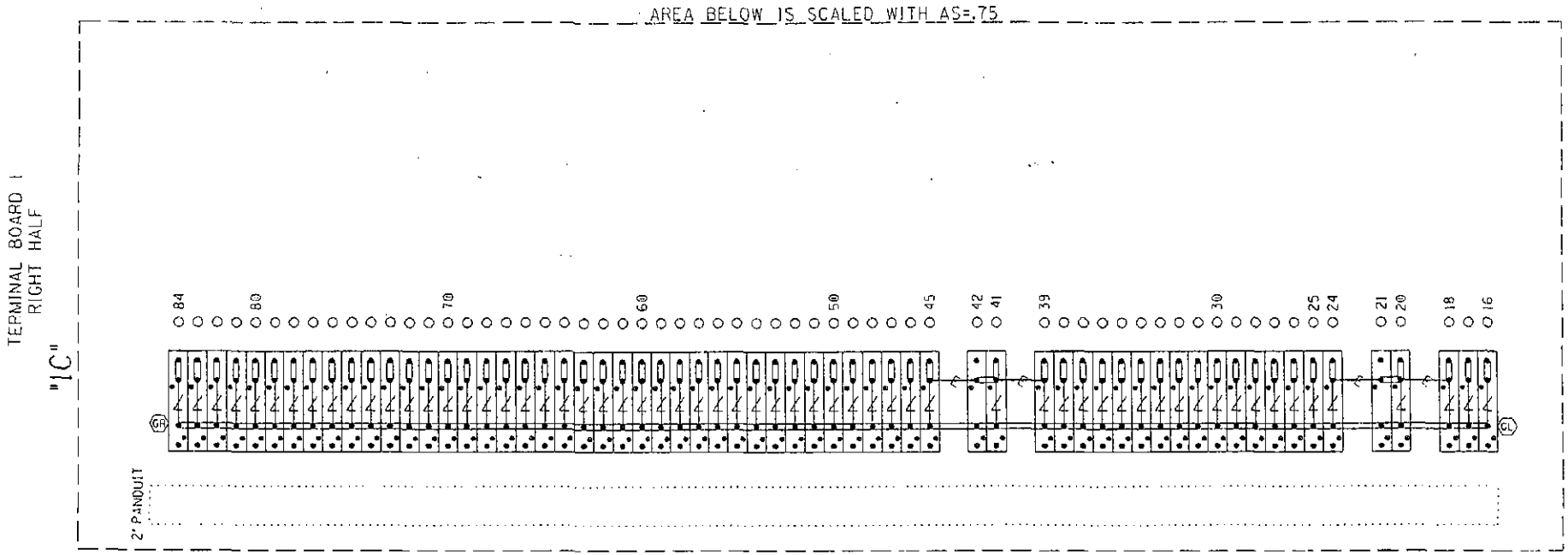

= Heavy Duty Equalizer (022700-1X)

Clearview = Lightning Arrester (022585-1X)

= LPC-10560-51

TERMINAL BOARD 1
RIGHT ROW
FARADAY SHIELD DETAIL - 1C

= INDICATES PLACEMENT OF PANDUIT

THIS SHEET IS FOR REFERENCE ONLY. TO REFLECT HOW THE FARADAY SHIELD IS PREDRILLED. ONLY INSTALL AND USE THE TERMINALS NEEDED.

GR / GL = TERMINALS GROUNDED TO SHIELD. 4 POST BLOCKS USE EITHER - GR - SERMMI PART NO. 61278 GL - SERMMI PART NO. 61278-1.

DESIGNED BY: WJK 01-06-07	NORFOLK SOUTHERN		
DRAWN BY: SWS 01-06-07	OFFICE OF ASS'T. VICE PRESIDENT COMM. & SIGNAL, ATLANTA, GA.	M.P.: CJ-184.93	
CHECKED BY: SEK 01-23-07	SPRINGFIELD, OH FLGS AT SNYDER ST.		
IN SERVICE: - -	DAYTON DISTRICT	FILE No. R-	
	CADD or DWG. No. 82111850.16	SHEET No. 16 of 19	

REVISION INITIALS										

PROPERTY
PENNSYLVANIA R.R.

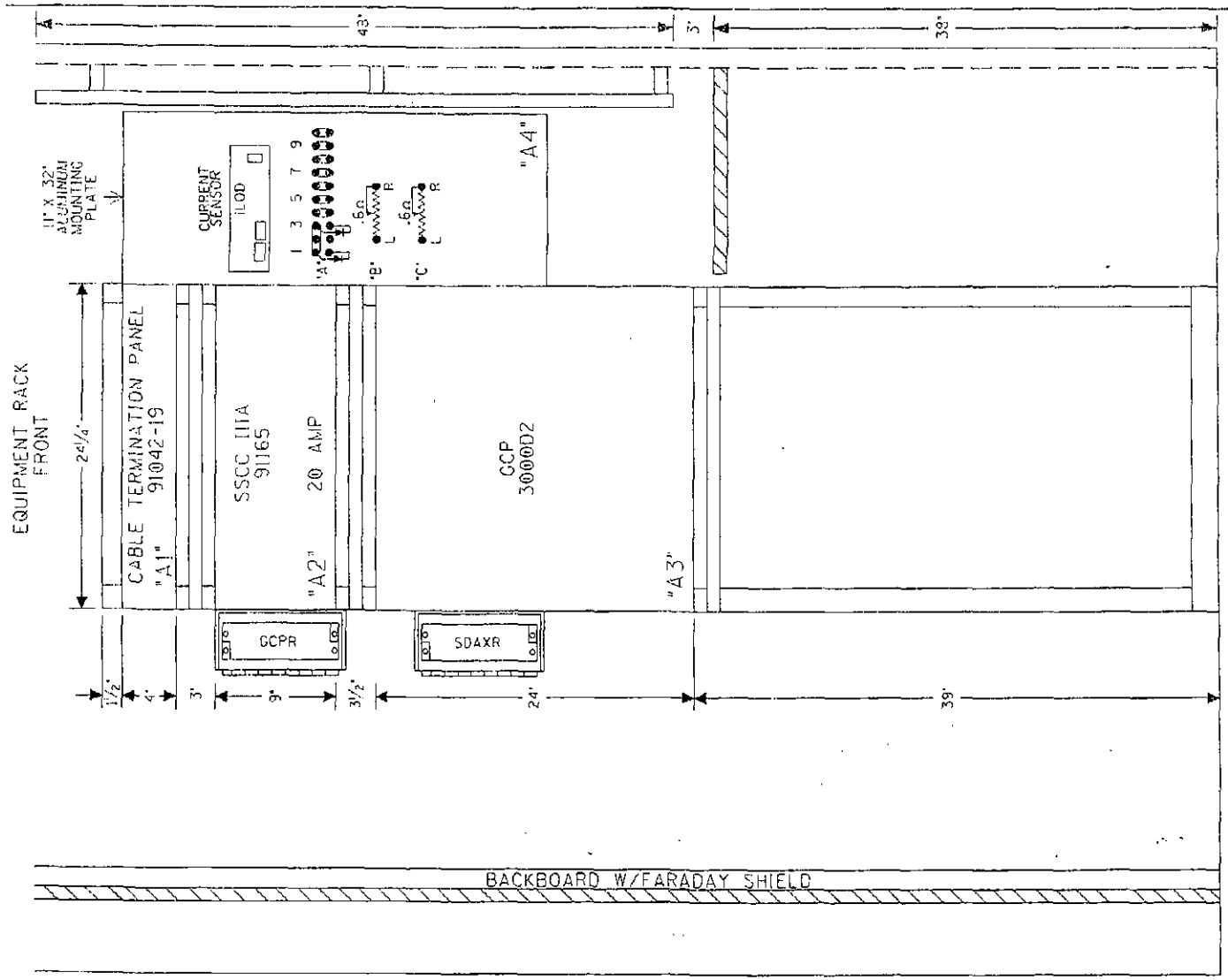

SAFETRAN, ALSTOM(GRS) RELAY CROSS REFERENCE LIST

SAFETRAN	ALSTOM(GRS)
400003	A62-308

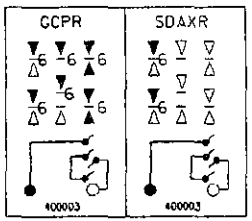

SIDE "C"

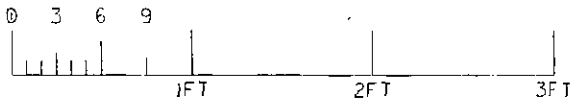

RACK PLACEMENT
6' X 6' HOUSE - SIDE "C"

DESIGNED BY: WJK 01-06-07	NORFOLK SOUTHERN	
DRAWN BY: SWS 01-06-07	OFFICE OF ASS'T. VICE PRESIDENT COMM. & SIGNAL, ATLANTA, GA.	M.P.: CJ-184.93
CHECKED BY: SEK 01-23-07	SPRINGFIELD, OH FLGS AT SNYDER ST.	
IN SERVICE: - -	DAYTON DISTRICT	FILE No. R-
	CADD or DWG. No. 82111850.17	SHEET No. 17 of 19

REVISION INITIALS											

PROPERTY
PENNSYLVANIA R.R.

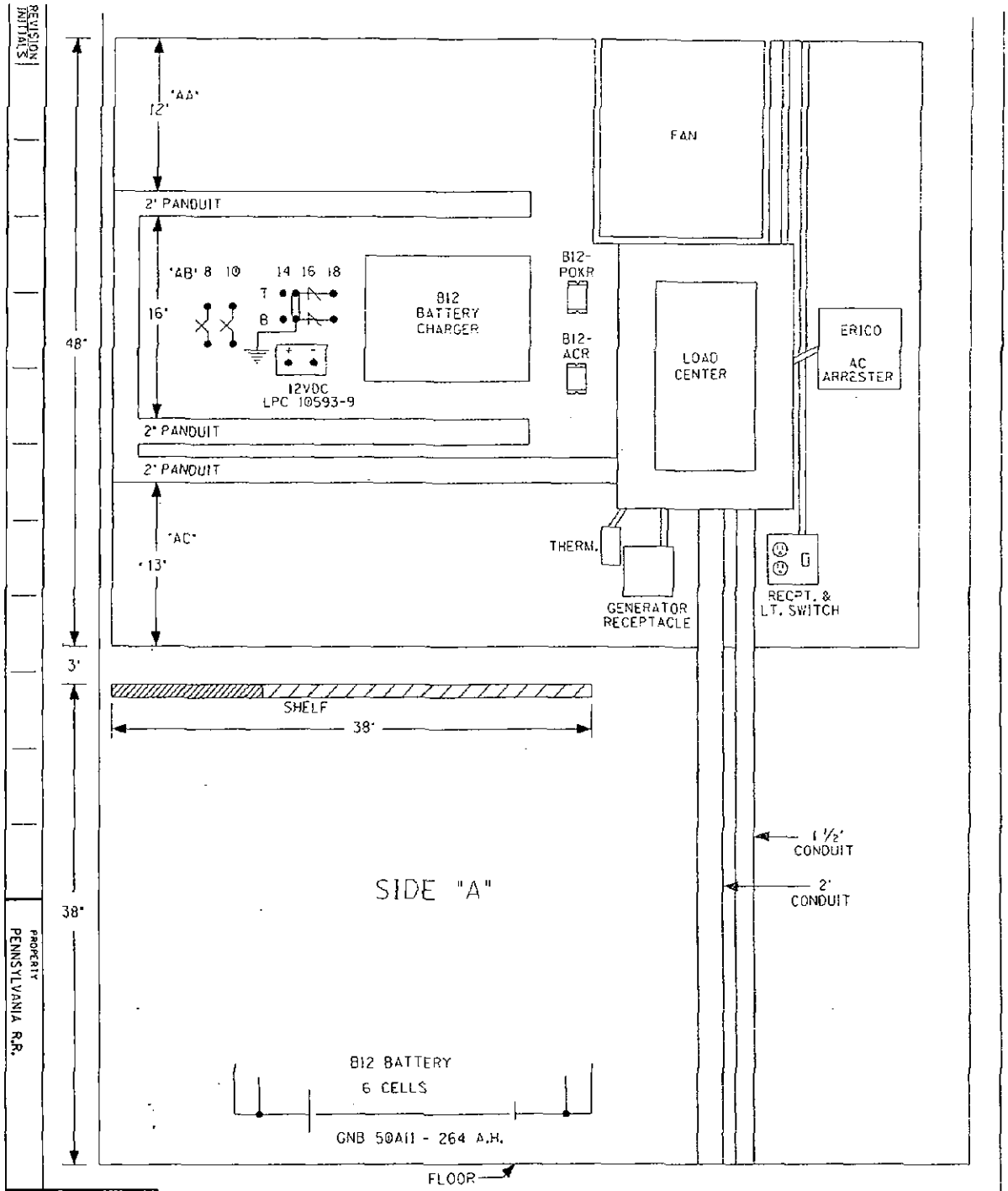

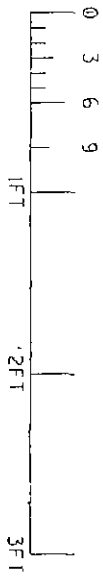

6' X 6' HOUSE - SIDE "A"

REVISION INITIALS	
PROPERTY	PENNSYLVANIA R.R.
DESIGNED BY:	WJK 01-06-07
DRAWN BY:	SWS 01-06-07
CHECKED BY:	SEK 01-23-07
IN SERVICE:	- -
NORFOLK SOUTHERN	
OFFICE OF ASS'T. VICE PRESIDENT COMM. & SIGNAL, ATLANTA, GA.	
M.P.:	CJ-184.93
SPRINGFIELD, OH. FLGS AT SNYDER ST.	
DAYTON DISTRICT	
CADD or DWG. No.	82111850.18
FILE No.	R-
SHEET No.	18 of 19

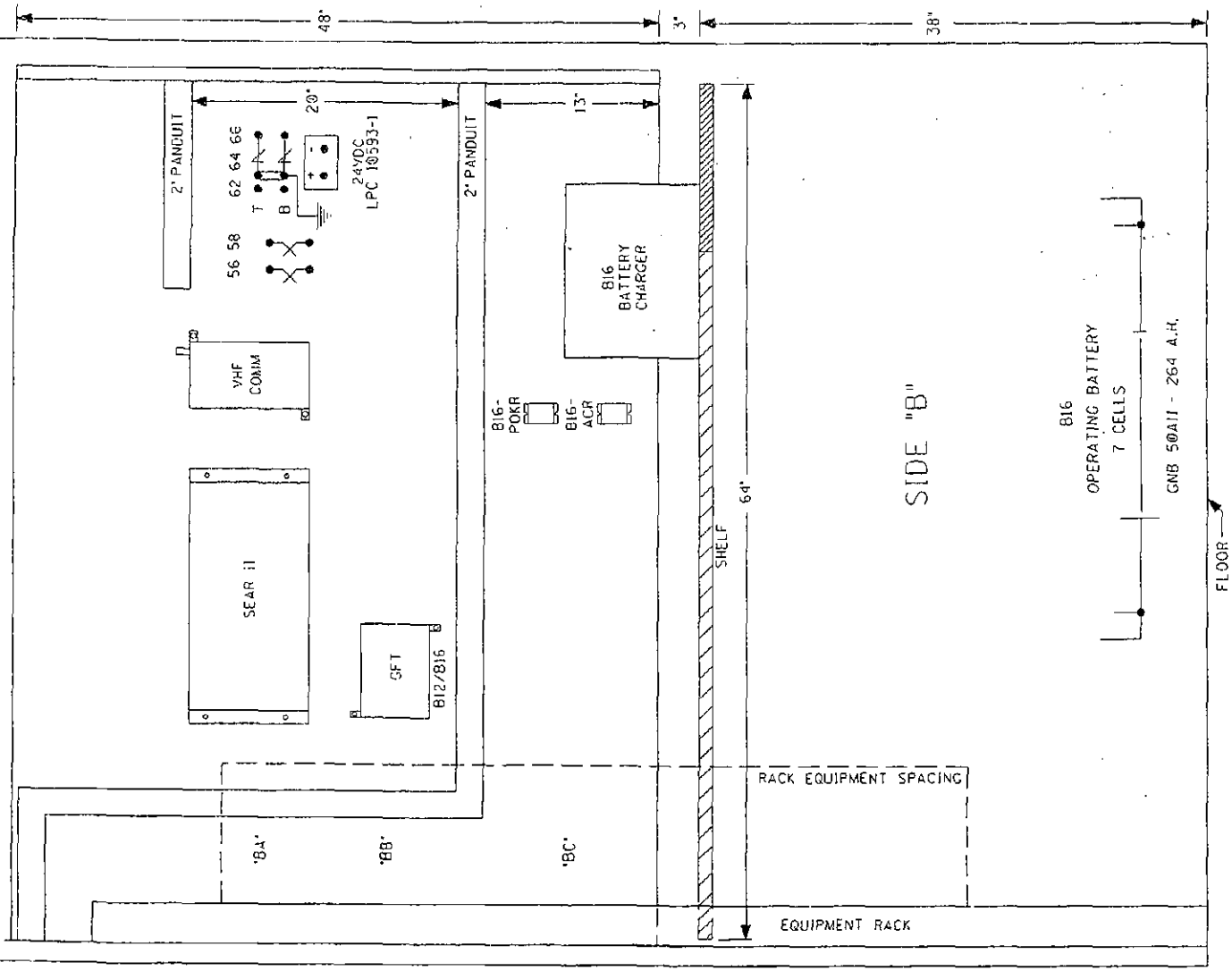

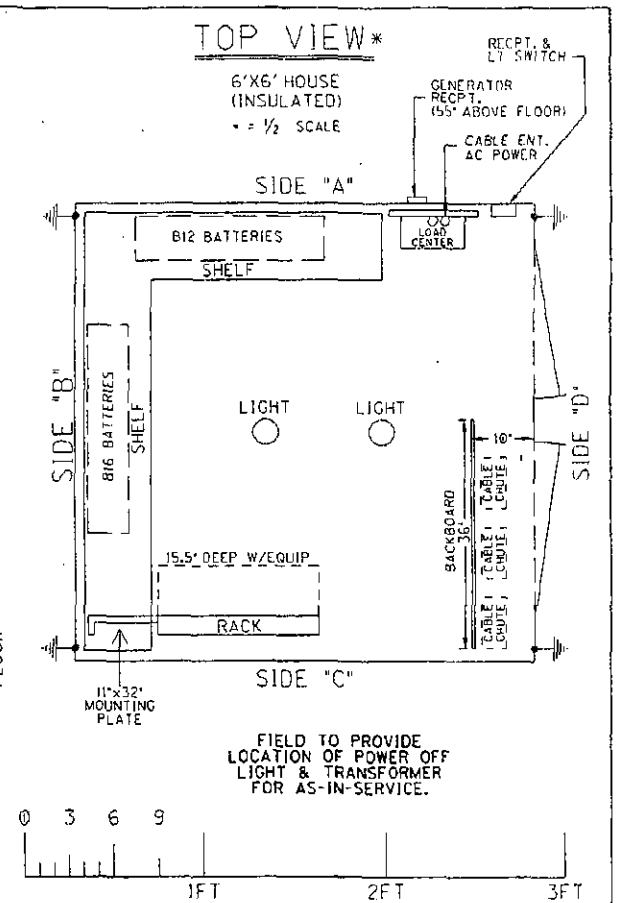

6' X 6' HOUSE (SIDE "B" & TOP VIEW)

DESIGNED BY: WJK 01-06-07	NORFOLK SOUTHERN	
DRAWN BY: SWS 01-06-07	OFFICE OF ASS'T. VICE PRESIDENT COMM. & SIGNAL, ATLANTA, GA.	M.P.: CJ-184.93
CHECKED BY: SEK 01-23-07	SPRINGFIELD, OH FLGS AT SNYDER ST.	
IN SERVICE: - -	DAYTON DISTRICT	FILE No. R-
	CADD or DWG. No. 82111850.19	SHEET No. 19 of 19

REVISION INITIALS											

PROPERTY
PENNSYLVANIA R.R.