83

Norfolk Southern Corporation
Communications and Signal Department
1200 Peachtree Street, N.E., Box 123
Atlanta, Georgia 30309

RECEIVED-DOCKETING DIV
2006 DEC 21 AM 11:41
PUCO

B. L. Sykes
Chief Engineer
C&S Engineering
404/529-2105

December 12, 2006
061-10.0800

Ms. Bonnie J. Johrendt
Grade Crossing Planner
Public Utilities Commission of Ohio
180 East Broad St., 14th Floor
Columbus, OH, 43215-3793

RE: In the Matter of the Implementation of the 2006 Federal Crossing Protection Program, Case No. 06-1152-RR-FED

Dear Ms. Johrendt:

Per PUCO order dated October 4, 2006, regarding the above case for the installation of automatic grade crossing warning devices at Holland—Sylvania Road in Toledo, Lucas County, Ohio, DOT: 509 457F, Milepost CD-295.85.

Installation of this project shall be completed within the time period as specified in the state's order. Although we cannot give you an exact date of installation at this time we can provide our average installation time, which is 9.1 months after authorization from the state. Since this project is authorized, we will order material and schedule for installation once we have received approvals from ODOT's district office.

An extra copy of this letter is included with the enclosures. Please date stamp this extra copy and forward to Mr. R. S. Noe, Assistant General Attorney, Norfolk Southern Corporation, Three Commercial Place, Norfolk, Virginia, 23510.

Upon receipt of this material, please initial, date and confirm via fax to 404-527-2901.

Sincerely,

B L Sykes
B. L. Sykes

Enclosure(s)

BLS/rhr/cp/rjs

Cc: Mr. R. S. Noe, NS Corporation, Norfolk, VA
Ms. Susan Kirkland, ORDC (w/plans, estimate and material list)
Docketing Division (w/plans, estimate and material list)
Mr. H. W. Maness, NS Corporation, Roanoke, VA (w/estimate)

This is to certify that the images appearing are an accurate and complete reproduction of a case file document delivered in the regular course of business
Technician _____ Date Processed 12-21-06

RECEIVED
PUBLIC UTILITIES
COMMISSION OF OHIO
2006 DEC 18 PM 1:33
RAIL DIVISION

11-Dec-06

Detailed Estimate for Grade Crossing Warning Devices

City/State: TOLEDO, OH
MilePost: CD-295.85
State Proj. No.:
S&E Proj. No.: 10.0014
Man Days: 168

Road: HOLLAND-SYLVANIA RD.
DOT/AAR: 509457F
County: LUCAS
AFE: F10025
File Number: 061-10.0800

*****Purchases - Others*****		
Meals and Lodging:	$15,807.05	
Rental of Equipment:	$34,557.60	
(2 Trucks, 1 Backhoe w/ Trailer and 1 Pipe-Pusher for 42 Days)		
Construction Supervision Vehicle:	$2,764.61	
Purchases - Other Total:		$53,129.26
*****Material And Additives*****		
Material Cost:	$147,490.00	
Sales and Use Tax:	$0.00	
Material Handling Freight:	$7,374.52	
Material Total:		$154,864.52
*****Labor And Additives*****		
Labor Cost:	$40,656.00	
(4 man crew at $968.00 a day for: 42 days)		
Payroll Tax & Overheads:	$40,107.14	
Preliminary Engineering:	$16,556.89	
Construction Supervision:	$11,477.19	
Labor Total:		$108,797.22
	Project Cost:	$316,791.00
	Scrap / Salvage Credit:	$0.00
	Project Total:	**$316,791.00**

Estimated on: 11-Dec-06

Estimated by: ndr3j

Estimate valid for 1 year from date of estimate

Norfolk Southern Railway

Highway Crossing Signalization Program - Material List

Do not substitute items without permission from S & E Engineering

City:	TOLEDO
Road:	HOLLAND-SYLVANIA RD.
Mile Post:	CD-295.85
Drawing Number:	36002958
State ProjectNumber:	
County:	LUCAS
A A R Number:	509457F
Project Number:	10.0014
File Number:	061-10.0800
A F E Number:	F10025
Store Number:	
Supervisor:	L.J. PAWLOWSKI
Tax Code:	3500

Vendor to supply the following copies after pricing:

1 Set - Material Management with original Invoice
2 Sets - with plans shipped in car with material
1 Set - S&EGen. Supt. Construction w/copy of invoice

Location: TOLEDO OH S&E Proj. No.: 10.0014 AFE No.: F10025 Drawing No.: 36002958

Store No.: P.O.Number: Date Required: Date Shipped: Vendor: Interrail Engineering, INC

Qty.	Class-Item-CD	UI	Price per Item	Total Price	Item Description	Quantity Shipped	Quantity Installed Date Quan.	Date Quan.	Date Quan.	Quantity Returned (Credit)	Special Instructions
3	670-360693-4	EA	$5.04	$15.12	AAR/DOT NUMBER PLATE/DECAL, ORDER 3 PER PROJECT. 60 DAY LEAD TIME. SUPPLIED BY S'TRAN.						
2	165-006505-4	EA	$1,051.54	$2,103.08	AC SERVICE, COMPLETE LESS METER BASE, ASSEMBLED ON 30' POLE						
24	670-119241-4	EA	$32.80	$787.20	ARRESTOR, LIGHTNING HEAVY DUTY CLEAR VIEW SAFETRAN 022585-1X						
19	105-871901-4	EA	$161.57	$3,069.83	BATTERY,GNB 265AH MODEL 50A11 SINGLE CELL 2.25 VOLTS						
2	670-980689-4	EA	$71.71	$143.42	BRACKET HIGH WIND, (RIGID 3'), WIG- 191036, WALRUS TUSK TYPE						
2	670-561375-4	EA	$1,197.90	$2,395.80	BRACKET, GATE SAVER, NEG385102GS, SPRING LOADED SWING AWAY ADAPTER FOR FIBERGLASS/ALUMINUM GATES, USE WITH GATE 28' AND LESS						
2	670-356949-4	EA	$97.00	$194.00	CABLE, 10' GENERATOR HOOK UP, SERRMI P/N 40524. FEMALE CONNECTOR						
7000	465-292862-4	LF	$1.04	$7,280.00	CABLE, U-2-6 TWISTED, S-23 OKONITE 113-12-3933 SOLID TINNED CONDUCTOR						
4000	465-292945-4	LF	$1.35	$5,400.00	CABLE, U-5-14, S-54 OKONITE 206-14-6885						
400	465-292929-4	LF	$3.05	$1,220.00	CABLE, U.G. 5 COND. NO. 6 AWG SOLID COPPER CABLE TO MEET NS CORP. SPEC. FOR SIGNAL						
400	465-939422-4	LF	$2.55	$1,020.00	CABLE, UG 12 CONDUCTOR NO 14 AWG SOLID EACH CONDUCTOR WITH 5/64 IN INSULATION 10 MIL						
600	465-791835-4	FT	$2.22	$1,332.00	CABLE, UG AC ENTRANCE 3C#6-7X OKONITE FMPF-L 094-078 TR W/G 1 X 8 7X W010 BRZ TAPE 600V PRODUCT CODE 206-11-6070						
2	670-128745-4	EA	$180.02	$360.04	CHOKE, BATTERY SAFETRAN NO 8A065A FOR GRADE CROSSING PREDICTOR						
160	165-544477-4	FT	$2.55	$408.00	CONDUIT, 4"x10' PVC, SCHEDULE 80 BELL CONNECTOR AT ONE END, 1/2 PT. GLUE IN KIT 670-123298-4						
16	670-090450-4	EA	$50.38	$806.08	CONNECTOR,WELDED FAR RAIL HARMON A1000-2W						
16	670-486646-4	EA	$41.62	$665.92	CONNECTOR,WELDED NEAR RAIL HARMON A1000-1W						
2	670-793404-4	EA	$838.37	$1,676.74	COUNTERWEIGHT PKAGE, 17-24'GATE S'TRAN S- MECH ONLY, STAINLESS, TO INCLUDE HUB, SUPPORT ARMS						

APPROVED BY STATE	APPROVED BY RAILROAD	CAR NUMBER	SEAL NUMBER

Location: TOLEDO OH S&E Proj. No.: 10.0014 AFE No.: F10025 Drawing No.: 36002958

Store No.: P.O.Number: Date Required: Date Shipped: Vendor: Interrail Engineering, INC

Qty.	Class-Item-CD	UI	Price per Item	Total Price	Item Description	Quantity Shipped	Quantity Installed Date Quan.	Date Quan.	Date Quan.	Quantity Returned (Credit)	Special Instructions
4	670-760012-4	EA	$40.02	$160.08	COVER, FOR 1 WAY FLASHING LIGHT ASSY. 18 OZ. BLACK VINYL COATED NYLON. ====TO COVER 2 LAMPS====						
1	670-986650-4	EA	$375.69	$375.69	DISPOSAL, CONSTRUCTION DEBRIS AND CLEANING X'ING EQUIPMENT CONTAINER						
8	670-228165-4	EA	$10.73	$85.84	EQUALIZER, SAFETRAN 022700-1X LESS BASE, MODERN NO. 700-1 SHUNT ARRESTER TRACK CIRCUITS CR 02-197950						
1	670-000004-4	EA	$700.00	$700.00	FCC LICENSE FOR MONITOR/RADIO						
8	670-000003-4	EA	$255.85	$2,046.80	FILL/STONE #57, QUANITY IS BASED ON TRUCK LOAD PLUS DELIVERY COST						
2	670-015231-4	EA	$423.50	$847.00	FOUNDATION,DIXIE,S-2 GATE 5'6" ASSEMBLED						
2	670-257031-4	EA	$297.88	$595.76	GATE, ARM FIBERGLASS-ALUMINUM 17-24 FT., INCLUDES GATE GUARD FOR GATE LIGHT CABLE, NEG P/N 8002-244NFS/CG						
2	670-930665-4	EA	$43.57	$87.14	INDUCTOR, SIMULATED TRACK SAFETRAN 8V617-1400						
2	670-477991-4	EA	$317.90	$635.80	KIT, GROUNDING ASSY FOR AL I/S INCLUDES 8 GRD RDS,200'#4WIRE,12 4 WIRE ONE-SHOTS. ERICO SBK206						
3	670-123298-4	EA	$256.93	$770.79	KIT, HARDWARE SUPPLIES REQUIRED X'ING P'CKAGES. WEB CONNECTORS FOR SHUNT(8EA) TAPE, AMPS,P'GUM PAINT,SLEEVES,TAGS,GLUE, 100 EA WHITE TAGS,)NE CAN BLUE MARKING PAINT ETC...						
4	670-835845-4	EA	$14.51	$58.04	KIT, SPLICING SCOTCHAST #72-N1 FOR SPLICING 1C #9, 2C #6 UG OR AERIAL						
4	670-835853-4	EA	$32.93	$131.72	KIT, SPLICING SCOTCHAST #72-N2 FOR SPLICING 2C #9, 2C #14, 7C #14 UG OR AERIAL						
2	670-764166-4	EA	$907.65	$1,815.30	LAMP ASSY, 5" MAST MTG. 2W IND. 20" BKGRD, FLX-12 W/BULB S'TRAN #042003-487XNS						
6	165-643547-4	EA	$4.30	$25.80	LAMP, 18 WATT 10 VOLT S-11 SC BAY 18S11/1SC CLEAR RWY SIGNAL UJ-71463 GE						
24	670-440826-4	EA	$1.01	$24.24	LINK, SAFETRAN 024620-1X INSL TESTING COMP 1 IN CENTER SIGNAL CIRCUITS CR 02-286662						
6	255-590880-4	EA	$16.12	$96.72	LOCK, AMERICAN LOCK MODEL H-10KA KEYED ALIKE TO PRIVATE KEYWAY D456 AND STAMPED "NS SIG"						

APPROVED BY STATE	APPROVED BY RAILROAD	CAR NUMBER	SEAL NUMBER

Location: TOLEDO OH S&E Proj. No.: 10.0014 AFE No.: F10025 Drawing No.: 36002958

Store No.: P.O.Number: Date Required: Date Shipped: Vendor: Interrail Engineering, INC

Qty.	Class-Item-CD	UI	Price per Item	Total Price	Item Description	Quantity Shipped	Quantity Installed Date Quan.	Date Quan.	Date Quan.	Quantity Returned (Credit)	Special Instructions
2	670-637778-4	EA	$1,031.41	$2,062.82	MAST, 5" ALUMINUM 13'10" WITH DOUBLE JCT. BOX BASE. S'TRAN P# 070519-11AX.						
2	670-850933-4	EA	$3,352.65	$6,705.30	MECHANISM, GATE MODEL S-60, WITH DEFROSTER AND MINI TRACKSIDE SENSOR S'TRAN # 0740007-X002B3						
2	000-000000-4	EA	$5,000.00	$10,000.00	MIS. UNDERGROUND BORING						
5	670-000001-4	EA	$316.23	$1,581.15	MISC. MATERIAL						
4	670-001347-4	EA	$63.27	$253.08	PACKAGE, HARDWARE SIGN 5 IN. MOUNTING, SERRMI A1250-5, HARMON @200965-000, OR						
2	255-646807-4	EA	$10.38	$20.76	PADLOCK, SAFETRAN PART NO. 030399-29X SCREW TYPE FOR CIR CONTROLLER AND BTY. BOX						
1	670-514605-4	EA	$8.45	$8.45	PINNACLE, W-C SECT 1-11, 4"& 5" REF K1 110-8 OR SAFETRAN NO. @035045-503X						
4	670-555609-4	EA	$45.12	$180.48	PLUGBOARD, TYPE B-1 GRS A62-506 OR HARMON @7062-506 OR						
1	670-973480-4	EA	$7,665.27	$7,665.27	PREDICTOR, DUAL FREQ. 3000 2 TRACK, SAFETRAN #80200-102-0 NO ISLAND, W/PROCESSOR 80214						
8	165-103293-4	EA	$62.43	$499.44	PROTECTOR, LIGHTNING & SURGE LPC 10560-51, 3 ELECTRODE WITH SPADE TERMINAL						
2	165-902002-4	EA	$308.00	$616.00	PROTECTOR, SURGE 120/240VAC, ERICO P/N EPD120/240TDFL						
18	465-002899-4	EA	$22.06	$397.08	REEL, CABLE DISPOSABLE FOR CROSSING SIGNAL PACKAGES						
2	670-742096-4	EA	$41.80	$83.60	RELAY INTERFACE PROBE, ULTRATECH PN 16031-00						
4	670-707995-4	EA	$313.67	$1,254.68	RELAY, TYPE B1, NEV LINE, 900 OHMS,.008 AMPERES GRS A62-308 OR SAFETRAN @400003						
4	435-805560-4	EA	$6.25	$25.00	SAND, 25LB BAG FOR CABLE ENTRANCE INTO THE SHELTER						
1	670-816502-4	EA	$4,903.75	$4,903.75	SEARII AUTOMATED INSPECTOR SYSTEM KIT, w/ 1-iLOD,1-eBELL, 2-GTS, WITHOUT MTSS, 1-GFT,1-VHFC, 2- RECORDER INTERFACE MODULE, 1-ECHELON CONNECTOR						
2	670-281280-4	EA	$7,006.00	$14,012.00	SHELTER BARE 6X6, ALUMN, FARADAY, W/CABLE CHUTES BEHIND TERMINAL BOARD, W/GEN. CONN. W/ADJUSTABLE PIERS, ,SAFTETRAN P/N 058400-66-78A						

APPROVED BY STATE	APPROVED BY RAILROAD	CAR NUMBER	SEAL NUMBER

Location: TOLEDO OH S&E Proj. No.: 10.0014 AFE No.: F10025 Drawing No.: 36002958

Store No.: P.O.Number: Date Required: Date Shipped: Vendor: Interrail Engineering, INC

Qty.	Class-Item-CD	UI	Price per Item	Total Price	Item Description	Quantity Shipped	Quantity Installed Date Quan.	Date Quan.	Date Quan.	Quantity Returned (Credit)	Special Instructions
8	670-586967-4	EA	$37.68	$301.44	SHUNT COVER W/LAG SCREWS, 19"X19", SERRMI #40271, ORDER 1 PER SHUNT						
4	670-688850-4	EA	$370.27	$1,481.08	SHUNT, MULTI-FREQ. #62775-3497 SAFETRAN NARROW BAND						
4	670-645460-4	EA	$596.03	$2,384.12	SHUNT, MULTI-FREQ. #62775-8621 SAFETRAN NARROW BAND						
2	670-393331-4	EA	$37.43	$74.86	SIGN CROSSING MALFUNCTION ASSEMBLY FOR 4" AND 5" MAST, SAFETRAN #T17215						
2	670-806648-4	EA	$56.42	$112.84	SIGN, X-BUCK, LESS HARDWARE, SAFETRAN 035200-X CR 02-490546						
2	670-353390-4	EA	$43.04	$86.08	SIGN, "2 TRACKS" LESS HARDWARE SAFETRAN 035207-2X						
4	670-330382-4	RL	$15.68	$62.72	TAPE, THOR 3" DURATEC, ORANGE 1000' LENGTHS. "WARNING STOP DIGGING"						
24	670-478560-4	EA	$19.47	$467.28	TERMINAL BLOCK, ERICO 4 POST P/N B2700A2C1WH W/HARDWARE LESS LIGHTNING ARRESTOR						
4	610-065626-4	EA	$17.55	$70.20	ULTRA-TECH 15206-01 CONNECTIVITY BLOCK FOR GRS B1 RELAY						
10	670-007238-4	EA	$129.46	$1,294.60	UNIT, THE INSTALLATION AND WIRING OF A DEVICE WHICH REQUIRE A MINIMUM OF FOUR WIRE CONNECT-						
200	465-999111-4	LF	$0.29	$58.00	WIRE, NO.10, 1 CONDUCTOR, CASE, FLEXIBLE 37 STRAND, 3/64 IN. INSULATION-ORDER EXT.AMT. NEEDED CR 02-620502						
100	465-999161-4	LF	$0.18	$18.00	WIRE, NO.16, 1 CONDUCTOR, CASE, FLEXIBLE, 19 STRAND, 2/64 IN. INSULATION CR 02-620254						
1	670-110527-4	EA	$22,018.66	$22,018.66	WIRED RACK UNI-DIRECTIONAL DOUBLE TRK, 6X6 FARADAY , COMPLETE/GCP3000, 2 CRAGG CHARGER, 2 RELAY RACK,SAFETRAN P/N T15409, USE WITH I/S 670-786834-4 OR P/N 058400-66-78A, 670-281280-4						
1	670-262739-4	EA	$31,408.11	$31,408.11	WIRED RACK, 6X6 FARADAY, 20AMP DOUBLE TRK SSCCIIIA, GCP3000D2, 2 CRAGG CHARGER, 2 RELAY RACKS, SAFTRAN P/N 20A 2TRK, USE WITH I/S 670-281280-4 W/CABLE CHUTES BEHIND THE FARADAY SHIELD						

APPROVED BY STATE	APPROVED BY RAILROAD	CAR NUMBER	SEAL NUMBER

Location: TOLEDO OH S&E Proj. No.: 10.0014 AFE No.: F10025 Drawing No.: 36002958

Store No.: P.O.Number: Date Required: Date Shipped: Vendor: Interrail Engineering, INC

Qty.	Class-Item-CD	UI	Price per Item	Total Price	Item Description	Quantity Shipped	Quantity Installed Date Quan.	Date Quan.	Date Quan.	Quantity Returned (Credit)	Special Instructions
2	450-986008-4	EA	$24.84	$49.68	WRENCH, TEST POST TYPE B DWG 55393-3, GR.1						

Total Material: $147,490.48

APPROVED BY STATE	APPROVED BY RAILROAD	CAR NUMBER	SEAL NUMBER

11-Dec-06

Detailed Estimate for Grade Crossing Warning Devices

City/State: TOLEDO, OH
MilePost: CD-295.85
State Proj. No.:
S&E Proj. No.: 10.0014
Man Days: 168

Road: HOLLAND-SYLVANIA RD.
DOT/AAR: 509457F
County: LUCAS
AFE: F10025
File Number: 061-10.0800

*****Purchases - Others*****		
Meals and Lodging:	$15,807.05	
Rental of Equipment:	$34,557.60	
(2 Trucks, 1 Backhoe w/ Trailer and 1 Pipe-Pusher for 42 Days)		
Construction Supervision Vehicle:	$2,764.61	
Purchases - Other Total:		$53,129.26
*****Material And Additives*****		
Material Cost:	$147,490.00	
Sales and Use Tax:	$0.00	
Material Handling Freight:	$7,374.52	
Material Total:		$154,864.52
*****Labor And Additives*****		
Labor Cost:	$40,656.00	
(4 man crew at $968.00 a day for: 42 days)		
Payroll Tax & Overheads:	$40,107.14	
Preliminary Engineering:	$16,556.89	
Construction Supervision:	$11,477.19	
Labor Total:		$108,797.22
	Project Cost:	$316,791.00
	Scrap / Salvage Credit:	$0.00
	Project Total:	**$316,791.00**

Estimated on: 11-Dec-06

Estimated by: ndr3j

Estimate valid for 1 year from date of estimate

Norfolk Southern Railway

Highway Crossing Signalization Program - Material List

Do not substitute items without permission from S & E Engineering

City:	TOLEDO
Road:	HOLLAND-SYLVANIA RD.
Mile Post:	CD-295.85
Drawing Number:	36002958
State ProjectNumber:	
County:	LUCAS
A A R Number:	509457F
Project Number:	10.0014
File Number:	061-10.0800
A F E Number:	F10025
Store Number:	
Supervisor:	L.J. PAWLOWSKI
Tax Code:	3500

Vendor to supply the following copies after pricing:

1 Set - Material Management with original Invoice
2 Sets - with plans shipped in car with material
1 Set - S&EGen. Supt. Construction w/copy of invoice

Location: TOLEDO OH S&E Proj. No.: 10.0014 AFE No.: F10025 Drawing No.: 36002958

Store No.: P.O.Number: Date Required: Date Shipped: Vendor: Interrail Engineering, INC

Qty.	Class-Item-CD	UI	Price per Item	Total Price	Item Description	Quantity Shipped	Quantity Installed Date Quan.	Date Quan.	Date Quan.	Quantity Returned (Credit)	Special Instructions
3	670-360693-4	EA	$5.04	$15.12	AAR/DOT NUMBER PLATE/DECAL, ORDER 3 PER PROJECT. 60 DAY LEAD TIME. SUPPLIED BY S'TRAN.						
2	165-006505-4	EA	$1,051.54	$2,103.08	AC SERVICE, COMPLETE LESS METER BASE, ASSEMBLED ON 30' POLE						
24	670-119241-4	EA	$32.80	$787.20	ARRESTOR, LIGHTNING HEAVY DUTY CLEAR VIEW SAFETRAN 022585-1X						
19	105-871901-4	EA	$161.57	$3,069.83	BATTERY,GNB 265AH MODEL 50A11 SINGLE CELL 2.25 VOLTS						
2	670-980689-4	EA	$71.71	$143.42	BRACKET HIGH WIND, (RIGID 3'), WIG- 191036, WALRUS TUSK TYPE						
2	670-561375-4	EA	$1,197.90	$2,395.80	BRACKET, GATE SAVER, NEG385102GS, SPRING LOADED SWING AWAY ADAPTER FOR FIBERGLASS/ALUMINUM GATES, USE WITH GATE 28' AND LESS						
2	670-356949-4	EA	$97.00	$194.00	CABLE, 10' GENERATOR HOOK UP, SERRMI P/N 40524. FEMALE CONNECTOR						
7000	465-292862-4	LF	$1.04	$7,280.00	CABLE, U-2-6 TWISTED, S-23 OKONITE 113-12-3933 SOLID TINNED CONDUCTOR						
4000	465-292945-4	LF	$1.35	$5,400.00	CABLE, U-5-14, S-54 OKONITE 206-14-6885						
400	465-292929-4	LF	$3.05	$1,220.00	CABLE, U.G. 5 COND. NO. 6 AWG SOLID COPPER CABLE TO MEET NS CORP. SPEC. FOR SIGNAL						
400	465-939422-4	LF	$2.55	$1,020.00	CABLE, UG 12 CONDUCTOR NO 14 AWG SOLID EACH CONDUCTOR WITH 5/64 IN INSULATION 10 MIL						
600	465-791835-4	FT	$2.22	$1,332.00	CABLE, UG AC ENTRANCE 3C#6-7X OKONITE FMPF-L 094-078 TR W/G 1 X 8 7X W010 BRZ TAPE 600V PRODUCT CODE 206-11-6070						
2	670-128745-4	EA	$180.02	$360.04	CHOKE, BATTERY SAFETRAN NO 8A065A FOR GRADE CROSSING PREDICTOR						
160	165-544477-4	FT	$2.55	$408.00	CONDUIT, 4"x10' PVC, SCHEDULE 80 BELL CONNECTOR AT ONE END, 1/2 PT. GLUE IN KIT 670-123298-4						
16	670-090450-4	EA	$50.38	$806.08	CONNECTOR,WELDED FAR RAIL HARMON A1000-2W						
16	670-486646-4	EA	$41.62	$665.92	CONNECTOR,WELDED NEAR RAIL HARMON A1000-1W						
2	670-793404-4	EA	$838.37	$1,676.74	COUNTERWEIGHT PKAGE, 17-24'GATE S'TRAN S- MECH ONLY, STAINLESS, TO INCLUDE HUB, SUPPORT ARMS						

APPROVED BY STATE	APPROVED BY RAILROAD	CAR NUMBER	SEAL NUMBER

Location: TOLEDO OH S&E Proj. No.: 10.0014 AFE No.: F10025 Drawing No.: 36002958

Store No.: P.O.Number: Date Required: Date Shipped: Vendor: Interrail Engineering, INC

Qty.	Class-Item-CD	UI	Price per Item	Total Price	Item Description	Quantity Shipped	Quantity Installed Date Quan.	Date Quan.	Date Quan.	Quantity Returned (Credit)	Special Instructions
4	670-760012-4	EA	$40.02	$160.08	COVER, FOR 1 WAY FLASHING LIGHT ASSY. 18 OZ. BLACK VINYL COATED NYLON. ====TO COVER 2 LAMPS====						
1	670-986650-4	EA	$375.69	$375.69	DISPOSAL, CONSTRUCTION DEBRIS AND CLEANING X'ING EQUIPMENT CONTAINER						
8	670-228165-4	EA	$10.73	$85.84	EQUALIZER, SAFETRAN 022700-1X LESS BASE, MODERN NO. 700-1 SHUNT ARRESTER TRACK CIRCUITS CR 02-197950						
1	670-000004-4	EA	$700.00	$700.00	FCC LICENSE FOR MONITOR/RADIO						
8	670-000003-4	EA	$255.85	$2,046.80	FILL/STONE #57, QUANITY IS BASED ON TRUCK LOAD PLUS DELIVERY COST						
2	670-015231-4	EA	$423.50	$847.00	FOUNDATION,DIXIE,S-2 GATE 5'6" ASSEMBLED						
2	670-257031-4	EA	$297.88	$595.76	GATE, ARM FIBERGLASS-ALUMINUM 17-24 FT., INCLUDES GATE GUARD FOR GATE LIGHT CABLE, NEG P/N 8002-244NFS/CG						
2	670-930665-4	EA	$43.57	$87.14	INDUCTOR, SIMULATED TRACK SAFETRAN 8V617-1400						
2	670-477991-4	EA	$317.90	$635.80	KIT, GROUNDING ASSY FOR AL I/S INCLUDES 8 GRD RDS,200'#4WIRE,12 4 WIRE ONE-SHOTS. ERICO SBK206						
3	670-123298-4	EA	$256.93	$770.79	KIT, HARDWARE SUPPLIES REQUIRED X'ING P'CKAGES. WEB CONNECTORS FOR SHUNT(8EA) TAPE, AMPS,P'GUM PAINT,SLEEVES,TAGS,GLUE, 100 EA WHITE TAGS,)NE CAN BLUE MARKING PAINT ETC...						
4	670-835845-4	EA	$14.51	$58.04	KIT, SPLICING SCOTCHAST #72-N1 FOR SPLICING 1C #9, 2C #6 UG OR AERIAL						
4	670-835853-4	EA	$32.93	$131.72	KIT, SPLICING SCOTCHAST #72-N2 FOR SPLICING 2C #9, 2C #14, 7C #14 UG OR AERIAL						
2	670-764166-4	EA	$907.65	$1,815.30	LAMP ASSY, 5" MAST MTG. 2W IND. 20" BKGRD, FLX-12 W/BULB STRAN #042003-487XNS						
6	165-643547-4	EA	$4.30	$25.80	LAMP, 18 WATT 10 VOLT S-11 SC BAY 18S11/1SC CLEAR RWY SIGNAL UJ-71463 GE						
24	670-440826-4	EA	$1.01	$24.24	LINK, SAFETRAN 024620-1X INSL TESTING COMP 1 IN CENTER SIGNAL CIRCUITS CR 02-286662						
6	255-590880-4	EA	$16.12	$96.72	LOCK, AMERICAN LOCK MODEL H-10KA KEYED ALIKE TO PRIVATE KEYWAY D456 AND STAMPED "NS SIG"						

APPROVED BY STATE	APPROVED BY RAILROAD	CAR NUMBER	SEAL NUMBER

Location: TOLEDO OH S&E Proj. No.: 10.0014 AFE No.: F10025 Drawing No.: 36002958

Store No.: P.O.Number: Date Required: Date Shipped: Vendor: Interrail Engineering, INC

Qty.	Class-Item-CD	UI	Price per Item	Total Price	Item Description	Quantity Shipped	Quantity Installed Date Quan.	Date Quan.	Date Quan.	Quantity Returned (Credit)	Special Instructions
2	670-637778-4	EA	$1,031.41	$2,062.82	MAST, 5" ALUMINUM 13'10" WITH DOUBLE JCT. BOX BASE. S'TRAN P# 070519-11AX.						
2	670-850933-4	EA	$3,352.65	$6,705.30	MECHANISM, GATE MODEL S-60, WITH DEFROSTER AND MINI TRACKSIDE SENSOR S'TRAN # 0740007-X002B3						
2	000-000000-4	EA	$5,000.00	$10,000.00	MIS. UNDERGROUND BORING						
5	670-000001-4	EA	$316.23	$1,581.15	MISC. MATERIAL						
4	670-001347-4	EA	$63.27	$253.08	PACKAGE, HARDWARE SIGN 5 IN. MOUNTING, SERRMI A1250-5, HARMON @200965-000, OR						
2	255-646807-4	EA	$10.38	$20.76	PADLOCK, SAFETRAN PART NO. 030399-29X SCREW TYPE FOR CIR CONTROLLER AND BTY. BOX						
1	670-514605-4	EA	$8.45	$8.45	PINNACLE, W-C SECT 1-11, 4"& 5" REF K1 110-8 OR SAFETRAN NO. @035045-503X						
4	670-555609-4	EA	$45.12	$180.48	PLUGBOARD, TYPE B-1 GRS A62-506 OR HARMON @7062-506 OR						
1	670-973480-4	EA	$7,665.27	$7,665.27	PREDICTOR, DUAL FREQ. 3000 2 TRACK, SAFETRAN #80200-102-0 NO ISLAND, W/PROCESSOR 80214						
8	165-103293-4	EA	$62.43	$499.44	PROTECTOR, LIGHTNING & SURGE LPC 10560-51, 3 ELECTRODE WITH SPADE TERMINAL						
2	165-902002-4	EA	$308.00	$616.00	PROTECTOR, SURGE 120/240VAC, ERICO P/N EPD120/240TDFL						
18	465-002899-4	EA	$22.06	$397.08	REEL, CABLE DISPOSABLE FOR CROSSING SIGNAL PACKAGES						
2	670-742096-4	EA	$41.80	$83.60	RELAY INTERFACE PROBE, ULTRATECH PN 16031-00						
4	670-707995-4	EA	$313.67	$1,254.68	RELAY, TYPE B1, NEV LINE, 900 OHMS,.008 AMPERES GRS A62-308 OR SAFETRAN @400003						
4	435-805560-4	EA	$6.25	$25.00	SAND, 25LB BAG FOR CABLE ENTRANCE INTO THE SHELTER						
1	670-816502-4	EA	$4,903.75	$4,903.75	SEARII AUTOMATED INSPECTOR SYSTEM KIT, w/ 1-iLOD,1-eBELL, 2-GTS, WITHOUT MTSS, 1-GFT,1-VHFC, 2- RECORDER INTERFACE MODULE, 1-ECHELON CONNECTOR						
2	670-281280-4	EA	$7,006.00	$14,012.00	SHELTER BARE 6X6, ALUMN, FARADAY, W/CABLE CHUTES BEHIND TERMINAL BOARD, W/GEN. CONN. W/ADJUSTABLE PIERS, ,SAFTETRAN P/N 058400-66-78A						

APPROVED BY STATE	APPROVED BY RAILROAD	CAR NUMBER	SEAL NUMBER

Location: TOLEDO OH S&E Proj. No.: 10.0014 AFE No.: F10025 Drawing No.: 36002958

Store No.: P.O.Number: Date Required: Date Shipped: Vendor: Interrail Engineering, INC

Qty.	Class-Item-CD	UI	Price per Item	Total Price	Item Description	Quantity Shipped	Quantity Installed Date Quan.	Date Quan.	Date Quan.	Quantity Returned (Credit)	Special Instructions
8	670-586967-4	EA	$37.68	$301.44	SHUNT COVER W/LAG SCREWS, 19"X19", SERRMI #40271, ORDER 1 PER SHUNT						
4	670-688850-4	EA	$370.27	$1,481.08	SHUNT, MULTI-FREQ. #62775-3497 SAFETRAN NARROW BAND						
4	670-645460-4	EA	$596.03	$2,384.12	SHUNT, MULTI-FREQ. #62775-8621 SAFETRAN NARROW BAND						
2	670-393331-4	EA	$37.43	$74.86	SIGN CROSSING MALFUNCTION ASSEMBLY FOR 4" AND 5" MAST, SAFETRAN #T17215						
2	670-806648-4	EA	$56.42	$112.84	SIGN, X-BUCK, LESS HARDWARE, SAFETRAN 035200-X CR 02-490546						
2	670-353390-4	EA	$43.04	$86.08	SIGN, "2 TRACKS" LESS HARDWARE SAFETRAN 035207-2X						
4	670-330382-4	RL	$15.68	$62.72	TAPE, THOR 3" DURATEC, ORANGE 1000' LENGTHS. "WARNING STOP DIGGING"						
24	670-478560-4	EA	$19.47	$467.28	TERMINAL BLOCK, ERICO 4 POST P/N B2700A2C1WH W/HARDWARE LESS LIGHTNING ARRESTOR						
4	610-065626-4	EA	$17.55	$70.20	ULTRA-TECH 15206-01 CONNECTIVITY BLOCK FOR GRS B1 RELAY						
10	670-007238-4	EA	$129.46	$1,294.60	UNIT, THE INSTALLATION AND WIRING OF A DEVICE WHICH REQUIRE A MINIMUM OF FOUR WIRE CONNECT-						
200	465-999111-4	LF	$0.29	$58.00	WIRE, NO.10, 1 CONDUCTOR, CASE, FLEXIBLE 37 STRAND, 3/64 IN. INSULATION-ORDER EXT.AMT. NEEDED CR 02-620502						
100	465-999161-4	LF	$0.18	$18.00	WIRE, NO.16, 1 CONDUCTOR, CASE, FLEXIBLE, 19 STRAND, 2/64 IN. INSULATION CR 02-620254						
1	670-110527-4	EA	$22,018.66	$22,018.66	WIRED RACK UNI-DIRECTIONAL DOUBLE TRK, 6X6 FARADAY , COMPLETE/GCP3000, 2 CRAGG CHARGER, 2 RELAY RACK,SAFETRAN P/N T15409, USE WITH I/S 670-786834-4 OR P/N 058400-66-78A, 670-281280-4						
1	670-262739-4	EA	$31,408.11	$31,408.11	WIRED RACK, 6X6 FARADAY, 20AMP DOUBLE TRK SSCCIIIA, GCP3000D2, 2 CRAGG CHARGER, 2 RELAY RACKS, SAFTRAN P/N 20A 2TRK, USE WITH I/S 670-281280-4 W/CABLE CHUTES BEHIND THE FARADAY SHIELD						

APPROVED BY STATE	APPROVED BY RAILROAD	CAR NUMBER	SEAL NUMBER

Location: TOLEDO OH S&E Proj. No.: 10.0014 AFE No.: F10025 Drawing No.: 36002958

Store No.: P.O.Number: Date Required: Date Shipped: Vendor: Interrail Engineering, INC

Qty.	Class-Item-CD	UI	Price per Item	Total Price	Item Description	Quantity Shipped	Quantity Installed Date Quan.	Date Quan.	Date Quan.	Quantity Returned (Credit)	Special Instructions
2	450-986008-4	EA	$24.84	$49.68	WRENCH, TEST POST TYPE B DWG 55393-3, GR.1						

Total Material: $147,490.48

APPROVED BY STATE	APPROVED BY RAILROAD	CAR NUMBER	SEAL NUMBER

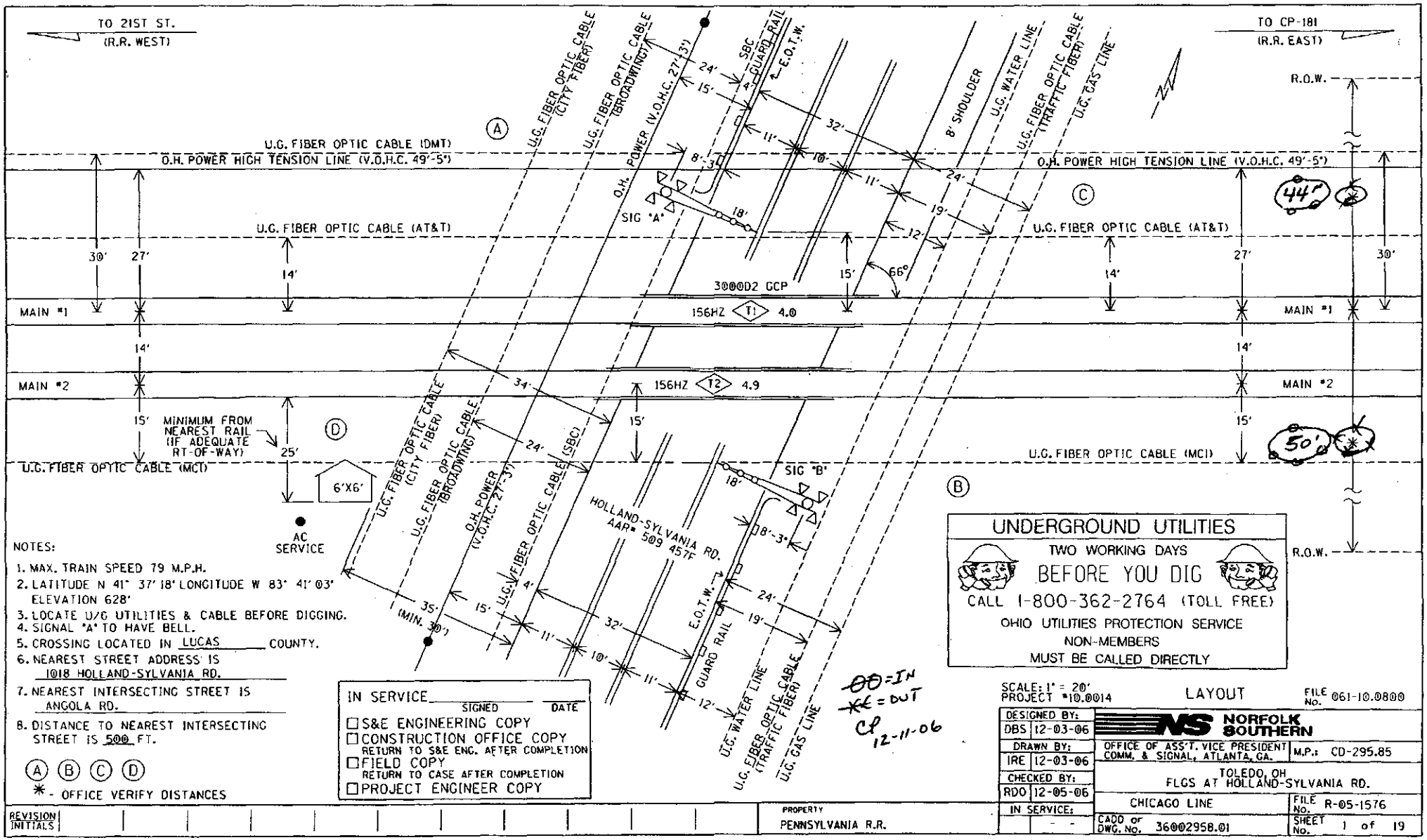

NOTES:

1. MAX. TRAIN SPEED 79 M.P.H.
2. LATITUDE N 41° 37' 18" LONGITUDE W 83° 41' 03" ELEVATION 628'
3. LOCATE U/G UTILITIES & CABLE BEFORE DIGGING.
4. SIGNAL "A" TO HAVE BELL.
5. CROSSING LOCATED IN LUCAS COUNTY.
6. NEAREST STREET ADDRESS IS 1018 HOLLAND-SYLVANIA RD.
7. NEAREST INTERSECTING STREET IS ANGOLA RD.
8. DISTANCE TO NEAREST INTERSECTING STREET IS 500 FT.

Ⓐ Ⓑ Ⓒ Ⓓ

✱ - OFFICE VERIFY DISTANCES

UNDERGROUND UTILITIES

TWO WORKING DAYS

BEFORE YOU DIG

CALL 1-800-362-2764 (TOLL FREE)

OHIO UTILITIES PROTECTION SERVICE

NON-MEMBERS

MUST BE CALLED DIRECTLY

IN SERVICE _____ SIGNED _____ DATE

☐ S&E ENGINEERING COPY
☐ CONSTRUCTION OFFICE COPY
RETURN TO S&E ENG. AFTER COMPLETION
☐ FIELD COPY
RETURN TO CASE AFTER COMPLETION
☐ PROJECT ENGINEER COPY

OO = IN
✱ = OUT
CP 12-11-06

SCALE: 1" = 20'
PROJECT #10.0014

LAYOUT

FILE No. 061-10.0800

DESIGNED BY: DBS 12-03-06	NORFOLK SOUTHERN
DRAWN BY: IRE 12-03-06	OFFICE OF ASS'T. VICE PRESIDENT COMM. & SIGNAL, ATLANTA, GA. — M.P.: CD-295.85
CHECKED BY: RDO 12-05-06	TOLEDO, OH FLGS AT HOLLAND-SYLVANIA RD.
IN SERVICE:	CHICAGO LINE — FILE No. R-05-1576
	CADD or DWG. No. 36002958.01 — SHEET No. 1 of 19

REVISION INITIALS

PROPERTY
PENNSYLVANIA R.R.

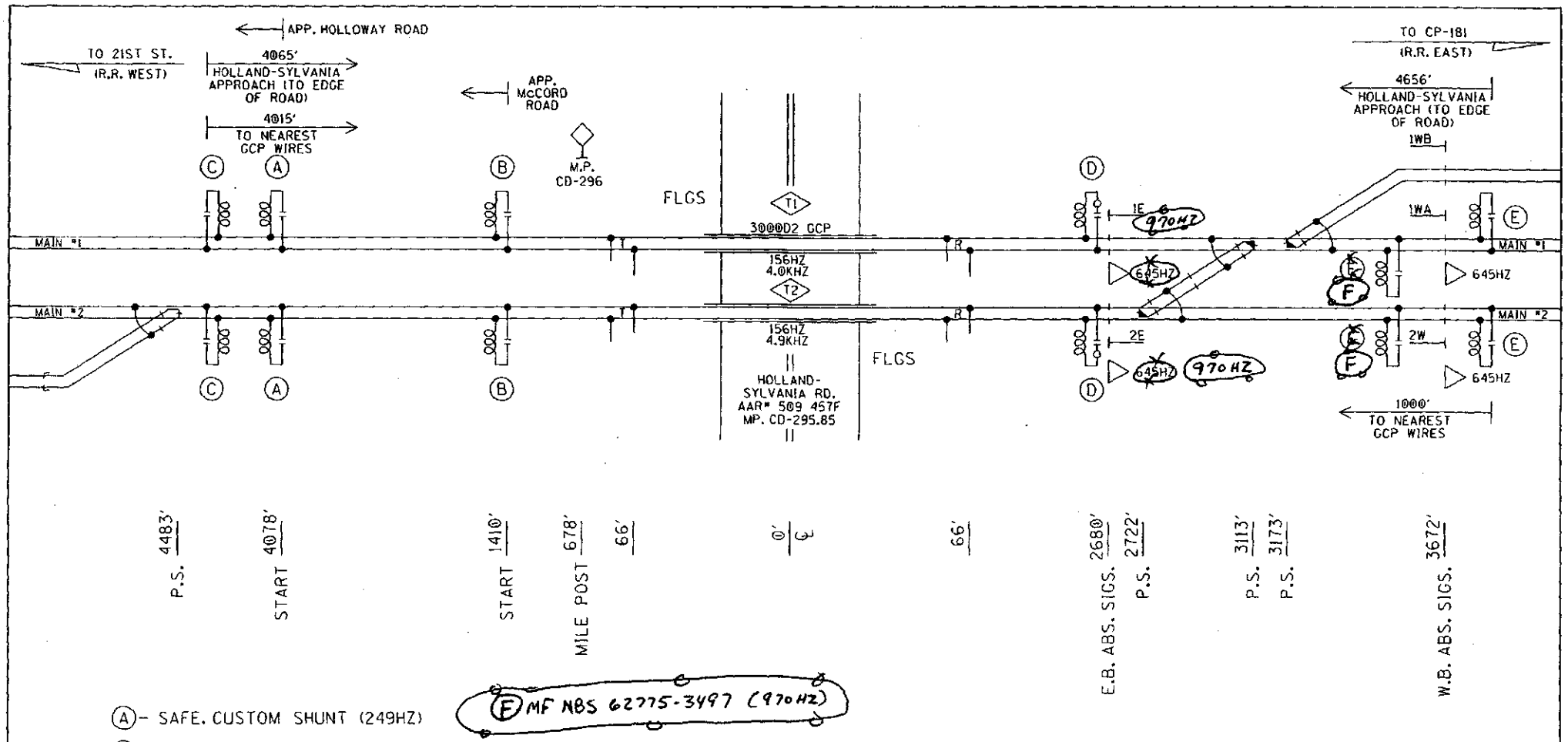

(F) MF NBS 62775-3497 (970HZ)

(A)- SAFE. CUSTOM SHUNT (249HZ)

(B)- SAFE. 62775 (86HZ)

(C)- MF NBS 62775-8261 (156HZ)

(D)- MF NBS 62775-8261 (156HZ) WITH SAFETRAN 8V617-1400

(E)- MF NBS 62775-3497 (645HZ)

~~00~~ = IN
~~XX~~ = OUT
CP
12-11-06

PROFILE

DESIGNED BY: DBS 12-03-06	NORFOLK SOUTHERN	
DRAWN BY: IRE 12-03-06	OFFICE OF ASS'T. VICE PRESIDENT COMM. & SIGNAL, ATLANTA, GA.	M.P.: CD-295.85
CHECKED BY: RDO 12-05-06	TOLEDO, OH FLGS AT HOLLAND-SYLVANIA RD.	
IN SERVICE: - -	CHICAGO LINE	FILE No. R-05-1576
	CADD or DWG. No. 36002958.02	SHEET No. 2 of 19

REVISION INITIALS

PROPERTY PENNSYLVANIA R.R.

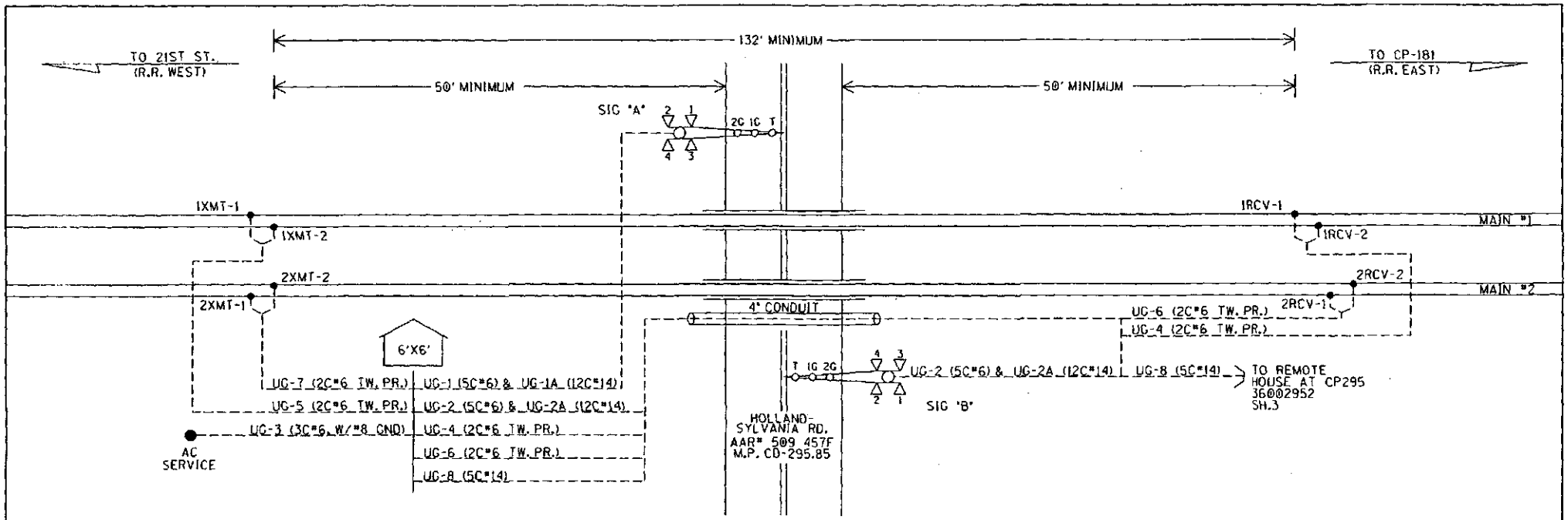

UG-1-5CUG #6
AEC
AEZ
AEB
B16-A
N16-A

UG-2-5CUG #6
BEC
BEZ
BEB
B16-B
N16-B

UG-1A-12CUG #14
AXG
NAXG
AXX
1AXX
XGP1
AGBX120
AGNX120
AMTSS
SPARE
SPARE
SPARE
SPARE

UG-2A-12CUG #14
BXG
NBXG
BXX
1BXX
XGP1
XGP
BGBX120
BGNX120
BMTSS
SPARE
SPARE
SPARE

UG-3-3CUG #6 W/#8 GND
BX120-A
BX120-B
NX120
GND

UG-4-TW. PR. #6
1RCV-1
1RCV-2

UG-5-TW. PR. #6
1XMT-1
1XMT-2

UG-6-TW. PR. #6
2RCV-1
2RCV-2

UG-7-TW. PR. #6
2XMT-1
2XMT-2

UG-8-5CUG#14
85-1DAXP
N85-1DAXP
85-2DAXP
N85-2DAXP
SPARE

CABLE PLAN

DESIGNED BY: DBS 12-03-06	NORFOLK SOUTHERN		
DRAWN BY: IRE 12-03-06	OFFICE OF ASS'T. VICE PRESIDENT COMM. & SIGNAL, ATLANTA, GA.	M.P.: CD-295.85	
CHECKED BY: RDO 12-05-06	TOLEDO, OH FLGS AT HOLLAND-SYLVANIA RD.		
IN SERVICE: - -	CHICAGO LINE	FILE No. R-05-1576	
	CADD or DWG. No. 36002958.03	SHEET No. 3 of 19	

REVISION INITIALS

PROPERTY
PENNSYLVANIA R.R.

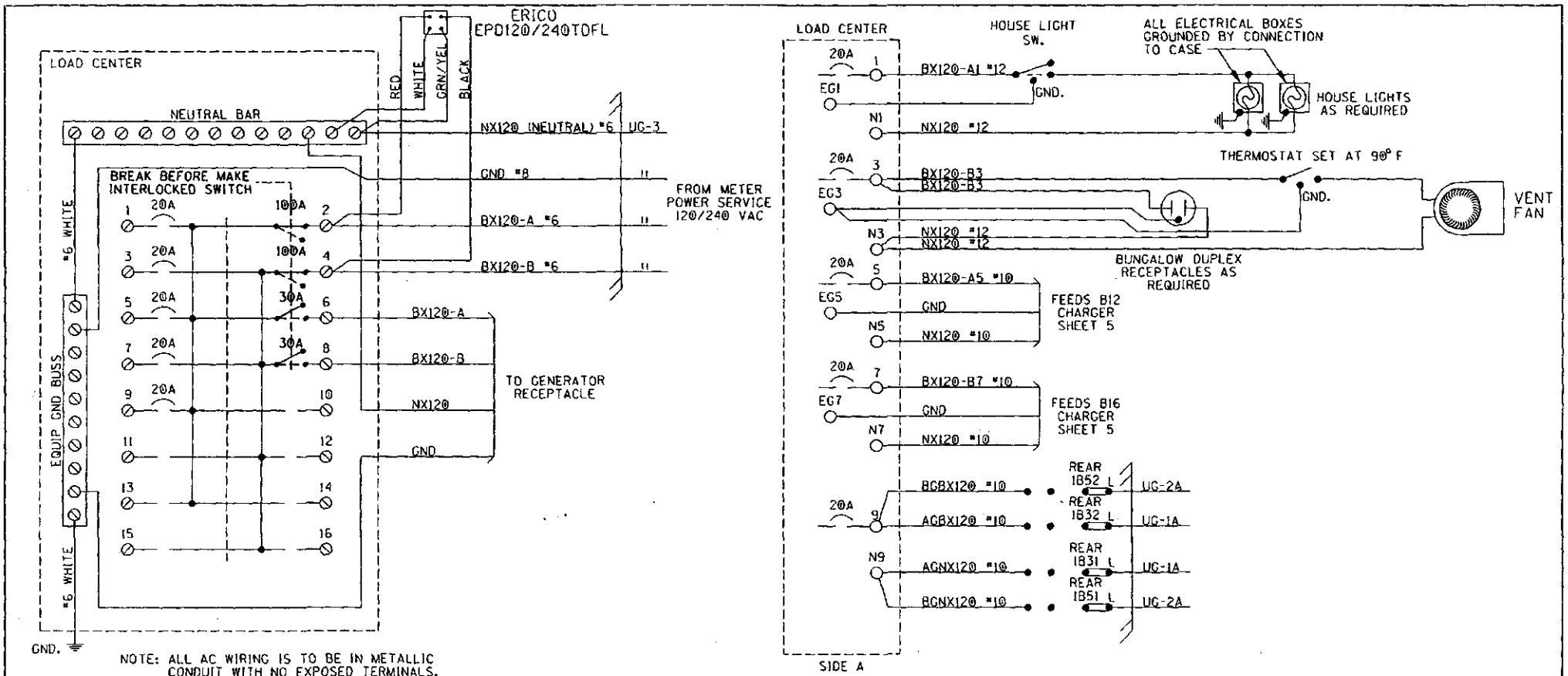

NOTE: ALL AC WIRING IS TO BE IN METALLIC CONDUIT WITH NO EXPOSED TERMINALS. ALL AC 120V AND 240V EQUIPMENT IS TO BE PROPERLY GROUNDED.

SQUARE "D" PART NUMBERS:

LOAD CENTER——QO116L125G
10A 1P CIR BKR——QO110
20A 1P CIR BKR——QO120
30A 1P CIR BKR——QO130
30A 2P CIR BKR——QO230
60A 2P CIR BKR——QO260
100A 2P CIR BKR——QO2100
MECH INTERLOCK——PK40T1M4LA

GENERATOR RECEPTACLE:
MALE CONNECTOR - NEMA L1430-FI

LOAD CENTER WIRING

DESIGNED BY: DBS 12-03-06	NORFOLK SOUTHERN		
DRAWN BY: JRE 12-03-06	OFFICE OF ASS'T. VICE PRESIDENT COMM. & SIGNAL, ATLANTA, GA.	M.P.: CD-295.85	
CHECKED BY: RDO 12-05-06	TOLEDO, OH FLGS AT HOLLAND-SYLVANIA RD.		
IN SERVICE: - -	CHICAGO LINE	FILE No. R-05-1576	
	CADD or DWG. No. 36002958.04	SHEET No. 4 of 19	

REVISION INITIALS											

PROPERTY
PENNSYLVANIA R.R.

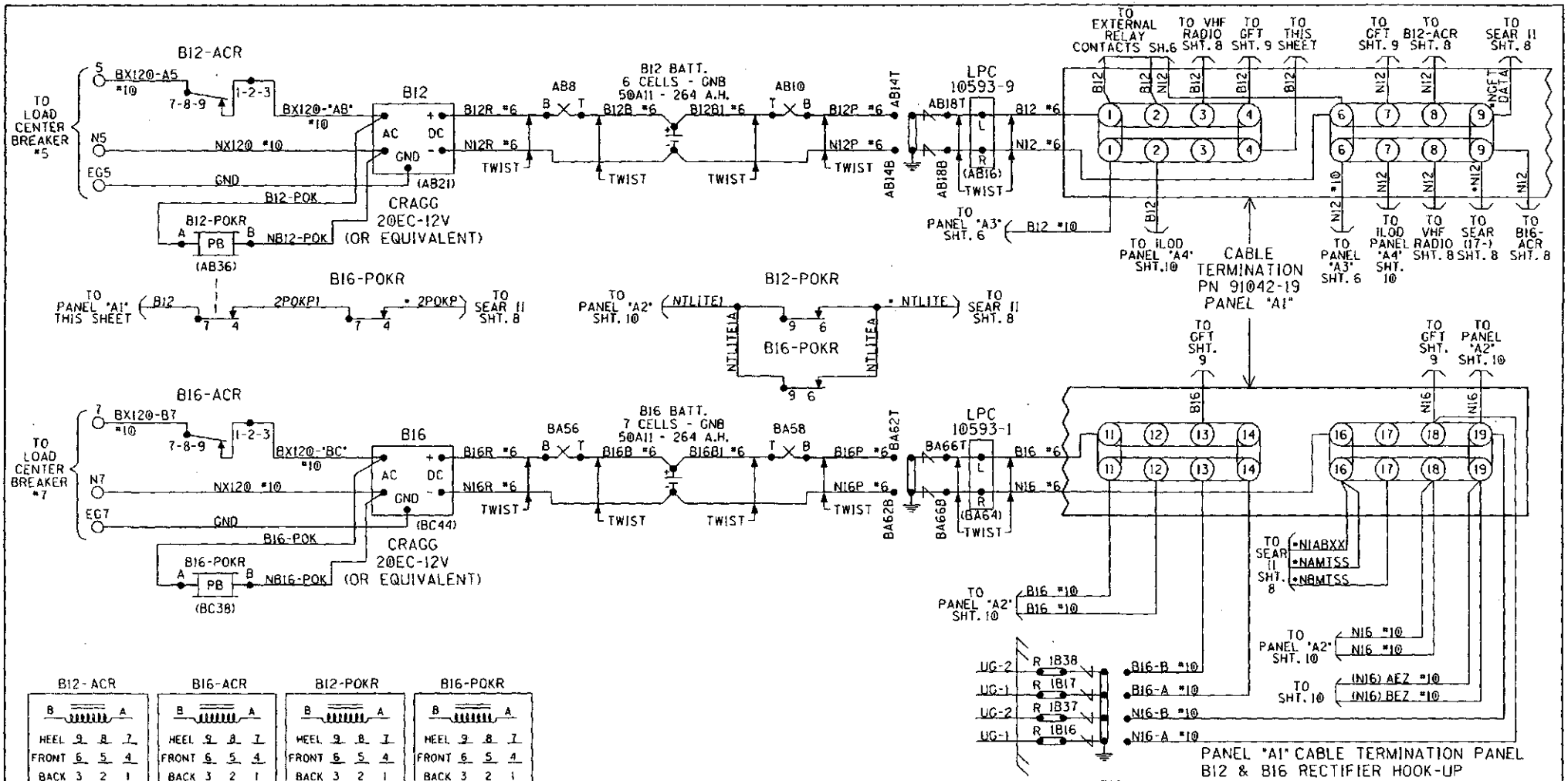

NOTES:
ALL WIRING TO BE #16AWG UNLESS NOTED OTHERWISE.
* = CABLE PROVIDED WITH SEAR II

DESIGNED BY: DBS 12-03-06	NORFOLK SOUTHERN		
DRAWN BY: TRE 12-03-06	OFFICE OF ASS'T. VICE PRESIDENT COMM. & SIGNAL, ATLANTA, GA.	M.P.: CD-295.85	
CHECKED BY: RDO 12-05-06	TOLEDO, OH FLCS AT HOLLAND-SYLVANIA RD.		
IN SERVICE: - -	CHICAGO LINE	FILE No. R-05-1576	
	CADD or DWG. No. 36002958.05	SHEET No. 5 of 19	

REVISION INITIALS

PROPERTY PENNSYLVANIA R.R.

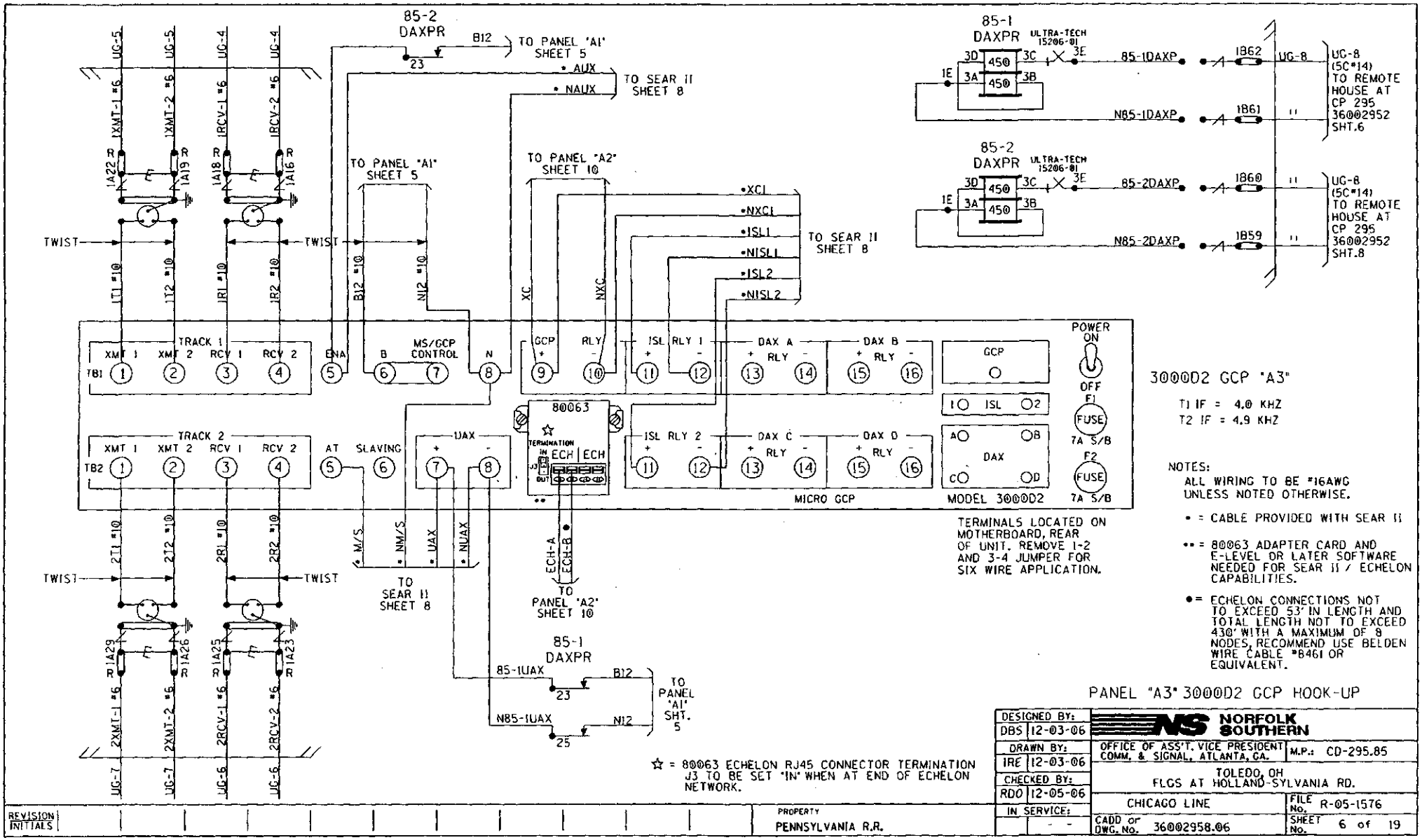
85-2 DAXPR
B12
TO PANEL 'A1' SHEET 5
• AUX
• NAUX
TO SEAR II SHEET 8
85-1 DAXPR
ULTRA-TECH 15206-01
85-1DAXP
N85-1DAXP
1B62
1B61
UG-8 (5C#14) TO REMOTE HOUSE AT CP 295 36002952 SHT.6
85-2 DAXPR
ULTRA-TECH 15206-01
85-2DAXP
N85-2DAXP
1B60
1B59
UG-8 (5C#14) TO REMOTE HOUSE AT CP 295 36002952 SHT.8
TO PANEL "A1" SHEET 5
TO PANEL "A2" SHEET 10
•XCI
•NXCI
•ISL1
•NISL1
•ISL2
•NISL2
TO SEAR II SHEET 8
TWIST
TRACK 1
XMT 1
XMT 2
RCV 1
RCV 2
TB1
ENA
B
MS/GCP CONTROL
N
GCP
RLY
ISL RLY 1
DAX A
DAX B
80063
TERMINATION
ECH
ECH
J3
IN
OUT
TRACK 2
TB2
AT
SLAVING
UAX
ISL RLY 2
DAX C
DAX D
MICRO GCP
MODEL 3000D2
POWER ON
OFF
F1
FUSE
7A S/B
F2
FUSE
7A S/B
ISL
DAX
TERMINALS LOCATED ON MOTHERBOARD, REAR OF UNIT. REMOVE 1-2 AND 3-4 JUMPER FOR SIX WIRE APPLICATION.
3000D2 GCP "A3"
T1 IF = 4.0 KHZ
T2 IF = 4.9 KHZ
NOTES:
ALL WIRING TO BE #16AWG UNLESS NOTED OTHERWISE.
• = CABLE PROVIDED WITH SEAR II
•• = 80063 ADAPTER CARD AND E-LEVEL OR LATER SOFTWARE NEEDED FOR SEAR II / ECHELON CAPABILITIES.
• = ECHELON CONNECTIONS NOT TO EXCEED 53' IN LENGTH AND TOTAL LENGTH NOT TO EXCEED 430' WITH A MAXIMUM OF 8 NODES, RECOMMEND USE BELDEN WIRE CABLE #8461 OR EQUIVALENT.
• M/S
• NM/S
• UAX
• NUAX
TO SEAR II SHEET 8
ECH-A
ECH-B
TO PANEL "A2" SHEET 10
85-1 DAXPR
85-1UAX
N85-1UAX
TO PANEL 'A1' SHT. 5
☆ = 80063 ECHELON RJ45 CONNECTOR TERMINATION J3 TO BE SET "IN" WHEN AT END OF ECHELON NETWORK.
PANEL "A3" 3000D2 GCP HOOK-UP
DESIGNED BY: DBS 12-03-06
DRAWN BY: IRE 12-03-06
CHECKED BY: RDO 12-05-06
IN SERVICE:
NORFOLK SOUTHERN
OFFICE OF ASS'T. VICE PRESIDENT COMM. & SIGNAL, ATLANTA, GA.
M.P.: CD-295.85
TOLEDO, OH
FLGS AT HOLLAND-SYLVANIA RD.
CHICAGO LINE
FILE No. R-05-1576
CADD or DWG. No. 36002958.06
SHEET No. 6 of 19
REVISION INITIALS
PROPERTY
PENNSYLVANIA R.R.

3000D2 PROGRAMMING CHART	(LEVEL: J)
NUMBER OF TRACK TRANSCEIVERS	2
T1: FREQUENCY	156Hz
T2: FREQUENCY	156Hz
T1: UNIDIRECTIONAL/BIDIRECTIONAL	BI
T2: UNIDIRECTIONAL/BIDIRECTIONAL	BI
T1: XMIT LEVEL (MAX/MED)	MED
T2: XMIT LEVEL (MAX/MED)	MED
T1: PREDICTOR/MOTION SENSOR	PRED
T2: PREDICTOR/MOTION SENSOR	PRED
T1: WARNING TIME	30 Sec
T2: WARNING TIME	30 Sec
T1: APPROACH DISTANCE	4015 Ft
T2: APPROACH DISTANCE	4015 Ft
UAX1 PICKUP DELAY (UAX) (0 = OFF)	15 Sec
ENA/UAX2 DELAY (0 = ENA)	15 Sec
T1: ISLAND DISTANCE	132 Ft
T2: ISLAND DISTANCE	132 Ft
NUMBER OF DAX'S	0 Ea
DAX A TRACK ASSIGNMENT (T1/T2)	---
DAX A DISTANCE (0 = PREEMPT)	Ft
DAX A WARNING TIME	Sec
DAX B TRACK ASSIGNMENT (T1/T2)	---
DAX B DISTANCE (0 = PREEMPT)	Ft
DAX B WARNING TIME	Sec
DAX C TRACK ASSIGNMENT (T1/T2)	---
DAX C DISTANCE (0 = PREEMPT)	Ft
DAX C WARNING TIME	Sec
DAX D TRACK ASSIGNMENT (T1/T2)	---
DAX D DISTANCE (0 = PREEMPT)	Ft
DAX D WARNING TIME	Sec
SLAVING (MASTER/SLAVE)	MASTER
PASSWORD ENABLED	NO
RECORDER INSTALLED	NO

EXPANDED PROGRAMMING

T1: SWITCH TO MS (ENTER EZ VALUE)	10 %	
T2: SWITCH TO MS (ENTER EZ VALUE)	10 %	
T1: TRANSFER DELAY MS TO GCP (0 = OFF)	0 Sec	
T2: TRANSFER DELAY MS TO GCP (0 = OFF)	0 Sec	
T1: TRANSFER MS TO GCP PRIME (ON/OFF)	---	(1)
T2: TRANSFER MS TO GCP PRIME (ON/OFF)	---	(1)
T1: TRANSFER MS TO GCP DAX A (ON/OFF)	---	(2)
T2: TRANSFER MS TO GCP DAX A (ON/OFF)	---	(2)
T1: TRANSFER MS TO GCP DAX B (ON/OFF)	---	(2)
T2: TRANSFER MS TO GCP DAX B (ON/OFF)	---	(2)
T1: TRANSFER MS TO GCP DAX C (ON/OFF)	---	(2)
T2: TRANSFER MS TO GCP DAX C (ON/OFF)	---	(2)
T1: TRANSFER MS TO GCP DAX D (ON/OFF)	---	(2)
T2: TRANSFER MS TO GCP DAX D (ON/OFF)	---	(2)
T1: PRIME PREDICTION OFFSET (0 = OFF)	0 Ft	
T2: PRIME PREDICTION OFFSET (0 = OFF)	0 Ft	
PICKUP DELAY PRIME	15 Sec	
PICKUP DELAY DAX A	-- Sec	
PICKUP DELAY DAX B	-- Sec	
PICKUP DELAY DAX C	-- Sec	
PICKUP DELAY DAX D	-- Sec	
T1: ENHANCED DETECTION (ON/OFF)	OFF	
T2: ENHANCED DETECTION (ON/OFF)	OFF	
BACK-TO-BACK T1 AND T2 (NO/YES)	---	(3)
T1: STATION STOP TIMER	10 Sec	(3)
T2: STATION STOP TIMER	10 Sec	(3)
T1: NUMBER OF TRACK WIRES (4/6)	4	
T2: NUMBER OF TRACK WIRES (4/6)	4	
T1: LOW EX ADJUSTMENT	0	
T2: LOW EX ADJUSTMENT	0	
T1: LOW EZ DETECTION	OFF	
T2: LOW EZ DETECTION	OFF	
T1: LOW EZ DETECTION TIMER (ON/OFF)	10 Min	(4)
T2: LOW EZ DETECTION TIMER (ON/OFF)	10 Min	(4)
T1: POSITIVE START (EZ LEVEL) (0 = OFF)	0	
T2: POSITIVE START (EZ LEVEL) (0 = OFF)	0	
T1: POSITIVE START TIMEOUT (0 = NONE)	-- Min	(5)
T2: POSITIVE START TIMEOUT (0 = NONE)	-- Min	(5)
SET AT OPERATION (NORMAL/DIAGNOSTIC)	NORMAL	
DIAGNOSTIC MESSAGES (ON/OFF)	ON	
DAX MESSAGES (ON/OFF)	ON	
ADVANCE PREEMPT TIMER (0 = OFF)	0	
T1: MOTION SENSING LEVEL (0 = NORMAL)	0 %	
T2: MOTION SENSING LEVEL (0 = NORMAL)	0 %	

✱ = 1ST SLOT AT LEFT END OF BAY

MODEL 3000D2 GCP MODULE ASSEMBLIES

	UPPER BAY										LOWER BAY										
MODULES POSITION	M1	M2	M3	M4	M5	M6	M7	M8	M9	M10	M11	M12	M13	M14	M15	M16	M17	M18	M19	M20	M21
MODULE NUMBERS	80211-f(1) 4.0 ISL	80211-f(2) 4.9 ISL	80012 T/R 1	80012 T/R 2	80013 RLY DRV	80214 PROCS	80255 REC-INTF	80016 (1) DAX	80016 (2)DAX	80020 +80017	80211-f(1) 4.0 ISL	80211-f(2) 4.9 ISL	80012 T/R 1	80012 T/R 2	80013 RLY DRV	80214 PROCS	80255 REC-INTF	80016 (1) DAX	80016 (2)DAX	80020 +80017	80028 XFRTMR
MODULES USED	X	X	X	X	X	X	X			X	X	X	X	X	X	X	X			X	X
							••										••				

NOTES:

1 - SEE IPI INSTRUCTION AND INSTALLATION MANUAL FOR 80211 ISLAND CALIBRATION PROCEDURE.

2 - TOGGLE SWITCH ON MOTHER BOARD:
UP = DUAL FREQ.
DOWN = SINGLE FREQ.

•• = 80214 & 80255 (WITH JUMPER) CARDS AND E-LEVEL OR LATER SOFTWARE NEEDED FOR SEAR II / ECHELON CAPABILITIES.

3000D2 PROGRAMMING NOTES:

1) AVAILALBE WHEN "TRANSFER DELAY MS TO GCP" AND "PRIME PREDICTION OFFSET" IS ON
2) AVAILABLE WHEN "TRANSFER DELAY MS TO GCP" AND DAX DISTANCE IS GREATER THAN ZERO
3) AVAILABLE WHEN "ENHANCED DETECTION" IS ON
4) AVAILABLE WHEN "LOW EZ DETECTION" IS ON
5) AVAILABLE WHEN "POSITIVE START" IS ON

PANEL "A3" 3000D2 GCP SET-UP

DESIGNED BY: DBS 12-03-06	NORFOLK SOUTHERN		
DRAWN BY: IRE 12-03-06	OFFICE OF ASS'T. VICE PRESIDENT COMM. & SIGNAL, ATLANTA, GA.	M.P.: CD-295.85	
CHECKED BY: RDO 12-05-06	TOLEDO, OH FLGS AT HOLLAND-SYLVANIA RD.		
IN SERVICE: - -	CHICAGO LINE	FILE No. R-05-1576	
	CADD or DWG. No. 36002958.07	SHEET No. 7 of 19	

REVISION INITIALS											

PROPERTY
PENNSYLVANIA R.R.

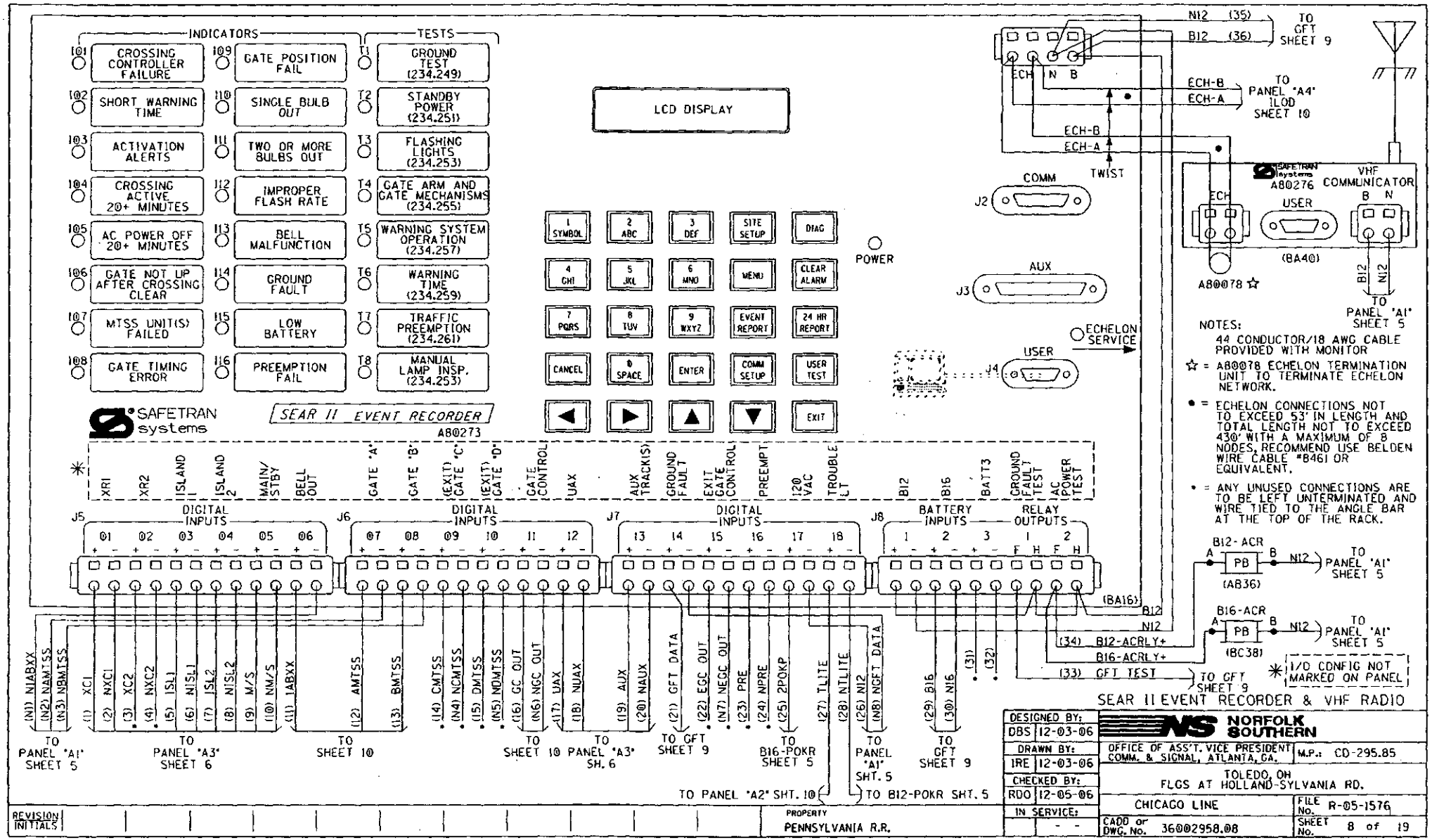
INDICATORS
TESTS
I01 CROSSING CONTROLLER FAILURE
I02 SHORT WARNING TIME
I03 ACTIVATION ALERTS
I04 CROSSING ACTIVE 20+ MINUTES
I05 AC POWER OFF 20+ MINUTES
I06 GATE NOT UP AFTER CROSSING CLEAR
I07 MTSS UNIT(S) FAILED
I08 GATE TIMING ERROR
I09 GATE POSITION FAIL
I10 SINGLE BULB OUT
I11 TWO OR MORE BULBS OUT
I12 IMPROPER FLASH RATE
I13 BELL MALFUNCTION
I14 GROUND FAULT
I15 LOW BATTERY
I16 PREEMPTION FAIL
T1 GROUND TEST (234.249)
T2 STANDBY POWER (234.251)
T3 FLASHING LIGHTS (234.253)
T4 GATE ARM AND GATE MECHANISMS (234.255)
T5 WARNING SYSTEM OPERATION (234.257)
T6 WARNING TIME (234.259)
T7 TRAFFIC PREEMPTION (234.261)
T8 MANUAL LAMP INSP. (234.253)
LCD DISPLAY
POWER
SAFETRAN systems
SEAR II EVENT RECORDER
A80273
COMM
J2
AUX
J3
USER
J4
ECHELON SERVICE
TWIST
ECH-B
ECH-A
N12 (35)
B12 (36)
TO GFT SHEET 9
TO PANEL "A4" ILOD SHEET 10
SAFETRAN Systems
A80276
VHF COMMUNICATOR
ECH
USER
B N
(BA40)
A80078 ☆
B12
N12
TO PANEL "A1" SHEET 5
NOTES:
44 CONDUCTOR/18 AWG CABLE PROVIDED WITH MONITOR
☆ = A80078 ECHELON TERMINATION UNIT TO TERMINATE ECHELON NETWORK.
• = ECHELON CONNECTIONS NOT TO EXCEED 53' IN LENGTH AND TOTAL LENGTH NOT TO EXCEED 430' WITH A MAXIMUM OF 8 NODES, RECOMMEND USE BELDEN WIRE CABLE #8461 OR EQUIVALENT.
• = ANY UNUSED CONNECTIONS ARE TO BE LEFT UNTERMINATED AND WIRE TIED TO THE ANGLE BAR AT THE TOP OF THE RACK.
B12-ACR
PB
(AB36)
B16-ACR
(BC38)
(34) B12-ACRLY+
B16-ACRLY+
(33) GFT TEST
TO GFT SHEET 9
✳ I/O CONFIG NOT MARKED ON PANEL
SEAR II EVENT RECORDER & VHF RADIO
J5 DIGITAL INPUTS
J6 DIGITAL INPUTS
J7 DIGITAL INPUTS
J8 BATTERY INPUTS
RELAY OUTPUTS
XR1 XR2 ISLAND 1 ISLAND 2 MAIN/STBY BELL OUT GATE "A" GATE "B" (EXIT) GATE "C" (EXIT) GATE "D" GATE CONTROL UAX AUX TRACK(S) GROUND FAULT EXIT GATE CONTROL PREEMPT 120 VAC TROUBLE LT B12 B16 BATT3 GROUND FAULT TEST AC POWER TEST
(BA16)
TO PANEL "A1" SHEET 5
TO PANEL "A3" SHEET 6
TO SHEET 10
TO SHEET 10 PANEL "A3" SH. 6
TO GFT SHEET 9
TO B16-POKR SHEET 5
TO PANEL "A1" SHT. 5
TO GFT SHEET 9
TO PANEL "A2" SHT. 10
TO B12-POKR SHT. 5
NORFOLK SOUTHERN
OFFICE OF ASS'T. VICE PRESIDENT COMM. & SIGNAL, ATLANTA, GA.
M.P.: CD-295.85
TOLEDO, OH
FLGS AT HOLLAND-SYLVANIA RD.
CHICAGO LINE
FILE No. R-05-1576
CADD or DWG. No. 36002958.08
SHEET No. 8 of 19
DESIGNED BY: DBS 12-03-06
DRAWN BY: IRE 12-03-06
CHECKED BY: RDO 12-05-06
IN SERVICE:
REVISION INITIALS
PROPERTY PENNSYLVANIA R.R.

SITE SET UP PROCEDURE		
	FUNCTION	LED DISPLAY
	DATE	- -
	TIME	:
	DAYLIGHT SAVINGS TIME	YES
	TIME ZONE	CST
	SITE NAME	HOLLAND-SYLVANIA RD.
	DOT NUMBER	509 457F
	MILEPOST	CD-295.85
	TESTER TYPE	CROSSING
	DATE FORMAT	MM-DD-YYYY
	TEMP FORMAT	FAHRENHEIT
	SITE TYPE	NO COMMUNICATION
	SITE ATCS	7.RRR.LLL.GGG.03.01
***	OFFICE ATCS ADDRESS	2.000.00.0000
***	POLL ID	1
***	OFFICE F8/F9	YES
***	OFFICE COMM DEVICE	SPREAD SPECTRUM RADIO
***	DIAL MODEM PORT	AUX/COMM
***	PHONE NUMBER	(OFFICE NUMBER)
***	INIT STRING	(LEAVE BLANK)
***	BACKUP SITE ADDRESS 1	
***	BACKUP SITE ADDRESS 2	
***	FIELD COMM	
****	USER PORT	BAUD 57600, N, 8, 1, NONE
****	AUX PORT	BAUD 9600, N, 8, 1, NONE
****	COMM PORT	BAUD 9600, N, 8, 1, NONE

VERIFY NUMBER OF BULBS	
CURR 1: LAMP SET UP	8 BULBS
CURR 2: LAMP SET UP	8 BULBS

CONTROL SYSTEM CONFIGURATION MENU QUESTIONS	
THE QUESTION	SELECT FROM MENU OPTION
RESET NAMES AND MODULES?	YES
NUMBER OF TRACKS?	2
NUMBER OF XR INPUTS?	1
CONSTANT WARNING DEVICE	GCP
CROSSING CONTROLLER?	SSCC III (A, PLUS)
MAIN / STANDBY	YES
AUXILIARY TRACKS?	YES
AUX TRACK	SET TO AUX
GATES?	2
EXIT GATES?	0
UAX?	DROPS MD/GCP
BATTERY BANKS?	2
PREEMPTION?	NO
ILOD MODULES?	1
LAMP TYPE?	NORMAL
AUTO INSPECTIONS?	YES
BELL SENSOR?	** 1
BELL SENSOR INPUT 7	** YES
BELL SENSOR INPUT 8	** NO
BELL SENSOR INPUT 9	** NO
BELL SENSOR INPUT 10	** NO
BELL ON?	GATES LOWERING
GATE TIP SENSORS?	YES
GROUND FAULT DETECTORS?	YES
CHANNEL 1	161.475 MHZ
CHANNEL 2	NONE
FULL APPROACH MOVE ALARMS	ACTIVATE
SSCC ATCS ADDRESS	7.RRR.LLL.GGG.07.01

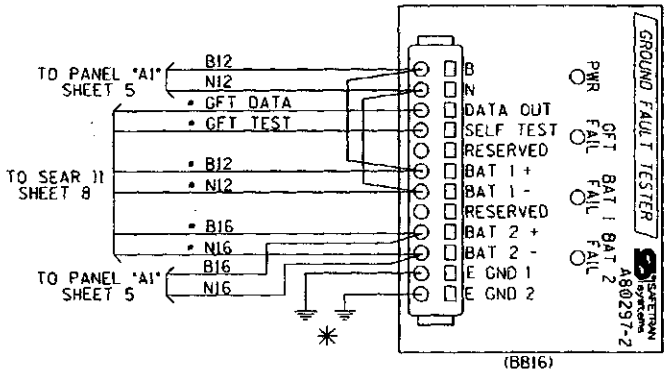

VERIFY THE BATTERY SUPPLY VOLTAGES	
B12 BATTERY VOLTAGE AT INPUT DC1	VOLT 1: .
B16 BATTERY VOLTAGE AT INPUT DC2	VOLT 2: .

NOTES:
ALL WIRING TO BE #16AWG UNLESS NOTED OTHERWISE

• = CABLE PROVIDED WITH SEAR II

** = OPTIONS: IF BELL SENSOR = 0, THEN BELL FIELDS ARE NOT USED.

*** = IF SITE TYPE = NO COMMUNICATION, THEN THESE OPTIONS ARE NOT DISPLAYED

**** = THESE SETTINGS SHOULD BE LEFT AT THE DEFAULT SETTING.

✳ = CONNECT "E GND 1" AND "E GND 2" TO INDEPENDENT GROUND POINTS ON SIDE A AND SIDE B.

SEAR II SET UP CHART
& GROUND FAULT TESTER

DESIGNED BY: DBS 12-03-06	NORFOLK SOUTHERN	
DRAWN BY: IRE 12-03-06	OFFICE OF ASS'T. VICE PRESIDENT COMM. & SIGNAL, ATLANTA, GA.	M.P.: CD-295.85
CHECKED BY: RDO 12-05-06	TOLEDO, OH FLGS AT HOLLAND-SYLVANIA RD.	
IN SERVICE: - -	CHICAGO LINE	FILE No. R-05-1576
	CADD or DWG. No. FEDFLGS2.09	SHEET No. 9 of 19

REVISION INITIALS											

PROPERTY
PENNSYLVANIA R.R.

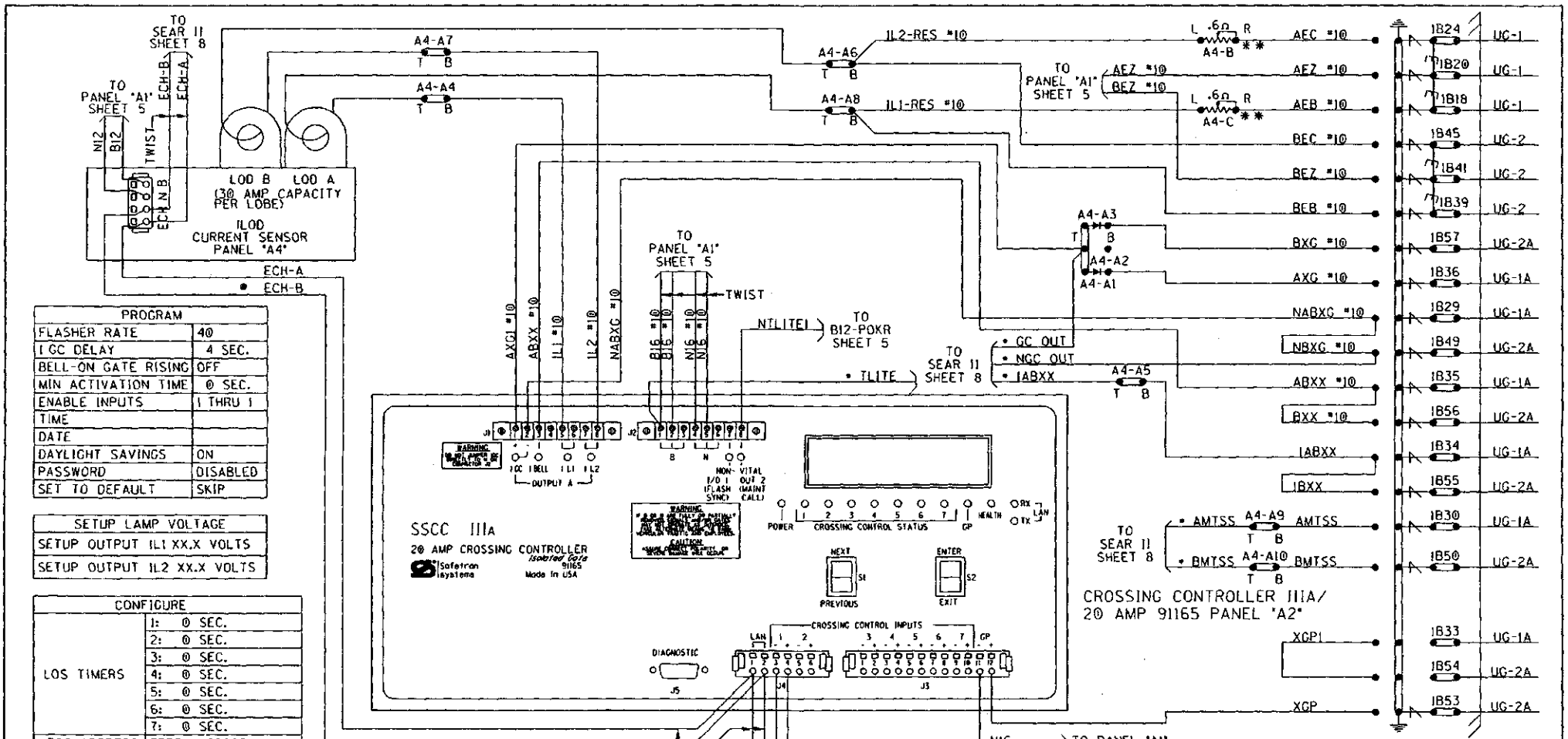

PROGRAM	
FLASHER RATE	40
I GC DELAY	4 SEC.
BELL-ON GATE RISING	OFF
MIN ACTIVATION TIME	0 SEC.
ENABLE INPUTS	1 THRU 1
TIME	
DATE	
DAYLIGHT SAVINGS	ON
PASSWORD	DISABLED
SET TO DEFAULT	SKIP

SETUP LAMP VOLTAGE
SETUP OUTPUT IL1 XX.X VOLTS
SETUP OUTPUT IL2 XX.X VOLTS

CONFIGURE		
LOS TIMERS	1:	0 SEC.
	2:	0 SEC.
	3:	0 SEC.
	4:	0 SEC.
	5:	0 SEC.
	6:	0 SEC.
	7:	0 SEC.
ATCS ADDRESS	7RRRLLLCGG07	
LOW BATTERY	DISABLED	
AUX I/O	NV OUTPUT	

TEST CONFIGURE	
LAMP TEST CANCEL TIMER	5 MIN.
LAMP TEST DELAY TIMER	30 SEC.
LAMP TEST ON TIMER	15 SEC.

NOTES:
ALL WIRING TO BE #16AWG UNLESS NOTED OTHERWISE.

• = CABLE PROVIDED WITH SEAR II

⊳| = DIODE SAFETRAN PN 8A299

* * = RESISTORS TO BE INSTALLED TO LAMPS WITH SHORTEST CABLE RUN

• = ECHELON CONNECTIONS NOT TO EXCEED 53' IN LENGTH AND TOTAL LENGTH NOT TO EXCEED 430' WITH A MAXIMUM OF 8 NODES, RECOMMEND USE BELDEN WIRE CABLE #8461 OR EQUIVALENT.

PANEL "A2" CROSSING CONTROLLER HOOK-UP
PANEL "A4" CURRENT SENSOR HOOK-UP

DESIGNED BY: DBS 12-03-06	NORFOLK SOUTHERN		
DRAWN BY: IRE 12-03-06	OFFICE OF ASS'T. VICE PRESIDENT COMM. & SIGNAL, ATLANTA, GA.	M.P.: CD-295.85	
CHECKED BY: RDO 12-05-06	TOLEDO, OH FLGS AT HOLLAND-SYLVANIA RD.		
IN SERVICE: - -	CHICAGO LINE	FILE No. R-05-1576	
	CADD or DWG. No. 36002958.10	SHEET No. 10 of 19	

REVISION INITIALS											

PROPERTY
PENNSYLVANIA R.R.

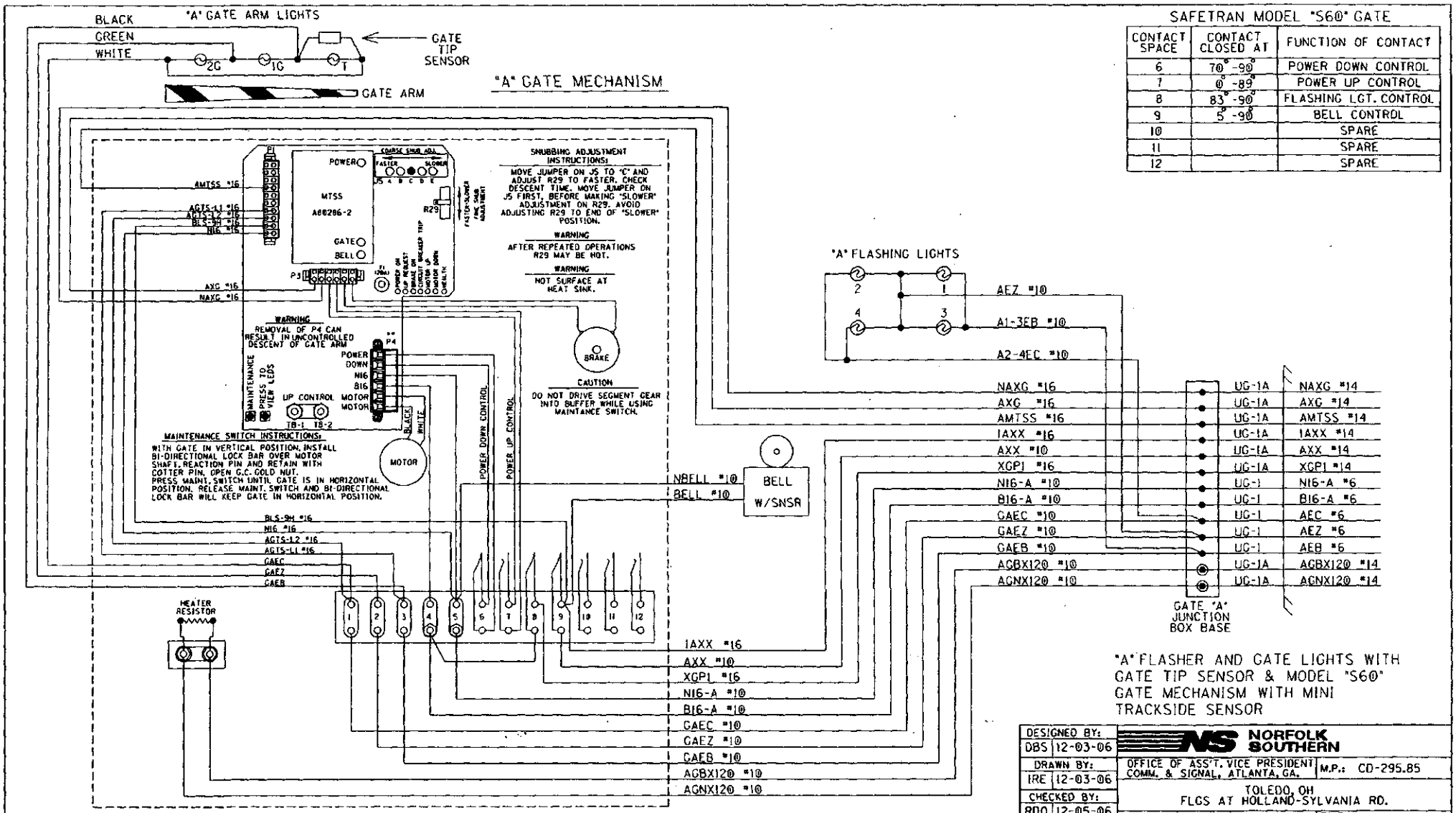

SAFETRAN MODEL "S60" GATE

CONTACT SPACE	CONTACT CLOSED AT	FUNCTION OF CONTACT
6	70° -90°	POWER DOWN CONTROL
7	0° -89°	POWER UP CONTROL
8	83° -90°	FLASHING LGT. CONTROL
9	5° -90°	BELL CONTROL
10		SPARE
11		SPARE
12		SPARE

"A" FLASHER AND GATE LIGHTS WITH GATE TIP SENSOR & MODEL "S60" GATE MECHANISM WITH MINI TRACKSIDE SENSOR

DESIGNED BY: DBS 12-03-06	NORFOLK SOUTHERN	
DRAWN BY: IRE 12-03-06	OFFICE OF ASS'T. VICE PRESIDENT COMM. & SIGNAL, ATLANTA, GA.	M.P.: CD-295.85
CHECKED BY: RDO 12-05-06	TOLEDO, OH FLGS AT HOLLAND-SYLVANIA RD.	
IN SERVICE: - -	CHICAGO LINE	FILE No. R-05-1576
	CADD or DWG. No. 36002958.11	SHEET No. 11 of 19

REVISION INITIALS

PROPERTY PENNSYLVANIA R.R.

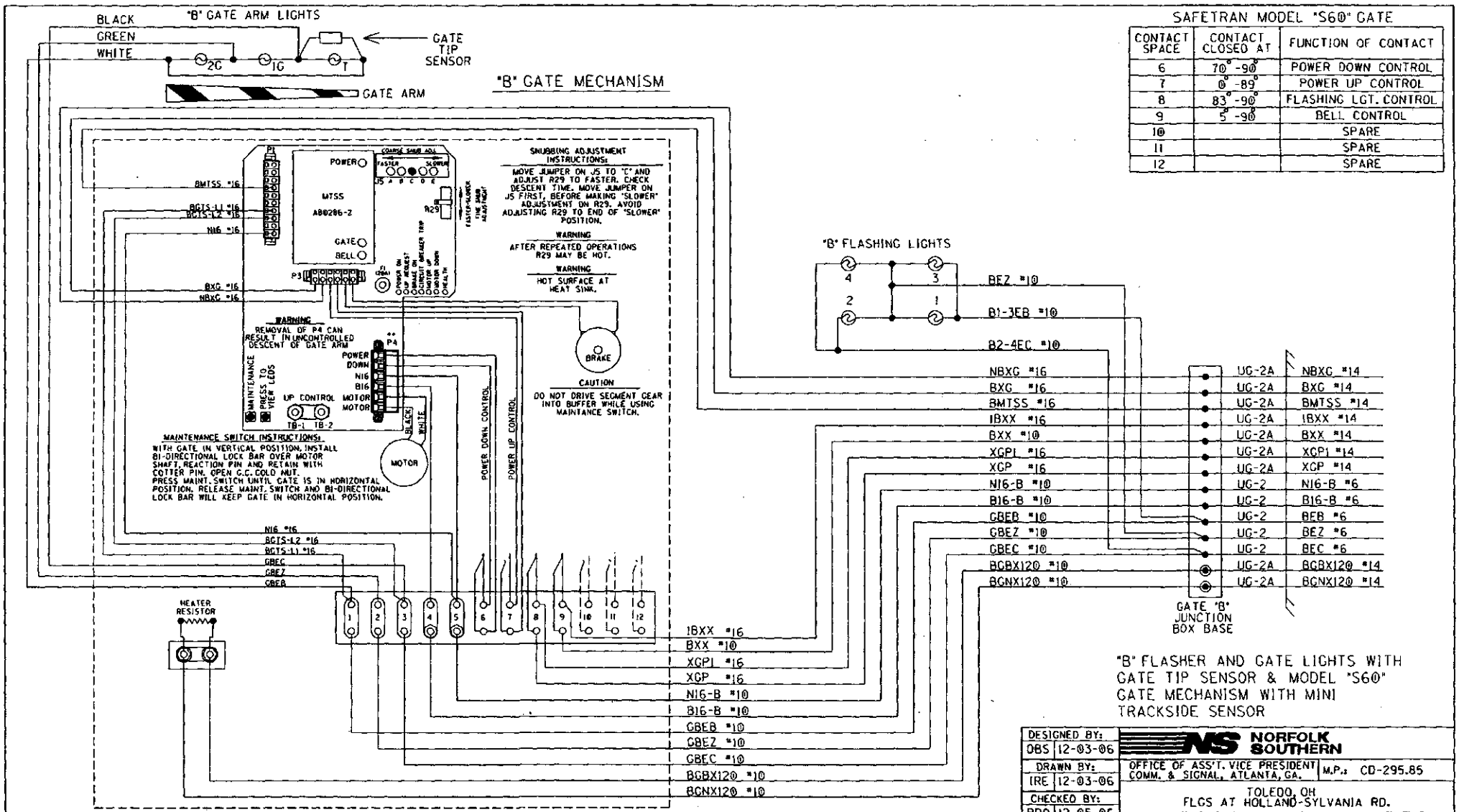

SAFETRAN MODEL "S60" GATE

CONTACT SPACE	CONTACT CLOSED AT	FUNCTION OF CONTACT
6	70°-90°	POWER DOWN CONTROL
7	0°-89°	POWER UP CONTROL
8	83°-90°	FLASHING LGT. CONTROL
9	5°-90°	BELL CONTROL
10		SPARE
11		SPARE
12		SPARE

"B" FLASHER AND GATE LIGHTS WITH GATE TIP SENSOR & MODEL "S60" GATE MECHANISM WITH MINI TRACKSIDE SENSOR

DESIGNED BY: DBS 12-03-06	NORFOLK SOUTHERN		
DRAWN BY: IRE 12-03-06	OFFICE OF ASS'T. VICE PRESIDENT COMM. & SIGNAL, ATLANTA, GA.	M.P.: CD-295.85	
CHECKED BY: RDO 12-05-06	TOLEDO, OH FLGS AT HOLLAND-SYLVANIA RD.		
IN SERVICE: - -	CHICAGO LINE	FILE No. R-05-1576	
	CADD or DWG. No. 36002958.12	SHEET No. 12 of 19	

REVISION INITIALS

PROPERTY PENNSYLVANIA R.R.

LEFT TWO ROWS TERMINAL BOARD 1

"1A" "1B"

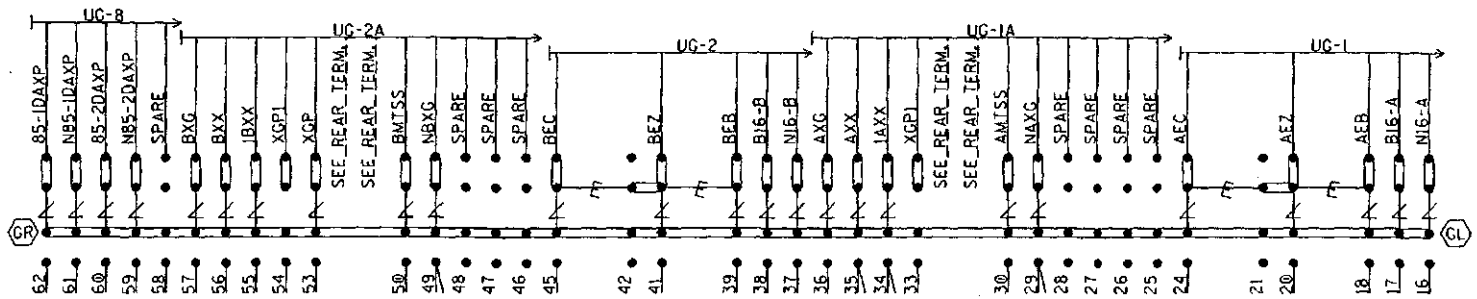

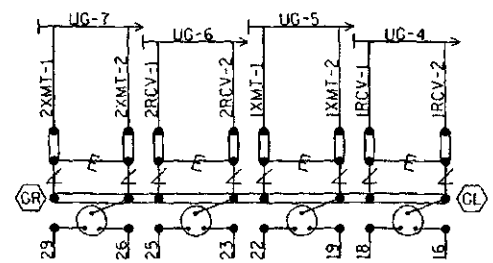

NOTE: INSTALL TEST LINKS ON ALL TRACK WIRES AND ON ALL LOW VOLTAGE UNDERGROUND CABLE TERMINATIONS.

SEE FARADAY SHIELD DETAILS - 1A & 1B FOR HOW THIS PORTION OF THE FARADAY SHIELD IS PREDRILLED. ONLY INSTALL AND USE THE TERMINALS NEEDED.

= Heavy Duty Equalizer (022700-1X)

= Clearview Lightning Arrester (022585-1X)

= LPC-10560-51

GR / GL = TERMINALS GROUNDED TO SHIELD. 4 POST BLOCKS USE EITHER - GR - SERMMI PART NO. 61278 GL - SERMMI PART NO. 61278-1.

BACKBOARD DETAIL - 1A & 1B

DESIGNED BY: DBS 12-03-06	NORFOLK SOUTHERN	
DRAWN BY: IRE 12-03-06	OFFICE OF ASS'T. VICE PRESIDENT COMM. & SIGNAL, ATLANTA, GA.	M.P.: CD-295.85
CHECKED BY: RDO 12-05-06	TOLEDO, OH FLGS AT HOLLAND-SYLVANIA RD.	
IN SERVICE: - -	CHICAGO LINE	FILE No. R-05-1576
	CADD or DWG. No. 36002958.13	SHEET No. 13 of 19

REVISION INITIALS											

PROPERTY PENNSYLVANIA R.R.

REAR VIEW OF LEFT TWO ROWS TERMINAL BOARD 1
"1A"
"1B"

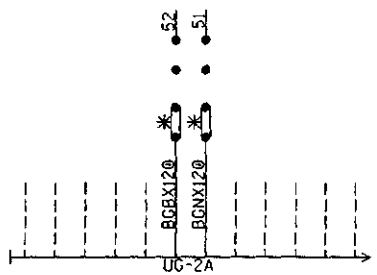

(SEE PREVIOUS SHEET FOR OTHER WIRES IN CABLE)

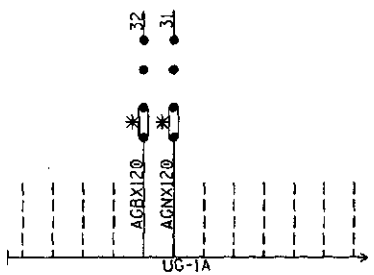

(SEE PREVIOUS SHEET FOR OTHER WIRES IN CABLE)

NOTE: ALL 120VAC AND ABOVE WILL BE WIRED TO THE REAR OF FARADAY BACKBOARD. INSULATED NUTS MUST BE USED ON ALL TERMINALS.

✳ = CLOSED DURING WINTER MONTHS

REAR OF FARADAY BACKBOARD
REAR BACKBOARD DETAIL - 1A & 1B

DESIGNED BY: DBS 12-03-06	NORFOLK SOUTHERN		
DRAWN BY: IRE 12-03-06	OFFICE OF ASS'T. VICE PRESIDENT COMM. & SIGNAL, ATLANTA, GA.	M.P.: CD-295.85	
CHECKED BY: RDO 12-05-06	TOLEDO, OH FLGS AT HOLLAND-SYLVANIA RD.		
IN SERVICE: - -	CHICAGO LINE	FILE No. R-05-1576	
	CADD or DWG. No. 36002958.14	SHEET No. 14 of 19	

REVISION INITIALS												PROPERTY PENNSYLVANIA R.R.

NOTE: IF THE FARADAY SHIELD WOULD EVER NEED TO BE DRILLED IN THE FIELD, PROPER PRECAUTIONS MUST BE TAKEN TO INSURE METAL SHAVINGS DO NOT GET INTO EXISTING TERMINALS/WIRES.

AREA BELOW IS SCALED WITH AS=.75

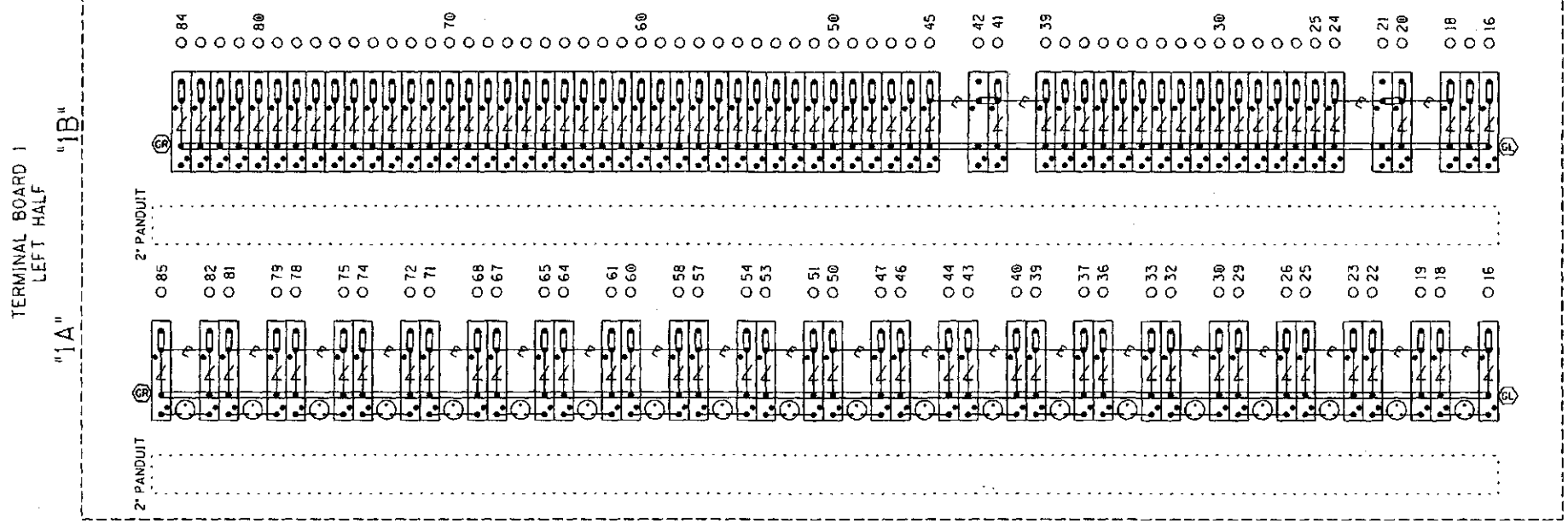

= Heavy Duty Equalizer (022700-1X)

Clearview = Lightning Arrester (022585-1X)

= LPC-10560-51

TERMINAL BOARD 1
LEFT TWO ROWS
FARADAY SHIELD DETAIL - 1A & 1B

= INDICATES PLACEMENT OF PANDUIT

THIS SHEET IS FOR REFERENCE ONLY, TO REFLECT HOW THE FARADAY SHIELD IS PREDRILLED. ONLY INSTALL AND USE THE TERMINALS NEEDED.

GR / GL = TERMINALS GROUNDED TO SHIELD. 4 POST BLOCKS USE EITHER - GR - SERMMI PART NO. 61278 GL - SERMMI PART NO. 61278-1.

DESIGNED BY:	DBS 12-03-06
DRAWN BY:	IRE 12-03-06
CHECKED BY:	RDO 12-05-06
IN SERVICE:	- -

NORFOLK SOUTHERN

OFFICE OF ASS'T. VICE PRESIDENT COMM. & SIGNAL, ATLANTA, GA.

M.P.: CD-295.85

TOLEDO, OH
FLGS AT HOLLAND-SYLVANIA RD.

CHICAGO LINE

FILE No. R-05-1576

CADD or DWG. No. 36002958.15

SHEET No. 15 of 19

REVISION INITIALS

PROPERTY
PENNSYLVANIA R.R.

NOTE: IF THE FARADAY SHIELD WOULD EVER NEED TO BE DRILLED IN THE FIELD, PROPER PRECAUTIONS MUST BE TAKEN TO INSURE METAL SHAVINGS DO NOT GET INTO EXISTING TERMINALS/WIRES.

AREA BELOW IS SCALED WITH AS=.75

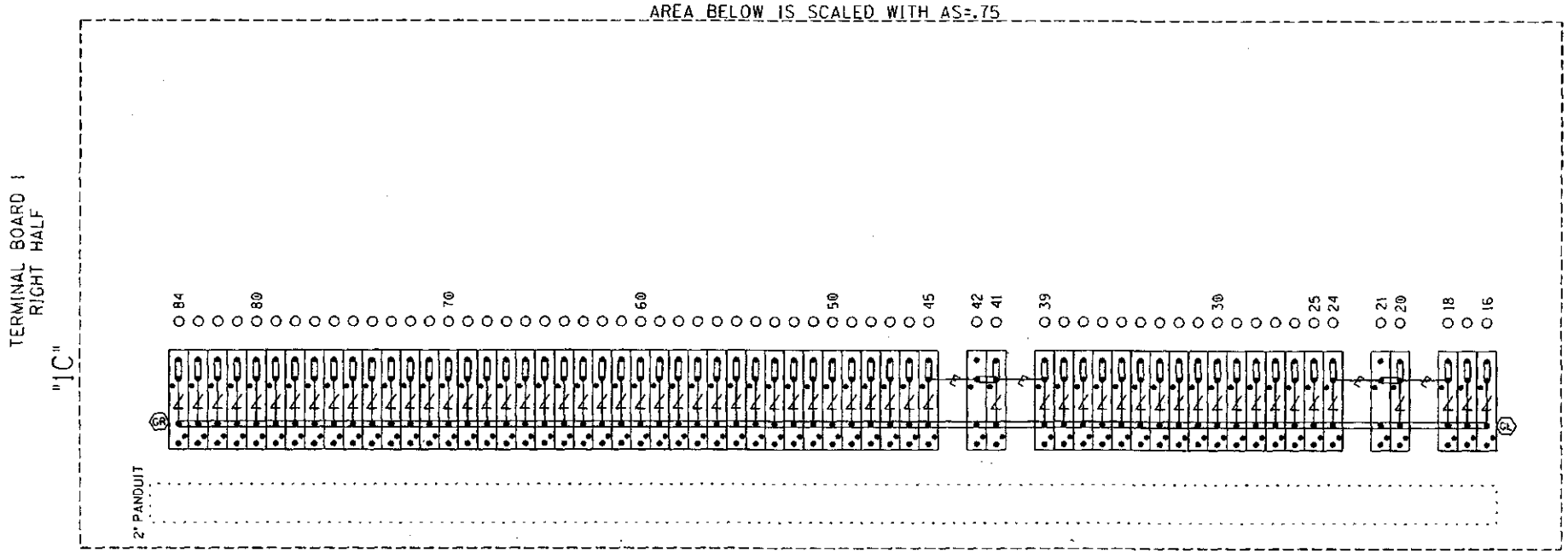

= Heavy Duty Equalizer (022700-1X)

Clearview = Lightning Arrester (022585-1X)

= LPC-10560-51

TERMINAL BOARD 1
RIGHT ROW
FARADAY SHIELD DETAIL - 1C

= INDICATES PLACEMENT OF PANDUIT

THIS SHEET IS FOR REFERENCE ONLY, TO REFLECT HOW THE FARADAY SHIELD IS PREDRILLED. ONLY INSTALL AND USE THE TERMINALS NEEDED.

GR / GL = TERMINALS GROUNDED TO SHIELD. 4 POST BLOCKS USE EITHER - GR - SERMMI PART NO. 61278 GL - SERMMI PART NO. 61278-1.

DESIGNED BY:	DBS 12-03-06
DRAWN BY:	IRE 12-03-06
CHECKED BY:	RDO 12-05-06
IN SERVICE:	- -

NORFOLK SOUTHERN

OFFICE OF ASS'T. VICE PRESIDENT COMM. & SIGNAL, ATLANTA, GA. M.P.: CD-295.85

TOLEDO, OH
FLGS AT HOLLAND-SYLVANIA RD.

CHICAGO LINE FILE No. R-05-1576

CADD or DWG. No. 36002958.16 SHEET No. 16 of 19

REVISION INITIALS

PROPERTY
PENNSYLVANIA R.R.

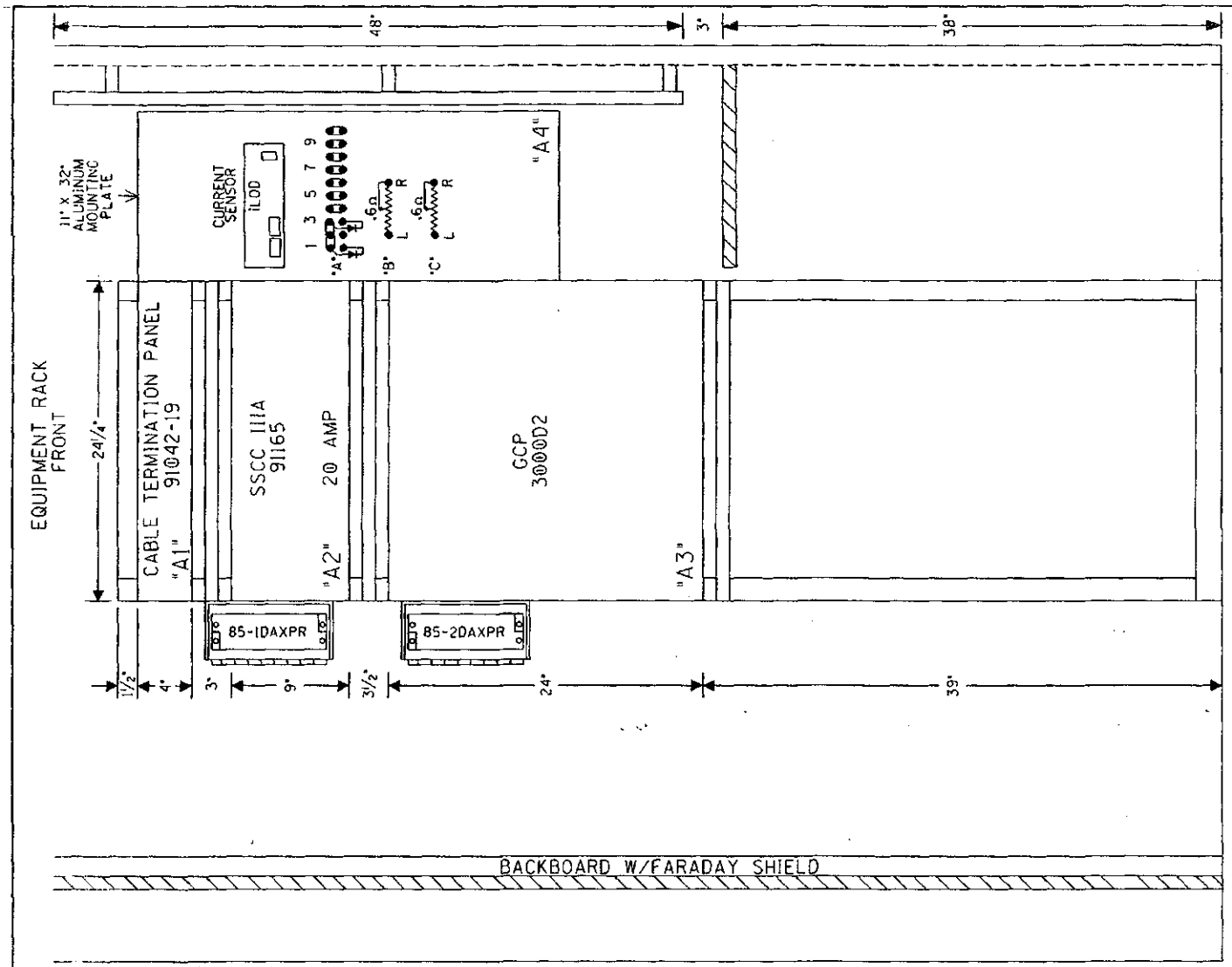

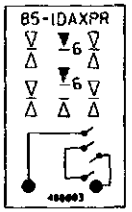

SAFETRAN, ALSTOM(GRS) RELAY CROSS REFERENCE LIST

SAFETRAN		ALSTOM(GRS)
400003	–	A62-308

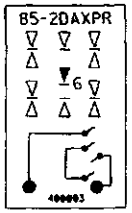

SAFETRAN, ALSTOM(GRS) RELAY CROSS REFERENCE LIST

SAFETRAN		ALSTOM(GRS)
400003	–	A62-308

SIDE "C"

RACK PLACEMENT
6' X 6' HOUSE - SIDE "C"

DESIGNED BY: DBS 12-03-06	NORFOLK SOUTHERN		
DRAWN BY: IRE 12-03-06	OFFICE OF ASS'T. VICE PRESIDENT COMM. & SIGNAL, ATLANTA, GA.	M.P.: CD-295.85	
CHECKED BY: RDO 12-05-06	TOLEDO, OH FLGS AT HOLLAND-SYLVANIA RD.		
IN SERVICE: - -	CHICAGO LINE	FILE No. R-05-1576	
	CADD or DWG. No. 36002958.17	SHEET No. 17 of 19	

REVISION INITIALS													

PROPERTY
PENNSYLVANIA R.R.

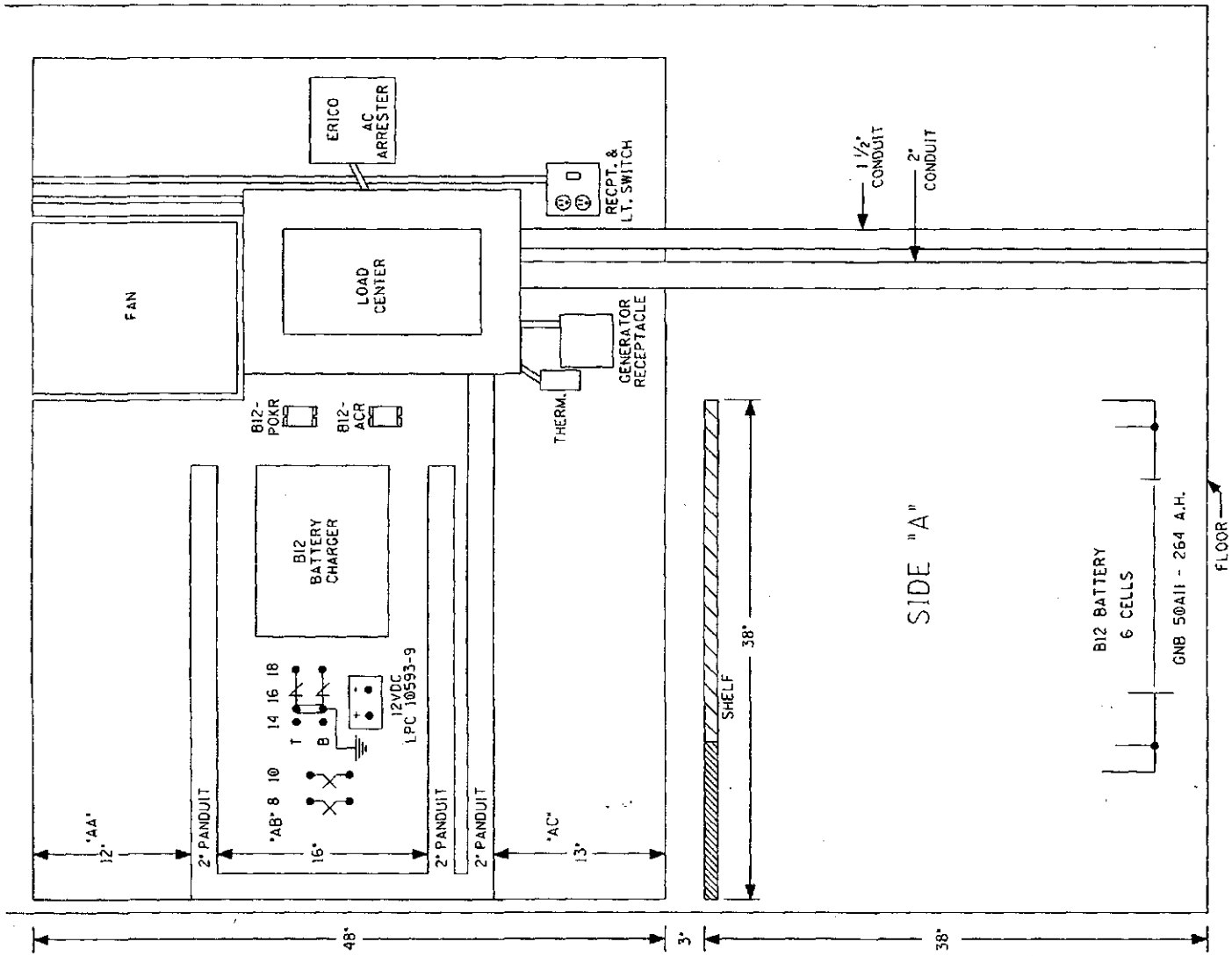

6' X 6' HOUSE - SIDE "A"

DESIGNED BY: DBS 12-03-06	NORFOLK SOUTHERN		
DRAWN BY: IRE 12-03-06	OFFICE OF ASS'T. VICE PRESIDENT COMM. & SIGNAL, ATLANTA, GA.	M.P.: CD-295.85	
CHECKED BY: RDO 12-05-06	TOLEDO, OH FLGS AT HOLLAND-SYLVANIA RD.		
IN SERVICE: - -	CHICAGO LINE	FILE No. R-05-1576	
	CADD or DWG. No. 36002958.18	SHEET No. 18 of 19	

REVISION INITIALS

PROPERTY
PENNSYLVANIA R.R.

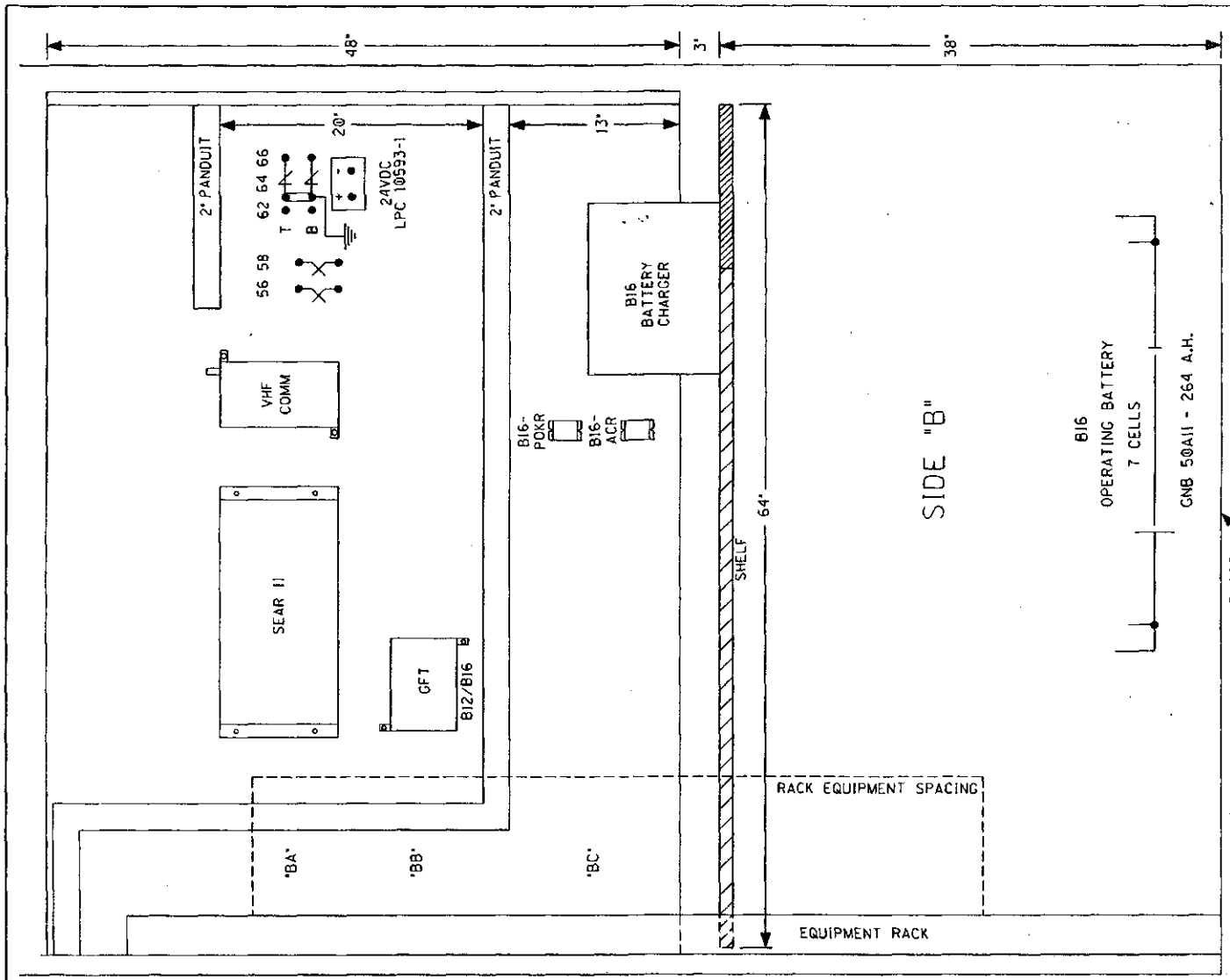

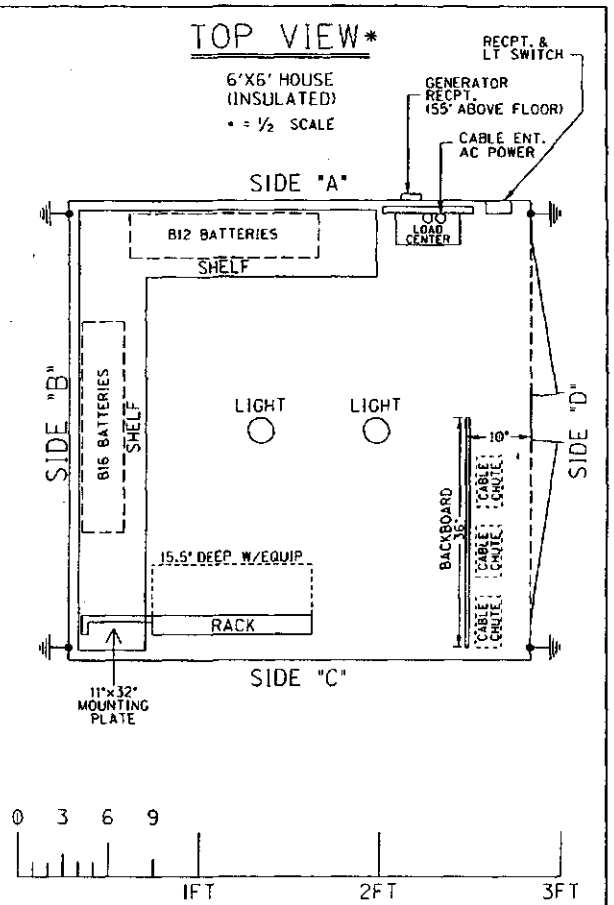

6' X 6' HOUSE (SIDE "B" & TOP VIEW)

DESIGNED BY: DBS 12-03-06	NORFOLK SOUTHERN	
DRAWN BY: IRE 12-03-06	OFFICE OF ASS'T. VICE PRESIDENT COMM. & SIGNAL, ATLANTA, GA.	M.P.: CD-295.85
CHECKED BY: RDO 12-05-06	TOLEDO, OH FLGS AT HOLLAND-SYLVANIA RD.	
IN SERVICE: - -	CHICAGO LINE	FILE No. R-05-1576
	CADD or DWG. No. 36002958.19	SHEET No. 19 of 19

REVISION INITIALS

PROPERTY
PENNSYLVANIA R.R.

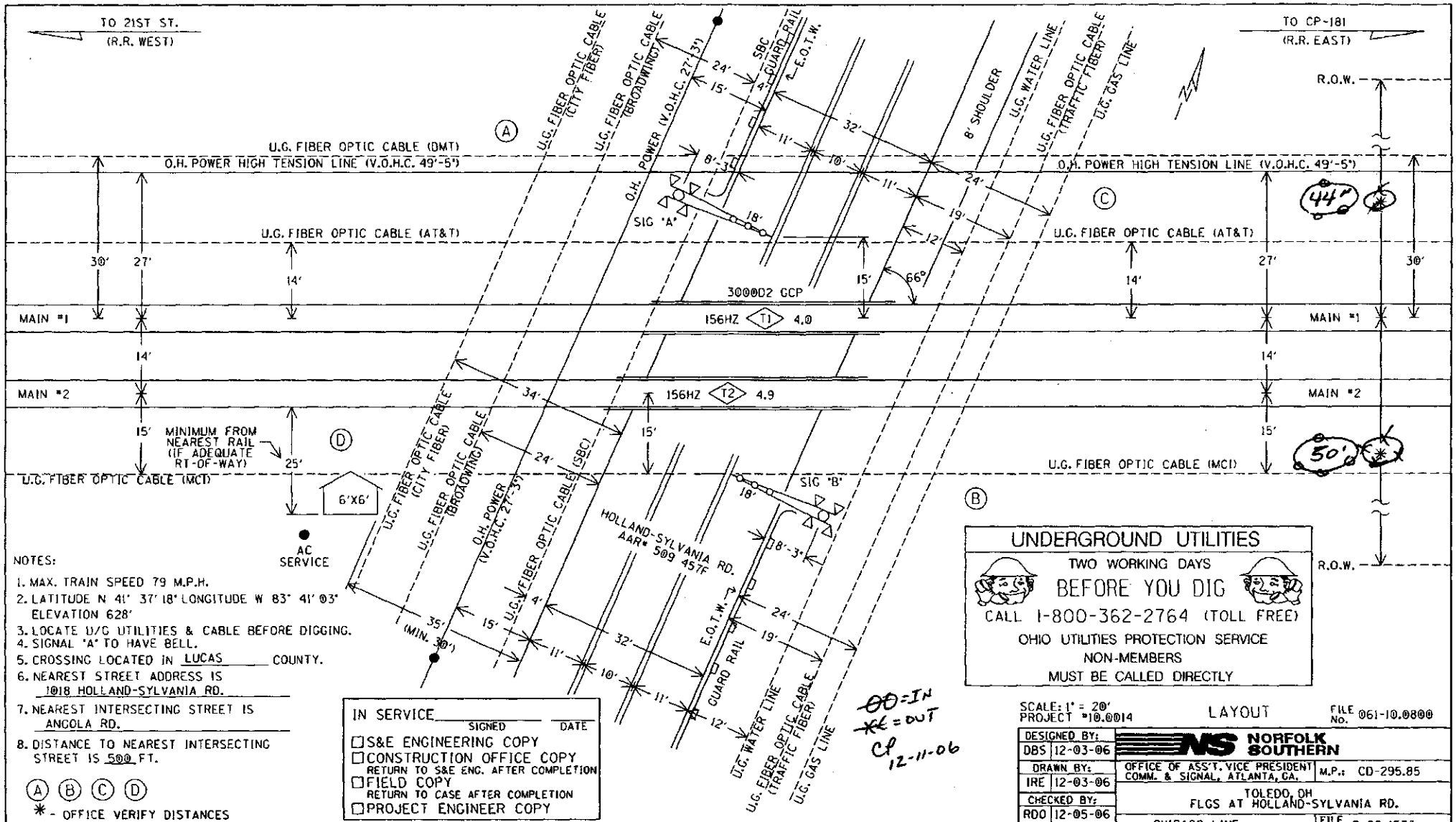

NOTES:

1. MAX. TRAIN SPEED 79 M.P.H.
2. LATITUDE N 41° 37' 18" LONGITUDE W 83° 41' 03" ELEVATION 628'
3. LOCATE U/G UTILITIES & CABLE BEFORE DIGGING.
4. SIGNAL "A" TO HAVE BELL.
5. CROSSING LOCATED IN LUCAS COUNTY.
6. NEAREST STREET ADDRESS IS 1018 HOLLAND-SYLVANIA RD.
7. NEAREST INTERSECTING STREET IS ANGOLA RD.
8. DISTANCE TO NEAREST INTERSECTING STREET IS 500 FT.

(A) (B) (C) (D)

✳ - OFFICE VERIFY DISTANCES

IN SERVICE _____ SIGNED _____ DATE

☐ S&E ENGINEERING COPY
☐ CONSTRUCTION OFFICE COPY
RETURN TO S&E ENG. AFTER COMPLETION
☐ FIELD COPY
RETURN TO CASE AFTER COMPLETION
☐ PROJECT ENGINEER COPY

SCALE: 1" = 20'
PROJECT #10.0014

LAYOUT

FILE No. 061-10.0800

DESIGNED BY: DBS	12-03-06
DRAWN BY: IRE	12-03-06
CHECKED BY: RDO	12-05-06
IN SERVICE:	- -

NORFOLK SOUTHERN

OFFICE OF ASS'T. VICE PRESIDENT COMM. & SIGNAL, ATLANTA, GA.

M.P.: CD-295.85

TOLEDO, OH
FLGS AT HOLLAND-SYLVANIA RD.

CHICAGO LINE

FILE No. R-05-1576

CADD or DWG. No. 36002958.01

SHEET No. 1 of 19

REVISION INITIALS

PROPERTY
PENNSYLVANIA R.R.

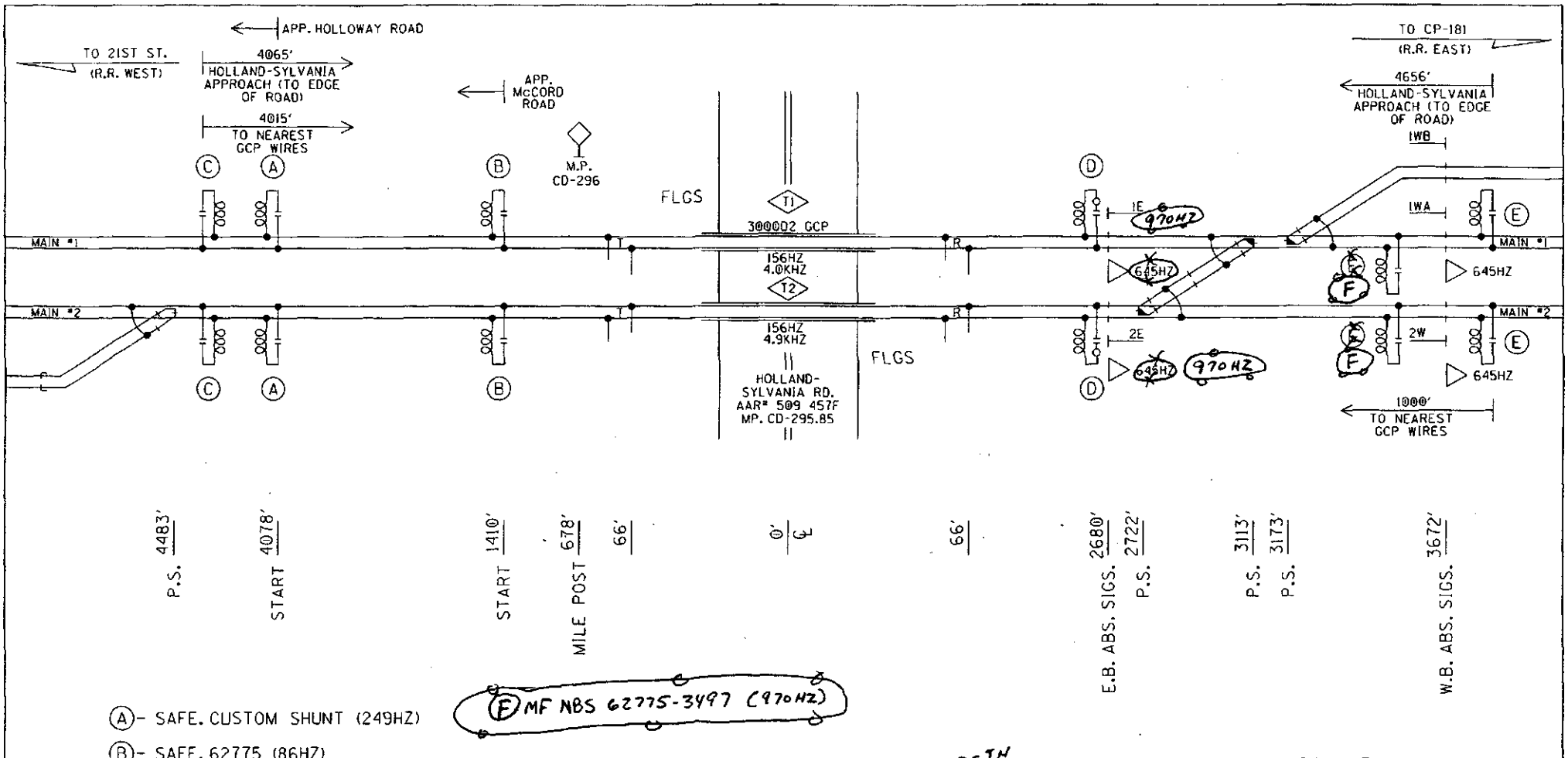

(A)- SAFE. CUSTOM SHUNT (249HZ)

(B)- SAFE. 62775 (86HZ)

(C)- MF NBS 62775-8261 (156HZ)

(D)- MF NBS 62775-8261 (156HZ) WITH SAFETRAN 8V617-1400

(E)- MF NBS 62775-3497 (645HZ)

(F) MF NBS 62775-3497 (970HZ)

~~00~~ = IN
~~XX~~ = OUT
CP
12-11-06

PROFILE

DESIGNED BY: DBS 12-03-06	NORFOLK SOUTHERN	
DRAWN BY: IRE 12-03-06	OFFICE OF ASS'T. VICE PRESIDENT COMM. & SIGNAL, ATLANTA, GA.	M.P.: CD-295.85
CHECKED BY: RDO 12-05-06	TOLEDO, OH FLGS AT HOLLAND-SYLVANIA RD.	
IN SERVICE: - -	CHICAGO LINE	FILE No. R-05-1576
	CADD or DWG. No. 36002958.02	SHEET No. 2 of 19

REVISION INITIALS

PROPERTY
PENNSYLVANIA R.R.

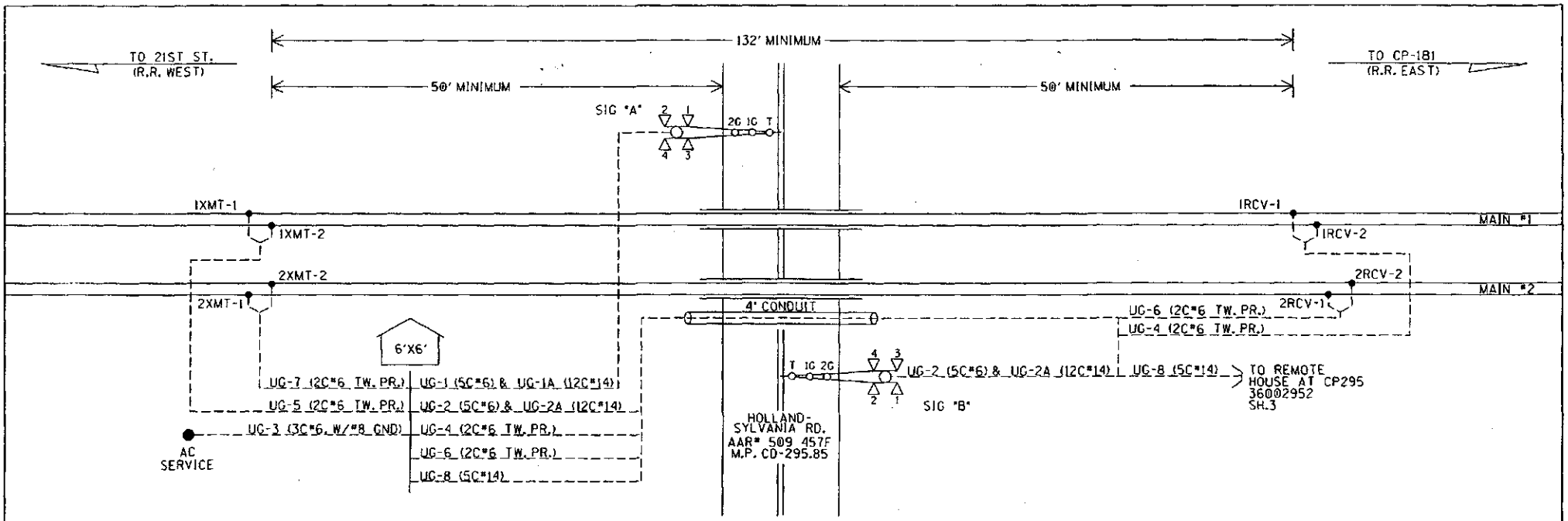

UG-1-5CUG *6
AEC
AEZ
AEB
B16-A
N16-A

UG-2-5CUG *6
BEC
BEZ
BEB
B16-B
N16-B

UG-1A-12CUG *14
AXG
NAXG
AXX
1AXX
XGP1
AGBX120
AGNX120
AMTSS
SPARE
SPARE
SPARE
SPARE

UG-2A-12CUG *14
BXG
NBXG
BXX
1BXX
XGP1
XGP
BGBX120
BGNX120
BMTSS
SPARE
SPARE
SPARE

UG-3-3CUG *6 W/*8 GND
BX120-A
BX120-B
NX120
GND

UG-4-TW. PR. *6
1RCV-1
1RCV-2

UG-5-TW. PR. *6
1XMT-1
1XMT-2

UG-6-TW. PR. *6
2RCV-1
2RCV-2

UG-7-TW. PR. *6
2XMT-1
2XMT-2

UG-8-5CUG*14
85-1DAXP
N85-1DAXP
85-2DAXP
N85-2DAXP
SPARE

CABLE PLAN

DESIGNED BY: DBS 12-03-06	NORFOLK SOUTHERN		
DRAWN BY: IRE 12-03-06	OFFICE OF ASS'T. VICE PRESIDENT COMM. & SIGNAL, ATLANTA, GA.	M.P.: CD-295.85	
CHECKED BY: RDO 12-05-06	TOLEDO, OH FLGS AT HOLLAND-SYLVANIA RD.		
IN SERVICE: - -	CHICAGO LINE	FILE No. R-05-1576	
	CADD or DWG. No. 36002958.03	SHEET No. 3 of 19	

REVISION INITIALS

PROPERTY
PENNSYLVANIA R.R.

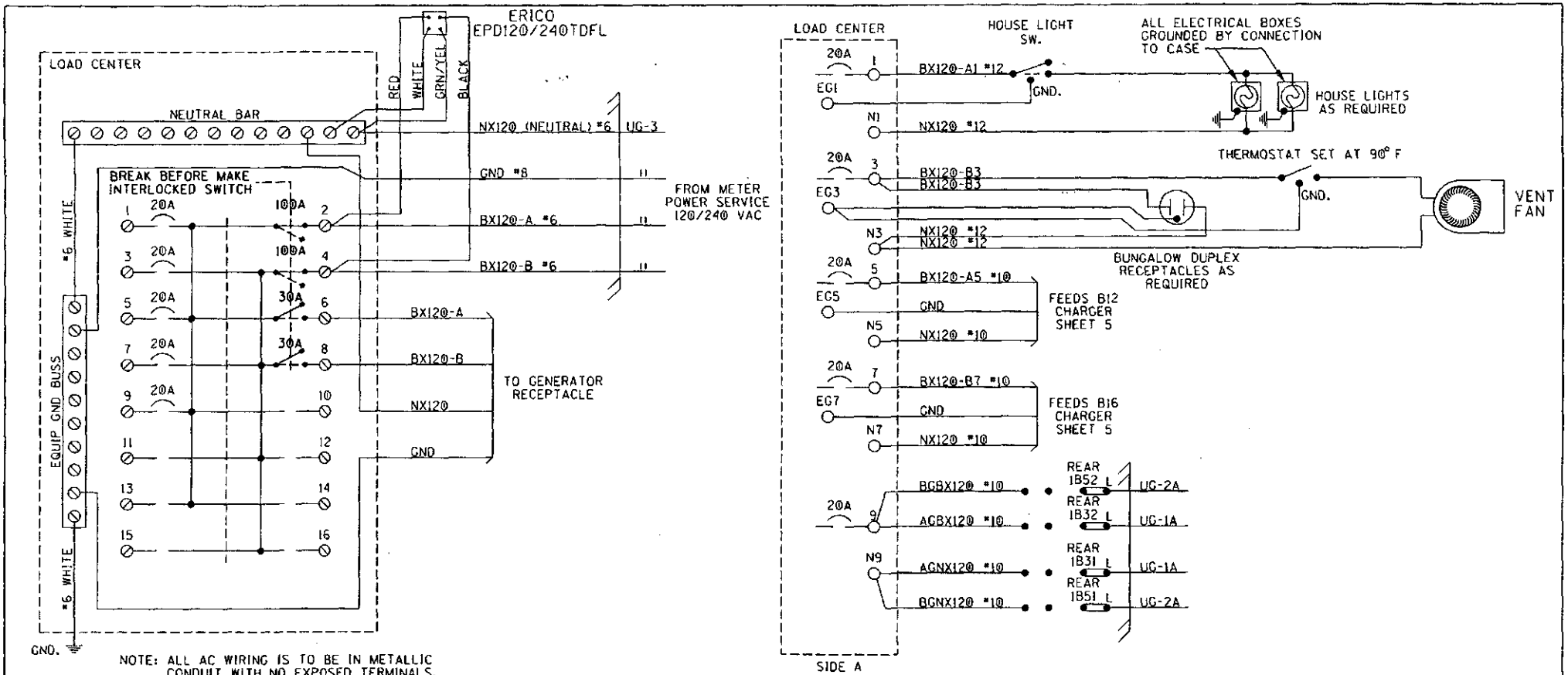

NOTE: ALL AC WIRING IS TO BE IN METALLIC CONDUIT WITH NO EXPOSED TERMINALS. ALL AC 120V AND 240V EQUIPMENT IS TO BE PROPERLY GROUNDED.

SQUARE "D" PART NUMBERS:

LOAD CENTER——QO116L125G
10A 1P CIR BKR——QO110
20A 1P CIR BKR——QO120
30A 1P CIR BKR——QO130
30A 2P CIR BKR——QO230
60A 2P CIR BKR——QO260
100A 2P CIR BKR——QO2100
MECH INTERLOCK——PK4DT1M4LA

GENERATOR RECEPTACLE:
MALE CONNECTOR - NEMA L1430-FI

LOAD CENTER WIRING

DESIGNED BY: DBS 12-03-06	NORFOLK SOUTHERN		
DRAWN BY: IRE 12-03-06	OFFICE OF ASS'T. VICE PRESIDENT COMM. & SIGNAL, ATLANTA, GA.	M.P.: CD-295.85	
CHECKED BY: RDO 12-05-06	TOLEDO, OH FLGS AT HOLLAND-SYLVANIA RD.		
IN SERVICE: - -	CHICAGO LINE	FILE No. R-05-1576	
	CADD or DWG. No. 36002958.04	SHEET No. 4 of 19	

REVISION INITIALS

PROPERTY
PENNSYLVANIA R.R.

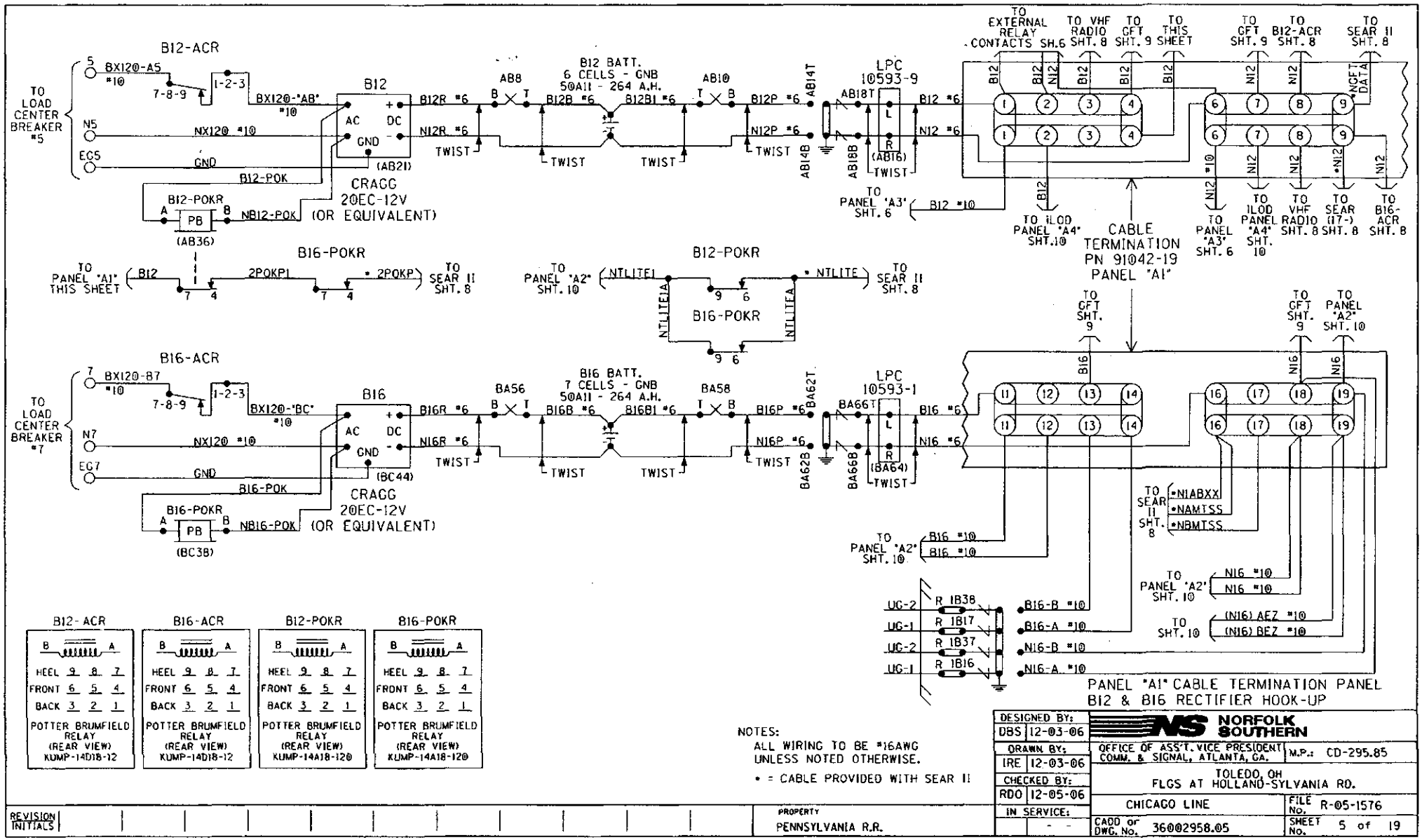
B12-ACR
TO LOAD CENTER BREAKER #5
5
BX120-A5 #10
7-8-9
1-2-3
BX120-"AB" #10
N5
NX120 #10
EG5
GND
B12-POK
B12
AC
DC
GND
(AB21)
CRAGG 20EC-12V (OR EQUIVALENT)
B12-POKR
A
PB
B
NB12-POK
(AB36)
B12R #6
N12R #6
TWIST
AB8
B
T
B12 BATT. 6 CELLS - GNB 50A11 - 264 A.H.
B12B #6
B12B1 #6
AB10
B12P #6
N12P #6
AB14T
AB14B
LPC 10593-9
AB18T
AB18B
L
R
(AB16)
B12 #6
N12 #6
TO PANEL "A3" SHT. 6
B12 #10
TO EXTERNAL RELAY CONTACTS SH.6
TO VHF RADIO SHT. 8
TO GFT SHT. 9
TO THIS SHEET
TO GFT SHT. 9
TO B12-ACR SHT. 8
TO SEAR II SHT. 8
*NGFT DATA
TO ILOD PANEL "A4" SHT.10
CABLE TERMINATION PN 91042-19 PANEL "A1"
TO PANEL "A3" SHT. 6
TO ILOD PANEL "A4" SHT. 10
TO VHF RADIO SHT. 8
TO SEAR (17-) SHT. 8
TO B16-ACR SHT. 8
TO PANEL "A1" THIS SHEET
B12
2POKP1
* 2POKP
TO SEAR II SHT. 8
B16-POKR
TO PANEL "A2" SHT. 10
NTLITE1
NTLITE1A
NTLITE
NTLITEA
B16-POKR
TO SEAR II SHT. 8
B16-ACR
TO LOAD CENTER BREAKER #7
7
BX120-B7 #10
7-8-9
1-2-3
BX120-"BC" #10
N7
NX120 #10
EG7
GND
B16-POK
B16
AC
DC
GND
(BC44)
CRAGG 20EC-12V (OR EQUIVALENT)
B16-POKR
A
PB
B
NB16-POK
(BC38)
B16R #6
N16R #6
TWIST
BA56
B16 BATT. 7 CELLS - GNB 50A11 - 264 A.H.
B16B #6
B16B1 #6
BA58
B16P #6
N16P #6
BA62T
BA62B
LPC 10593-1
BA66T
BA66B
L
R
(BA64)
B16 #6
N16 #6
TO GFT SHT. 9
TO GFT SHT. 9
TO PANEL "A2" SHT. 10
B16
N16
TO SEAR II SHT. 8
*N1ABXX
*NAMISS
*NBMISS
TO PANEL "A2" SHT. 10
B16 #10
B16 #10
TO PANEL "A2" SHT. 10
N16 #10
N16 #10
TO SHT. 10
(N16) AEZ #10
(N16) BEZ #10
UG-2
UG-1
UG-2
UG-1
R 1B38
R 1B17
R 1B37
R 1B16
B16-B #10
B16-A #10
N16-B #10
N16-A #10
PANEL "A1" CABLE TERMINATION PANEL
B12 & B16 RECTIFIER HOOK-UP
B12-ACR
B16-ACR
B12-POKR
B16-POKR
HEEL 9 8 7
FRONT 6 5 4
BACK 3 2 1
POTTER BRUMFIELD RELAY (REAR VIEW) KUMP-14D18-12
POTTER BRUMFIELD RELAY (REAR VIEW) KUMP-14D18-12
POTTER BRUMFIELD RELAY (REAR VIEW) KUMP-14A18-120
POTTER BRUMFIELD RELAY (REAR VIEW) KUMP-14A18-120
NOTES:
ALL WIRING TO BE #16AWG UNLESS NOTED OTHERWISE.
* = CABLE PROVIDED WITH SEAR II
DESIGNED BY: DBS 12-03-06
DRAWN BY: IRE 12-03-06
CHECKED BY: RDO 12-05-06
IN SERVICE:
NORFOLK SOUTHERN
OFFICE OF ASS'T. VICE PRESIDENT COMM. & SIGNAL, ATLANTA, GA.
M.P.: CD-295.85
TOLEDO, OH
FLGS AT HOLLAND-SYLVANIA RD.
CHICAGO LINE
FILE No. R-05-1576
CADD or DWG. No. 36002958.05
SHEET No. 5 of 19
REVISION INITIALS
PROPERTY
PENNSYLVANIA R.R.

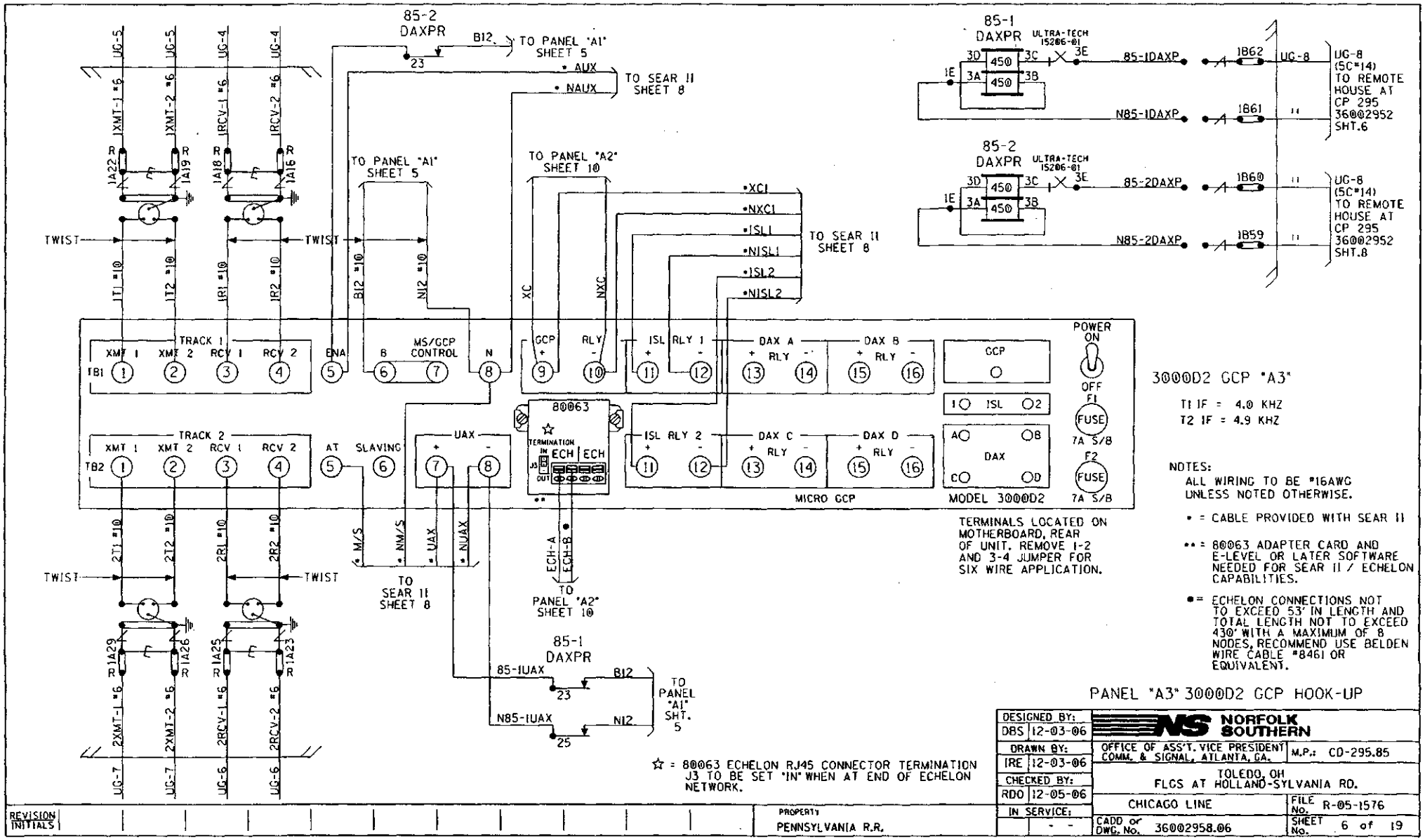
85-2 DAXPR
B12
TO PANEL "A1" SHEET 5
• AUX
• NAUX
TO SEAR II SHEET 8
85-1 DAXPR
ULTRA-TECH 15206-01
85-1DAXP
N85-1DAXP
1B62
1B61
UG-8
UG-8 (5C*14) TO REMOTE HOUSE AT CP 295 36002952 SHT.6
85-2 DAXPR
ULTRA-TECH 15206-01
85-2DAXP
N85-2DAXP
1B60
1B59
UG-8 (5C*14) TO REMOTE HOUSE AT CP 295 36002952 SHT.8
UG-5
UG-4
XMT-1 #6
XMT-2 #6
RCV-1 #6
RCV-2 #6
1A22
1A19
1A18
1A16
TWIST
1T1 #10
1T2 #10
1R1 #10
1R2 #10
TO PANEL "A1" SHEET 5
B12 #10
N12 #10
TO PANEL "A2" SHEET 10
XC
NXC
•XC1
•NXC1
•ISL1
•NISL1
•ISL2
•NISL2
TO SEAR II SHEET 8
TRACK 1
XMT 1
XMT 2
RCV 1
RCV 2
TB1
ENA
B
MS/GCP CONTROL
N
GCP
RLY
ISL RLY 1
DAX A
DAX B
80063
TERMINATION
IN
ECH
OUT
TRACK 2
TB2
AT
SLAVING
UAX
ISL RLY 2
DAX C
DAX D
MICRO GCP
GCP
ISL
DAX
MODEL 3000D2
POWER ON
OFF
F1
FUSE
7A S/B
F2
3000D2 GCP "A3"
T1 IF = 4.0 KHZ
T2 IF = 4.9 KHZ
NOTES:
ALL WIRING TO BE #16AWG UNLESS NOTED OTHERWISE.
• = CABLE PROVIDED WITH SEAR II
•• = 80063 ADAPTER CARD AND E-LEVEL OR LATER SOFTWARE NEEDED FOR SEAR II / ECHELON CAPABILITIES.
• = ECHELON CONNECTIONS NOT TO EXCEED 53' IN LENGTH AND TOTAL LENGTH NOT TO EXCEED 430' WITH A MAXIMUM OF 8 NODES, RECOMMEND USE BELDEN WIRE CABLE #8461 OR EQUIVALENT.
TERMINALS LOCATED ON MOTHERBOARD, REAR OF UNIT. REMOVE 1-2 AND 3-4 JUMPER FOR SIX WIRE APPLICATION.
• M/S
• NM/S
• UAX
• NUAX
TO SEAR II SHEET 8
ECH-A
ECH-B
TO PANEL "A2" SHEET 10
2T1 #10
2T2 #10
2R1 #10
2R2 #10
1A29
1A26
1A25
1A23
2XMT-1 #6
2XMT-2 #6
2RCV-1 #6
2RCV-2 #6
UG-7
UG-6
85-1 DAXPR
85-1UAX
N85-1UAX
B12
N12
TO PANEL "A1" SHT. 5
☆ = 80063 ECHELON RJ45 CONNECTOR TERMINATION J3 TO BE SET "IN" WHEN AT END OF ECHELON NETWORK.
PANEL "A3" 3000D2 GCP HOOK-UP
DESIGNED BY: DBS 12-03-06
DRAWN BY: IRE 12-03-06
CHECKED BY: RDO 12-05-06
IN SERVICE:
NORFOLK SOUTHERN
OFFICE OF ASS'T. VICE PRESIDENT COMM. & SIGNAL, ATLANTA, GA.
M.P.: CD-295.85
TOLEDO, OH
FLCS AT HOLLAND-SYLVANIA RD.
CHICAGO LINE
FILE No. R-05-1576
CADD or DWG. No. 36002958.06
SHEET No. 6 of 19
REVISION INITIALS
PROPERTY
PENNSYLVANIA R.R.

3000D2 PROGRAMMING CHART	(LEVEL: J)
NUMBER OF TRACK TRANSCEIVERS	2
T1: FREQUENCY	156Hz
T2: FREQUENCY	156Hz
T1: UNIDIRECTIONAL/BIDIRECTIONAL	BI
T2: UNIDIRECTIONAL/BIDIRECTIONAL	BI
T1: XMIT LEVEL (MAX/MED)	MED
T2: XMIT LEVEL (MAX/MED)	MED
T1: PREDICTOR/MOTION SENSOR	PRED
T2: PREDICTOR/MOTION SENSOR	PRED
T1: WARNING TIME	30 Sec
T2: WARNING TIME	30 Sec
T1: APPROACH DISTANCE	4015 Ft
T2: APPROACH DISTANCE	4015 Ft
UAX1 PICKUP DELAY (UAX) (0 = OFF)	15 Sec
ENA/UAX2 DELAY (0 = ENA)	15 Sec
T1: ISLAND DISTANCE	132 Ft
T2: ISLAND DISTANCE	132 Ft
NUMBER OF DAX'S	0 Ea
DAX A TRACK ASSIGNMENT (T1/T2)	---
DAX A DISTANCE (0 = PREEMPT)	Ft
DAX A WARNING TIME	Sec
DAX B TRACK ASSIGNMENT (T1/T2)	---
DAX B DISTANCE (0 = PREEMPT)	Ft
DAX B WARNING TIME	Sec
DAX C TRACK ASSIGNMENT (T1/T2)	---
DAX C DISTANCE (0 = PREEMPT)	Ft
DAX C WARNING TIME	Sec
DAX D TRACK ASSIGNMENT (T1/T2)	---
DAX D DISTANCE (0 = PREEMPT)	Ft
DAX D WARNING TIME	Sec
SLAVING (MASTER/SLAVE)	MASTER
PASSWORD ENABLED	NO
RECORDER INSTALLED	NO

EXPANDED PROGRAMMING

T1: SWITCH TO MS (ENTER EZ VALUE)	10 %	
T2: SWITCH TO MS (ENTER EZ VALUE)	10 %	
T1: TRANSFER DELAY MS TO GCP (0 = OFF)	0 Sec	
T2: TRANSFER DELAY MS TO GCP (0 = OFF)	0 Sec	
T1: TRANSFER MS TO GCP PRIME (ON/OFF)	---	(1)
T2: TRANSFER MS TO GCP PRIME (ON/OFF)	---	(1)
T1: TRANSFER MS TO GCP DAX A (ON/OFF)	---	(2)
T2: TRANSFER MS TO GCP DAX A (ON/OFF)	---	(2)
T1: TRANSFER MS TO GCP DAX B (ON/OFF)	---	(2)
T2: TRANSFER MS TO GCP DAX B (ON/OFF)	---	(2)
T1: TRANSFER MS TO GCP DAX C (ON/OFF)	---	(2)
T2: TRANSFER MS TO GCP DAX C (ON/OFF)	---	(2)
T1: TRANSFER MS TO GCP DAX D (ON/OFF)	---	(2)
T2: TRANSFER MS TO GCP DAX D (ON/OFF)	---	(2)
T1: PRIME PREDICTION OFFSET (0 = OFF)	0 Ft	
T2: PRIME PREDICTION OFFSET (0 = OFF)	0 Ft	
PICKUP DELAY PRIME	15 Sec	
PICKUP DELAY DAX A	-- Sec	
PICKUP DELAY DAX B	-- Sec	
PICKUP DELAY DAX C	-- Sec	
PICKUP DELAY DAX D	-- Sec	
T1: ENHANCED DETECTION (ON/OFF)	OFF	
T2: ENHANCED DETECTION (ON/OFF)	OFF	
BACK-TO-BACK T1 AND T2 (NO/YES)	---	(3)
T1: STATION STOP TIMER	10 Sec	(3)
T2: STATION STOP TIMER	10 Sec	(3)
T1: NUMBER OF TRACK WIRES (4/6)	4	
T2: NUMBER OF TRACK WIRES (4/6)	4	
T1: LOW EX ADJUSTMENT	0	
T2: LOW EX ADJUSTMENT	0	
T1: LOW EZ DETECTION	OFF	
T2: LOW EZ DETECTION	OFF	
T1: LOW EZ DETECTION TIMER (ON/OFF)	10 Min	(4)
T2: LOW EZ DETECTION TIMER (ON/OFF)	10 Min	(4)
T1: POSITIVE START (EZ LEVEL) (0 = OFF)	0	
T2: POSITIVE START (EZ LEVEL) (0 = OFF)	0	
T1: POSITIVE START TIMEOUT (0 = NONE)	-- Min	(5)
T2: POSITIVE START TIMEOUT (0 = NONE)	-- Min	(5)
SET AT OPERATION (NORMAL/DIAGNOSTIC)	NORMAL	
DIAGNOSTIC MESSAGES (ON/OFF)	ON	
DAX MESSAGES (ON/OFF)	ON	
ADVANCE PREEMPT TIMER (0 = OFF)	0	
T1: MOTION SENSING LEVEL (0 = NORMAL)	0 %	
T2: MOTION SENSING LEVEL (0 = NORMAL)	0 %	

3000D2 PROGRAMMING NOTES:

1) AVAILALBE WHEN "TRANSFER DELAY MS TO GCP" AND "PRIME PREDICTION OFFSET" IS ON
2) AVAILABLE WHEN "TRANSFER DELAY MS TO GCP" AND DAX DISTANCE IS GREATER THAN ZERO
3) AVAILABLE WHEN "ENHANCED DETECTION" IS ON
4) AVAILABLE WHEN "LOW EZ DETECTION" IS ON
5) AVAILABLE WHEN "POSITIVE START" IS ON

* = 1ST SLOT AT LEFT END OF BAY

MODEL 3000D2 GCP MODULE ASSEMBLIES

	UPPER BAY										LOWER BAY										
MODULES POSITION	M1	M2	M3	M4	M5	M6	M7	M8	M9	M10	M11	M12	M13	M14	M15	M16	M17	M18	M19	M20	M21
MODULE NUMBERS	80211-f(1) 4.0 ISL	80211-f(2) 4.9 ISL	80012 T/R 1	80012 T/R 2	80013 RLY DRV	80214 PROCS	80255 REC-INTF	80016 (1) DAX	80016 (2)DAX	80020 +80017	80211-f(1) 4.0 ISL	80211-f(2) 4.9 ISL	80012 T/R 1	80012 T/R 2	80013 RLY DRV	80214 PROCS	80255 REC-INTF	80016 (1) DAX	80016 (2)DAX	80020 +80017	80028 XFRTMR
MODULES USED	X	X	X	X	X	X	X			X	X	X	X	X	X	X	X			X	X
							**										**				

NOTES:

1 - SEE IPI INSTRUCTION AND INSTALLATION MANUAL FOR 80211 ISLAND CALIBRATION PROCEDURE.

2 - TOGGLE SWITCH ON MOTHER BOARD:
UP = DUAL FREQ.
DOWN = SINGLE FREQ.

** = 80214 & 80255 (WITH JUMPER) CARDS AND E-LEVEL OR LATER SOFTWARE NEEDED FOR SEAR II / ECHELON CAPABILITIES.

PANEL "A3" 3000D2 GCP SET-UP

DESIGNED BY: DBS 12-03-06	NORFOLK SOUTHERN		
DRAWN BY: IRE 12-03-06	OFFICE OF ASS'T. VICE PRESIDENT COMM. & SIGNAL, ATLANTA, GA.	M.P.: CD-295.85	
CHECKED BY: RDO 12-05-06	TOLEDO, OH FLGS AT HOLLAND-SYLVANIA RD.		
IN SERVICE: - -	CHICAGO LINE	FILE No. R-05-1576	
	CADD or DWG. No. 36002958.07	SHEET No. 7 of 19	

REVISION INITIALS

PROPERTY PENNSYLVANIA R.R.

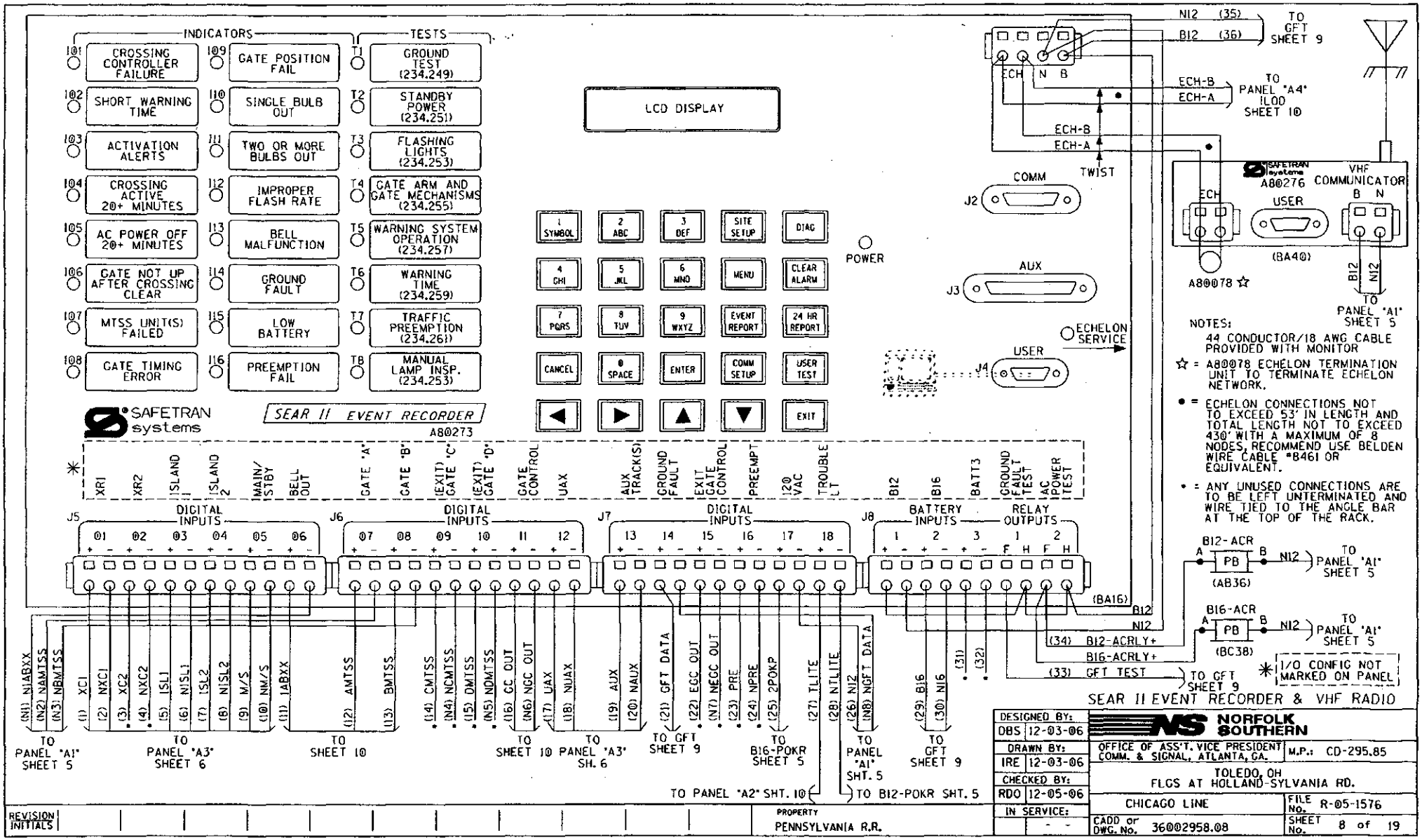
INDICATORS
TESTS
101 CROSSING CONTROLLER FAILURE
102 SHORT WARNING TIME
103 ACTIVATION ALERTS
104 CROSSING ACTIVE 20+ MINUTES
105 AC POWER OFF 20+ MINUTES
106 GATE NOT UP AFTER CROSSING CLEAR
107 MTSS UNIT(S) FAILED
108 GATE TIMING ERROR
109 GATE POSITION FAIL
110 SINGLE BULB OUT
111 TWO OR MORE BULBS OUT
112 IMPROPER FLASH RATE
113 BELL MALFUNCTION
114 GROUND FAULT
115 LOW BATTERY
116 PREEMPTION FAIL
T1 GROUND TEST (234.249)
T2 STANDBY POWER (234.251)
T3 FLASHING LIGHTS (234.253)
T4 GATE ARM AND GATE MECHANISMS (234.255)
T5 WARNING SYSTEM OPERATION (234.257)
T6 WARNING TIME (234.259)
T7 TRAFFIC PREEMPTION (234.261)
T8 MANUAL LAMP INSP. (234.253)
LCD DISPLAY
1 SYMBOL
2 ABC
3 DEF
SITE SETUP
DIAG
4 GHI
5 JKL
6 MNO
MENU
CLEAR ALARM
7 PQRS
8 TUV
9 WXYZ
EVENT REPORT
24 HR REPORT
CANCEL
0 SPACE
ENTER
COMM SETUP
USER TEST
EXIT
POWER
SAFETRAN systems
SEAR II EVENT RECORDER
A80273
XR1
XR2
ISLAND 1
ISLAND 2
MAIN/STBY
BELL OUT
GATE "A"
GATE "B"
(EXIT) GATE "C"
(EXIT) GATE "D"
GATE CONTROL
UAX
AUX TRACK(S)
GROUND FAULT
EXIT GATE CONTROL
PREEMPT
120 VAC
TROUBLE LT
BI2
BI6
BATT3
GROUND FAULT TEST
AC POWER TEST
J5 DIGITAL INPUTS 01 02 03 04 05 06
J6 DIGITAL INPUTS 07 08 09 10 11 12
J7 DIGITAL INPUTS 13 14 15 16 17 18
J8 BATTERY INPUTS 1 2 3 RELAY OUTPUTS 1 2
F H F H
(BA16)
(N1) NIABXX
(N2) NAMTSS
(N3) NBMTSS
(1) XCI
(2) NXCI
(3) XC2
(4) NXC2
(5) ISLI
(6) NISLI
(7) ISL2
(8) NISL2
(9) M/S
(10) NM/S
(11) IABXX
(12) AMTSS
(13) BMTSS
(14) CMTSS
(N4) NCMTSS
(15) DMTSS
(N5) NDMTSS
(16) CC OUT
(N6) NCC OUT
(17) UAX
(18) NUAX
(19) AUX
(20) NAUX
(21) GFT DATA
(22) ECC OUT
(N7) NECC OUT
(23) PRE
(24) NPRE
(25) 2POKP
(27) TLITE
(28) NTLITE
(26) NI2
(N8) NGFT DATA
(29) BI6
(30) NI6
(31)
(32)
TO PANEL "A1" SHEET 5
TO PANEL "A3" SHEET 6
TO SHEET 10
TO SHEET 10 PANEL "A3" SH. 6
TO GFT SHEET 9
TO BI6-POKR SHEET 5
TO PANEL "A1" SHT. 5
TO PANEL "A2" SHT. 10
TO BI2-POKR SHT. 5
NI2 (35)
BI2 (36)
TO GFT SHEET 9
ECH N B
ECH-B
ECH-A
TO PANEL "A4" ILOD SHEET 10
TWIST
COMM
J2
AUX
J3
USER
J4
ECHELON SERVICE
SAFETRAN systems
A80276
VHF COMMUNICATOR
ECH
USER
B N
(BA40)
A80078 ☆
BI2
NI2
TO PANEL "A1" SHEET 5
NOTES:
44 CONDUCTOR/18 AWG CABLE PROVIDED WITH MONITOR
☆ = A80078 ECHELON TERMINATION UNIT TO TERMINATE ECHELON NETWORK.
• = ECHELON CONNECTIONS NOT TO EXCEED 53' IN LENGTH AND TOTAL LENGTH NOT TO EXCEED 430' WITH A MAXIMUM OF 8 NODES, RECOMMEND USE BELDEN WIRE CABLE #8461 OR EQUIVALENT.
• = ANY UNUSED CONNECTIONS ARE TO BE LEFT UNTERMINATED AND WIRE TIED TO THE ANGLE BAR AT THE TOP OF THE RACK.
BI2-ACR
A PB B
(AB36)
NI2
TO PANEL "A1" SHEET 5
BI6-ACR
A PB B
(BC38)
NI2
TO PANEL "A1" SHEET 5
(34) BI2-ACRLY+
BI6-ACRLY+
(33) GFT TEST
TO GFT SHEET 9
I/O CONFIG NOT MARKED ON PANEL
SEAR II EVENT RECORDER & VHF RADIO
DESIGNED BY: DBS 12-03-06
DRAWN BY: IRE 12-03-06
CHECKED BY: RDO 12-05-06
IN SERVICE:
NORFOLK SOUTHERN
OFFICE OF ASS'T. VICE PRESIDENT COMM. & SIGNAL, ATLANTA, GA.
M.P.: CD-295.85
TOLEDO, OH
FLGS AT HOLLAND-SYLVANIA RD.
CHICAGO LINE
FILE No. R-05-1576
CADD or DWG. No. 36002958.08
SHEET No. 8 of 19
REVISION INITIALS
PROPERTY
PENNSYLVANIA R.R.

SITE SET UP PROCEDURE		
	FUNCTION	LED DISPLAY
	DATE	- -
	TIME	:
	DAYLIGHT SAVINGS TIME	YES
	TIME ZONE	CST
	SITE NAME	HOLLAND-SYLVANIA RD.
	DOT NUMBER	509 457F
	MILEPOST	CD-295.85
	TESTER TYPE	CROSSING
	DATE FORMAT	MM-DD-YYYY
	TEMP FORMAT	FAHRENHEIT
	SITE TYPE	NO COMMUNICATION
	SITE ATCS	7.RRR.LLL.GGG.03.01
***	OFFICE ATCS ADDRESS	2.000.00.0000
***	POLL ID	1
***	OFFICE F8/F9	YES
***	OFFICE COMM DEVICE	SPREAD SPECTRUM RADIO
***	DIAL MODEM PORT	AUX/COMM
***	PHONE NUMBER	(OFFICE NUMBER)
***	INIT STRING	(LEAVE BLANK)
***	BACKUP SITE ADDRESS 1	
***	BACKUP SITE ADDRESS 2	
***	FIELD COMM	
****	USER PORT	BAUD 57600, N, 8, 1, NONE
****	AUX PORT	BAUD 9600, N, 8, 1, NONE
****	COMM PORT	BAUD 9600, N, 8, 1, NONE

VERIFY NUMBER OF BULBS	
CURR 1: LAMP SET UP	8 BULBS
CURR 2: LAMP SET UP	8 BULBS

CONTROL SYSTEM CONFIGURATION MENU QUESTIONS	
THE QUESTION	SELECT FROM MENU OPTION
RESET NAMES AND MODULES?	YES
NUMBER OF TRACKS?	2
NUMBER OF XR INPUTS?	1
CONSTANT WARNING DEVICE	GCP
CROSSING CONTROLLER?	SSCC III (A, PLUS)
MAIN / STANDBY	YES
AUXILIARY TRACKS?	YES
AUX TRACK	SET TO AUX
GATES?	2
EXIT GATES?	0
UAX?	DROPS MD/GCP
BATTERY BANKS?	2
PREEMPTION?	NO
ILOD MODULES?	1
LAMP TYPE?	NORMAL
AUTO INSPECTIONS?	YES
BELL SENSOR?	** 1
BELL SENSOR INPUT 7	** YES
BELL SENSOR INPUT 8	** NO
BELL SENSOR INPUT 9	** NO
BELL SENSOR INPUT 10	** NO
BELL ON?	GATES LOWERING
GATE TIP SENSORS?	YES
GROUND FAULT DETECTORS?	YES
CHANNEL 1	161.475 MHZ
CHANNEL 2	NONE
FULL APPROACH MOVE ALARMS	ACTIVATE
SSCC ATCS ADDRESS	7.RRR.LLL.GGG.07.01

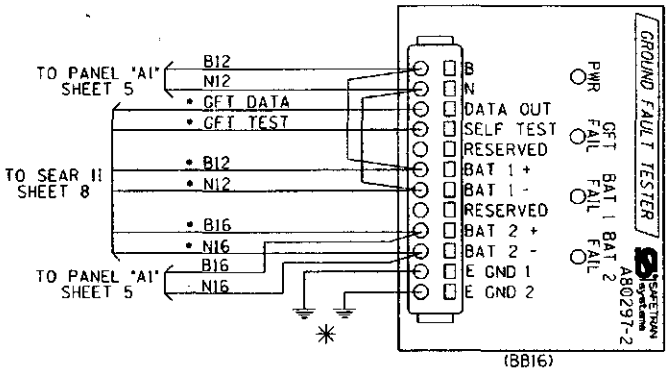

VERIFY THE BATTERY SUPPLY VOLTAGES	
B12 BATTERY VOLTAGE AT INPUT DC1	VOLT 1: . .
B16 BATTERY VOLTAGE AT INPUT DC2	VOLT 2: .

NOTES:
ALL WIRING TO BE #16AWG UNLESS NOTED OTHERWISE

• = CABLE PROVIDED WITH SEAR II

** = OPTIONS: IF BELL SENSOR = 0, THEN BELL FIELDS ARE NOT USED.

*** = IF SITE TYPE = NO COMMUNICATION, THEN THESE OPTIONS ARE NOT DISPLAYED

**** = THESE SETTINGS SHOULD BE LEFT AT THE DEFAULT SETTING.

✳ = CONNECT "E GND 1" AND "E GND 2" TO INDEPENDENT GROUND POINTS ON SIDE A AND SIDE B.

SEAR II SET UP CHART
& GROUND FAULT TESTER

DESIGNED BY: DBS 12-03-06	NORFOLK SOUTHERN		
DRAWN BY: IRE 12-03-06	OFFICE OF ASS'T. VICE PRESIDENT COMM. & SIGNAL, ATLANTA, GA.	M.P.: CD-295.85	
CHECKED BY: RDO 12-05-06	TOLEDO, OH FLGS AT HOLLAND-SYLVANIA RD.		
IN SERVICE: - -	CHICAGO LINE	FILE No. R-05-1576	
	CADD or DWG. No. FEDFLGS2.09	SHEET No. 9 of 19	

REVISION INITIALS										

PROPERTY
PENNSYLVANIA R.R.

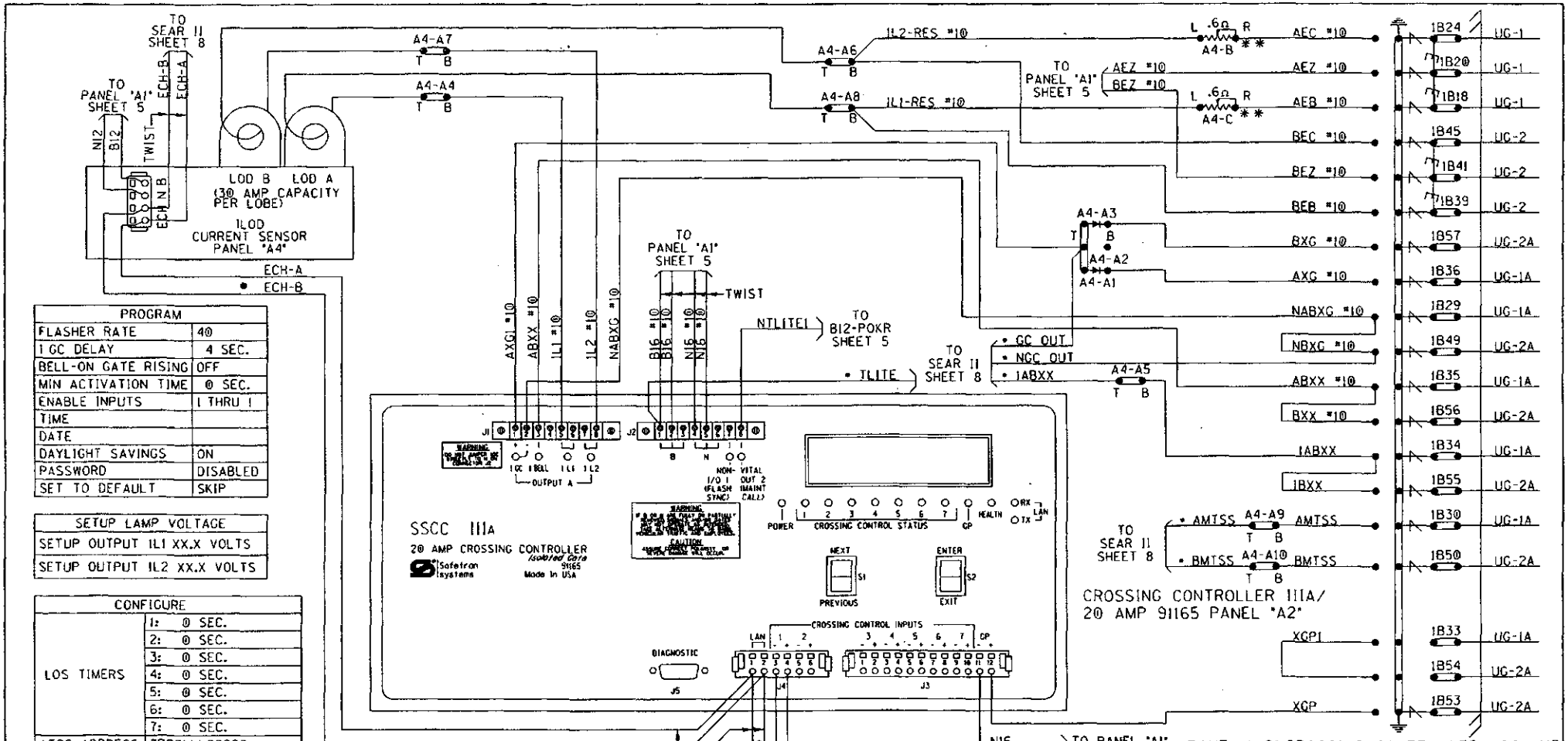

PROGRAM	
FLASHER RATE	40
1 GC DELAY	4 SEC.
BELL-ON GATE RISING	OFF
MIN ACTIVATION TIME	0 SEC.
ENABLE INPUTS	1 THRU 1
TIME	
DATE	
DAYLIGHT SAVINGS	ON
PASSWORD	DISABLED
SET TO DEFAULT	SKIP

SETUP LAMP VOLTAGE
SETUP OUTPUT IL1 XX.X VOLTS
SETUP OUTPUT IL2 XX.X VOLTS

CONFIGURE		
LOS TIMERS	1:	0 SEC.
	2:	0 SEC.
	3:	0 SEC.
	4:	0 SEC.
	5:	0 SEC.
	6:	0 SEC.
	7:	0 SEC.
ATCS ADDRESS	7RRRLLLGCG07	
LOW BATTERY	DISABLED	
AUX I/O	NV OUTPUT	

TEST CONFIGURE	
LAMP TEST CANCEL TIMER	5 MIN.
LAMP TEST DELAY TIMER	30 SEC.
LAMP TEST ON TIMER	15 SEC.

NOTES:
ALL WIRING TO BE #16AWG UNLESS NOTED OTHERWISE.

* = CABLE PROVIDED WITH SEAR II

⊳| = DIODE SAFETRAN PN 8A299

** = RESISTORS TO BE INSTALLED TO LAMPS WITH SHORTEST CABLE RUN

• = ECHELON CONNECTIONS NOT TO EXCEED 53' IN LENGTH AND TOTAL LENGTH NOT TO EXCEED 430' WITH A MAXIMUM OF 8 NODES, RECOMMEND USE BELDEN WIRE CABLE #8461 OR EQUIVALENT.

REVISION INITIALS									

PROPERTY
PENNSYLVANIA R.R.

DESIGNED BY:	
DBS	12-03-06
DRAWN BY:	
IRE	12-03-06
CHECKED BY:	
RDO	12-05-06
IN SERVICE:	
	- -

NORFOLK SOUTHERN

OFFICE OF ASS'T. VICE PRESIDENT COMM. & SIGNAL, ATLANTA, GA.

M.P.: CD-295.85

TOLEDO, OH
FLGS AT HOLLAND-SYLVANIA RD.

CHICAGO LINE

FILE No. R-05-1576

CADD or DWG. No. 36002958.10

SHEET No. 10 of 19

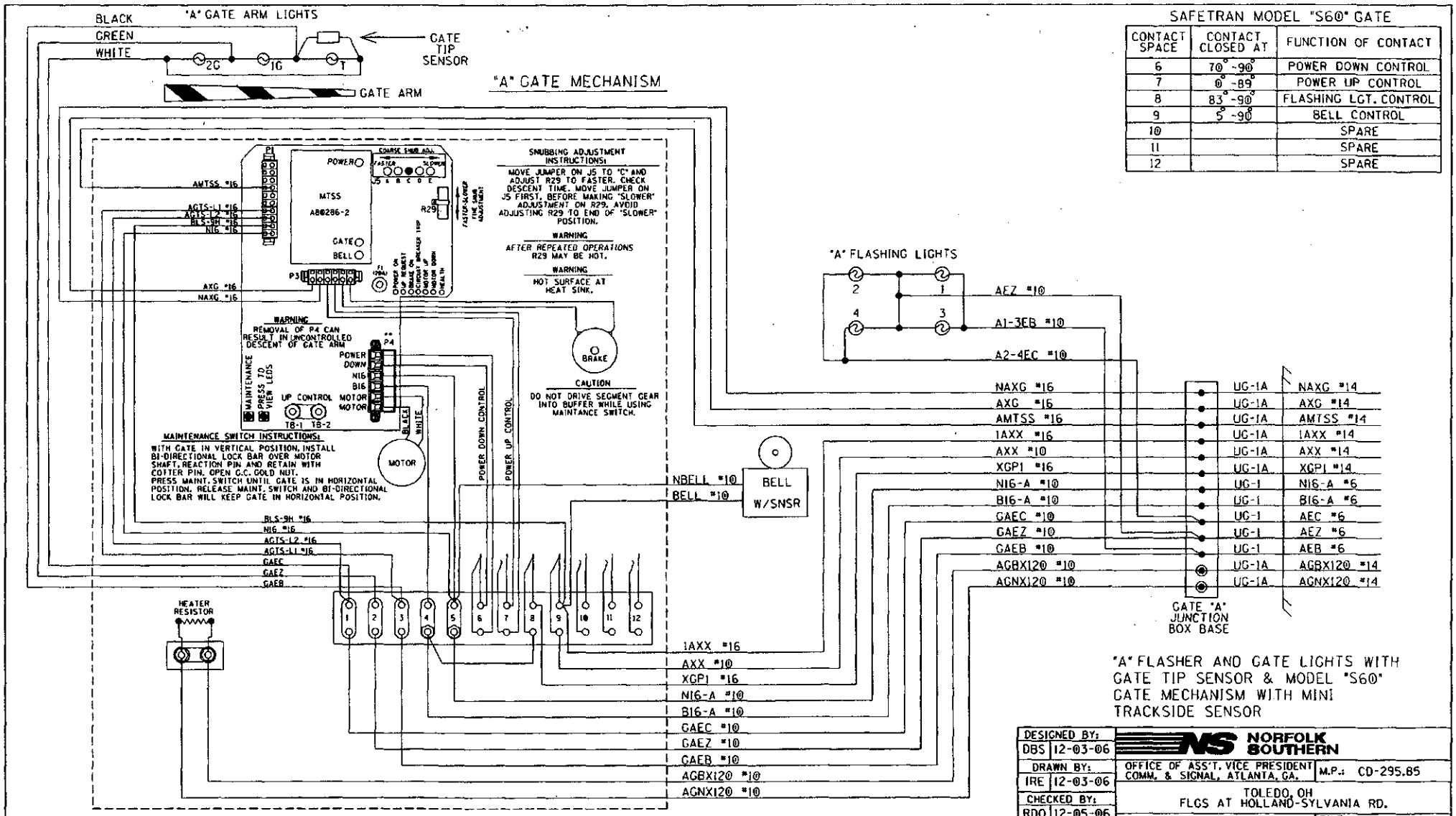

SAFETRAN MODEL "S60" GATE

CONTACT SPACE	CONTACT CLOSED AT	FUNCTION OF CONTACT
6	70° -90°	POWER DOWN CONTROL
7	0° -89°	POWER UP CONTROL
8	83° -90°	FLASHING LGT. CONTROL
9	5° -90°	BELL CONTROL
10		SPARE
11		SPARE
12		SPARE

"A" FLASHER AND GATE LIGHTS WITH GATE TIP SENSOR & MODEL "S60" GATE MECHANISM WITH MINI TRACKSIDE SENSOR

DESIGNED BY: DBS 12-03-06	NORFOLK SOUTHERN	
DRAWN BY: IRE 12-03-06	OFFICE OF ASS'T. VICE PRESIDENT COMM. & SIGNAL, ATLANTA, GA.	M.P.: CD-295.85
CHECKED BY: RDO 12-05-06	TOLEDO, OH FLGS AT HOLLAND-SYLVANIA RD.	
IN SERVICE: - -	CHICAGO LINE	FILE No. R-05-1576
	CADD or DWG. No. 36002958.11	SHEET No. 11 of 19

REVISION INITIALS

PROPERTY PENNSYLVANIA R.R.

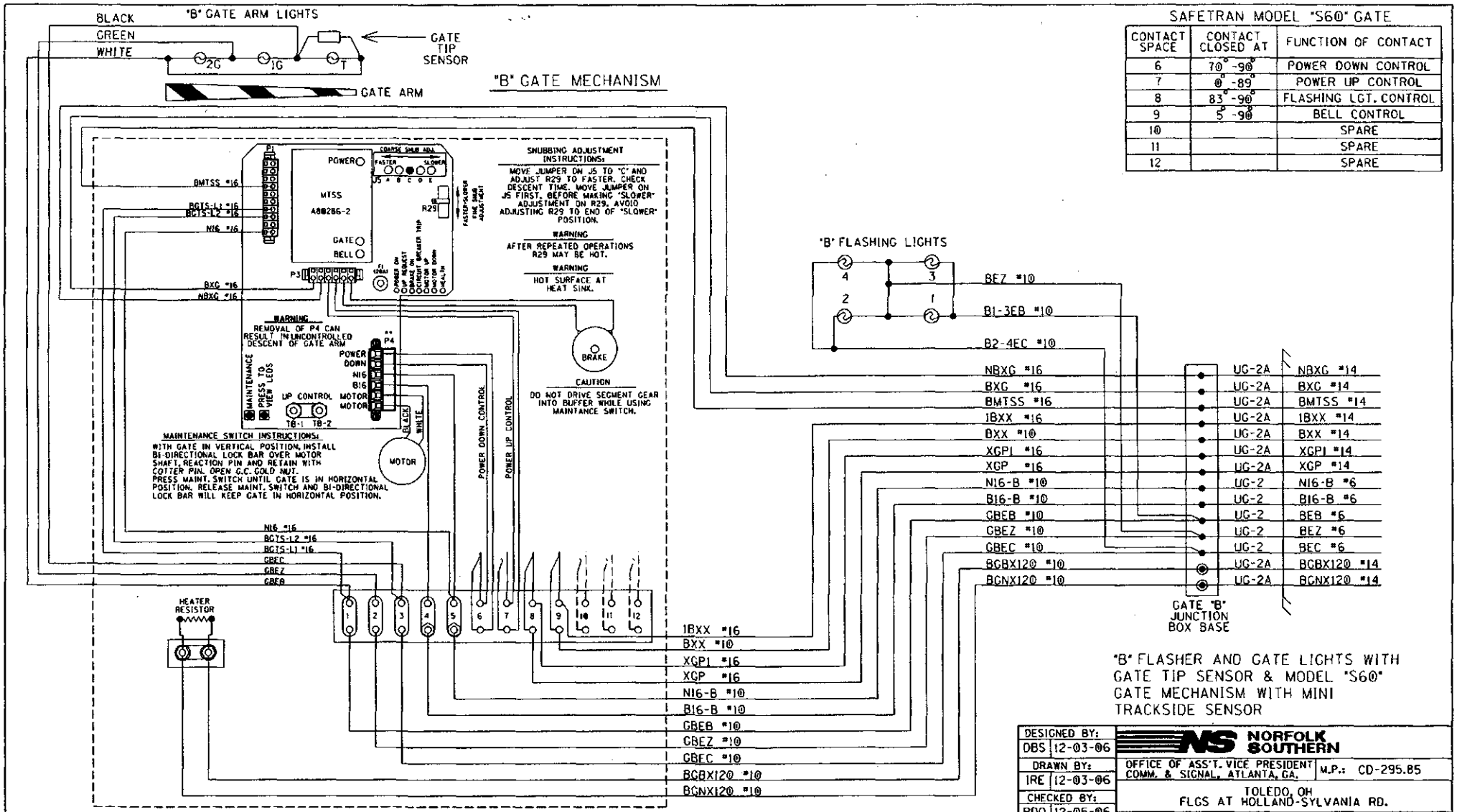

SAFETRAN MODEL "S60" GATE

CONTACT SPACE	CONTACT CLOSED AT	FUNCTION OF CONTACT
6	70° -90°	POWER DOWN CONTROL
7	0° -89°	POWER UP CONTROL
8	83° -90°	FLASHING LGT. CONTROL
9	5° -90°	BELL CONTROL
10		SPARE
11		SPARE
12		SPARE

"B" FLASHER AND GATE LIGHTS WITH GATE TIP SENSOR & MODEL "S60" GATE MECHANISM WITH MINI TRACKSIDE SENSOR

DESIGNED BY: DBS 12-03-06	NORFOLK SOUTHERN	
DRAWN BY: IRE 12-03-06	OFFICE OF ASS'T. VICE PRESIDENT COMM. & SIGNAL, ATLANTA, GA.	M.P.: CD-295.85
CHECKED BY: RDO 12-05-06	TOLEDO, OH FLGS AT HOLLAND-SYLVANIA RD.	
IN SERVICE: - -	CHICAGO LINE	FILE No. R-05-1576
	CADD or DWG. No. 36002958.12	SHEET No. 12 of 19

REVISION INITIALS

PROPERTY PENNSYLVANIA R.R.

LEFT TWO ROWS TERMINAL BOARD 1

"1A" "1B"

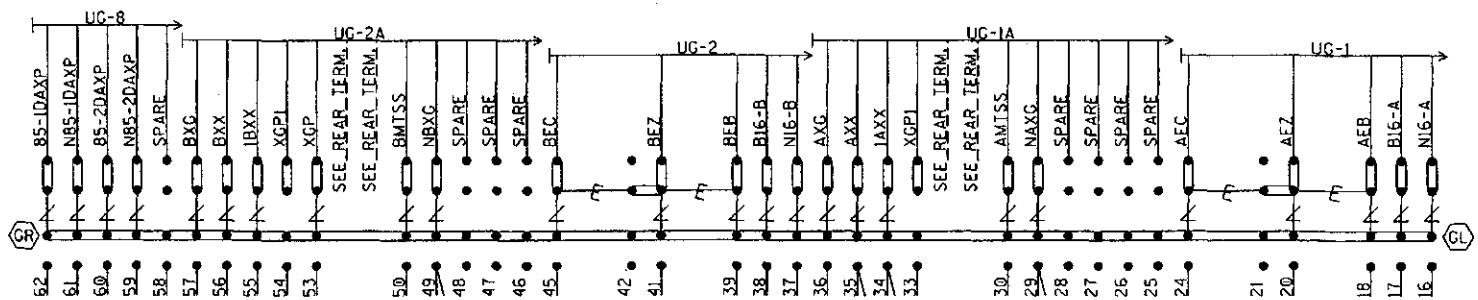

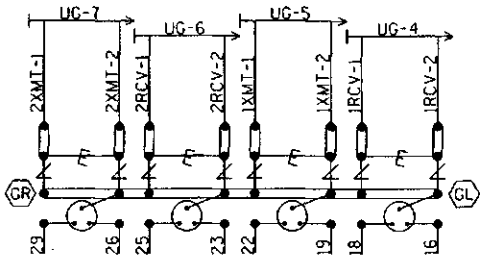

NOTE: INSTALL TEST LINKS ON ALL TRACK WIRES AND ON ALL LOW VOLTAGE UNDERGROUND CABLE TERMINATIONS.

SEE FARADAY SHIELD DETAILS - 1A & 1B FOR HOW THIS PORTION OF THE FARADAY SHIELD IS PREDRILLED. ONLY INSTALL AND USE THE TERMINALS NEEDED.

= Heavy Duty Equalizer (022700-1X)

= Clearview Lightning Arrester (022585-1X)

= LPC-10560-51

GR / GL = TERMINALS GROUNDED TO SHIELD. 4 POST BLOCKS USE EITHER - GR - SERMMI PART NO. 61278 GL - SERMMI PART NO. 61278-1.

BACKBOARD DETAIL - 1A & 1B

DESIGNED BY: DBS 12-03-06	NORFOLK SOUTHERN		
DRAWN BY: IRE 12-03-06	OFFICE OF ASS'T. VICE PRESIDENT COMM. & SIGNAL, ATLANTA, GA.	M.P.: CD-295.85	
CHECKED BY: RDO 12-05-06	TOLEDO, OH FLGS AT HOLLAND-SYLVANIA RD.		
IN SERVICE: - -	CHICAGO LINE	FILE No. R-05-1576	
	CADD or DWG. No. 36002958.13	SHEET No. 13 of 19	

REVISION INITIALS										

PROPERTY PENNSYLVANIA R.R.

REAR VIEW OF LEFT TWO ROWS TERMINAL BOARD 1
"1B" "1A"

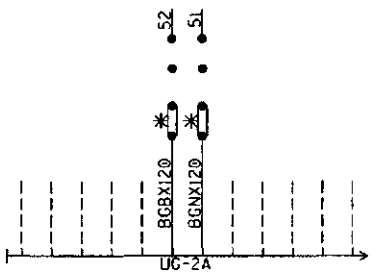

(SEE PREVIOUS SHEET FOR OTHER WIRES IN CABLE)

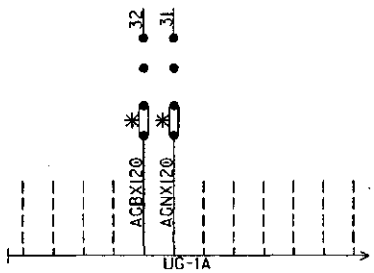

(SEE PREVIOUS SHEET FOR OTHER WIRES IN CABLE)

NOTE: ALL 120VAC AND ABOVE WILL BE WIRED TO THE REAR OF FARADAY BACKBOARD. INSULATED NUTS MUST BE USED ON ALL TERMINALS.

✱ = CLOSED DURING WINTER MONTHS

REAR OF FARADAY BACKBOARD
REAR BACKBOARD DETAIL - 1A & 1B

DESIGNED BY: DBS 12-03-06	NORFOLK SOUTHERN		
DRAWN BY: IRE 12-03-06	OFFICE OF ASS'T. VICE PRESIDENT COMM. & SIGNAL, ATLANTA, GA.	M.P.: CD-295.85	
CHECKED BY: RDO 12-05-06	TOLEDO, OH FLGS AT HOLLAND-SYLVANIA RD.		
IN SERVICE: - -	CHICAGO LINE	FILE No. R-05-1576	
	CADD or DWG. No. 36002958.14	SHEET No. 14 of 19	

REVISION INITIALS												PROPERTY PENNSYLVANIA R.R.

NOTE: IF THE FARADAY SHIELD WOULD EVER NEED TO BE DRILLED IN THE FIELD, PROPER PRECAUTIONS MUST BE TAKEN TO INSURE METAL SHAVINGS DO NOT GET INTO EXISTING TERMINALS/WIRES.

AREA BELOW IS SCALED WITH AS=.75

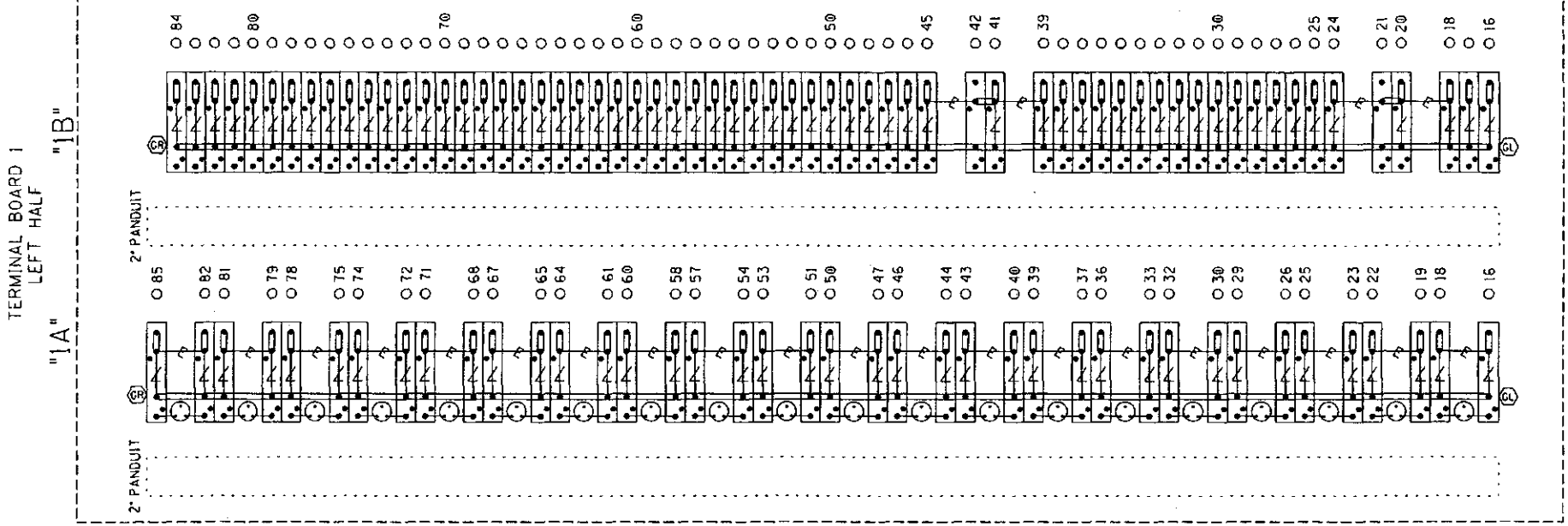

= Heavy Duty Equalizer (022700-1X)

Clearview = Lightning Arrester (022585-1X)

= LPC-10560-51

TERMINAL BOARD 1
LEFT TWO ROWS
FARADAY SHIELD DETAIL - 1A & 1B

= INDICATES PLACEMENT OF PANDUIT

THIS SHEET IS FOR REFERENCE ONLY, TO REFLECT HOW THE FARADAY SHIELD IS PREDRILLED. ONLY INSTALL AND USE THE TERMINALS NEEDED.

GR / GL = TERMINALS GROUNDED TO SHIELD. 4 POST BLOCKS USE EITHER - GR - SERMMI PART NO. 61278 GL - SERMMI PART NO. 61278-1.

DESIGNED BY: DBS 12-03-06	NORFOLK SOUTHERN		
DRAWN BY: IRE 12-03-06	OFFICE OF ASS'T. VICE PRESIDENT COMM. & SIGNAL, ATLANTA, GA.	M.P.: CD-295.85	
CHECKED BY: RDO 12-05-06	TOLEDO, OH FLGS AT HOLLAND-SYLVANIA RD.		
IN SERVICE: - -	CHICAGO LINE	FILE No. R-05-1576	
	CADD or DWG. No. 36002958.15	SHEET No. 15 of 19	

REVISION INITIALS

PROPERTY: PENNSYLVANIA R.R.

NOTE: IF THE FARADAY SHIELD WOULD EVER NEED TO BE DRILLED IN THE FIELD, PROPER PRECAUTIONS MUST BE TAKEN TO INSURE METAL SHAVINGS DO NOT GET INTO EXISTING TERMINALS/WIRES.

AREA BELOW IS SCALED WITH AS=.75

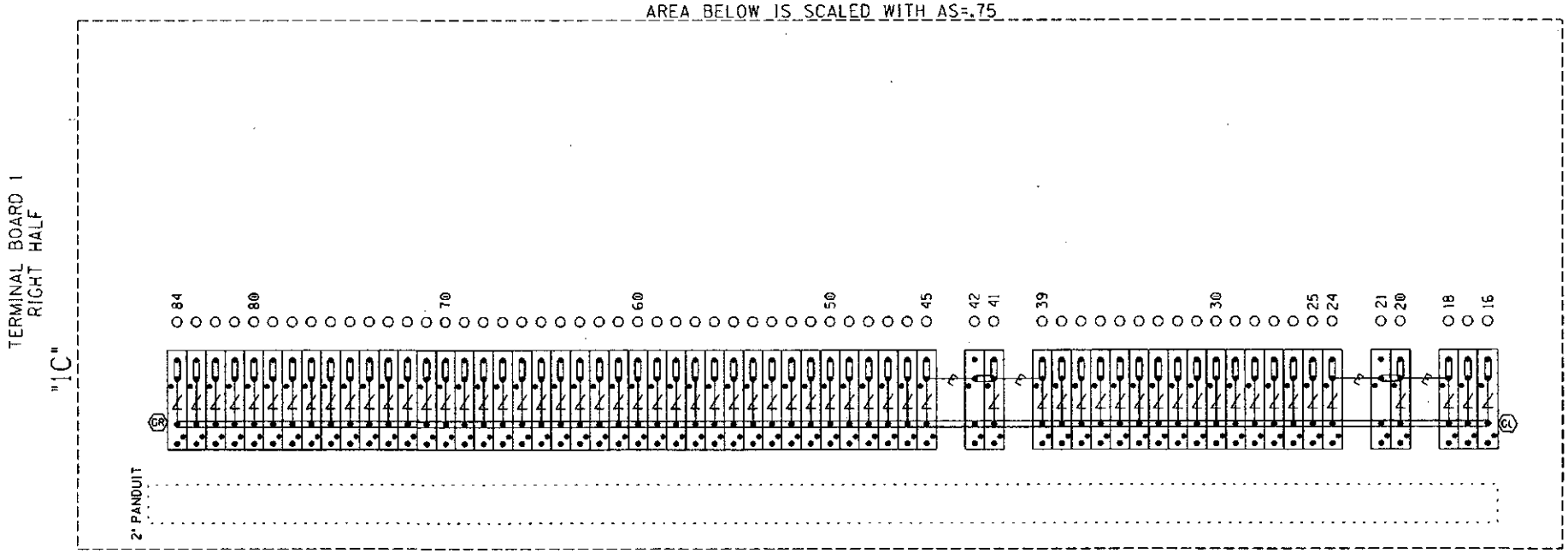

= Heavy Duty Equalizer (022700-1X)

Clearview = Lightning Arrester (022585-1X)

= LPC-10560-51

TERMINAL BOARD 1
RIGHT ROW
FARADAY SHIELD DETAIL - 1C

= INDICATES PLACEMENT OF PANDUIT

THIS SHEET IS FOR REFERENCE ONLY, TO REFLECT HOW THE FARADAY SHIELD IS PREDRILLED. ONLY INSTALL AND USE THE TERMINALS NEEDED.

GR / GL = TERMINALS GROUNDED TO SHIELD. 4 POST BLOCKS USE EITHER - GR - SERMMI PART NO. 61278 GL - SERMMI PART NO. 61278-1.

DESIGNED BY: DBS 12-03-06	NORFOLK SOUTHERN		
DRAWN BY: IRE 12-03-06	OFFICE OF ASS'T. VICE PRESIDENT COMM. & SIGNAL, ATLANTA, GA.	M.P.: CD-295.85	
CHECKED BY: RDO 12-05-06	TOLEDO, OH FLGS AT HOLLAND-SYLVANIA RD.		
IN SERVICE: - -	CHICAGO LINE	FILE No. R-05-1576	
PROPERTY PENNSYLVANIA R.R.	CADD or DWG. No. 36002958.16	SHEET No. 16 of 19	

REVISION INITIALS

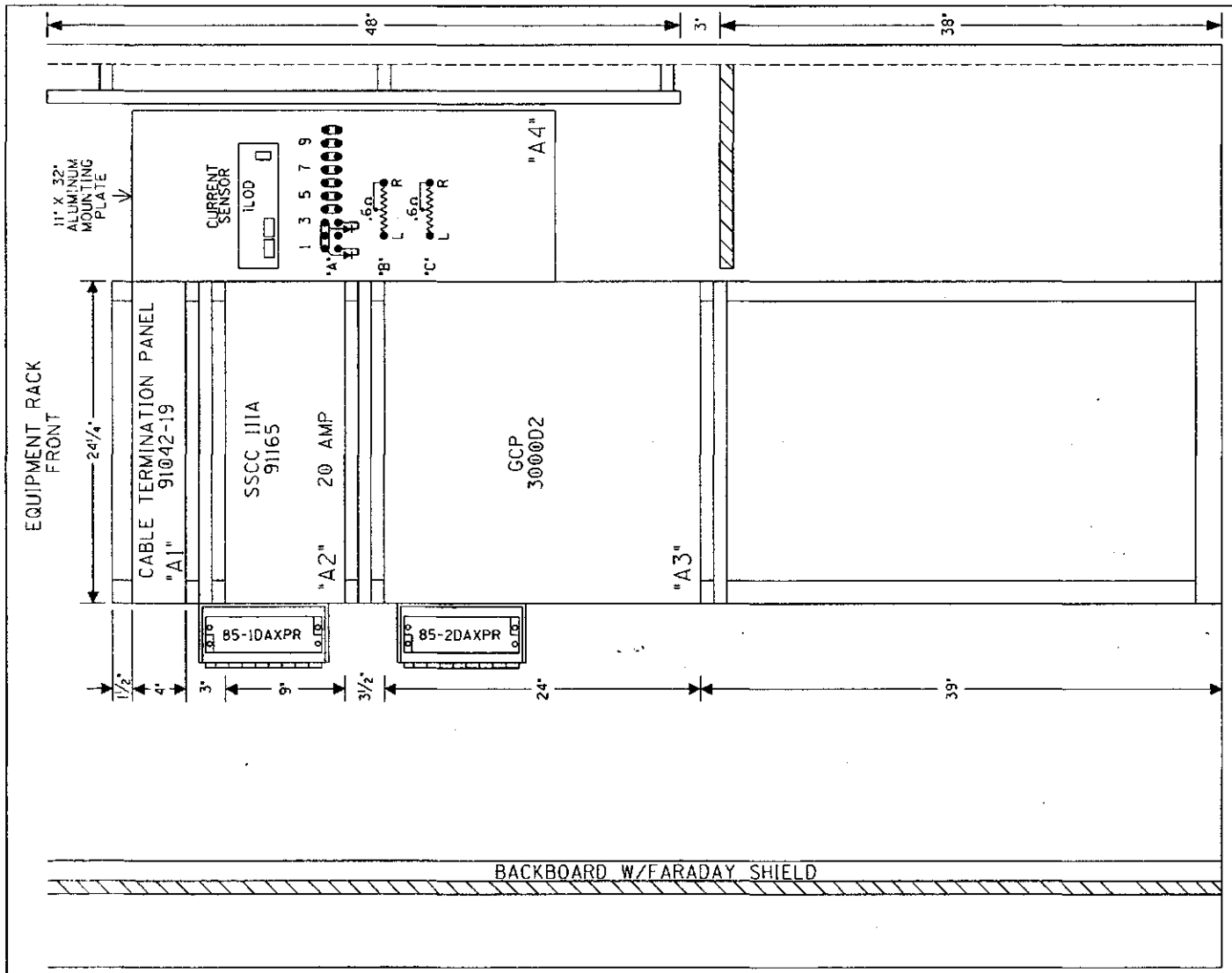

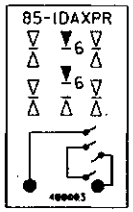

SAFETRAN, ALSTOM(GRS) RELAY CROSS REFERENCE LIST

SAFETRAN		ALSTOM(GRS)
400003	–	A62-308

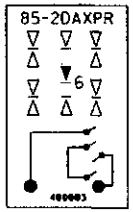

SAFETRAN, ALSTOM(GRS) RELAY CROSS REFERENCE LIST

SAFETRAN		ALSTOM(GRS)
400003	–	A62-308

SIDE "C"

RACK PLACEMENT
6' X 6' HOUSE - SIDE "C"

DESIGNED BY: DBS 12-03-06	NORFOLK SOUTHERN		
DRAWN BY: IRE 12-03-06	OFFICE OF ASS'T. VICE PRESIDENT COMM. & SIGNAL, ATLANTA, GA.	M.P.: CD-295.85	
CHECKED BY: RDO 12-05-06	TOLEDO, OH FLGS AT HOLLAND-SYLVANIA RD.		
IN SERVICE: - -	CHICAGO LINE	FILE No. R-05-1576	
	CADD or DWG. No. 36002958.17	SHEET No. 17 of 19	

REVISION INITIALS											

PROPERTY
PENNSYLVANIA R.R.

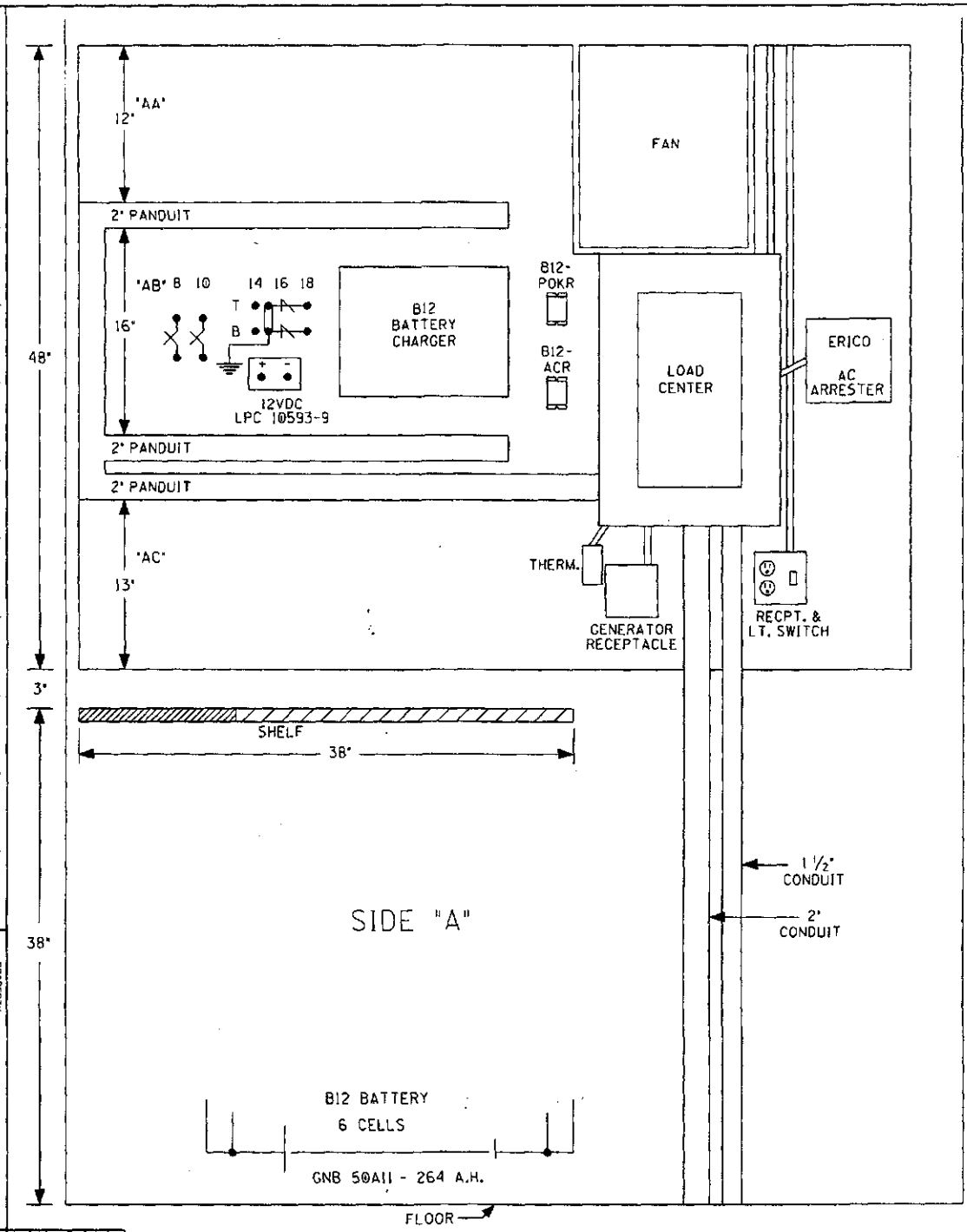

6' X 6' HOUSE - SIDE "A"

0 3 6 9

1FT 2FT 3FT

REVISION INITIALS	

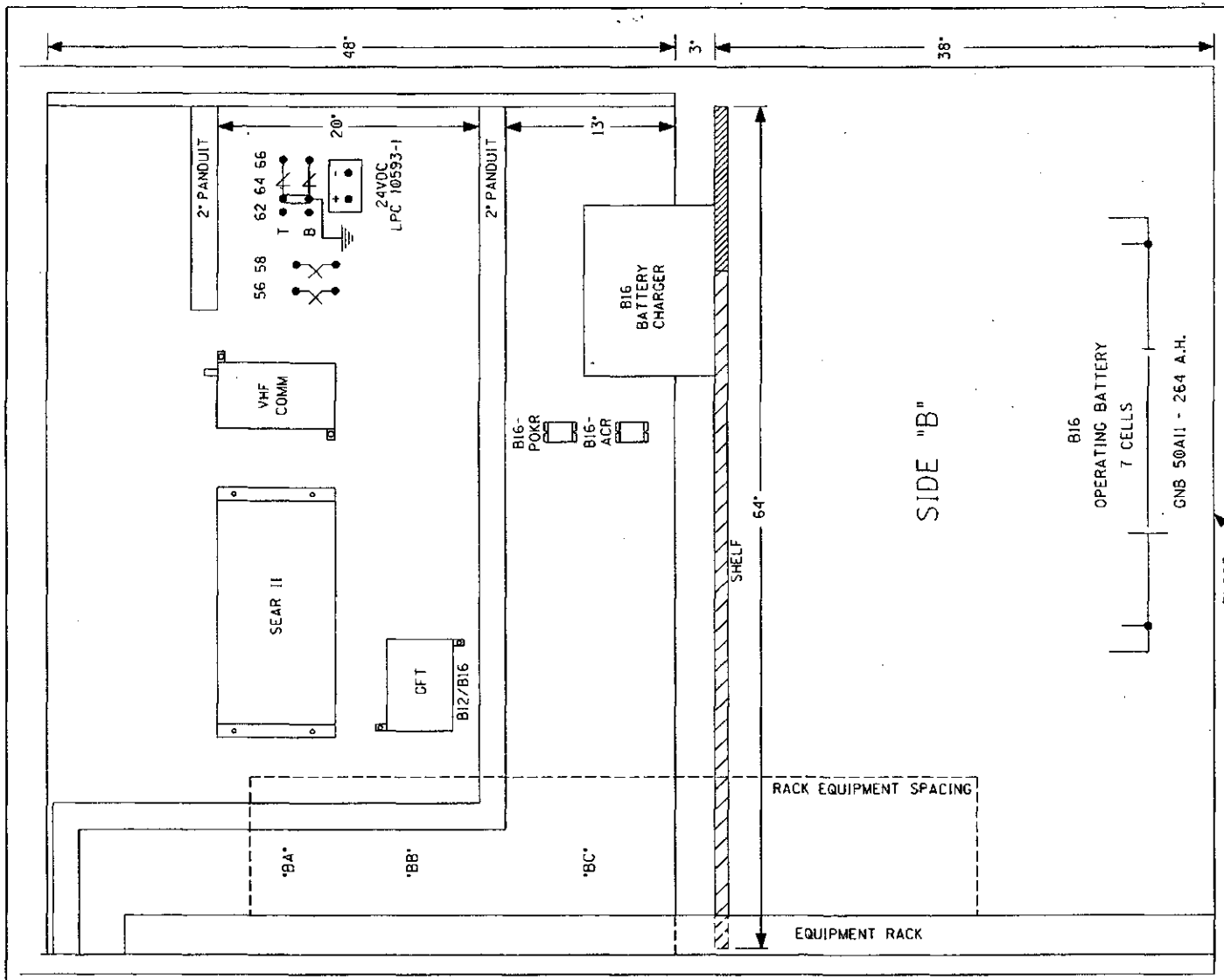

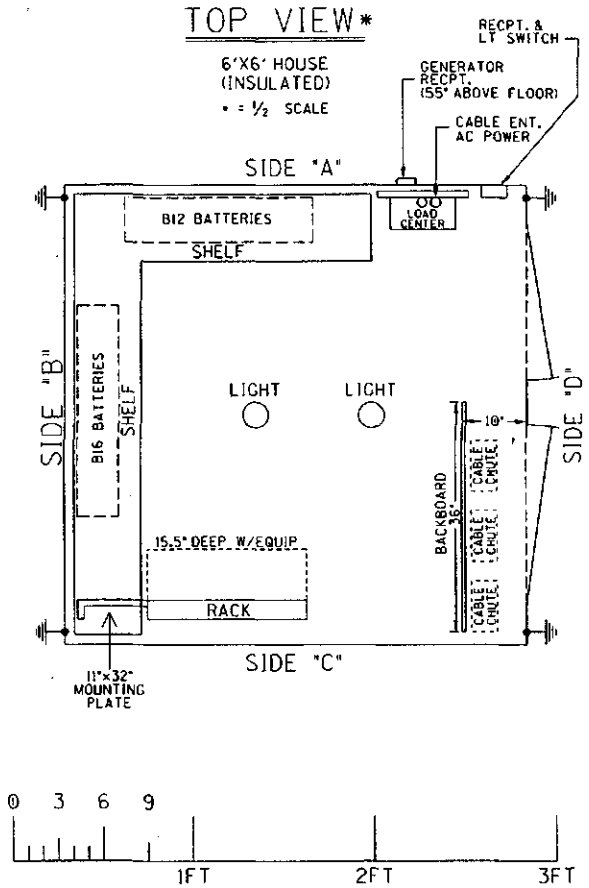

6' X 6' HOUSE (SIDE "B" & TOP VIEW)

DESIGNED BY: DBS 12-03-06	NORFOLK SOUTHERN		
DRAWN BY: IRE 12-03-06	OFFICE OF ASS'T. VICE PRESIDENT COMM. & SIGNAL, ATLANTA, GA.	M.P.: CD-295.85	
CHECKED BY: RDO 12-05-06	TOLEDO, OH FLGS AT HOLLAND-SYLVANIA RD.		
IN SERVICE: - -	CHICAGO LINE	FILE No. R-05-1576	
	CADD or DWG. No. 36002958.19	SHEET No. 19 of 19	

| REVISION INITIALS | | |

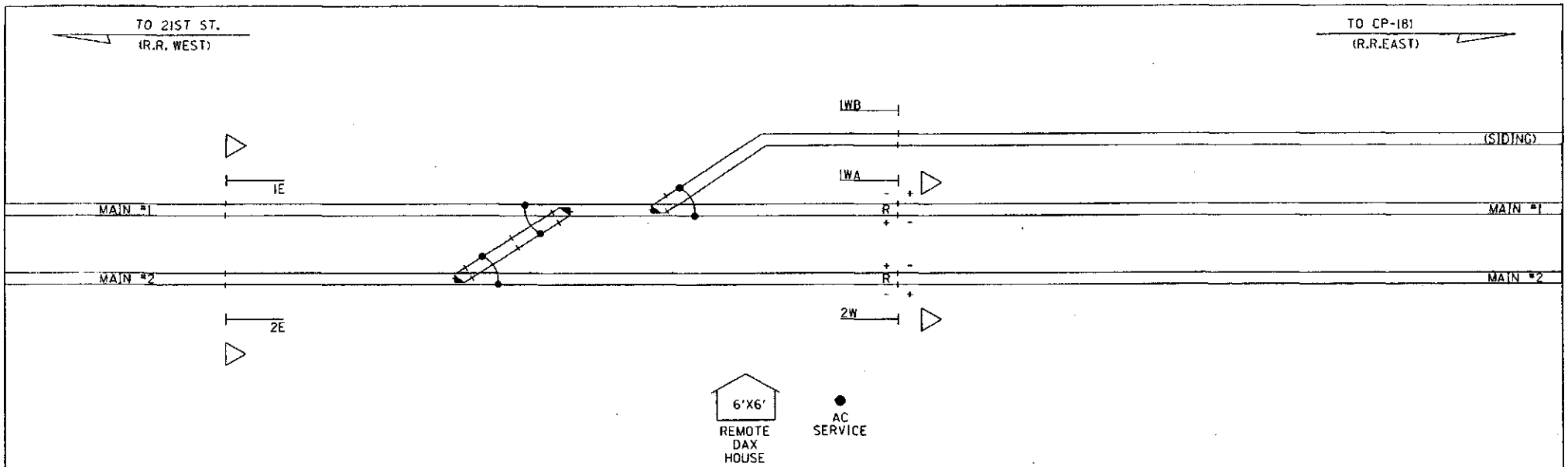

NOTES:

1. MAX. TRAIN SPEED: MAIN-79 M.P.H., SIDING-25 M.P.H.
2. LOCATE U/G UTILITIES & CABLE BEFORE DIGGING.
3. FIELD TO VERIFY PLACEMENT OF UNIDIRECTIONAL SHELTER.

IN SERVICE _____ SIGNED _____ DATE

☐ S&E ENGINEERING COPY
☐ CONSTRUCTION OFFICE COPY
RETURN TO S&E ENG. AFTER COMPLETION
☐ FIELD COPY
RETURN TO CASE AFTER COMPLETION
☐ PROJECT ENGINEER COPY

NOT TO SCALE
PROJECT #10.0014

UNIDIRECTIONAL LAYOUT

FILE No. 061-10.0800

DESIGNED BY: DBS	12-03-06
DRAWN BY: IRE	12-03-06
CHECKED BY: RDO	12-05-06
IN SERVICE:	- -

NORFOLK SOUTHERN

OFFICE OF ASS'T. VICE PRESIDENT COMM. & SIGNAL, ATLANTA, GA.

M.P.: CD-295.20

TOLEDO, OH
REMOTE DAX HOUSE AT HOLLAND-SYLVANIA RD.

CHICAGO LINE

FILE No. R-

CADD or DWG. No. 36002952.01

SHEET No. 1 of 15

REVISION INITIALS

PROPERTY
PENNSYLVANIA R.R.

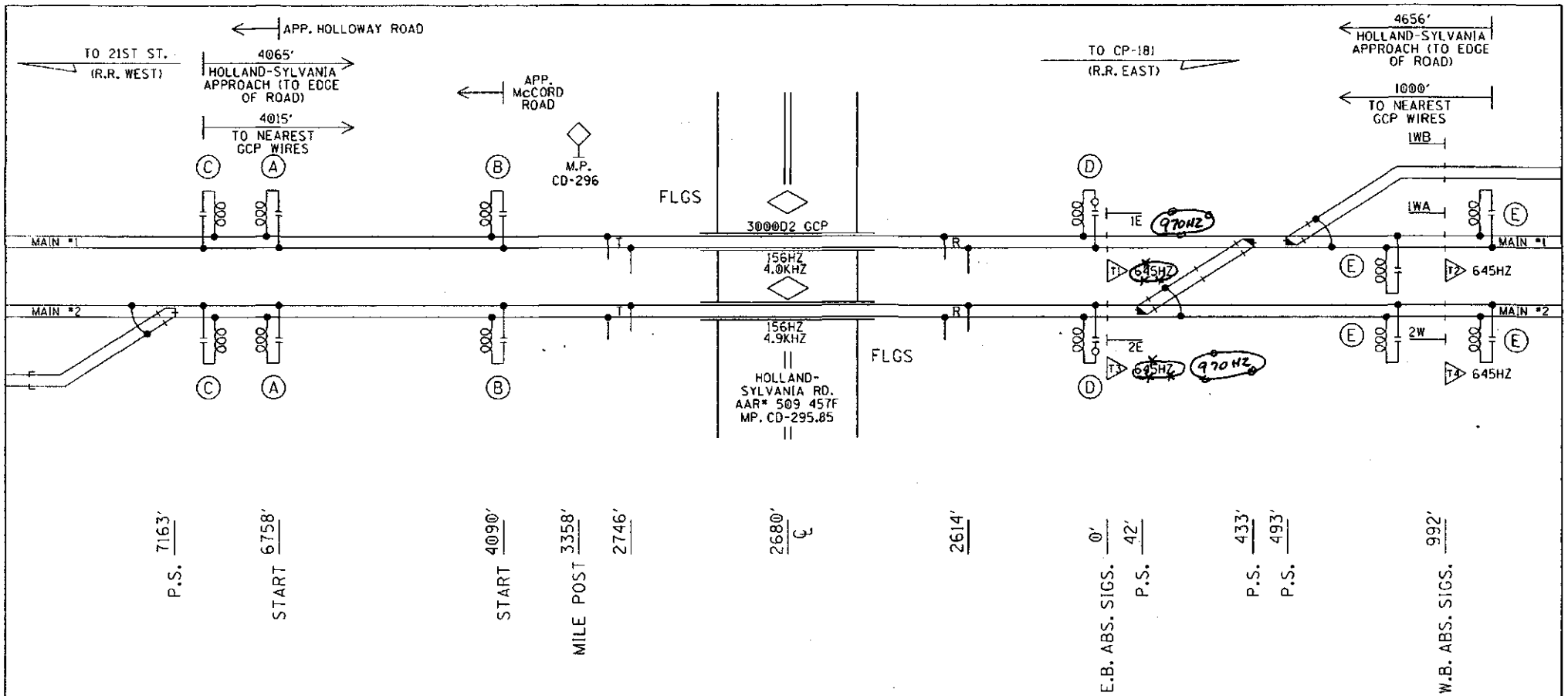

Ⓐ- SAFE. CUSTOM SHUNT (249HZ)

Ⓑ- SAFE. 62775 (86HZ)

Ⓒ- MF NBS 62775-8221 (156HZ)

Ⓓ- MF NBS 62775-8221 (156HZ) WITH SAFETRAN 8V617-1400

Ⓔ- MF NBS 62775-3497 (645HZ)

~~DD~~ = IN
~~RX~~ = OUT
CP
12-11-06

PROFILE

DESIGNED BY: DBS 12-03-06	NORFOLK SOUTHERN
DRAWN BY: IRE 12-03-06	OFFICE OF ASS'T. VICE PRESIDENT COMM. & SIGNAL, ATLANTA, GA. — M.P.: CD-295.20
CHECKED BY: RDO 12-05-06	TOLEDO, OH FLGS AT HOLLAND-SYLVANIA RD.
IN SERVICE: - -	CHICAGO LINE — FILE No. R-
	CADD or DWG. No. 36002952.02 — SHEET No. 2 of 15

REVISION INITIALS

PROPERTY
PENNSYLVANIA R.R.

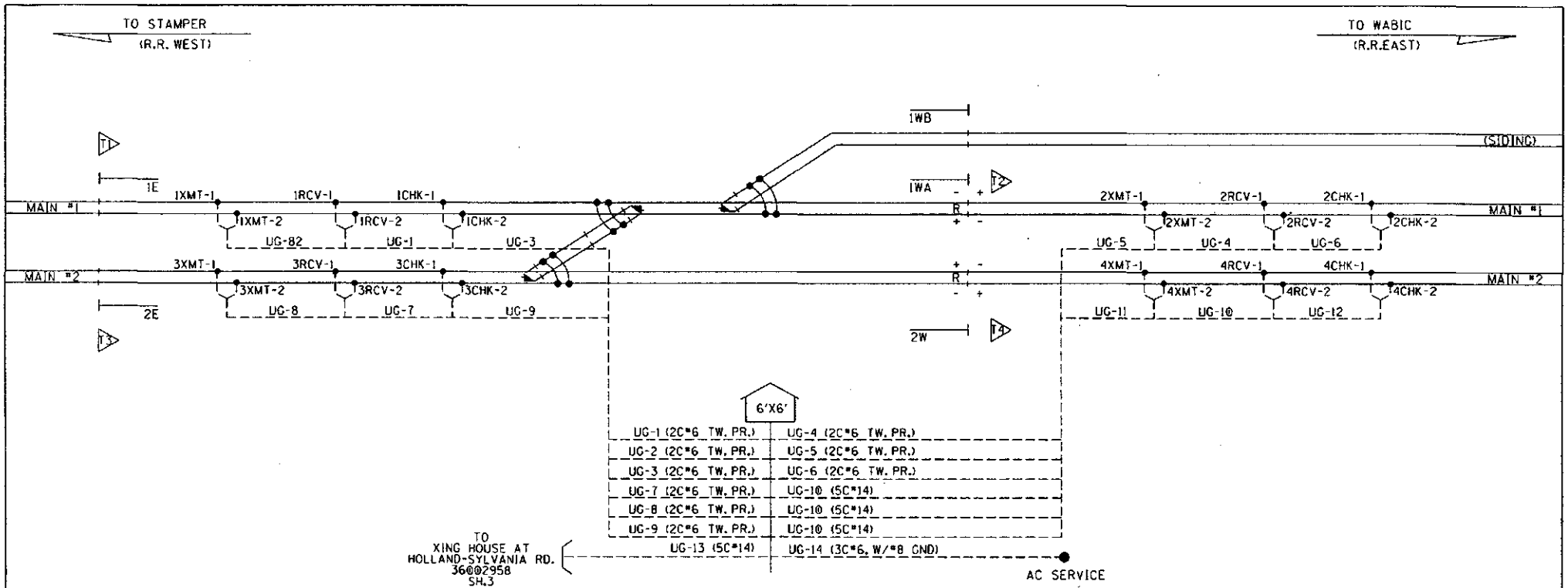

UG-1-TW. PR. *6	UG-4-TW. PR. *6	UG-7-TW. PR. *6	UG-10-TW.PR.*6	UG-13-5CUG *14
1RCV-1	2RCV-1	3RCV-1	4RCV-1	85-1DAXP
1RCV-2	2RCV-2	3RCV-2	4RCV-2	N85-1DAXP
				85-2DAXP
				N85-2DAXP
				SPARE

UG-2-TW. PR. *6	UG-5-TW. PR. *6	UG-8-TW. PR. *6	UG-11-TW.PR.*6
1XMT-1	2XMT-1	3XMT-1	4XMT-1
1XMT-2	2XMT-2	3XMT-2	4XMT-2

UG-3-TW. PR. *6	UG-6-TW. PR. *6	UG-9-TW. PR. *6	UG-12-TW.PR.*6
1CHK-1	2CHK-1	3CHK-1	4CHK-1
1CHK-2	2CHK-2	3CHK-2	4CHK-2

UG-14-3CUG *6 W/*8 GND
BX120-A
BX120-B
NX120
GND

DESIGNED BY: DBS 12-03-06	NORFOLK SOUTHERN		
DRAWN BY: IRE 12-03-06	OFFICE OF ASS'T. VICE PRESIDENT COMM. & SIGNAL, ATLANTA, GA.	M.P.: CD-295.20	
CHECKED BY: RDO 12-05-06	TOLEDO, OH REMOTE DAX HOUSE AT HOLLAND-SYLVANIA RD.		
IN SERVICE: - -	CHICAGO LINE	FILE No. R-	
	CADD or DWG. No. 36002952.03	SHEET No. 3 of 15	

REVISION INITIALS

PROPERTY
PENNSYLVANIA R.R.

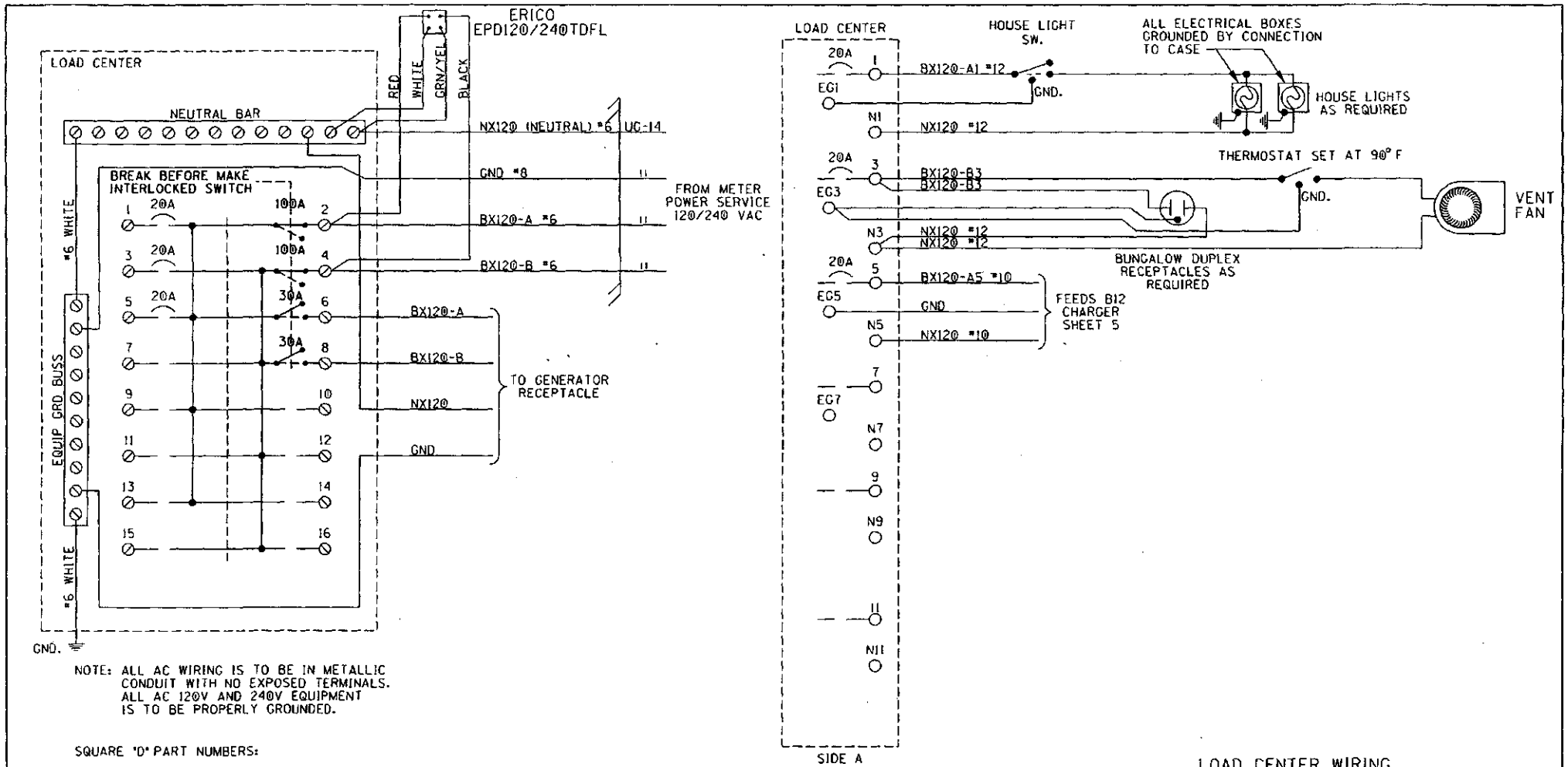

NOTE: ALL AC WIRING IS TO BE IN METALLIC CONDUIT WITH NO EXPOSED TERMINALS. ALL AC 120V AND 240V EQUIPMENT IS TO BE PROPERLY GROUNDED.

SQUARE 'D' PART NUMBERS:

LOAD CENTER——QO112L125G
100A 2P CIR BKR——QO2100
30A 2P CIR BKR——QO230
MECH INTERLOCK——PK4DTIM4LA

GENERATOR RECEPTACLE:
MALE CONNECTOR - NEMA L530-F1

LOAD CENTER WIRING

DESIGNED BY: DBS 12-03-06	NORFOLK SOUTHERN	
DRAWN BY: IRE 12-03-06	OFFICE OF ASS'T. VICE PRESIDENT COMM. & SIGNAL, ATLANTA, GA.	M.P.: CD-295.20
CHECKED BY: RDO 12-05-06	TOLEDO, OH REMOTE DAX HOUSE AT HOLLAND-SYLVANIA RD.	
IN SERVICE: - -	CHICAGO LINE	FILE No. R-
	CADD or DWG. No. 36002952.04	SHEET No. 4 of 15

REVISION INITIALS

PROPERTY
PENNSYLVANIA R.R.

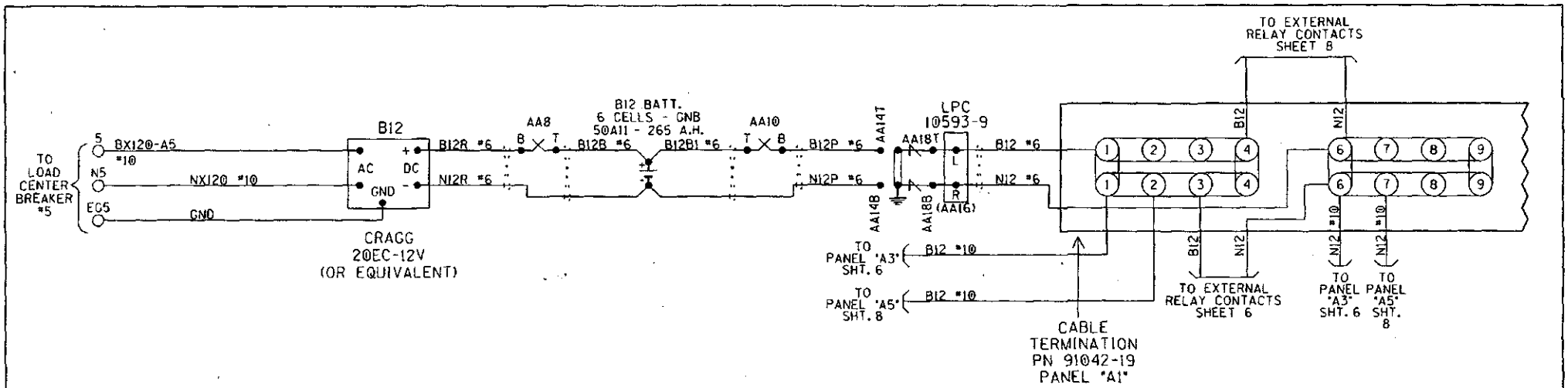

NOTES:
ALL WIRING TO BE #16AWG UNLESS NOTED OTHERWISE.

* = CABLE PROVIDED WITH SEAR II

= TWIST BATTERY LEADS

PANEL "A1" CABLE TERMINATION PANEL
B12 RECTIFIER HOOK-UP

DESIGNED BY: DBS 12-03-06	NORFOLK SOUTHERN	
DRAWN BY: IRE 12-03-06	OFFICE OF ASS'T. VICE PRESIDENT COMM. & SIGNAL, ATLANTA, GA.	M.P.: CD-295.20
CHECKED BY: RDO 12-05-06	TOLEDO, OH REMOTE DAX HOUSE AT HOLLAND-SYLVANIA RD.	
IN SERVICE: - -	CHICAGO LINE	FILE No. R-
	CADD or DWG. No. 36002952.05	SHEET No. 5 of 15

REVISION INITIALS

PROPERTY
PENNSYLVANIA R.R.

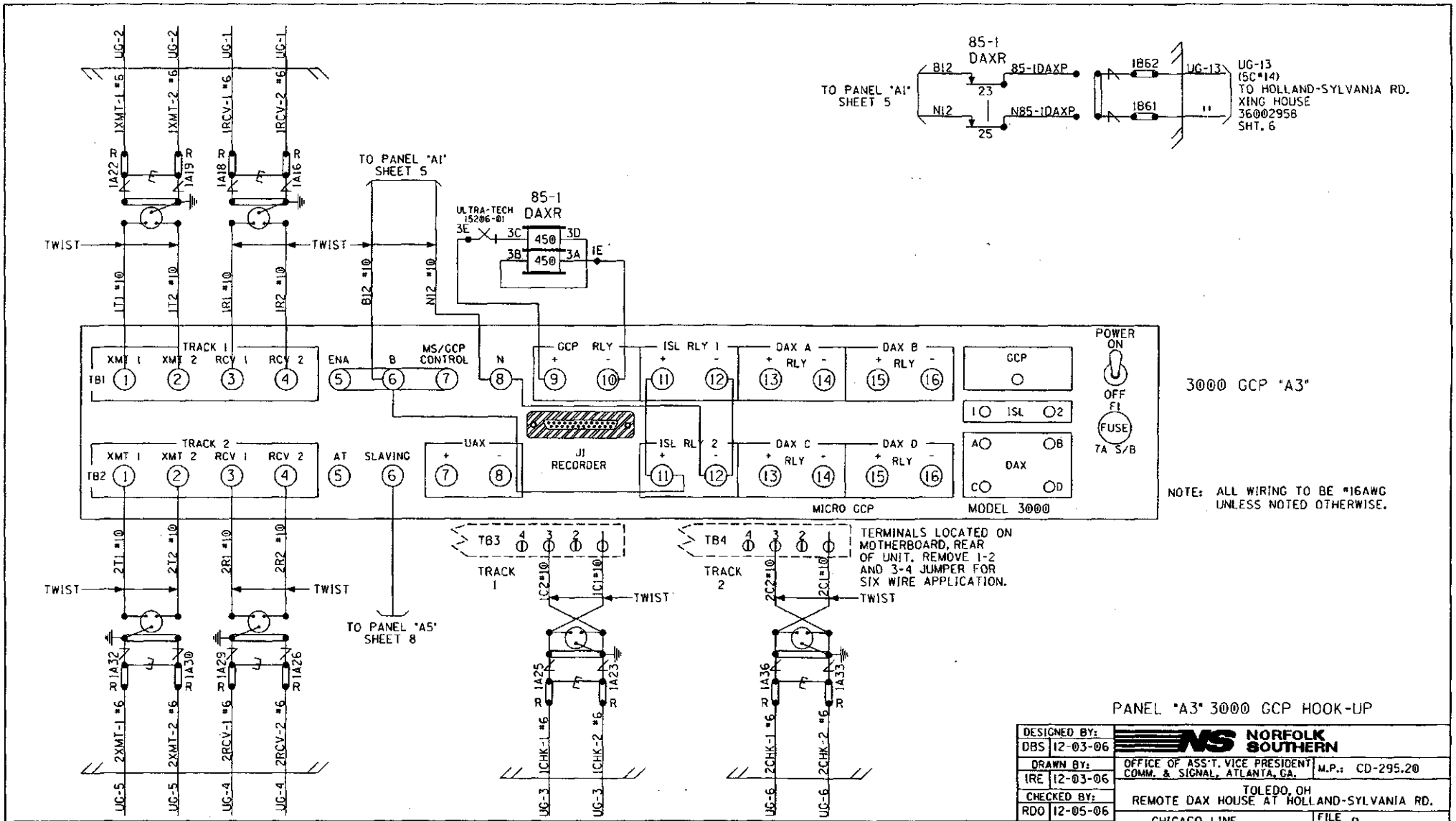

PANEL "A3" 3000 GCP HOOK-UP

DESIGNED BY: DBS 12-03-06	NORFOLK SOUTHERN	
DRAWN BY: IRE 12-03-06	OFFICE OF ASS'T. VICE PRESIDENT COMM. & SIGNAL, ATLANTA, GA.	M.P.: CD-295.20
CHECKED BY: RDO 12-05-06	TOLEDO, OH REMOTE DAX HOUSE AT HOLLAND-SYLVANIA RD.	
IN SERVICE: - -	CHICAGO LINE	FILE No. R-
	CADD or DWG. No. 36002952.06	SHEET No. 6 of 15

REVISION INITIALS

PROPERTY
PENNSYLVANIA R.R.

3000 PROGRAMMING CHART	(LEVEL: J)
NUMBER OF TRACK TRANSCEIVERS	2
T1: FREQUENCY	~~645Hz~~ 970 Hz
T2: FREQUENCY	645Hz
T1: UNIDIRECTIONAL/BIDIRECTIONAL	UNI
T2: UNIDIRECTIONAL/BIDIRECTIONAL	UNI
T1: XMIT LEVEL (MAX/MED)	MED
T2: XMIT LEVEL (MAX/MED)	MED
T1: PREDICTOR/MOTION SENSOR	PRED
T2: PREDICTOR/MOTION SENSOR	PRED
T1: WARNING TIME	30 Sec
T2: WARNING TIME	30 Sec
T1: APPROACH DISTANCE	992 Ft
T2: APPROACH DISTANCE	1000 Ft
UAX1 PICKUP DELAY (UAX) (0 = OFF)	0 Sec
ENA/UAX2 DELAY (0 = ENA)	-- Sec
T1: ISLAND DISTANCE	N/A Ft
T2: ISLAND DISTANCE	N/A Ft
NUMBER OF DAX'S	0 Ea
DAX A TRACK ASSIGNMENT (T1/T2)	T1
DAX A DISTANCE (0 = PREEMPT)	Ft
DAX A WARNING TIME	Sec
DAX B TRACK ASSIGNMENT (T1/T2)	T2
DAX B DISTANCE (0 = PREEMPT)	Ft
DAX B WARNING TIME	Sec
DAX C TRACK ASSIGNMENT (T1/T2)	---
DAX C DISTANCE (0 = PREEMPT)	Ft
DAX C WARNING TIME	Sec
DAX D TRACK ASSIGNMENT (T1/T2)	---
DAX D DISTANCE (0 = PREEMPT)	Ft
DAX D WARNING TIME	Sec
SLAVING (MASTER/SLAVE)	MASTER
PASSWORD ENABLED	NO
RECORDER INSTALLED	NO

EXPANDED PROGRAMMING

T1: SWITCH TO MS (ENTER EZ VALUE)	0 %	
T2: SWITCH TO MS (ENTER EZ VALUE)	0 %	
T1: TRANSFER DELAY MS TO GCP (0 = OFF)	0 Sec	
T2: TRANSFER DELAY MS TO GCP (0 = OFF)	0 Sec	
T1: TRANSFER MS TO GCP PRIME (ON/OFF)	---	(1)
T2: TRANSFER MS TO GCP PRIME (ON/OFF)	---	(1)
T1: TRANSFER MS TO GCP DAX A (ON/OFF)	---	(2)
T2: TRANSFER MS TO GCP DAX A (ON/OFF)	---	(2)
T1: TRANSFER MS TO GCP DAX B (ON/OFF)	---	(2)
T2: TRANSFER MS TO GCP DAX B (ON/OFF)	---	(2)
T1: TRANSFER MS TO GCP DAX C (ON/OFF)	---	(2)
T2: TRANSFER MS TO GCP DAX C (ON/OFF)	---	(2)
T1: TRANSFER MS TO GCP DAX D (ON/OFF)	---	(2)
T2: TRANSFER MS TO GCP DAX D (ON/OFF)	---	(2)
T1: PRIME PREDICTION OFFSET (0 = OFF)	2664 Ft	
T2: PRIME PREDICTION OFFSET (0 = OFF)	3656 Ft	
PICKUP DELAY PRIME	15 Sec	
PICKUP DELAY DAX A	-- Sec	
PICKUP DELAY DAX B	-- Sec	
PICKUP DELAY DAX C	-- Sec	
PICKUP DELAY DAX D	-- Sec	
T1: ENHANCED DETECTION (ON/OFF)	OFF	
T2: ENHANCED DETECTION (ON/OFF)	OFF	
BACK-TO-BACK T1 AND T2 (NO/YES)	---	(3)
T1: STATION STOP TIMER	10 Sec	(3)
T2: STATION STOP TIMER	10 Sec	(3)
T1: NUMBER OF TRACK WIRES (4/6)	6	
T2: NUMBER OF TRACK WIRES (4/6)	6	
T1: LOW EX ADJUSTMENT	0	
T2: LOW EX ADJUSTMENT	0	
T1: LOW EZ DETECTION	OFF	
T2: LOW EZ DETECTION	OFF	
T1: LOW EZ DETECTION TIMER (ON/OFF)	10 Min	(4)
T2: LOW EZ DETECTION TIMER (ON/OFF)	10 Min	(4)
T1: POSITIVE START (EZ LEVEL) (0 = OFF)	0	
T2: POSITIVE START (EZ LEVEL) (0 = OFF)	0	
T1: POSITIVE START TIMEOUT (0 = NONE)	0 Min	(5)
T2: POSITIVE START TIMEOUT (0 = NONE)	0 Min	(5)
SET AT OPERATION (NORMAL/DIAGNOSTIC)	NORMAL	
DIAGNOSTIC MESSAGES (ON/OFF)	ON	
DAX MESSAGES (ON/OFF)	ON	
ADVANCE PREEMPT TIMER (0 = OFF)	0	
T1: MOTION SENSING LEVEL (0 = NORMAL)	0 %	
T2: MOTION SENSING LEVEL (0 = NORMAL)	0 %	

✱ = 1ST SLOT AT LEFT END OF BAY

MODEL 3000 GCP MODULE ASSEMBLIES

UPPER BAY

MODULES POSITION	M1	M2	M3	M4	M5	M6	M7	M8	M9	M10
MODULE NUMBERS	80211-f(1) ✱ ISL	80211-f(2) ISL	80012 T/R 1	80012 T/R 2	80013 RLY DRV	80214 PROCS	80255 REC-INTF	80016 (1) DAX	80016 (2) DAX	80020 +80017
MODULES USED			X	X	X	X				X

NOTES:

1 - SEE IPI INSTRUCTION AND INSTALLATION MANUAL FOR 80211 ISLAND CALIBRATION PROCEDURE.

2 - TOGGLE SWITCH ON MOTHER BOARD:
UP = DUAL FREQ.
DOWN = SINGLE FREQ.

~~DD~~ = IN
~~AX~~ = OUT
CP
12-11-06

3000 PROGRAMMING NOTES:

1) AVAILALBE WHEN "TRANSFER DELAY MS TO GCP" AND "PRIME PREDICTION OFFSET" IS ON
2) AVAILABLE WHEN "TRANSFER DELAY MS TO GCP" AND DAX DISTANCE IS GREATER THAN ZERO
3) AVAILABLE WHEN "ENHANCED DETECTION" IS ON
4) AVAILABLE WHEN "LOW EZ DETECTION" IS ON
5) AVAILABLE WHEN "POSITIVE START" IS ON

PANEL "A3" 3000 GCP SET-UP

DESIGNED BY: DBS 12-03-06	NORFOLK SOUTHERN		
DRAWN BY: IRE 12-03-06	OFFICE OF ASS'T. VICE PRESIDENT COMM. & SIGNAL, ATLANTA, GA.	M.P.: CD-295.20	
CHECKED BY: RDO 12-05-06	TOLEDO, OH REMOTE DAX HOUSE AT HOLLAND-SYLVANIA RD.		
IN SERVICE: - -	CHICAGO LINE	FILE No. R-	
	CADD or DWG. No. 36002952.07	SHEET No. 7 of 15	

REVISION INITIALS

PROPERTY PENNSYLVANIA R.R.

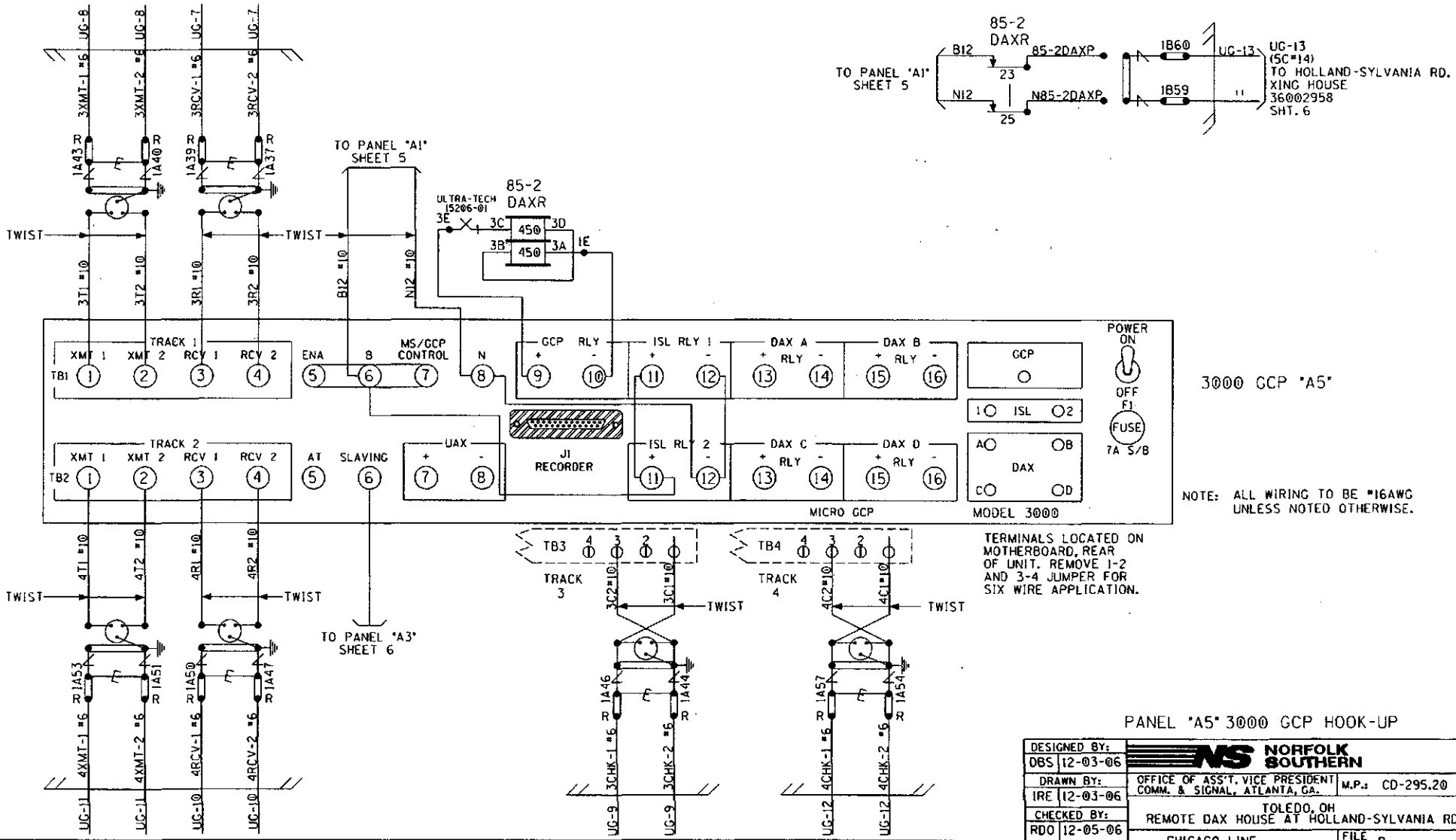

PANEL "A5" 3000 GCP HOOK-UP

DESIGNED BY: DBS 12-03-06	NORFOLK SOUTHERN		
DRAWN BY: IRE 12-03-06	OFFICE OF ASS'T. VICE PRESIDENT COMM. & SIGNAL, ATLANTA, GA.	M.P.: CD-295.20	
CHECKED BY: RDO 12-05-06	TOLEDO, OH REMOTE DAX HOUSE AT HOLLAND-SYLVANIA RD.		
IN SERVICE: - -	CHICAGO LINE	FILE No. R-	
	CADD or DWG. No. 36002952.08	SHEET No. 8 of 15	

REVISION INITIALS

PROPERTY PENNSYLVANIA R.R.

3000D2 PROGRAMMING CHART	(LEVEL: J)
NUMBER OF TRACK TRANSCEIVERS	2
T1: FREQUENCY	~~645HZ~~ 970 HZ
T2: FREQUENCY	645Hz
T1: UNIDIRECTIONAL/BIDIRECTIONAL	UNI
T2: UNIDIRECTIONAL/BIDIRECTIONAL	UNI
T1: XMIT LEVEL (MAX/MED)	MED
T2: XMIT LEVEL (MAX/MED)	MED
T1: PREDICTOR/MOTION SENSOR	PRED
T2: PREDICTOR/MOTION SENSOR	PRED
T1: WARNING TIME	30 Sec
T2: WARNING TIME	30 Sec
T1: APPROACH DISTANCE	992 Ft
T2: APPROACH DISTANCE	1000 Ft
UAX1 PICKUP DELAY (UAX) (0 = OFF)	0 Sec
ENA/UAX2 DELAY (0 = ENA)	0 Sec
T1: ISLAND DISTANCE	NA Ft
T2: ISLAND DISTANCE	NA Ft
NUMBER OF DAX'S	0 Ea
DAX A TRACK ASSIGNMENT (T1/T2)	---
DAX A DISTANCE (0 = PREEMPT)	Ft
DAX A WARNING TIME	Sec
DAX B TRACK ASSIGNMENT (T1/T2)	---
DAX B DISTANCE (0 = PREEMPT)	Ft
DAX B WARNING TIME	Sec
DAX C TRACK ASSIGNMENT (T1/T2)	---
DAX C DISTANCE (0 = PREEMPT)	Ft
DAX C WARNING TIME	Sec
DAX D TRACK ASSIGNMENT (T1/T2)	---
DAX D DISTANCE (0 = PREEMPT)	Ft
DAX D WARNING TIME	Sec
SLAVING (MASTER/SLAVE)	SLAVE
PASSWORD ENABLED	NO
RECORDER INSTALLED	NO

EXPANDED PROGRAMMING

T1: SWITCH TO MS (ENTER EZ VALUE)	0 %	
T2: SWITCH TO MS (ENTER EZ VALUE)	0 %	
T1: TRANSFER DELAY MS TO GCP (0 = OFF)	0 Sec	
T2: TRANSFER DELAY MS TO GCP (0 = OFF)	0 Sec	
T1: TRANSFER MS TO GCP PRIME (ON/OFF)	---	(1)
T2: TRANSFER MS TO GCP PRIME (ON/OFF)	---	(1)
T1: TRANSFER MS TO GCP DAX A (ON/OFF)	---	(2)
T2: TRANSFER MS TO GCP DAX A (ON/OFF)	---	(2)
T1: TRANSFER MS TO GCP DAX B (ON/OFF)	---	(2)
T2: TRANSFER MS TO GCP DAX B (ON/OFF)	---	(2)
T1: TRANSFER MS TO GCP DAX C (ON/OFF)	---	(2)
T2: TRANSFER MS TO GCP DAX C (ON/OFF)	---	(2)
T1: TRANSFER MS TO GCP DAX D (ON/OFF)	---	(2)
T2: TRANSFER MS TO GCP DAX D (ON/OFF)	---	(2)
T1: PRIME PREDICTION OFFSET (0 = OFF)	2664 Ft	
T2: PRIME PREDICTION OFFSET (0 = OFF)	3656 Ft	
PICKUP DELAY PRIME	15 Sec	
PICKUP DELAY DAX A	-- Sec	
PICKUP DELAY DAX B	-- Sec	
PICKUP DELAY DAX C	-- Sec	
PICKUP DELAY DAX D	-- Sec	
T1: ENHANCED DETECTION (ON/OFF)	OFF	
T2: ENHANCED DETECTION (ON/OFF)	---	
BACK-TO-BACK T1 AND T2 (NO/YES)	---	(3)
T1: STATION STOP TIMER	10 Sec	(3)
T2: STATION STOP TIMER	10 Sec	(3)
T1: NUMBER OF TRACK WIRES (4/6)	6	
T2: NUMBER OF TRACK WIRES (4/6)	6	
T1: LOW EX ADJUSTMENT	0	
T2: LOW EX ADJUSTMENT	0	
T1: LOW EZ DETECTION	OFF	
T2: LOW EZ DETECTION	OFF	
T1: LOW EZ DETECTION TIMER (ON/OFF)	10 Min	(4)
T2: LOW EZ DETECTION TIMER (ON/OFF)	10 Min	(4)
T1: POSITIVE START (EZ LEVEL) (0 = OFF)	0	
T2: POSITIVE START (EZ LEVEL) (0 = OFF)	0	
T1: POSITIVE START TIMEOUT (0 = NONE)	-- Min	(5)
T2: POSITIVE START TIMEOUT (0 = NONE)	-- Min	(5)
SET AT OPERATION (NORMAL/DIAGNOSTIC)	NORMAL	
DIAGNOSTIC MESSAGES (ON/OFF)	ON	
DAX MESSAGES (ON/OFF)	ON	
ADVANCE PREEMPT TIMER (0 = OFF)	0	
T1: MOTION SENSING LEVEL (0 = NORMAL)	0 %	
T2: MOTION SENSING LEVEL (0 = NORMAL)	0 %	

3000D2 PROGRAMMING NOTES:

1) AVAILALBE WHEN "TRANSFER DELAY MS TO GCP" AND "PRIME PREDICTION OFFSET" IS ON
2) AVAILABLE WHEN "TRANSFER DELAY MS TO GCP" AND DAX DISTANCE IS GREATER THAN ZERO
3) AVAILABLE WHEN "ENHANCED DETECTION" IS ON
4) AVAILABLE WHEN "LOW EZ DETECTION" IS ON
5) AVAILABLE WHEN "POSITIVE START" IS ON

✳ = 1ST SLOT AT LEFT END OF BAY

MODEL 3000 GCP MODULE ASSEMBLIES											
UPPER BAY											
MODULES POSITION	M1	M2	M3	M4	M5	M6	M7	M8	M9	M10
MODULE NUMBERS	80211-f(1) ✳ ISL	80211-f(2) ISL	80012 T/R 1	80012 T/R 2	80013 RLY DRV	80214 PROCS	80255 REC-INTF	80016 (1) DAX	80016 (2) DAX	80020 +80017
MODULES USED			X	X	X	X				X

NOTES:
1 - SEE IPI INSTRUCTION AND INSTALLATION MANUAL FOR 80211 ISLAND CALIBRATION PROCEDURE.

2 - TOGGLE SWITCH ON MOTHER BOARD:
UP = DUAL FREQ.
DOWN = SINGLE FREQ.

~~DD~~ = IN
~~UU~~ = OUT
CP
12-1-06

PANEL "A5" 3000 GCP SET-UP

DESIGNED BY: DBS 12-03-06	NORFOLK SOUTHERN		
DRAWN BY: IRE 12-03-06	OFFICE OF ASS'T. VICE PRESIDENT COMM. & SIGNAL, ATLANTA, GA.	M.P.: CD-295.20	
CHECKED BY: RDO 12-05-06	TOLEDO, OH REMOTE DAX HOUSE AT HOLLAND-SYLVANIA RD.		
IN SERVICE: - -	CHICAGO LINE	FILE No. R-	
	CADD or DWG. No. 36002952.09	SHEET No. 9 of 15	

REVISION INITIALS

PROPERTY PENNSYLVANIA R.R.

LEFT TWO ROWS TERMINAL BOARD 1

"1A" "1B"

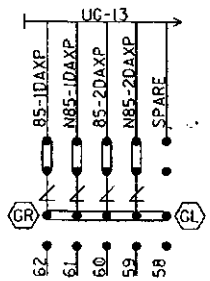

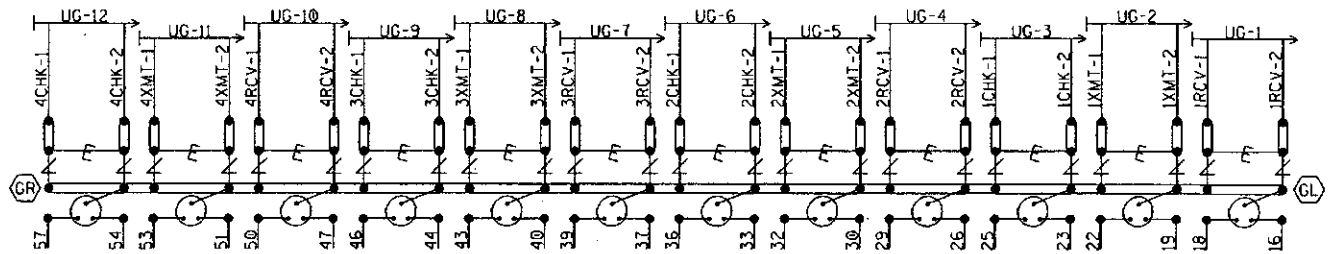

NOTE: INSTALL TEST LINKS ON ALL TRACK WIRES AND ON ALL LOW VOLTAGE UNDERGROUND CABLE TERMINATIONS.

= Heavy Duty Equalizer (022700-1X)

Clearview = Lightning Arrester (022585-1X)

= LPC-10560-51

SEE FARADAY SHIELD DETAILS - 1A & 1B FOR HOW THIS PORTION OF THE FARADAY SHIELD IS PREDRILLED. ONLY INSTALL AND USE THE TERMINALS NEEDED.

GR / GL = TERMINALS GROUNDED TO SHIELD. 4 POST BLOCKS USE EITHER - GR - SERMMI PART NO. 61278 GL - SERMMI PART NO. 61278-1.

BACKBOARD DETAIL - 1A & 1B

DESIGNED BY: DBS 12-03-06	NORFOLK SOUTHERN		
DRAWN BY: IRE 12-03-06	OFFICE OF ASS'T. VICE PRESIDENT COMM. & SIGNAL, ATLANTA, GA.	M.P.: CD-295.20	
CHECKED BY: RDO 12-05-06	TOLEDO, OH REMOTE DAX HOUSE AT HOLLAND-SYLVANIA RD.		
IN SERVICE: - -	CHICAGO LINE	FILE No. R-	
	CADD or DWG. No. 36002952.10	SHEET No. 10 of 15	

REVISION INITIALS										

PROPERTY PENNSYLVANIA R.R.

NOTE: IF THE FARADAY SHIELD WOULD EVER NEED TO BE DRILLED IN THE FIELD, PROPER PRECAUTIONS MUST BE TAKEN TO INSURE METAL SHAVINGS DO NOT GET INTO EXISTING TERMINALS/WIRES.

AREA BELOW IS SCALED WITH AS=.75

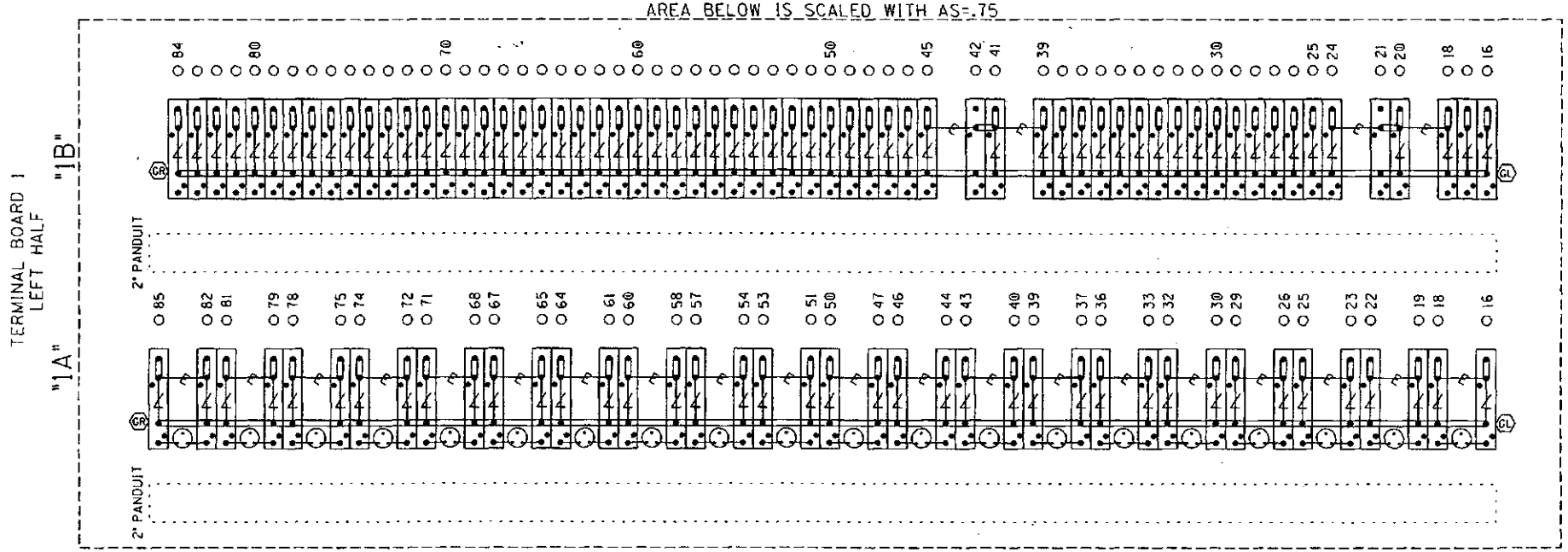

= Heavy Duty Equalizer (022700-1X)

Clearview = Lightning Arrester (022585-1X)

= LPC-10560-51

TERMINAL BOARD 1
LEFT TWO ROWS
FARADAY SHIELD DETAIL - 1A & 1B

= INDICATES PLACEMENT OF PANDUIT

THIS SHEET IS FOR REFERENCE ONLY, TO REFLECT HOW THE FARADAY SHIELD IS PREDRILLED. ONLY INSTALL AND USE THE TERMINALS NEEDED.

GR / GL = TERMINALS GROUNDED TO SHIELD. 4 POST BLOCKS USE EITHER - GR - SERMMI PART NO. 61278 GL - SERMMI PART NO. 61278-1.

DESIGNED BY: DBS 12-03-06	NORFOLK SOUTHERN		
DRAWN BY: IRE 12-03-06	OFFICE OF ASS'T. VICE PRESIDENT COMM. & SIGNAL, ATLANTA, GA.	M.P.: CD-295.20	
CHECKED BY: RDO 12-05-06	TOLEDO, OH REMOTE DAX HOUSE AT HOLLAND-SYLVANIA RD.		
IN SERVICE: - -	CHICAGO LINE	FILE No. R-	
	CADD or DWG. No. 36002952.11	SHEET No. 11 of 15	

REVISION INITIALS

PROPERTY PENNSYLVANIA R.R.

NOTE: IF THE FARADAY SHIELD WOULD EVER NEED TO BE DRILLED IN THE FIELD, PROPER PRECAUTIONS MUST BE TAKEN TO INSURE METAL SHAVINGS DO NOT GET INTO EXISTING TERMINALS/WIRES.

AREA BELOW IS SCALED WITH AS=.75

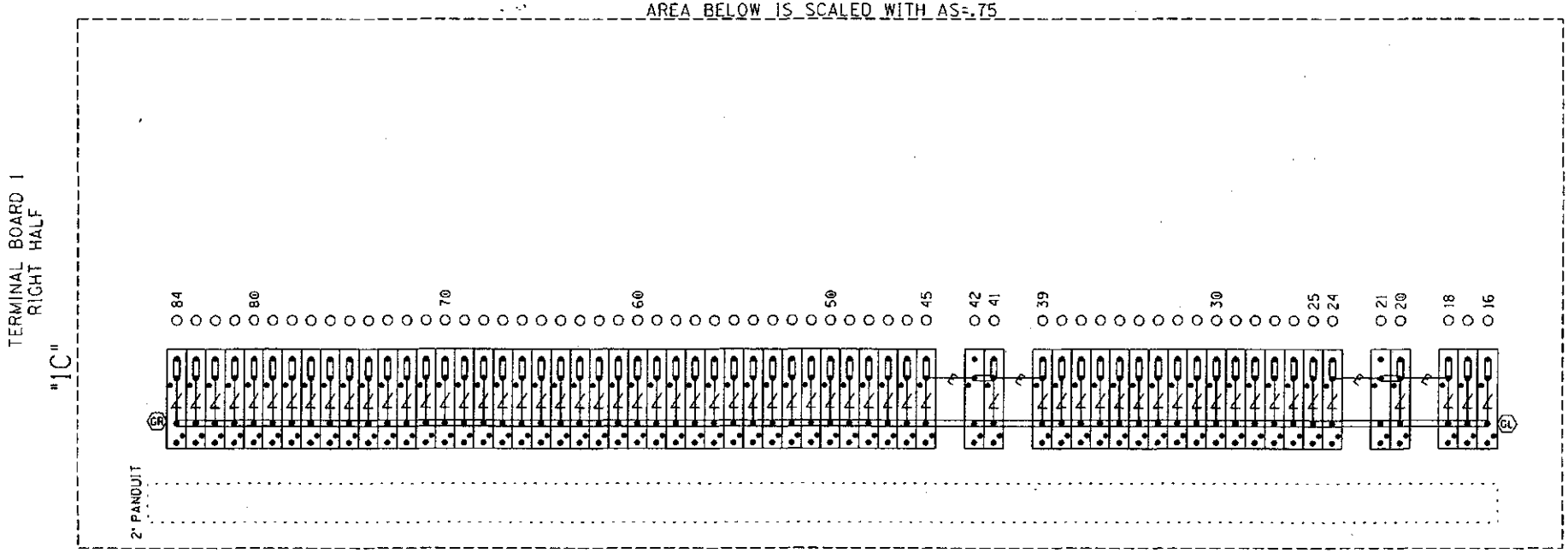

= Heavy Duty Equalizer (022700-1X)

Clearview = Lightning Arrester (022585-1X)

= LPC-10560-51

TERMINAL BOARD 1
RIGHT ROW
FARADAY SHIELD DETAIL - 1C

= INDICATES PLACEMENT OF PANDUIT

THIS SHEET IS FOR REFERENCE ONLY. TO REFLECT HOW THE FARADAY SHIELD IS PREDRILLED. ONLY INSTALL AND USE THE TERMINALS NEEDED.

GR / GL = TERMINALS GROUNDED TO SHIELD.
4 POST BLOCKS USE EITHER -
GR - SERMMI PART NO. 61278
GL - SERMMI PART NO. 61278-1.

DESIGNED BY: DBS 12-03-06	NORFOLK SOUTHERN		
DRAWN BY: IRE 12-03-06	OFFICE OF ASS'T. VICE PRESIDENT COMM. & SIGNAL, ATLANTA, GA.	M.P.: CD-295.20	
CHECKED BY: RDO 12-05-06	TOLEDO, OH REMOTE DAX HOUSE AT HOLLAND-SYLVANIA RD.		
IN SERVICE: - -	CHICAGO LINE	FILE No. R-	
	CADD or DWG. No. 36002952.12	SHEET No. 12 of 15	

REVISION INITIALS										

PROPERTY
PENNSYLVANIA R.R.

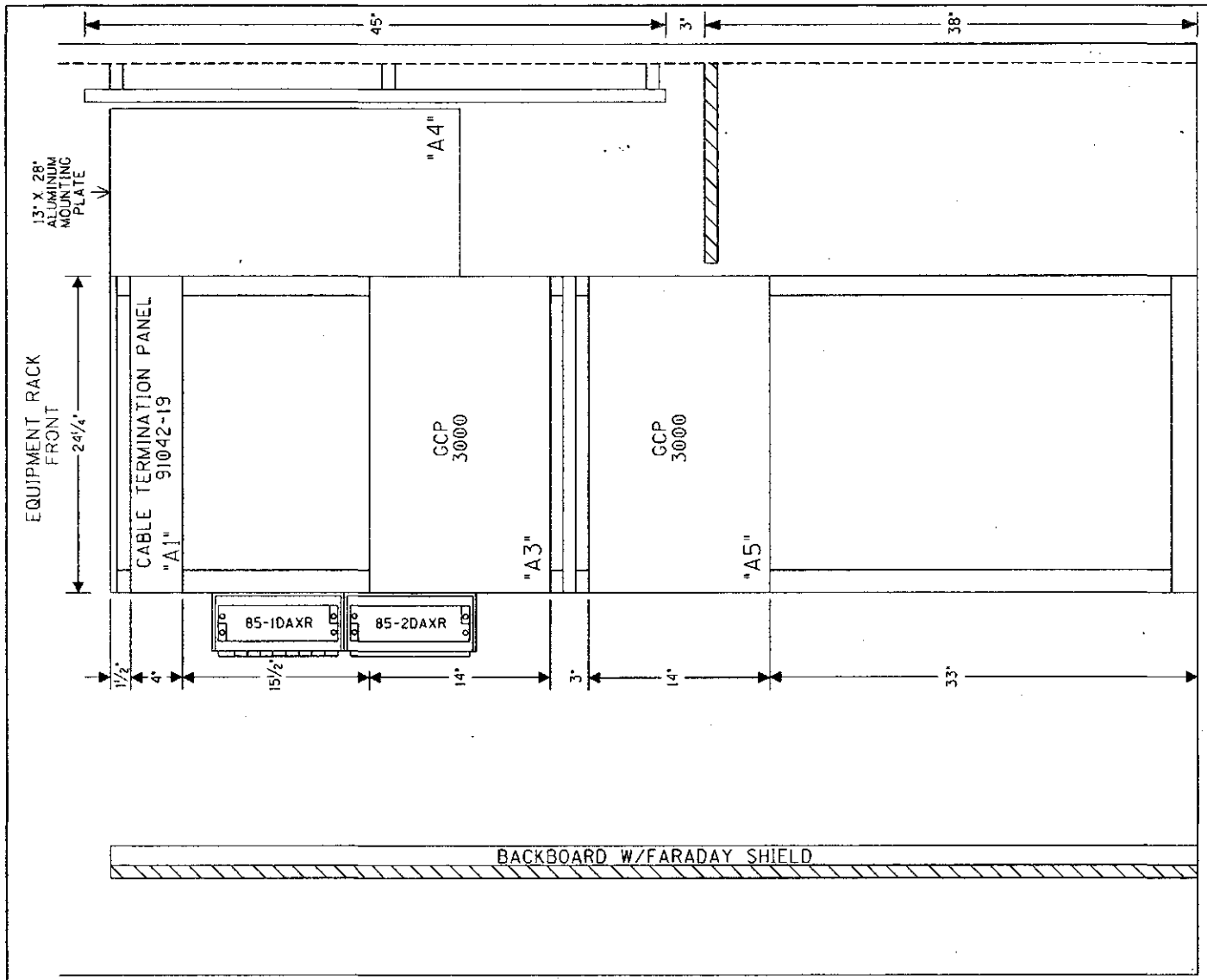

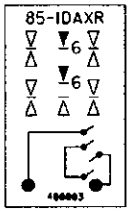

SAFETRAN, ALSTOM(GRS) RELAY CROSS REFERENCE LIST

SAFETRAN		ALSTOM(GRS)
400003	–	A62-308

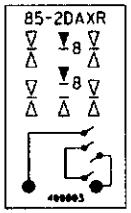

SAFETRAN, ALSTOM(GRS) RELAY CROSS REFERENCE LIST

SAFETRAN		ALSTOM(GRS)
400003	–	A62-308

SIDE "C"

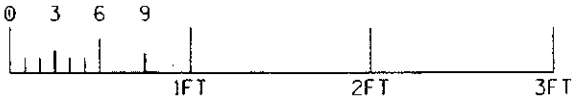

RACK PLACEMENT
6' X 6' HOUSE - SIDE "C"

DESIGNED BY: DBS 12-03-06	NORFOLK SOUTHERN		
DRAWN BY: IRE 12-03-06	OFFICE OF ASS'T. VICE PRESIDENT COMM. & SIGNAL, ATLANTA, GA.	M.P.: CD-295.20	
CHECKED BY: RDO 12-05-06	TOLEDO, OH REMOTE DAX HOUSE AT HOLLAND-SYLVANIA RD.		
IN SERVICE: - -	CHICAGO LINE	FILE No. R-	
	CADD or DWG. No. 36002952.13	SHEET No. 13 of 15	

REVISION INITIALS										PROPERTY PENNSYLVANIA R.R.

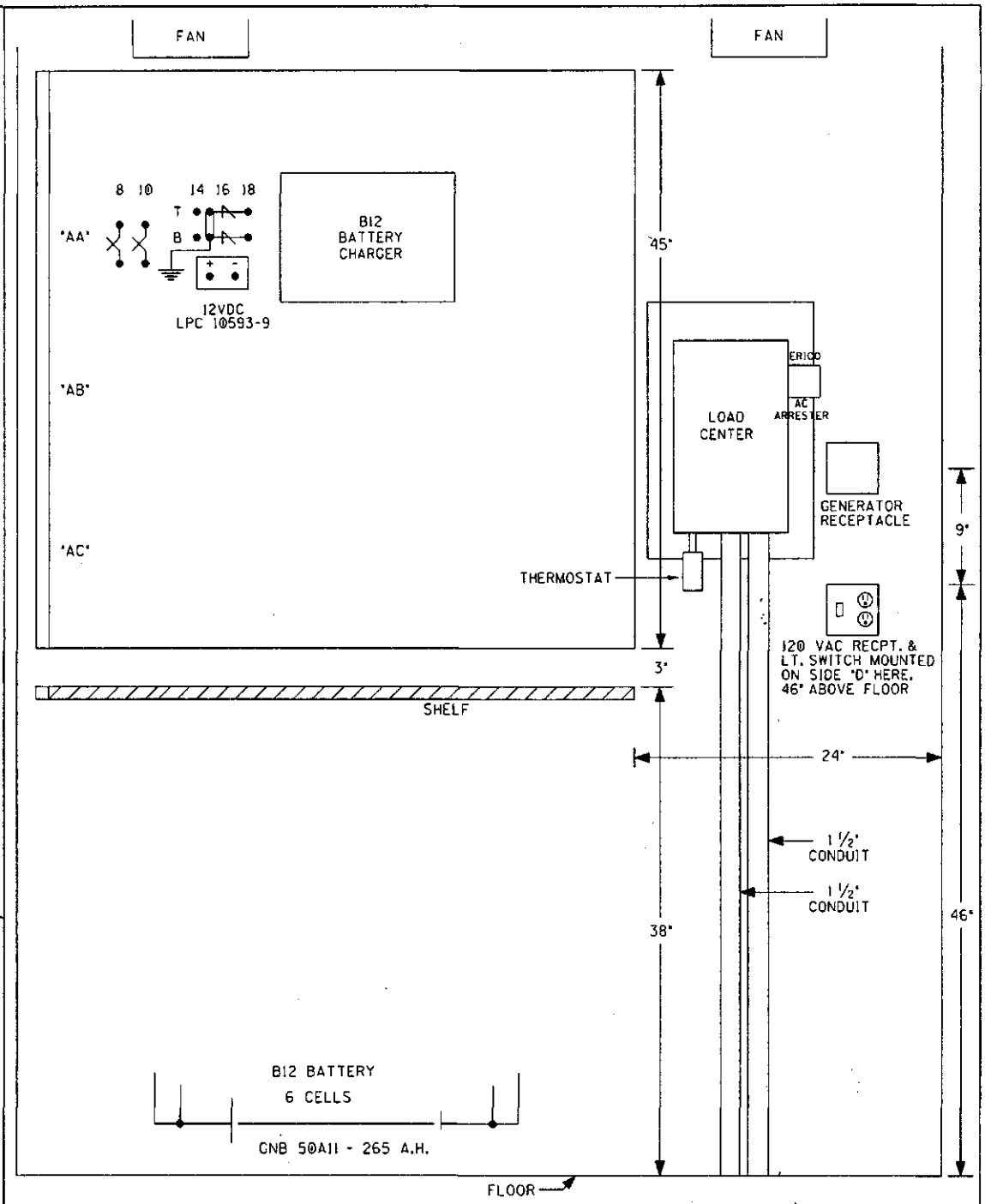

SIDE "A"

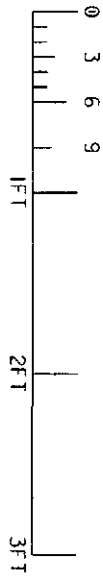

6' X 6' HOUSE - SIDE "A"

REVISION INITIALS

PROPERTY
PENNSYLVANIA R.R.

DESIGNED BY: DBS 12-03-06	NORFOLK SOUTHERN
DRAWN BY: IRE 12-03-06	OFFICE OF ASS'T. VICE PRESIDENT COMM. & SIGNAL, ATLANTA, GA.
CHECKED BY: RDO 12-05-06	M.P.: CD-295.20
IN SERVICE: - -	REMOTE DAX HOUSE AT HOLLAND-SYLVANIA RD. TOLEDO, OH
CADD or DWG. No. 36002952.14	CHICAGO LINE
FILE No. R-	SHEET No. 14 of 15

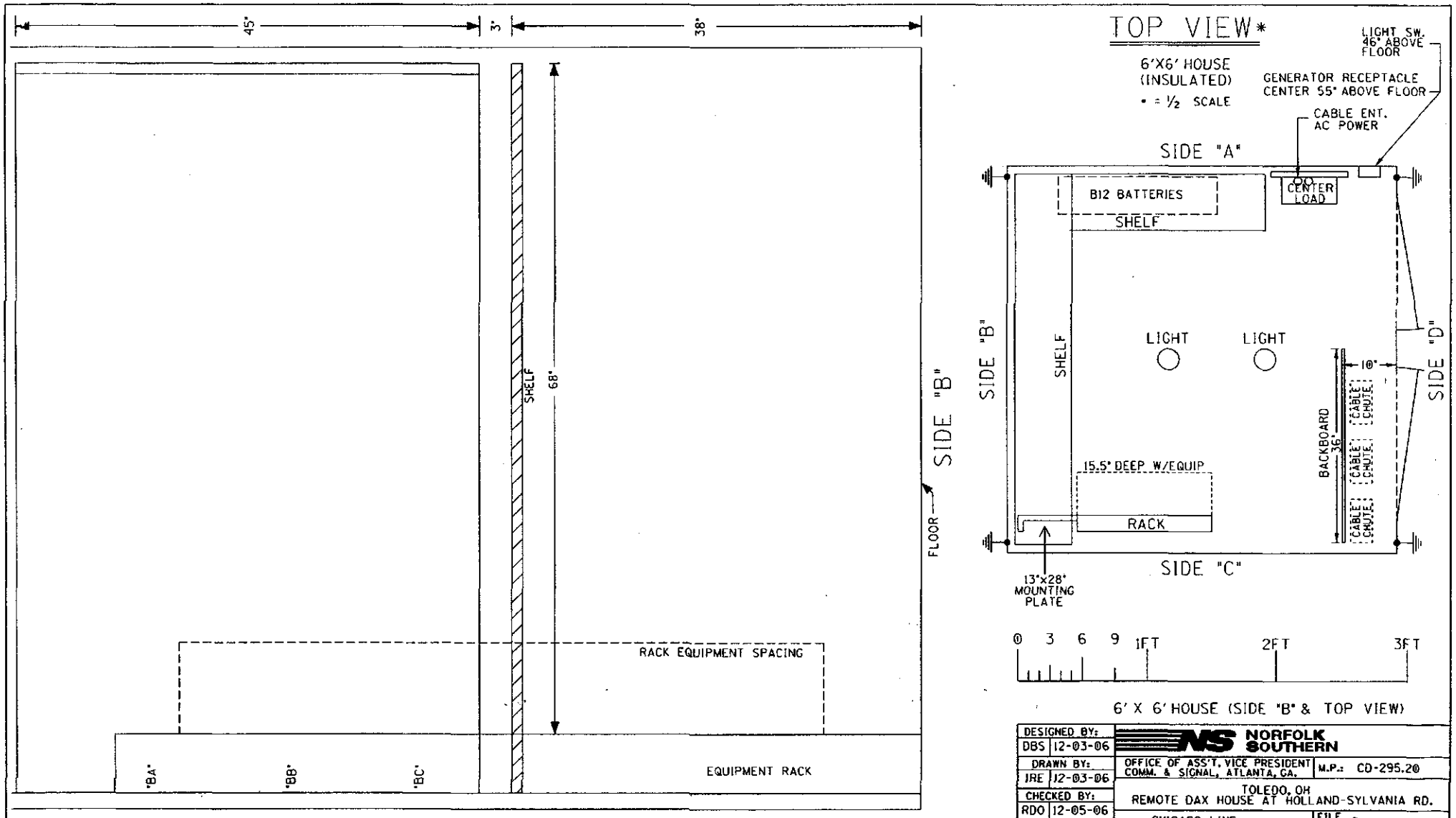

DESIGNED BY: DBS 12-03-06	NORFOLK SOUTHERN		
DRAWN BY: JRE 12-03-06	OFFICE OF ASS'T. VICE PRESIDENT COMM. & SIGNAL, ATLANTA, GA.	M.P.: CD-295.20	
CHECKED BY: RDO 12-05-06	TOLEDO, OH REMOTE DAX HOUSE AT HOLLAND-SYLVANIA RD.		
IN SERVICE: - -	CHICAGO LINE	FILE No. R-	
	CADD or DWG. No. 36002952.15	SHEET No. 15 of 15	

REVISION INITIALS

PROPERTY PENNSYLVANIA R.R.

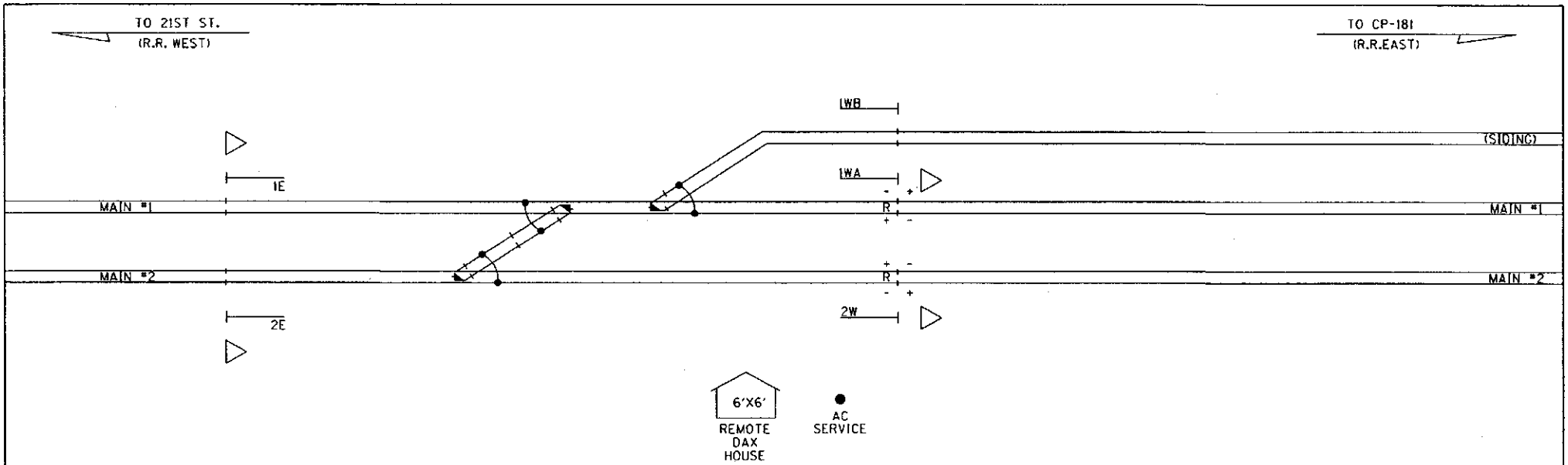

NOTES:

1. MAX. TRAIN SPEED: MAIN-79 M.P.H., SIDING-25 M.P.H.
2. LOCATE U/G UTILITIES & CABLE BEFORE DIGGING.
3. FIELD TO VERIFY PLACEMENT OF UNIDIRECTIONAL SHELTER.

IN SERVICE_____ SIGNED _____ DATE

- ☐ S&E ENGINEERING COPY
- ☐ CONSTRUCTION OFFICE COPY
  RETURN TO S&E ENG. AFTER COMPLETION
- ☐ FIELD COPY
  RETURN TO CASE AFTER COMPLETION
- ☐ PROJECT ENGINEER COPY

NOT TO SCALE
PROJECT #10.0014

UNIDIRECTIONAL LAYOUT

FILE No. 061-10.0800

DESIGNED BY: DBS	12-03-06
DRAWN BY: IRE	12-03-06
CHECKED BY: RDO	12-05-06
IN SERVICE:	- -

NORFOLK SOUTHERN

OFFICE OF ASS'T. VICE PRESIDENT COMM. & SIGNAL, ATLANTA, GA.

M.P.: CD-295.20

TOLEDO, OH
REMOTE DAX HOUSE AT HOLLAND-SYLVANIA RD.

CHICAGO LINE

FILE No. R-

CADD or DWG. No. 36002952.01

SHEET No. 1 of 15

REVISION INITIALS

PROPERTY
PENNSYLVANIA R.R.

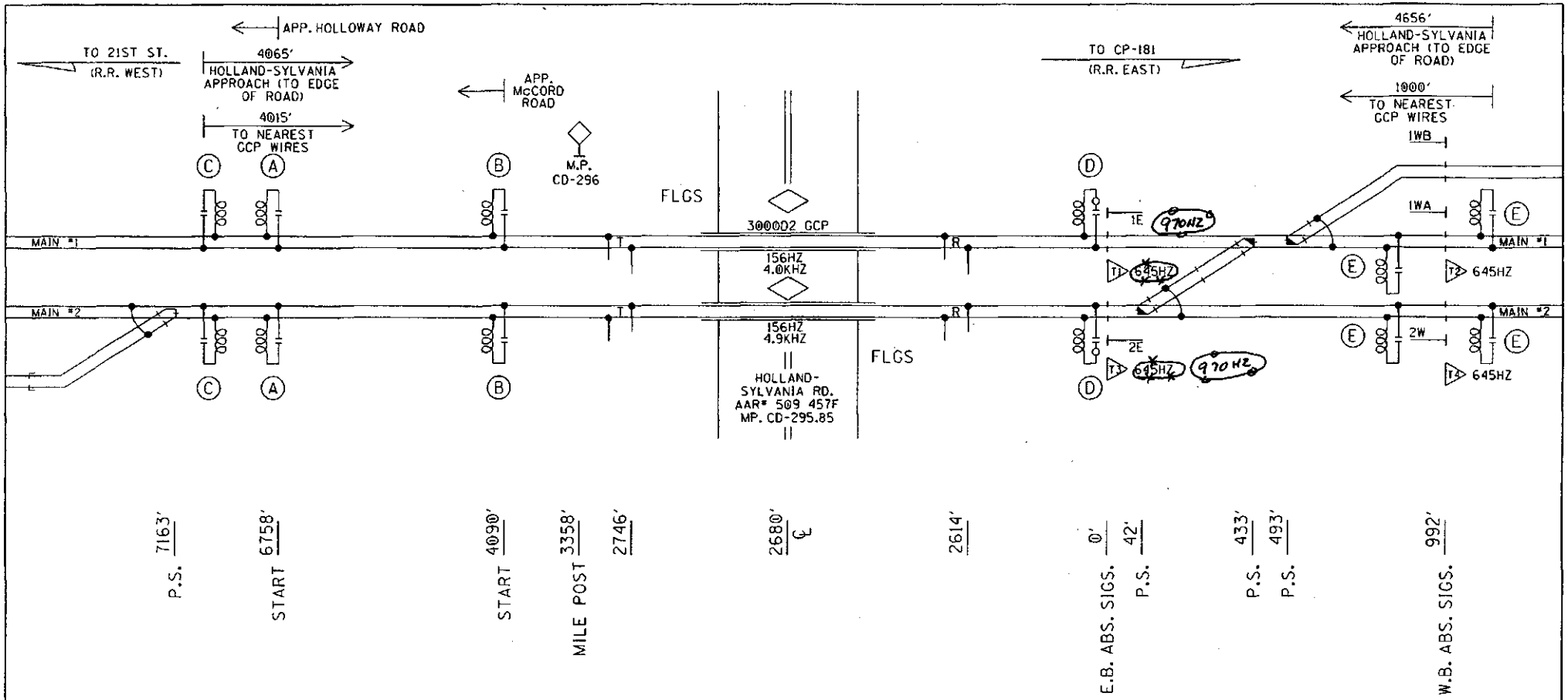

(A)- SAFE. CUSTOM SHUNT (249HZ)

(B)- SAFE. 62775 (86HZ)

(C)- MF NBS 62775-8221 (156HZ)

(D)- MF NBS 62775-8221 (156HZ) WITH SAFETRAN 8V617-1400

(E)- MF NBS 62775-3497 (645HZ)

~~OD~~ = IN
~~RX~~ = OUT
CP
12-11-06

PROFILE

DESIGNED BY: DBS 12-03-06	NORFOLK SOUTHERN		
DRAWN BY: IRE 12-03-06	OFFICE OF ASS'T. VICE PRESIDENT COMM. & SIGNAL, ATLANTA, GA.	M.P.: CD-295.20	
CHECKED BY: RDO 12-05-06	TOLEDO, OH FLGS AT HOLLAND-SYLVANIA RD.		
IN SERVICE: - -	CHICAGO LINE	FILE No. R-	
	CADD or DWG. No. 36002952.02	SHEET No. 2 of 15	

REVISION INITIALS											PROPERTY PENNSYLVANIA R.R.

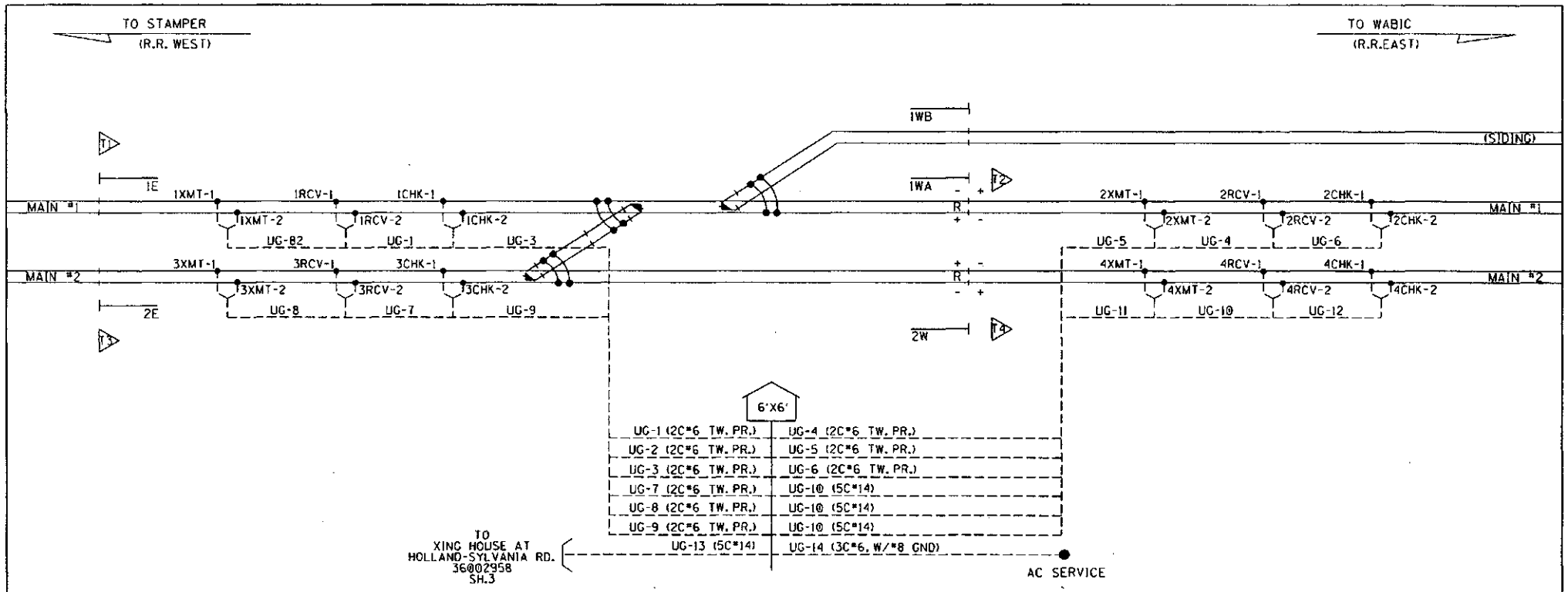

UG-1-TW. PR. *6
1RCV-1
1RCV-2

UG-2-TW. PR. *6
1XMT-1
1XMT-2

UG-3-TW. PR. *6
1CHK-1
1CHK-2

UG-4-TW. PR. *6
2RCV-1
2RCV-2

UG-5-TW. PR. *6
2XMT-1
2XMT-2

UG-6-TW. PR. *6
2CHK-1
2CHK-2

UG-7-TW. PR. *6
3RCV-1
3RCV-2

UG-8-TW. PR. *6
3XMT-1
3XMT-2

UG-9-TW. PR. *6
3CHK-1
3CHK-2

UG-10-TW.PR.*6
4RCV-1
4RCV-2

UG-11-TW.PR.*6
4XMT-1
4XMT-2

UG-12-TW.PR.*6
4CHK-1
4CHK-2

UG-13-5CUG *14
85-1DAXP
N85-1DAXP
85-2DAXP
N85-2DAXP
SPARE

UG-14-3CUG *6 W/*8 GND
BX120-A
BX120-B
NX120
GND

DESIGNED BY: DBS 12-03-06	NORFOLK SOUTHERN	
DRAWN BY: IRE 12-03-06	OFFICE OF ASS'T. VICE PRESIDENT COMM. & SIGNAL, ATLANTA, GA.	M.P.: CD-295.20
CHECKED BY: RDO 12-05-06	TOLEDO, OH REMOTE DAX HOUSE AT HOLLAND-SYLVANIA RD.	
IN SERVICE: - -	CHICAGO LINE	FILE No. R-
	CADD or DWG. No. 36002952.03	SHEET No. 3 of 15

REVISION INITIALS										

PROPERTY
PENNSYLVANIA R.R.

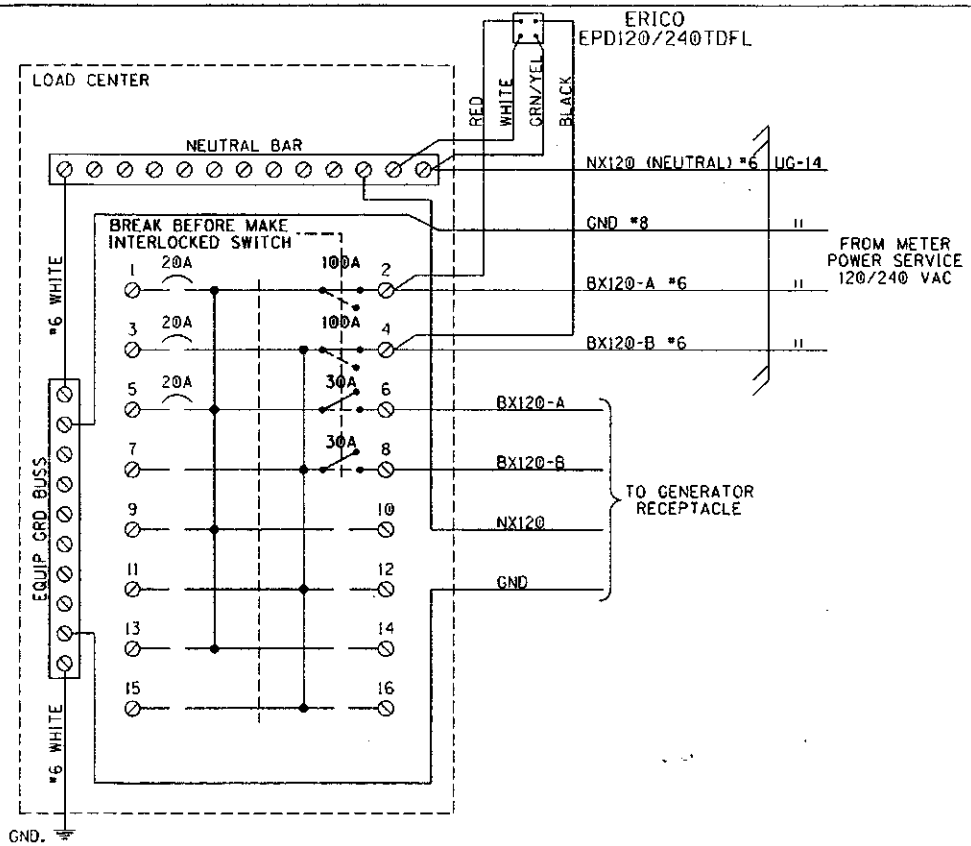

NOTE: ALL AC WIRING IS TO BE IN METALLIC CONDUIT WITH NO EXPOSED TERMINALS. ALL AC 120V AND 240V EQUIPMENT IS TO BE PROPERLY GROUNDED.

SQUARE "D" PART NUMBERS:

LOAD CENTER——QO112L125G
100A 2P CIR BKR—QO2100
30A 2P CIR BKR——QO230
MECH INTERLOCK——PK4DTIM4LA

GENERATOR RECEPTACLE:
MALE CONNECTOR - NEMA L530-F1

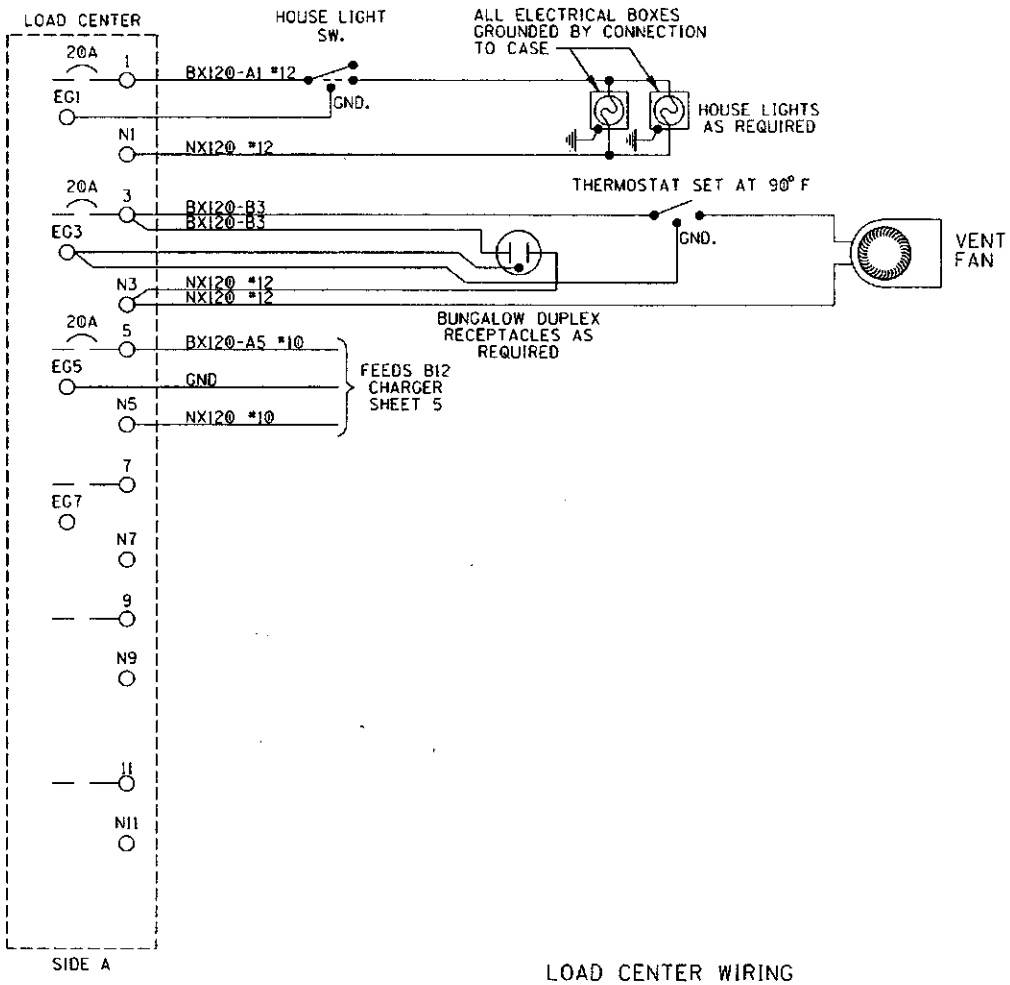

LOAD CENTER WIRING

DESIGNED BY: DBS 12-03-06	NORFOLK SOUTHERN	
DRAWN BY: IRE 12-03-06	OFFICE OF ASS'T. VICE PRESIDENT COMM. & SIGNAL, ATLANTA, GA.	M.P.: CD-295.20
CHECKED BY: RDO 12-05-06	TOLEDO, OH REMOTE DAX HOUSE AT HOLLAND-SYLVANIA RD.	
IN SERVICE: - -	CHICAGO LINE	FILE No. R-
	CADD or DWG. No. 36002952.04	SHEET No. 4 of 15

REVISION INITIALS

PROPERTY
PENNSYLVANIA R.R.

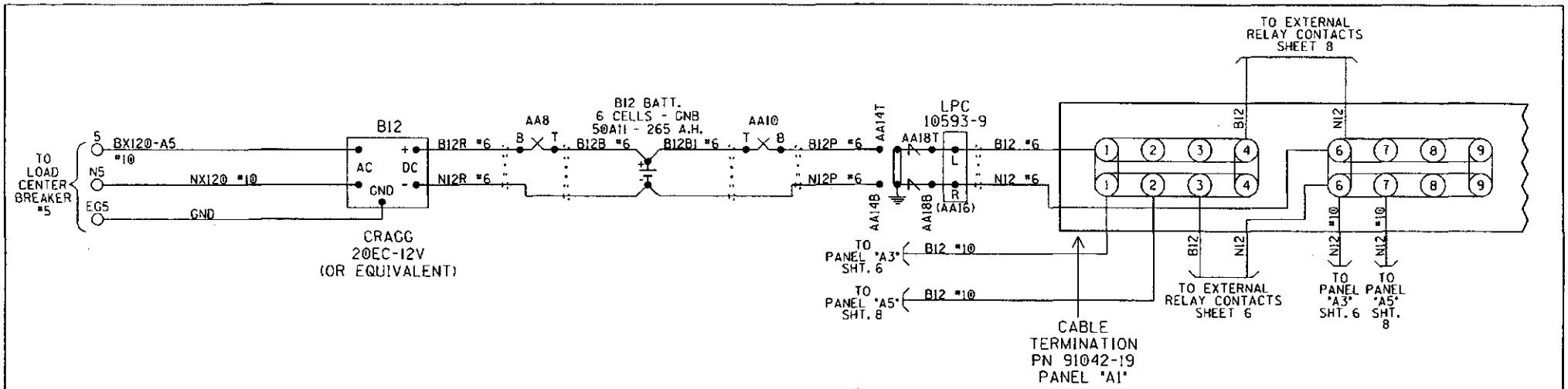

NOTES:
ALL WIRING TO BE #16AWG
UNLESS NOTED OTHERWISE.

* = CABLE PROVIDED WITH SEAR II

= TWIST BATTERY LEADS

PANEL "A1" CABLE TERMINATION PANEL
B12 RECTIFIER HOOK-UP

DESIGNED BY: DBS 12-03-06	NORFOLK SOUTHERN	
DRAWN BY: IRE 12-03-06	OFFICE OF ASS'T. VICE PRESIDENT COMM. & SIGNAL, ATLANTA, GA.	M.P.: CD-295.20
CHECKED BY: RDO 12-05-06	TOLEDO, OH REMOTE DAX HOUSE AT HOLLAND-SYLVANIA RD.	
IN SERVICE: - -	CHICAGO LINE	FILE No. R-
	CADD or DWG. No. 36002952.05	SHEET No. 5 of 15

REVISION INITIALS										

PROPERTY
PENNSYLVANIA R.R.

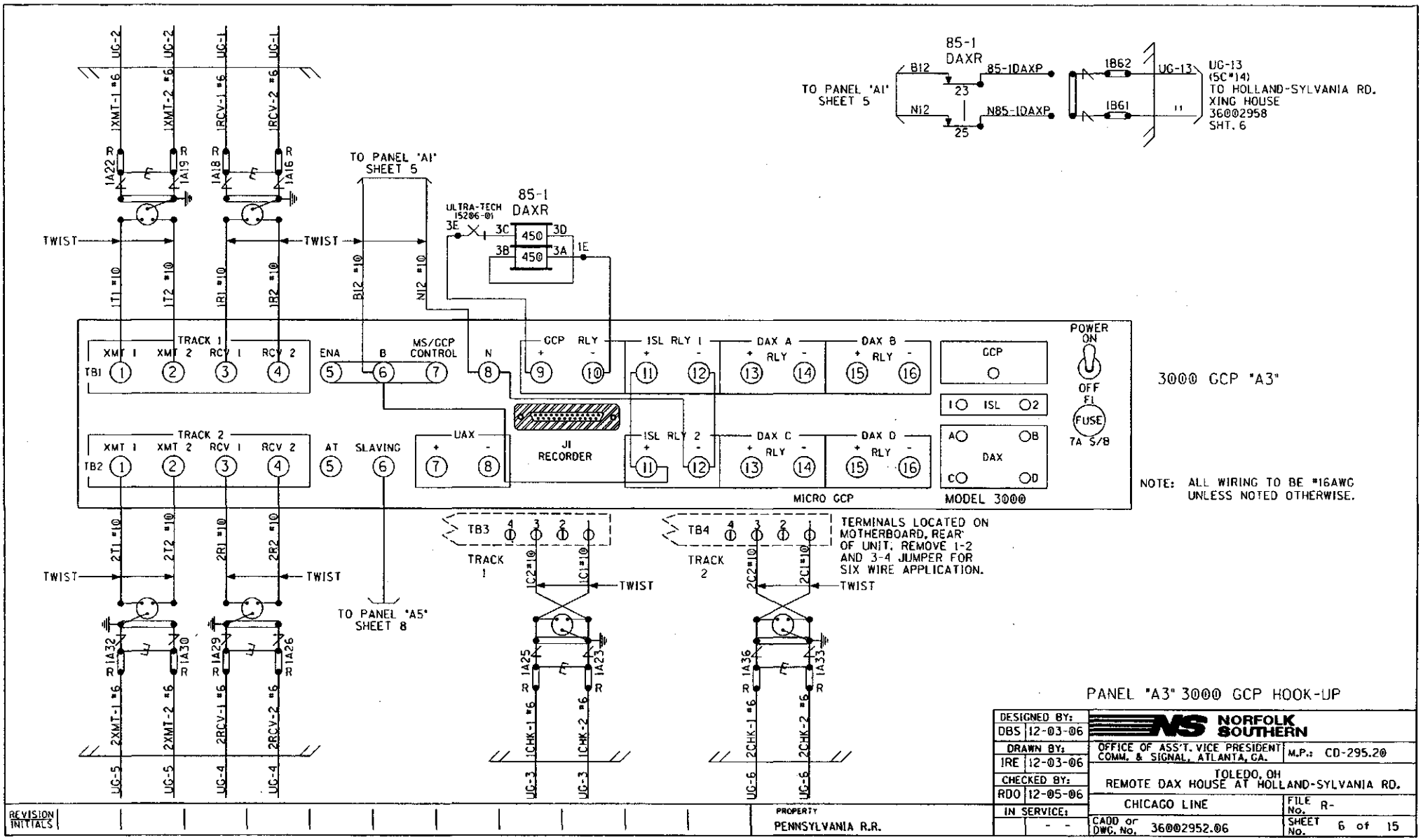
85-1 DAXR
TO PANEL 'A1' SHEET 5
B12
N12
85-1DAXP
N85-1DAXP
23
25
1B62
1B61
UG-13
UG-13 (5C*14) TO HOLLAND-SYLVANIA RD. XING HOUSE 36002958 SHT. 6
UG-2
UG-1
1XMT-1 #6
1XMT-2 #6
1RCV-1 #6
1RCV-2 #6
1A22
1A19
1A18
1A16
TWIST
1T1 #10
1T2 #10
1R1 #10
1R2 #10
B12 #10
N12 #10
ULTRA-TECH 15206-01
3E
3C
3D
3B
3A
1E
450
TRACK 1
XMT 1
XMT 2
RCV 1
RCV 2
TB1
ENA
B
MS/GCP CONTROL
N
GCP RLY
ISL RLY 1
DAX A RLY
DAX B RLY
GCP
POWER ON
OFF
F1
FUSE
7A S/B
3000 GCP "A3"
TRACK 2
TB2
AT
SLAVING
UAX
JI RECORDER
ISL RLY 2
DAX C RLY
DAX D RLY
ISL
DAX
MICRO GCP
MODEL 3000
NOTE: ALL WIRING TO BE #16AWG UNLESS NOTED OTHERWISE.
2T1 #10
2T2 #10
2R1 #10
2R2 #10
TO PANEL "A5" SHEET 8
TB3
TB4
TRACK 1
TRACK 2
TERMINALS LOCATED ON MOTHERBOARD, REAR OF UNIT. REMOVE 1-2 AND 3-4 JUMPER FOR SIX WIRE APPLICATION.
1C2#10
1C1#10
2C2#10
2C1#10
1A32
1A30
1A29
1A26
1A25
1A23
1A36
1A33
2XMT-1 #6
2XMT-2 #6
2RCV-1 #6
2RCV-2 #6
1CHK-1 #6
1CHK-2 #6
2CHK-1 #6
2CHK-2 #6
UG-5
UG-4
UG-3
UG-6
PANEL "A3" 3000 GCP HOOK-UP
DESIGNED BY: DBS 12-03-06
DRAWN BY: IRE 12-03-06
CHECKED BY: RDO 12-05-06
IN SERVICE: - -
NORFOLK SOUTHERN
OFFICE OF ASS'T. VICE PRESIDENT COMM. & SIGNAL, ATLANTA, GA.
M.P.: CD-295.20
TOLEDO, OH
REMOTE DAX HOUSE AT HOLLAND-SYLVANIA RD.
CHICAGO LINE
FILE No. R-
CADD or DWG. No. 36002952.06
SHEET No. 6 of 15
REVISION INITIALS
PROPERTY
PENNSYLVANIA R.R.

3000 PROGRAMMING CHART	(LEVEL: J)
NUMBER OF TRACK TRANSCEIVERS	2
T1: FREQUENCY	~~645Hz~~ 470 HZ
T2: FREQUENCY	645Hz
T1: UNIDIRECTIONAL/BIDIRECTIONAL	UNI
T2: UNIDIRECTIONAL/BIDIRECTIONAL	UNI
T1: XMIT LEVEL (MAX/MED)	MED
T2: XMIT LEVEL (MAX/MED)	MED
T1: PREDICTOR/MOTION SENSOR	PRED
T2: PREDICTOR/MOTION SENSOR	PRED
T1: WARNING TIME	30 Sec
T2: WARNING TIME	30 Sec
T1: APPROACH DISTANCE	992 Ft
T2: APPROACH DISTANCE	1000 Ft
UAX1 PICKUP DELAY (UAX) (0 = OFF)	0 Sec
ENA/UAX2 DELAY (0 = ENA)	-- Sec
T1: ISLAND DISTANCE	N/A Ft
T2: ISLAND DISTANCE	N/A Ft
NUMBER OF DAX'S	0 Ea
DAX A TRACK ASSIGNMENT (T1/T2)	T1
DAX A DISTANCE (0 = PREEMPT)	Ft
DAX A WARNING TIME	Sec
DAX B TRACK ASSIGNMENT (T1/T2)	T2
DAX B DISTANCE (0 = PREEMPT)	Ft
DAX B WARNING TIME	Sec
DAX C TRACK ASSIGNMENT (T1/T2)	---
DAX C DISTANCE (0 = PREEMPT)	Ft
DAX C WARNING TIME	Sec
DAX D TRACK ASSIGNMENT (T1/T2)	---
DAX D DISTANCE (0 = PREEMPT)	Ft
DAX D WARNING TIME	Sec
SLAVING (MASTER/SLAVE)	MASTER
PASSWORD ENABLED	NO
RECORDER INSTALLED	NO

EXPANDED PROGRAMMING

T1: SWITCH TO MS (ENTER EZ VALUE)	0 %	
T2: SWITCH TO MS (ENTER EZ VALUE)	0 %	
T1: TRANSFER DELAY MS TO GCP (0 = OFF)	0 Sec	
T2: TRANSFER DELAY MS TO GCP (0 = OFF)	0 Sec	
T1: TRANSFER MS TO GCP PRIME (ON/OFF)	---	(1)
T2: TRANSFER MS TO GCP PRIME (ON/OFF)	---	(1)
T1: TRANSFER MS TO GCP DAX A (ON/OFF)	---	(2)
T2: TRANSFER MS TO GCP DAX A (ON/OFF)	---	(2)
T1: TRANSFER MS TO GCP DAX B (ON/OFF)	---	(2)
T2: TRANSFER MS TO GCP DAX B (ON/OFF)	---	(2)
T1: TRANSFER MS TO GCP DAX C (ON/OFF)	---	(2)
T2: TRANSFER MS TO GCP DAX C (ON/OFF)	---	(2)
T1: TRANSFER MS TO GCP DAX D (ON/OFF)	---	(2)
T2: TRANSFER MS TO GCP DAX D (ON/OFF)	---	(2)
T1: PRIME PREDICTION OFFSET (0 = OFF)	2664 Ft	
T2: PRIME PREDICTION OFFSET (0 = OFF)	3656 Ft	
PICKUP DELAY PRIME	15 Sec	
PICKUP DELAY DAX A	-- Sec	
PICKUP DELAY DAX B	-- Sec	
PICKUP DELAY DAX C	-- Sec	
PICKUP DELAY DAX D	-- Sec	
T1: ENHANCED DETECTION (ON/OFF)	OFF	
T2: ENHANCED DETECTION (ON/OFF)	OFF	
BACK-TO-BACK T1 AND T2 (NO/YES)	---	(3)
T1: STATION STOP TIMER	10 Sec	(3)
T2: STATION STOP TIMER	10 Sec	(3)
T1: NUMBER OF TRACK WIRES (4/6)	6	
T2: NUMBER OF TRACK WIRES (4/6)	6	
T1: LOW EX ADJUSTMENT	0	
T2: LOW EX ADJUSTMENT	0	
T1: LOW EZ DETECTION	OFF	
T2: LOW EZ DETECTION	OFF	
T1: LOW EZ DETECTION TIMER (ON/OFF)	10 Min	(4)
T2: LOW EZ DETECTION TIMER (ON/OFF)	10 Min	(4)
T1: POSITIVE START (EZ LEVEL) (0 = OFF)	0	
T2: POSITIVE START (EZ LEVEL) (0 = OFF)	0	
T1: POSITIVE START TIMEOUT (0 = NONE)	0 Min	(5)
T2: POSITIVE START TIMEOUT (0 = NONE)	0 Min	(5)
SET AT OPERATION (NORMAL/DIAGNOSTIC)	NORMAL	
DIAGNOSTIC MESSAGES (ON/OFF)	ON	
DAX MESSAGES (ON/OFF)	ON	
ADVANCE PREEMPT TIMER (0 = OFF)	0	
T1: MOTION SENSING LEVEL (0 = NORMAL)	0 %	
T2: MOTION SENSING LEVEL (0 = NORMAL)	0 %	

✱ = 1ST SLOT AT LEFT END OF BAY

MODEL 3000 CCP MODULE ASSEMBLIES										
UPPER BAY										
MODULES POSITION	M1	M2	M3	M4	M5	M6	M7	M8	M9	M10
MODULE NUMBERS	80211-f(1) ✱ ISL	80211-f(2) ISL	80012 T/R 1	80012 T/R 2	80013 RLY DRV	80214 PROCS	80255 REC-INTF	80016 (1) DAX	80016 (2) DAX	80020 +80017
MODULES USED			X	X	X	X				X

NOTES:

1-- SEE IPI INSTRUCTION AND INSTALLATION MANUAL FOR 80211 ISLAND CALIBRATION PROCEDURE.

2 - TOGGLE SWITCH ON MOTHER BOARD:
UP = DUAL FREQ.
DOWN = SINGLE FREQ.

~~DD~~ = IN
~~AX~~ = OUT
CP
12-11-06

3000 PROGRAMMING NOTES:

1) AVAILALBE WHEN "TRANSFER DELAY MS TO GCP" AND "PRIME PREDICTION OFFSET" IS ON
2) AVAILABLE WHEN "TRANSFER DELAY MS TO GCP" AND DAX DISTANCE IS GREATER THAN ZERO
3) AVAILABLE WHEN "ENHANCED DETECTION" IS ON
4) AVAILABLE WHEN "LOW EZ DETECTION" IS ON
5) AVAILABLE WHEN "POSITIVE START" IS ON

PANEL "A3" 3000 CCP SET-UP

DESIGNED BY: DBS 12-03-06	NORFOLK SOUTHERN	
DRAWN BY: IRE 12-03-06	OFFICE OF ASS'T. VICE PRESIDENT COMM. & SIGNAL, ATLANTA, GA.	M.P.: CD-295.20
CHECKED BY: RDO 12-05-06	TOLEDO, OH REMOTE DAX HOUSE AT HOLLAND-SYLVANIA RD.	
IN SERVICE: - -	CHICAGO LINE	FILE No. R-
	CADD or DWG. No. 36002952.07	SHEET No. 7 of 15

REVISION INITIALS

PROPERTY
PENNSYLVANIA R.R.

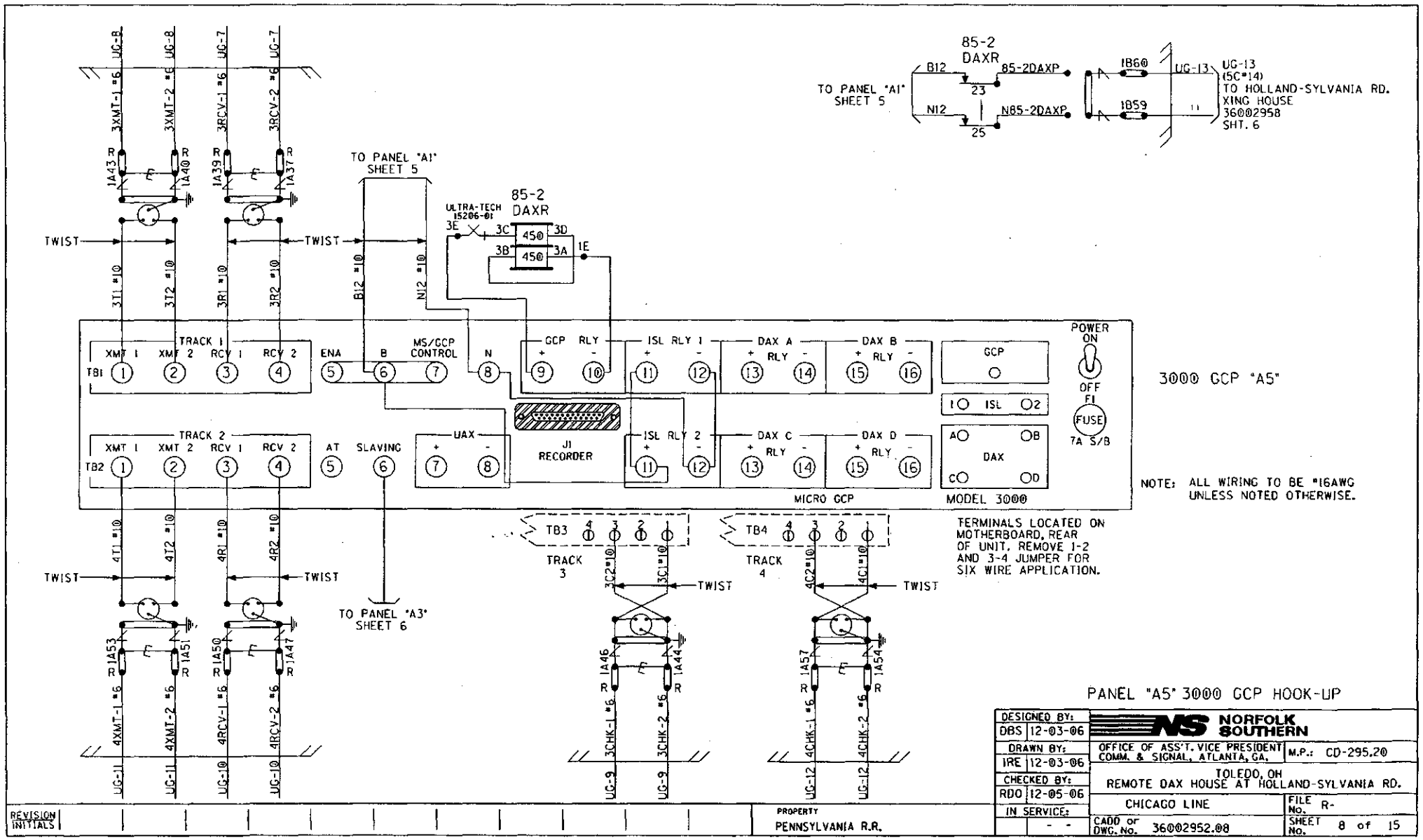
TO PANEL "A1" SHEET 5
85-2 DAXR
B12
N12
85-2DAXP
N85-2DAXP
23
25
1B60
1B59
UG-13
UG-13 (5C#14) TO HOLLAND-SYLVANIA RD. XING HOUSE 36002958 SHT. 6
UG-8
UG-7
3XMT-1 #6
3XMT-2 #6
3RCV-1 #6
3RCV-2 #6
1A43
1A40
1A39
1A37
TWIST
3T1 #10
3T2 #10
3R1 #10
3R2 #10
B12 #10
N12 #10
ULTRA-TECH 15206-01
3E
3C
3D
3B
3A
1E
450
TRACK 1
XMT 1
XMT 2
RCV 1
RCV 2
TB1
ENA
B
MS/GCP CONTROL
N
GCP
RLY
ISL RLY 1
DAX A
DAX B
TRACK 2
TB2
AT
SLAVING
UAX
J1 RECORDER
ISL RLY 2
DAX C
DAX D
MICRO GCP
MODEL 3000
POWER ON
OFF
F1
FUSE
7A S/B
ISL
DAX
3000 GCP "A5"
NOTE: ALL WIRING TO BE #16AWG UNLESS NOTED OTHERWISE.
TERMINALS LOCATED ON MOTHERBOARD, REAR OF UNIT. REMOVE 1-2 AND 3-4 JUMPER FOR SIX WIRE APPLICATION.
TO PANEL "A3" SHEET 6
TB3
TB4
TRACK 3
TRACK 4
3C2#10
3C1#10
4C2#10
4C1#10
4T1 #10
4T2 #10
4R1 #10
4R2 #10
1A53
1A51
1A50
1A47
1A46
1A44
1A57
1A54
4XMT-1 #6
4XMT-2 #6
4RCV-1 #6
4RCV-2 #6
3CHK-1 #6
3CHK-2 #6
4CHK-1 #6
4CHK-2 #6
UG-11
UG-10
UG-9
UG-12
REVISION INITIALS
PROPERTY
PENNSYLVANIA R.R.
PANEL "A5" 3000 GCP HOOK-UP
DESIGNED BY: DBS 12-03-06
DRAWN BY: IRE 12-03-06
CHECKED BY: RDO 12-05-06
IN SERVICE: - -
NORFOLK SOUTHERN
OFFICE OF ASS'T. VICE PRESIDENT COMM. & SIGNAL, ATLANTA, GA.
M.P.: CD-295.20
TOLEDO, OH
REMOTE DAX HOUSE AT HOLLAND-SYLVANIA RD.
CHICAGO LINE
FILE No. R-
CADD or DWG. No. 36002952.08
SHEET No. 8 of 15

3000D2 PROGRAMMING CHART	(LEVEL: J)
NUMBER OF TRACK TRANSCEIVERS	2
T1: FREQUENCY	* 645Hz 970 #2
T2: FREQUENCY	645Hz
T1: UNIDIRECTIONAL/BIDIRECTIONAL	UNI
T2: UNIDIRECTIONAL/BIDIRECTIONAL	UNI
T1: XMIT LEVEL (MAX/MED)	MED
T2: XMIT LEVEL (MAX/MED)	MED
T1: PREDICTOR/MOTION SENSOR	PRED
T2: PREDICTOR/MOTION SENSOR	PRED
T1: WARNING TIME	30 Sec
T2: WARNING TIME	30 Sec
T1: APPROACH DISTANCE	992 Ft
T2: APPROACH DISTANCE	1000 Ft
UAX1 PICKUP DELAY (UAX) (0 = OFF)	0 Sec
ENA/UAX2 DELAY (0 = ENA)	0 Sec
T1: ISLAND DISTANCE	NA Ft
T2: ISLAND DISTANCE	NA Ft
NUMBER OF DAX'S	0 Ea
DAX A TRACK ASSIGNMENT (T1/T2)	---
DAX A DISTANCE (0 = PREEMPT)	Ft
DAX A WARNING TIME	Sec
DAX B TRACK ASSIGNMENT (T1/T2)	---
DAX B DISTANCE (0 = PREEMPT)	Ft
DAX B WARNING TIME	Sec
DAX C TRACK ASSIGNMENT (T1/T2)	---
DAX C DISTANCE (0 = PREEMPT)	Ft
DAX C WARNING TIME	Sec
DAX D TRACK ASSIGNMENT (T1/T2)	---
DAX D DISTANCE (0 = PREEMPT)	Ft
DAX D WARNING TIME	Sec
SLAVING (MASTER/SLAVE)	SLAVE
PASSWORD ENABLED	NO
RECORDER INSTALLED	NO

EXPANDED PROGRAMMING

T1: SWITCH TO MS (ENTER EZ VALUE)	0 %	
T2: SWITCH TO MS (ENTER EZ VALUE)	0 %	
T1: TRANSFER DELAY MS TO GCP (0 = OFF)	0 Sec	
T2: TRANSFER DELAY MS TO GCP (0 = OFF)	0 Sec	
T1: TRANSFER MS TO GCP PRIME (ON/OFF)	---	(1)
T2: TRANSFER MS TO GCP PRIME (ON/OFF)	---	(1)
T1: TRANSFER MS TO GCP DAX A (ON/OFF)	---	(2)
T2: TRANSFER MS TO GCP DAX A (ON/OFF)	---	(2)
T1: TRANSFER MS TO GCP DAX B (ON/OFF)	---	(2)
T2: TRANSFER MS TO GCP DAX B (ON/OFF)	---	(2)
T1: TRANSFER MS TO GCP DAX C (ON/OFF)	---	(2)
T2: TRANSFER MS TO GCP DAX C (ON/OFF)	---	(2)
T1: TRANSFER MS TO GCP DAX D (ON/OFF)	---	(2)
T2: TRANSFER MS TO GCP DAX D (ON/OFF)	---	(2)
T1: PRIME PREDICTION OFFSET (0 = OFF)	2664 Ft	
T2: PRIME PREDICTION OFFSET (0 = OFF)	3656 Ft	
PICKUP DELAY PRIME	15 Sec	
PICKUP DELAY DAX A	-- Sec	
PICKUP DELAY DAX B	-- Sec	
PICKUP DELAY DAX C	-- Sec	
PICKUP DELAY DAX D	-- Sec	
T1: ENHANCED DETECTION (ON/OFF)	OFF	
T2: ENHANCED DETECTION (ON/OFF)	---	
BACK-TO-BACK T1 AND T2 (NO/YES)	---	(3)
T1: STATION STOP TIMER	10 Sec	(3)
T2: STATION STOP TIMER	10 Sec	(3)
T1: NUMBER OF TRACK WIRES (4/6)	6	
T2: NUMBER OF TRACK WIRES (4/6)	6	
T1: LOW EX ADJUSTMENT	0	
T2: LOW EX ADJUSTMENT	0	
T1: LOW EZ DETECTION	OFF	
T2: LOW EZ DETECTION	OFF	
T1: LOW EZ DETECTION TIMER (ON/OFF)	10 Min	(4)
T2: LOW EZ DETECTION TIMER (ON/OFF)	10 Min	(4)
T1: POSITIVE START (EZ LEVEL) (0 = OFF)	0	
T2: POSITIVE START (EZ LEVEL) (0 = OFF)	0	
T1: POSITIVE START TIMEOUT (0 = NONE)	-- Min	(5)
T2: POSITIVE START TIMEOUT (0 = NONE)	-- Min	(5)
SET AT OPERATION (NORMAL/DIAGNOSTIC)	NORMAL	
DIAGNOSTIC MESSAGES (ON/OFF)	ON	
DAX MESSAGES (ON/OFF)	ON	
ADVANCE PREEMPT TIMER (0 = OFF)	0	
T1: MOTION SENSING LEVEL (0 = NORMAL)	0 %	
T2: MOTION SENSING LEVEL (0 = NORMAL)	0 %	

* = IST SLOT AT LEFT END OF BAY

MODEL 3000 GCP MODULE ASSEMBLIES										
UPPER BAY										
MODULES POSITION	M1	M2	M3	M4	M5	M6	M7	M8	M9	M10
MODULE NUMBERS	80211-f(1) * ISL	80211-f(2) ISL	80012 T/R 1	80012 T/R 2	80013 RLY DRV	80214 PROCS	80255 REC-INTF	80016 (1) DAX	80016 (2) DAX	80020 +80017
MODULES USED			x	x	x	x				x

NOTES:
1 - SEE IPI INSTRUCTION AND INSTALLATION MANUAL FOR 80211 ISLAND CALIBRATION PROCEDURE.

2 - TOGGLE SWITCH ON MOTHER BOARD:
UP = DUAL FREQ.
DOWN = SINGLE FREQ.

~~00~~ = IN
~~XX~~ = OUT
CP
12-11-06

3000D2 PROGRAMMING NOTES:

1) AVAILALBE WHEN "TRANSFER DELAY MS TO GCP" AND "PRIME PREDICTION OFFSET" IS ON
2) AVAILABLE WHEN "TRANSFER DELAY MS TO GCP" AND DAX DISTANCE IS GREATER THAN ZERO
3) AVAILABLE WHEN "ENHANCED DETECTION" IS ON
4) AVAILABLE WHEN "LOW EZ DETECTION" IS ON
5) AVAILABLE WHEN "POSITIVE START" IS ON

PANEL "A5" 3000 GCP SET-UP

DESIGNED BY: DBS 12-03-06	NORFOLK SOUTHERN		
DRAWN BY: IRE 12-03-06	OFFICE OF ASS'T. VICE PRESIDENT COMM. & SIGNAL, ATLANTA, GA.	M.P.: CD-295.20	
CHECKED BY: RDO 12-05-06	TOLEDO, OH REMOTE DAX HOUSE AT HOLLAND-SYLVANIA RD.		
IN SERVICE: - -	CHICAGO LINE	FILE No. R-	
	CADD or DWG. No. 36002952.09	SHEET No. 9 of 15	

REVISION INITIALS

PROPERTY PENNSYLVANIA R.R.

LEFT TWO ROWS TERMINAL BOARD 1

"1A" "1B"

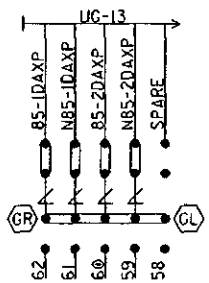

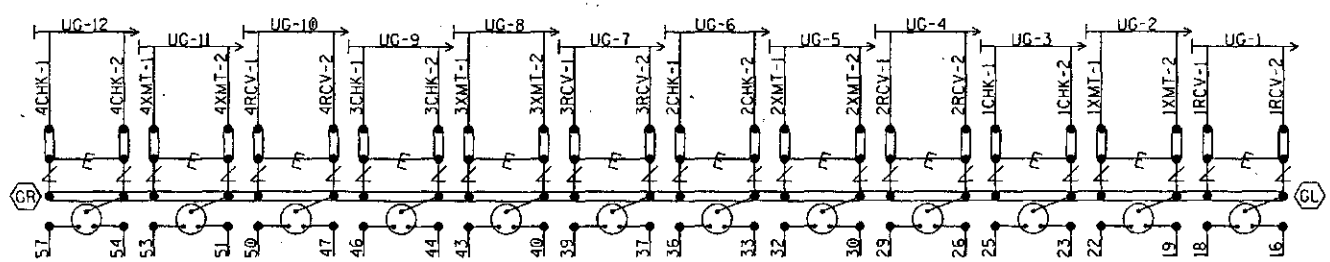

NOTE: INSTALL TEST LINKS ON ALL TRACK WIRES AND ON ALL LOW VOLTAGE UNDERGROUND CABLE TERMINATIONS.

= Heavy Duty Equalizer (022700-1X)

Clearview = Lightning Arrester (022585-1X)

= LPC-10560-51

GR / GL = TERMINALS GROUNDED TO SHIELD. 4 POST BLOCKS USE EITHER - GR - SERMMI PART NO. 61278 GL - SERMMI PART NO. 61278-1.

SEE FARADAY SHIELD DETAILS - 1A & 1B FOR HOW THIS PORTION OF THE FARADAY SHIELD IS PREDRILLED. ONLY INSTALL AND USE THE TERMINALS NEEDED.

BACKBOARD DETAIL - 1A & 1B

DESIGNED BY: DBS 12-03-06	NORFOLK SOUTHERN		
DRAWN BY: IRE 12-03-06	OFFICE OF ASS'T. VICE PRESIDENT COMM. & SIGNAL, ATLANTA, GA.	M.P.: CD-295.20	
CHECKED BY: RDO 12-05-06	TOLEDO, OH REMOTE DAX HOUSE AT HOLLAND-SYLVANIA RD.		
IN SERVICE: - -	CHICAGO LINE	FILE No. R-	
	CADD or DWG. No. 36002952.10	SHEET No. 10 of 15	

REVISION INITIALS

PROPERTY PENNSYLVANIA R.R.

NOTE: IF THE FARADAY SHIELD WOULD EVER NEED TO BE DRILLED IN THE FIELD, PROPER PRECAUTIONS MUST BE TAKEN TO INSURE METAL SHAVINGS DO NOT GET INTO EXISTING TERMINALS/WIRES.

AREA BELOW IS SCALED WITH AS=.75

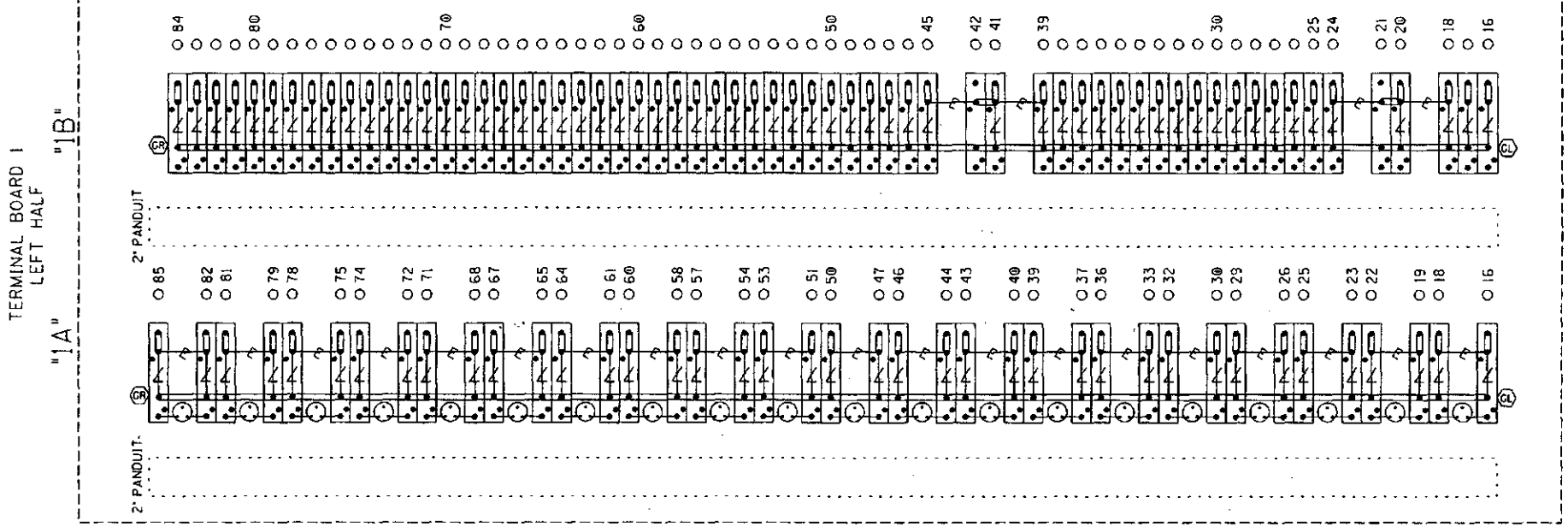

= Heavy Duty Equalizer (022700-1X)

Clearview = Lightning Arrester (022585-1X)

= LPC-10560-51

TERMINAL BOARD 1
LEFT TWO ROWS
FARADAY SHIELD DETAIL - 1A & 1B

= INDICATES PLACEMENT OF PANDUIT

THIS SHEET IS FOR REFERENCE ONLY, TO REFLECT HOW THE FARADAY SHIELD IS PREDRILLED. ONLY INSTALL AND USE THE TERMINALS NEEDED.

GR / GL = TERMINALS GROUNDED TO SHIELD. 4 POST BLOCKS USE EITHER - GR - SERMMI PART NO. 61278 GL - SERMMI PART NO. 61278-1.

DESIGNED BY: DBS	12-03-06
DRAWN BY: IRE	12-03-06
CHECKED BY: RDO	12-05-06
IN SERVICE:	- -

NORFOLK SOUTHERN

OFFICE OF ASS'T. VICE PRESIDENT COMM. & SIGNAL, ATLANTA, GA. | M.P.: CD-295.20

TOLEDO, OH
REMOTE DAX HOUSE AT HOLLAND-SYLVANIA RD.

CHICAGO LINE | FILE No. R-

CADD or DWG. No. 36002952.11 | SHEET No. 11 of 15

REVISION INITIALS

PROPERTY
PENNSYLVANIA R.R.

NOTE: IF THE FARADAY SHIELD WOULD EVER NEED TO BE DRILLED IN THE FIELD, PROPER PRECAUTIONS MUST BE TAKEN TO INSURE METAL SHAVINGS DO NOT GET INTO EXISTING TERMINALS/WIRES.

AREA BELOW IS SCALED WITH AS=.75

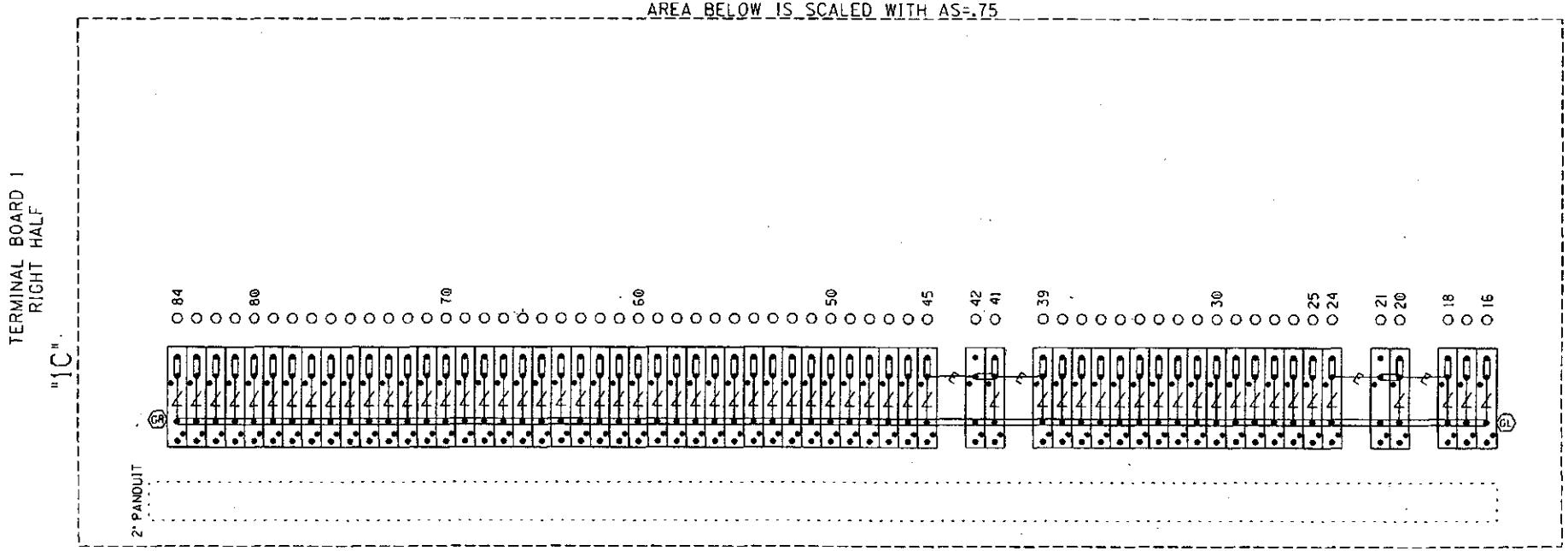

= Heavy Duty Equalizer (022700-1X)

Clearview = Lightning Arrester (022585-1X)

= LPC-10560-51

TERMINAL BOARD 1
RIGHT ROW
FARADAY SHIELD DETAIL - 1C

= INDICATES PLACEMENT OF PANDUIT

THIS SHEET IS FOR REFERENCE ONLY, TO REFLECT HOW THE FARADAY SHIELD IS PREDRILLED. ONLY INSTALL AND USE THE TERMINALS NEEDED.

GR / GL = TERMINALS GROUNDED TO SHIELD. 4 POST BLOCKS USE EITHER - GR - SERMMI PART NO. 61278 GL - SERMMI PART NO. 61278-1.

DESIGNED BY: DBS 12-03-06	NORFOLK SOUTHERN		
DRAWN BY: IRE 12-03-06	OFFICE OF ASS'T. VICE PRESIDENT COMM. & SIGNAL, ATLANTA, GA.	M.P.: CD-295.20	
CHECKED BY: RDO 12-05-06	TOLEDO, OH REMOTE DAX HOUSE AT HOLLAND-SYLVANIA RD.		
IN SERVICE: - -	CHICAGO LINE	FILE NO. R-	
	CADD or DWG. No. 36002952.12	SHEET No. 12 of 15	

REVISION INITIALS

PROPERTY PENNSYLVANIA R.R.

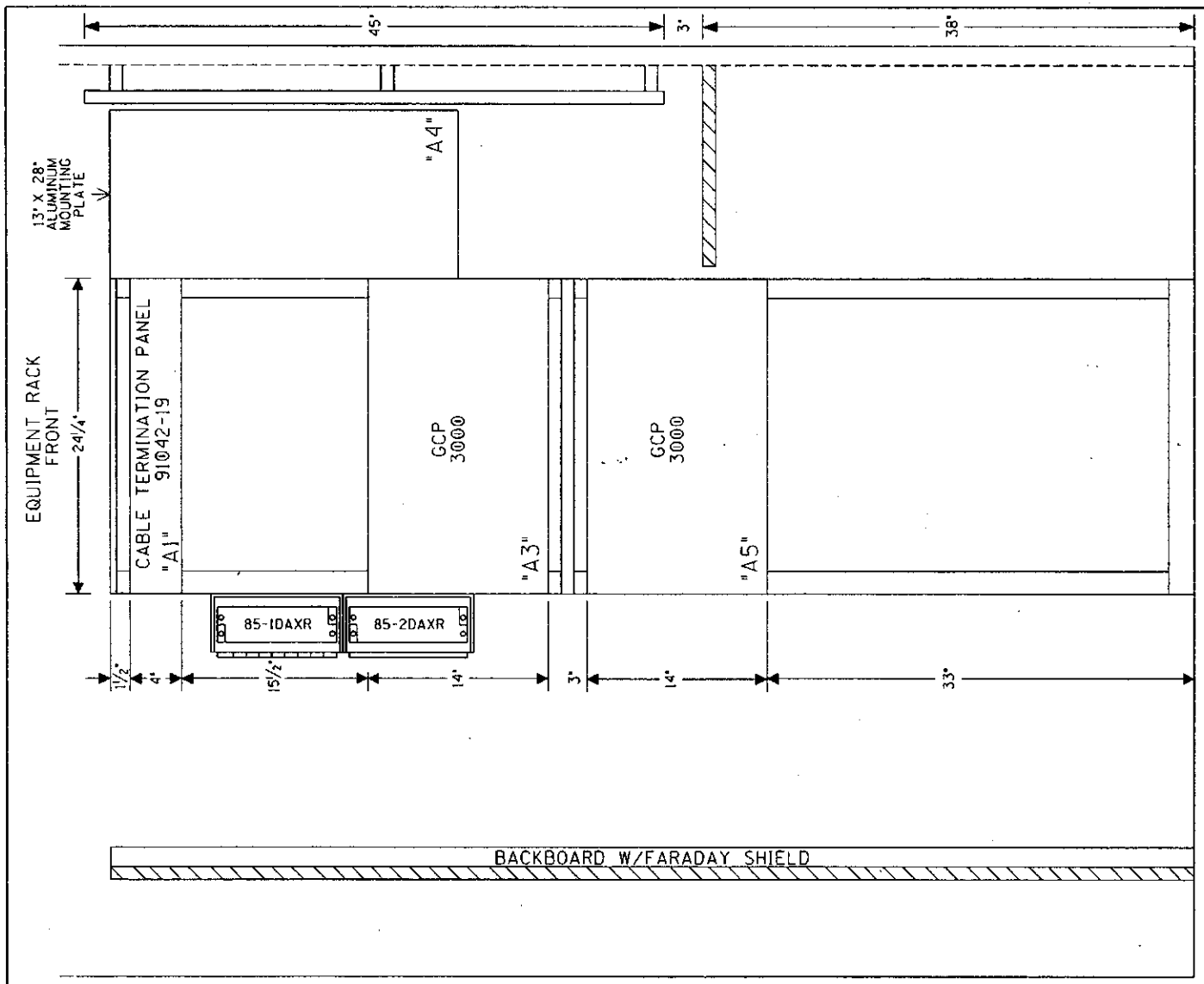

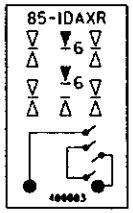

SAFETRAN, ALSTOM(GRS) RELAY CROSS REFERENCE LIST

SAFETRAN		ALSTOM(GRS)
400003	–	A62-308

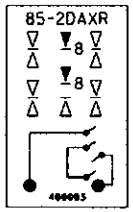

SAFETRAN, ALSTOM(GRS) RELAY CROSS REFERENCE LIST

SAFETRAN		ALSTOM(GRS)
400003	–	A62-308

SIDE "C"

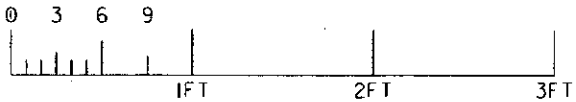

RACK PLACEMENT
6' X 6' HOUSE - SIDE "C"

DESIGNED BY: DBS 12-03-06	NORFOLK SOUTHERN		
DRAWN BY: IRE 12-03-06	OFFICE OF ASS'T. VICE PRESIDENT COMM. & SIGNAL, ATLANTA, GA.	M.P.: CD-295.20	
CHECKED BY: RDO 12-05-06	TOLEDO, OH REMOTE DAX HOUSE AT HOLLAND-SYLVANIA RD.		
IN SERVICE: - -	CHICAGO LINE	FILE No. R-	
	CADD or DWG. No. 36002952.13	SHEET No. 13 of 15	

REVISION INITIALS											PROPERTY PENNSYLVANIA R.R.

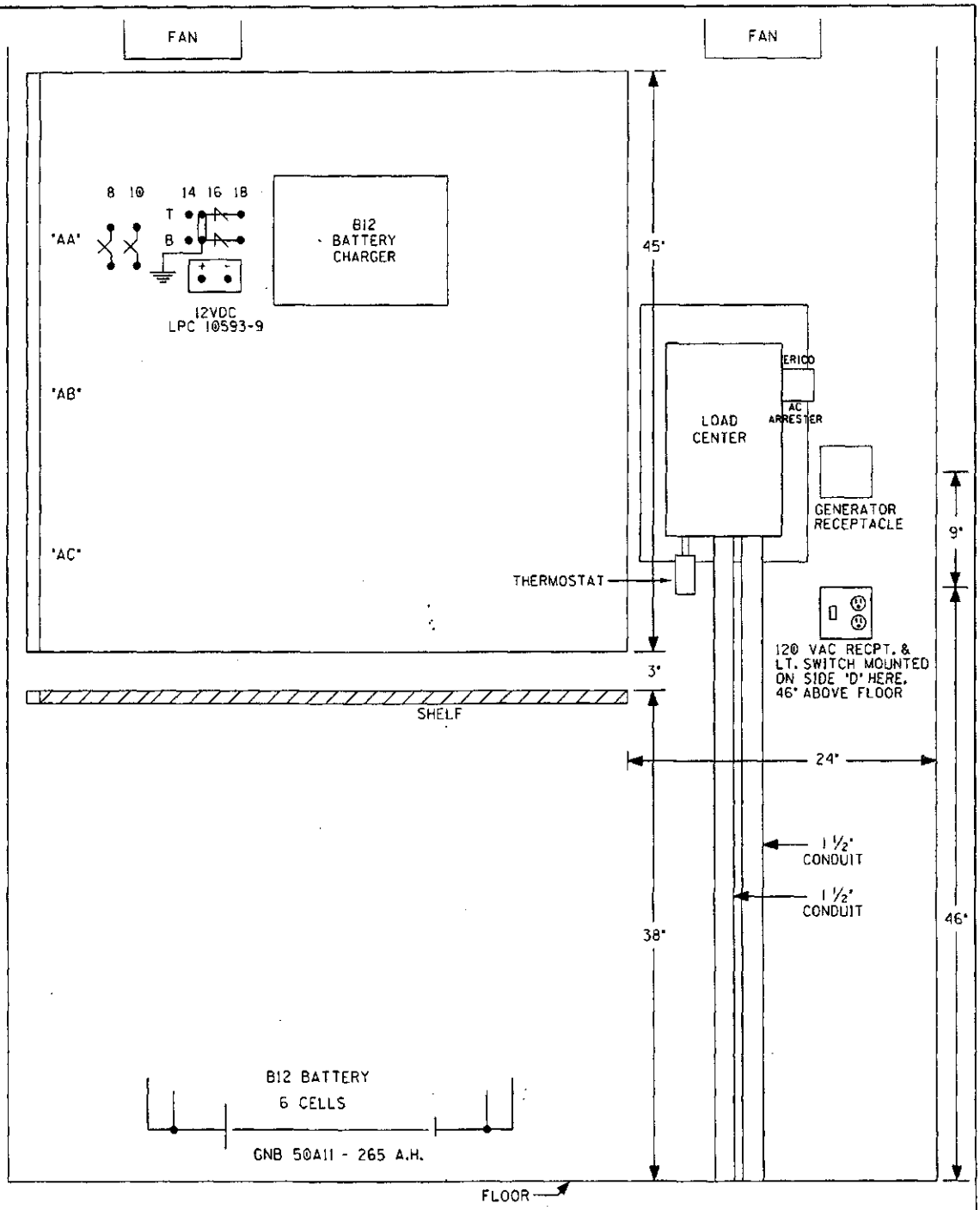

SIDE "A"

6' X 6' HOUSE - SIDE "A"

REVISION INITIALS	
PROPERTY	PENNSYLVANIA R.R.
DESIGNED BY:	DBS 12-03-06
DRAWN BY:	IRE 12-03-06
CHECKED BY:	RDO 12-05-06
IN SERVICE:	- -
NORFOLK SOUTHERN	
OFFICE OF ASS'T. VICE PRESIDENT COMM. & SIGNAL, ATLANTA, GA.	M.P.: CD-295.20
REMOTE DAX HOUSE AT TOLEDO, OH HOLLAND-SYLVANIA RD.	
CHICAGO LINE	FILE NO. R-
CADD OF DWG. NO. 36002952.14	SHEET NO. 14 of 15

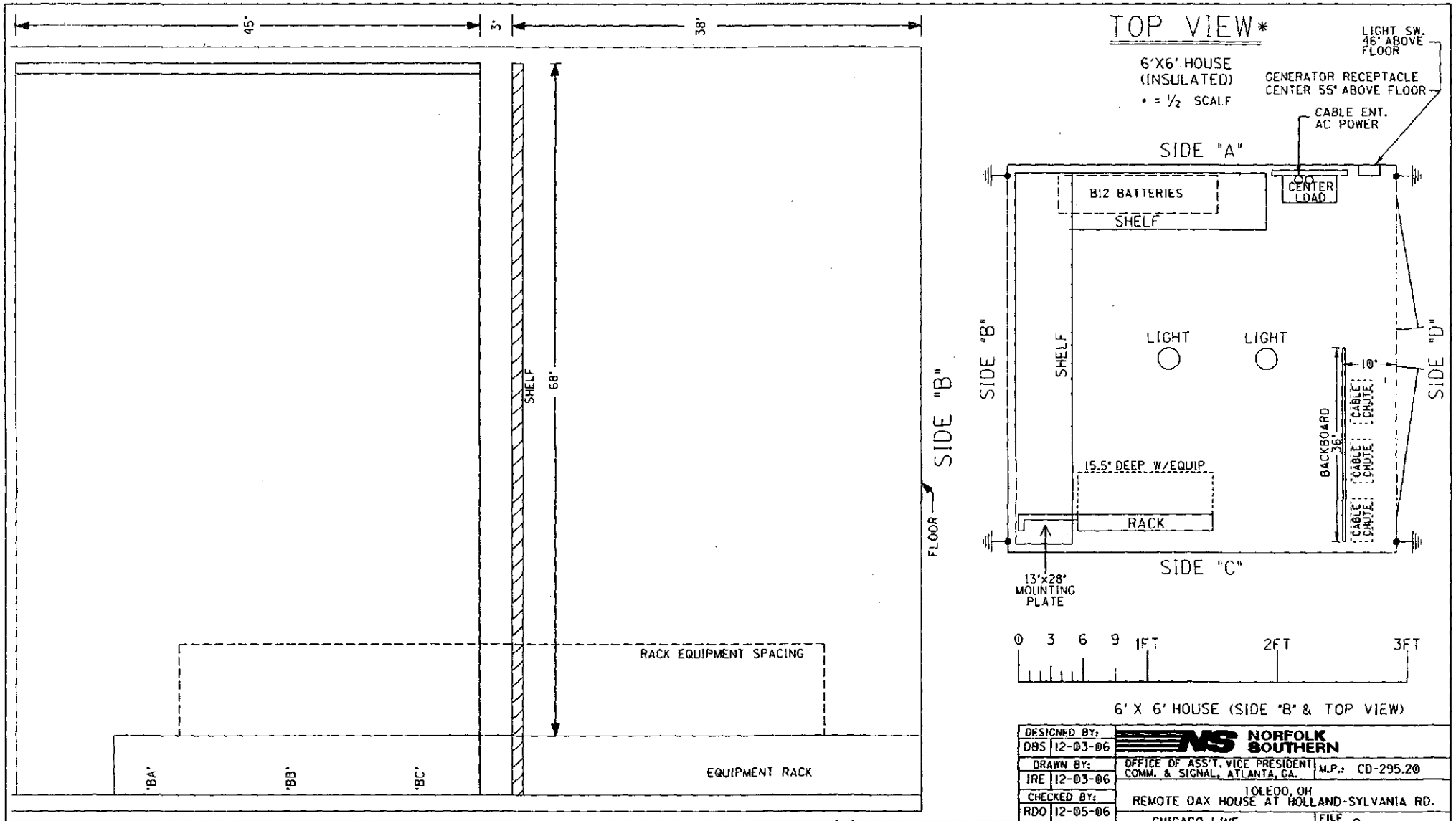

REVISION INITIALS	PROPERTY PENNSYLVANIA R.R.	DESIGNED BY: DBS 12-03-06	NORFOLK SOUTHERN
		DRAWN BY: IRE 12-03-06	OFFICE OF ASS'T. VICE PRESIDENT COMM. & SIGNAL, ATLANTA, GA. — M.P.: CD-295.20
		CHECKED BY: RDO 12-05-06	TOLEDO, OH — REMOTE DAX HOUSE AT HOLLAND-SYLVANIA RD.
		IN SERVICE: - -	CHICAGO LINE — FILE No. R-
			CADD or DWG. No. 36002952.15 — SHEET No. 15 of 15