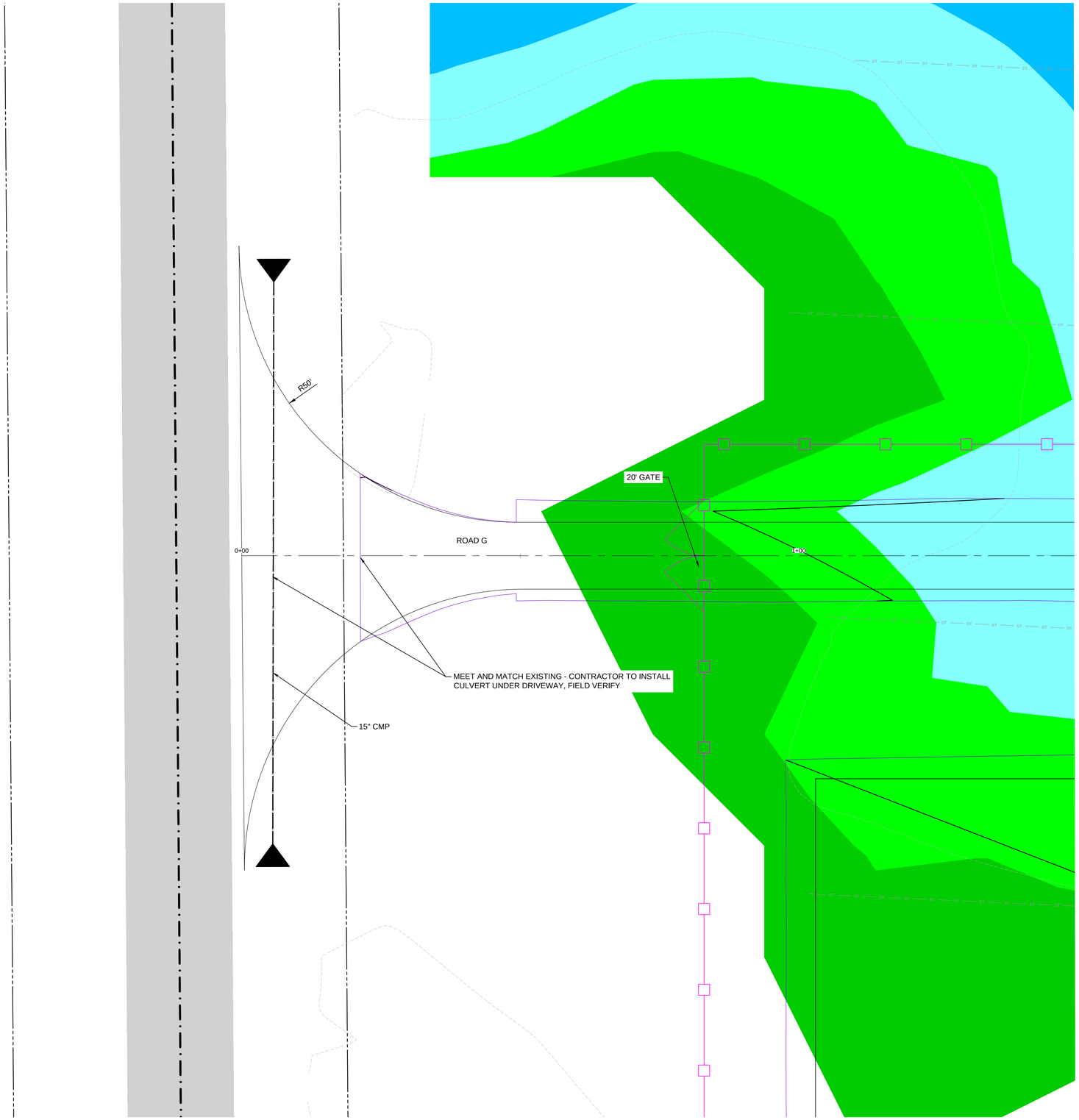

LEGEND

EXISTING FEATURES

- PROPERTY LINE
- EASEMENT LINE
- ROAD RIGHT OF WAY
- NON PARTICIPATING BOUNDARIES
- ARCHEOLOGICAL GRADING AVOIDANCE AREA
- EDGE OF AGGREGATE ROAD
- FENCE
- TREES
- WETLANDS
- WATERBODY
- FEMA FLOODPLAIN
- RAILROAD TRACKS
- UNDERGROUND FIBER OPTICS
- OVERHEAD POWER
- UNDERGROUND TELEPHONE LINE
- DRAINTILE SEE NOTE ON C-001
- MAJOR CONTOUR
- MINOR CONTOUR
- CONTROL POINT

PROPOSED FEATURES

- AGGREGATE ROAD
- TEMPORARY AGGREGATE SURFACE
- CHAIN LINK FENCE
- TEMPORARY FENCE
- PROPOSED GATES
- WETLAND BUFFER
- LEASE BOUNDARY
- CULVERT
- GRADING EDGE
- MAJOR CONTOUR
- MINOR CONTOUR
- RIPRAP
- STORMWATER BERMS
- STORMWATER BASIN OUTLINE
- SWALE / DITCH
- LAYDOWN AREA

EROSION CONTROL FEATURES

PROPOSED 100 YR HWL DEPTHS

RANGE	MIN. ELEVATION	MAX. ELEVATION	
1	0.00	0.25	
2	0.25	0.50	
3	0.50	1.00	
4	1.00	1.50	
5	1.50	2.00	
6	2.00	12.00	

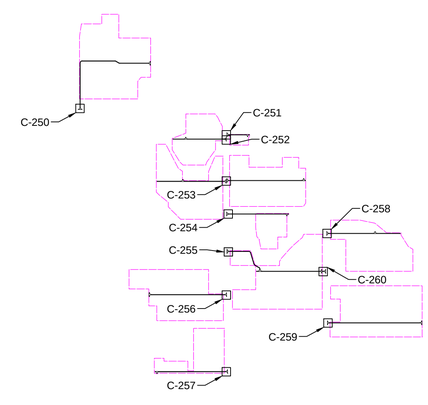

EVS, INC.
10025 Valley View Road, Suite 140
Eden Prairie, Minnesota 55344
Phone: 952-646-0236
www.evs-eng.com

CLIENT

McCARTHY

PROJECT
ARCHE SOLAR

LOCATION
22773 US HWY 20
FAYETTE, OH 43521

SUBMITTAL
90% SUBMITTAL

SCALE

NORTH

0 10 20 FT
1 2 IN

DRAWING SCALES APPLY TO 22" x 34" SHEETS

#	DATE	DESCRIPTION

PROFESSIONAL CERTIFICATION

STATE OF OHIO
NOAH SCOTT WATERHOUSE
PE.80989
REGISTERED
PROFESSIONAL ENGINEER

Noah Waterhouse, PE
DATE 08/19/2022

DRAWN BY **DG/CL/AB**
CHECKED BY **BJ/NW**
DATE **2022.08.19**
PROJECT # **2022-013**

SHEET NAME
DRIVEWAY PLANS

SHEET NUMBER
C-255

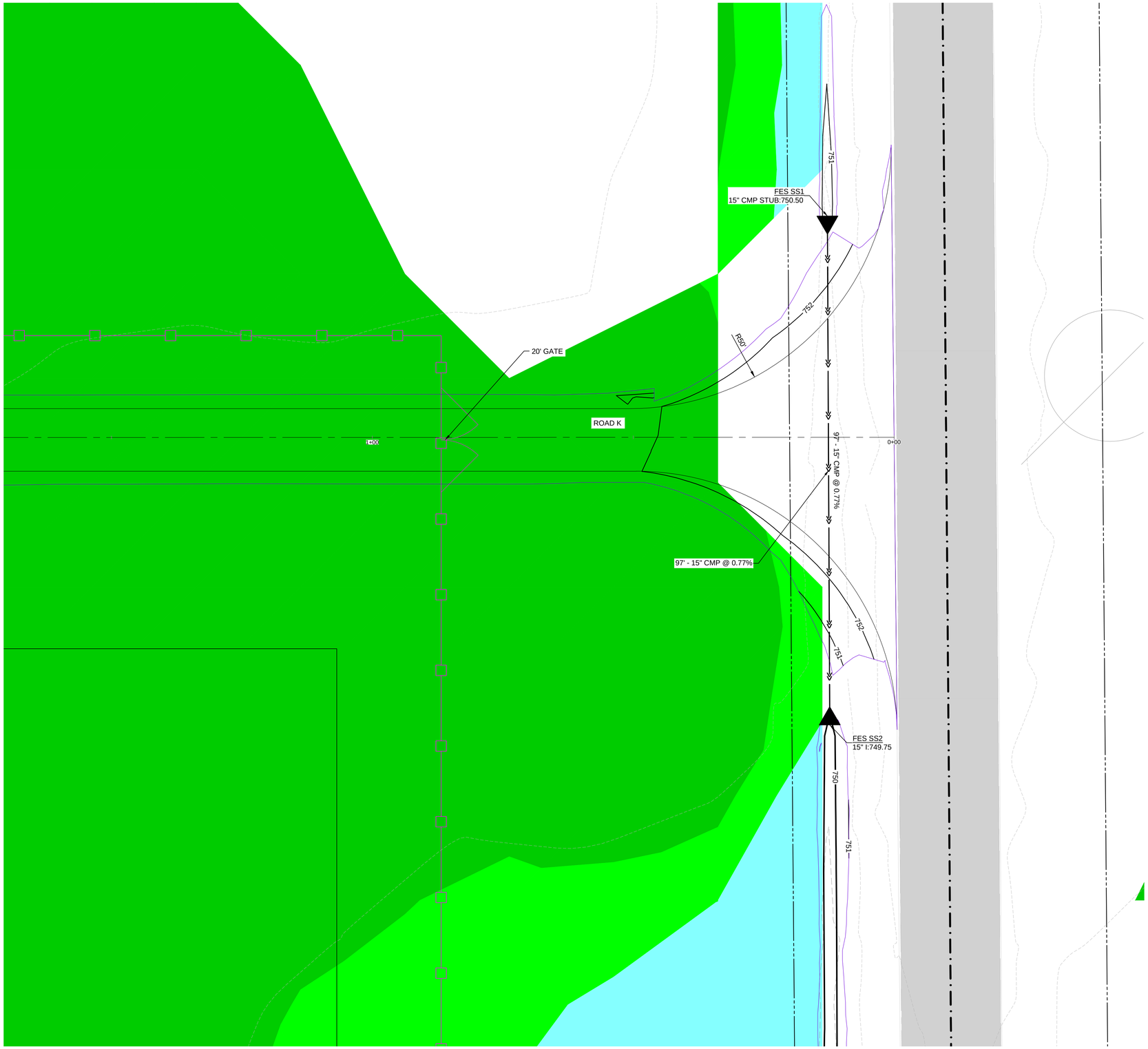

LEGEND

EXISTING FEATURES

- PROPERTY LINE
- EASEMENT LINE
- ROAD RIGHT OF WAY
- NON PARTICIPATING BOUNDARIES
- ARCHEOLOGICAL GRADING AVOIDANCE AREA
- EDGE OF AGGREGATE ROAD
- FENCE
- TREES
- WETLANDS
- WATERBODY
- FEMA FLOODPLAIN
- RAILROAD TRACKS
- UNDERGROUND FIBER OPTICS
- OVERHEAD POWER
- UNDERGROUND TELEPHONE LINE
- DRAINTILE SEE NOTE ON C-001
- MAJOR CONTOUR
- MINOR CONTOUR

PROPOSED FEATURES

- AGGREGATE ROAD
- TEMPORARY AGGREGATE SURFACE
- CHAIN LINK FENCE
- TEMPORARY FENCE
- PROPOSED GATES
- WETLAND BUFFER
- LEASE BOUNDARY
- CULVERT
- GRADING EDGE
- MAJOR CONTOUR
- MINOR CONTOUR
- RIPRAP
- STORMWATER BERMS
- STORMWATER BASIN OUTLINE
- SWALE / DITCH
- LAYDOWN AREA

PROPOSED 100 YR HWL DEPTHS

RANGE	MIN. ELEVATION	MAX. ELEVATION	
1	0.00	0.25	
2	0.25	0.50	
3	0.50	1.00	
4	1.00	1.50	
5	1.50	2.00	
6	2.00	12.00	

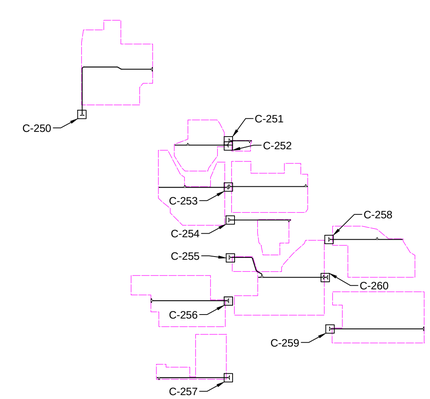

EVS, INC.
10025 Valley View Road, Suite 140
Eden Prairie, Minnesota 55344
Phone: 952-646-0236
www.evs-eng.com

CLIENT

McCARTHY

PROJECT
ARCHE SOLAR

LOCATION
22773 US HWY 20
FAYETTE, OH 43521

SUBMITTAL
90% SUBMITTAL

SCALE

NORTH

0 10 20 FT
1 2 IN

DRAWING SCALES APPLY TO 22" x 34" SHEETS

#	DATE	DESCRIPTION

PROFESSIONAL CERTIFICATION

STATE OF OHIO
NOAH SCOTT WATERHOUSE
PE.80989
REGISTERED PROFESSIONAL ENGINEER

Noah Waterhouse, PE
DATE 08/19/2022

DRAWN BY **DG/CL/AB**
CHECKED BY **BJ/NW**
DATE **2022.08.19**
PROJECT # **2022-013**

SHEET NAME
DRIVEWAY PLANS

SHEET NUMBER
C-256

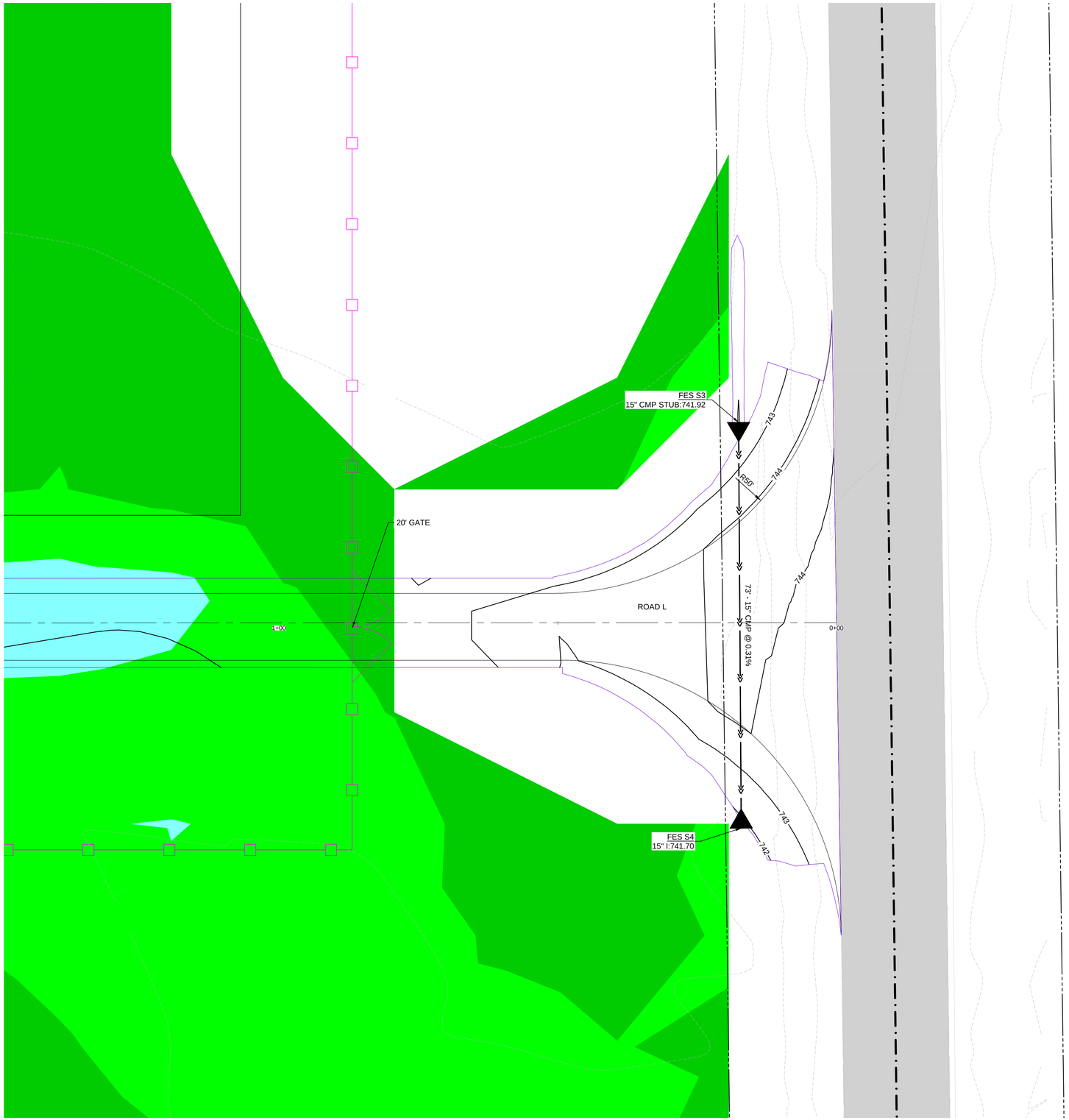

LEGEND

EXISTING FEATURES

- PROPERTY LINE
- EASEMENT LINE
- ROAD RIGHT OF WAY
- NON PARTICIPATING BOUNDARIES
- ARCHEOLOGICAL GRADING AVOIDANCE AREA
- EDGE OF AGGREGATE ROAD
- FENCE
- TREES
- WETLANDS
- WATERBODY
- FEMA FLOODPLAIN
- RAILROAD TRACKS
- UNDERGROUND FIBER OPTICS
- OVERHEAD POWER
- UNDERGROUND TELEPHONE LINE
- DRAINTILE SEE NOTE ON C-001
- MAJOR CONTOUR
- MINOR CONTOUR
- CONTROL POINT

PROPOSED FEATURES

- AGGREGATE ROAD
- TEMPORARY AGGREGATE SURFACE
- CHAIN LINK FENCE
- TEMPORARY FENCE
- PROPOSED GATES
- WETLAND BUFFER
- LEASE BOUNDARY
- CULVERT
- GRADING EDGE
- MAJOR CONTOUR
- MINOR CONTOUR
- RIPRAP
- STORMWATER BERMS
- STORMWATER BASIN OUTLINE
- SWALE / DITCH
- LAYDOWN AREA

EROSION CONTROL FEATURES

PROPOSED 100 YR HWL DEPTHS

RANGE	MIN. ELEVATION	MAX. ELEVATION	
1	0.00	0.25	
2	0.25	0.50	
3	0.50	1.00	
4	1.00	1.50	
5	1.50	2.00	
6	2.00	12.00	

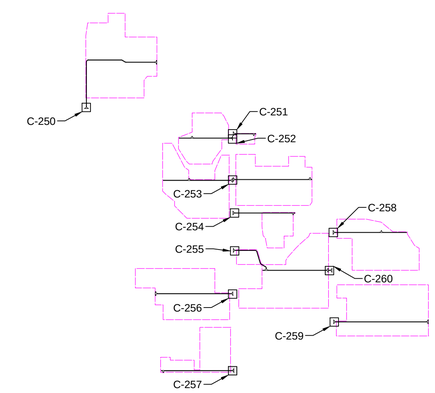

EVS, INC.
10025 Valley View Road, Suite 140
Eden Prairie, Minnesota 55344
Phone: 952-646-0236
www.evs-eng.com

CLIENT

McCARTHY

PROJECT
ARCHE SOLAR

LOCATION
22773 US HWY 20
FAYETTE, OH 43521

SUBMITTAL
90% SUBMITTAL

SCALE

NORTH

0 10 20 FT
1 2 IN

DRAWING SCALES APPLY TO 22" x 34" SHEETS

#	DATE	DESCRIPTION

PROFESSIONAL CERTIFICATION

STATE OF OHIO
NOAH SCOTT WATERHOUSE
PE.80989
REGISTERED PROFESSIONAL ENGINEER

Noah Waterhouse, PE
DATE 08/19/2022

DRAWN BY **DG/CL/AB**
CHECKED BY **BJ/NW**
DATE **2022.08.19**
PROJECT # **2022-013**

SHEET NAME
DRIVEWAY PLANS

SHEET NUMBER
C-257

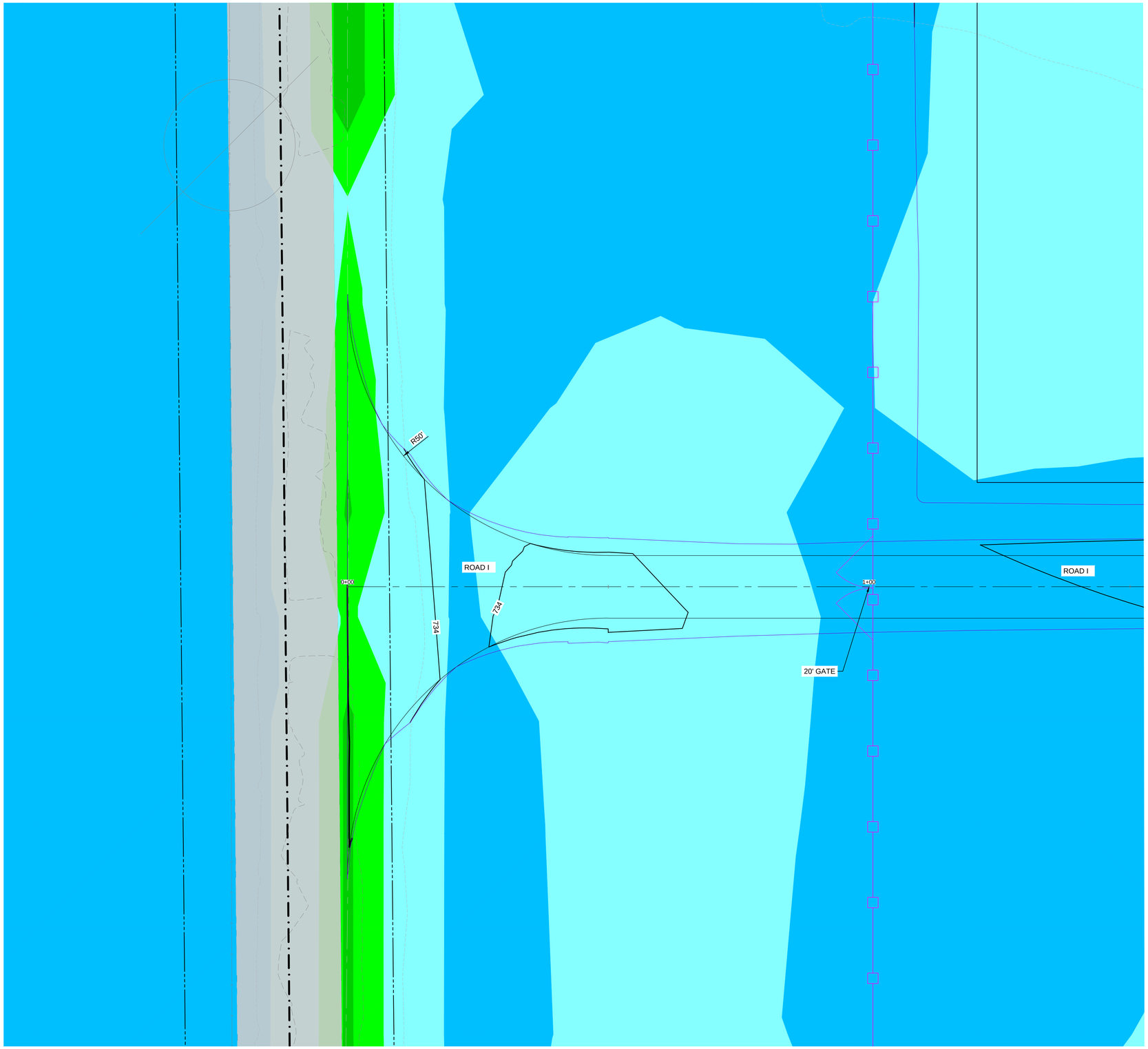

LEGEND

EXISTING FEATURES

- PROPERTY LINE
- EASEMENT LINE
- ROAD RIGHT OF WAY
- NON PARTICIPATING BOUNDARIES
- ARCHEOLOGICAL GRADING AVOIDANCE AREA
- EDGE OF AGGREGATE ROAD
- FENCE
- TREES
- WETLANDS
- WATERBODY
- FEMA FLOODPLAIN
- RAILROAD TRACKS
- UNDERGROUND FIBER OPTICS
- OVERHEAD POWER
- UNDERGROUND TELEPHONE LINE
- DRAINTILE SEE NOTE ON C-001
- MAJOR CONTOUR
- MINOR CONTOUR
- CONTROL POINT

PROPOSED FEATURES

- AGGREGATE ROAD
- TEMPORARY AGGREGATE SURFACE
- CHAIN LINK FENCE
- TEMPORARY FENCE
- PROPOSED GATES
- WETLAND BUFFER
- LEASE BOUNDARY
- CULVERT
- GRADING EDGE
- MAJOR CONTOUR
- MINOR CONTOUR
- RIPRAP
- STORMWATER BERMS
- STORMWATER BASIN OUTLINE
- SWALE / DITCH
- LAYDOWN AREA

EROSION CONTROL FEATURES

PROPOSED 100 YR HWL DEPTHS

RANGE	MIN. ELEVATION	MAX. ELEVATION	
1	0.00	0.25	
2	0.25	0.50	
3	0.50	1.00	
4	1.00	1.50	
5	1.50	2.00	
6	2.00	12.00	

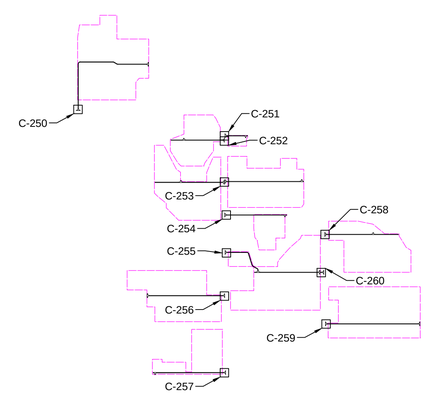

EVS, INC.
10025 Valley View Road, Suite 140
Eden Prairie, Minnesota 55344
Phone: 952-646-0236
www.evs-eng.com

CLIENT

McCARTHY

PROJECT
ARCHE SOLAR

LOCATION
22773 US HWY 20
FAYETTE, OH 43521

SUBMITTAL
90% SUBMITTAL

SCALE

NORTH

0 10 20 FT
1 2 IN

DRAWING SCALES APPLY TO 22" x 34" SHEETS

#	DATE	DESCRIPTION

PROFESSIONAL CERTIFICATION

STATE OF OHIO
NOAH SCOTT WATERHOUSE
PE.80989
REGISTERED
PROFESSIONAL ENGINEER

Noah Waterhouse, PE
DATE 08/19/2022

DRAWN BY **DG/CL/AB**
CHECKED BY **BJ/NW**
DATE **2022.08.19**
PROJECT # **2022-013**

SHEET NAME
DRIVEWAY PLANS

SHEET NUMBER
C-258

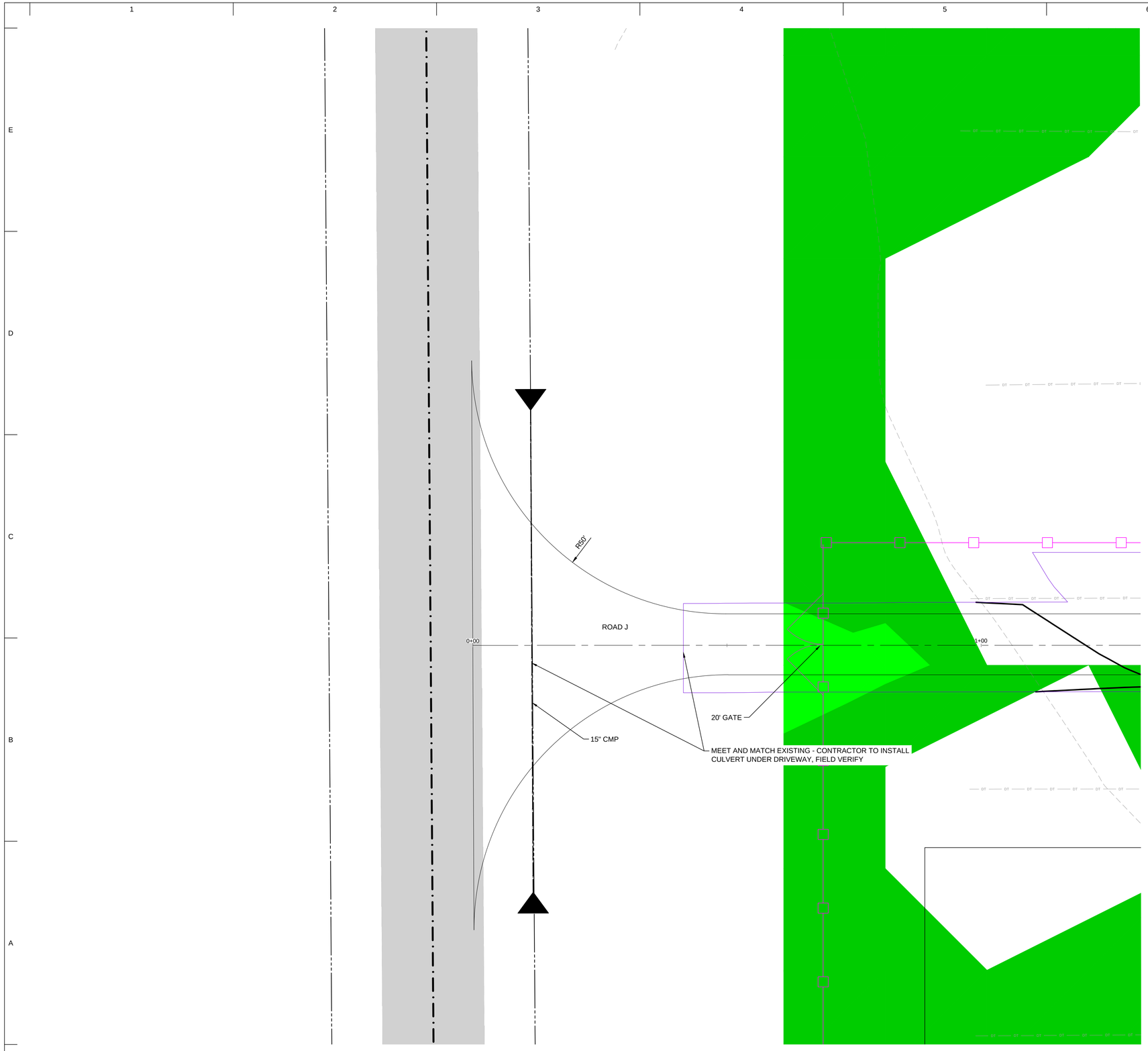

LEGEND

EXISTING FEATURES

- PROPERTY LINE
- EASEMENT LINE
- ROAD RIGHT OF WAY
- NON PARTICIPATING BOUNDARIES
- ARCHEOLOGICAL GRADING AVOIDANCE AREA
- EDGE OF AGGREGATE ROAD
- FENCE
- TREES
- WETLANDS
- WATERBODY
- FEMA FLOODPLAIN
- RAILROAD TRACKS
- UNDERGROUND FIBER OPTICS
- OVERHEAD POWER
- UNDERGROUND TELEPHONE LINE
- DRAINTILE SEE NOTE ON C-001
- MAJOR CONTOUR
- MINOR CONTOUR
- CONTROL POINT

PROPOSED FEATURES

- AGGREGATE ROAD
- TEMPORARY AGGREGATE SURFACE
- CHAIN LINK FENCE
- TEMPORARY FENCE
- PROPOSED GATES
- WETLAND BUFFER
- LEASE BOUNDARY
- CULVERT
- GRADING EDGE
- MAJOR CONTOUR
- MINOR CONTOUR
- RIPRAP
- STORMWATER BERMS
- STORMWATER BASIN OUTLINE
- SWALE / DITCH
- LAYDOWN AREA

EROSION CONTROL FEATURES

PROPOSED 100 YR HWL DEPTHS

RANGE	MIN. ELEVATION	MAX. ELEVATION	
1	0.00	0.25	
2	0.25	0.50	
3	0.50	1.00	
4	1.00	1.50	
5	1.50	2.00	
6	2.00	12.00	

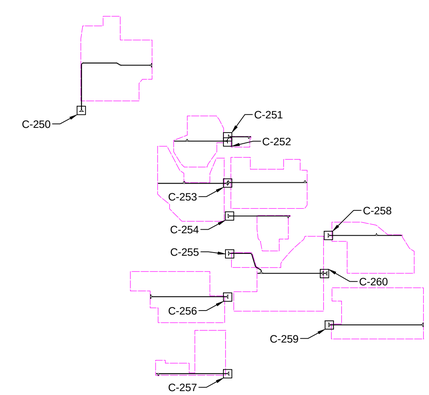

EVS, INC.
10025 Valley View Road, Suite 140
Eden Prairie, Minnesota 55344
Phone: 952-646-0236
www.evs-eng.com

CLIENT

McCARTHY

PROJECT
ARCHE SOLAR

LOCATION
22773 US HWY 20
FAYETTE, OH 43521

SUBMITTAL
90% SUBMITTAL

SCALE

NORTH

0 10 20 FT
1 2 IN

DRAWING SCALES APPLY TO 22" x 34" SHEETS

#	DATE	DESCRIPTION

PROFESSIONAL CERTIFICATION

STATE OF OHIO
NOAH SCOTT WATERHOUSE
PE.80989
REGISTERED PROFESSIONAL ENGINEER

Noah Waterhouse, PE
DATE 08/19/2022

DRAWN BY **DG/CL/AB**
CHECKED BY **BJ/NW**
DATE **2022.08.19**
PROJECT # **2022-013**

SHEET NAME
DRIVEWAY PLANS

SHEET NUMBER
C-259

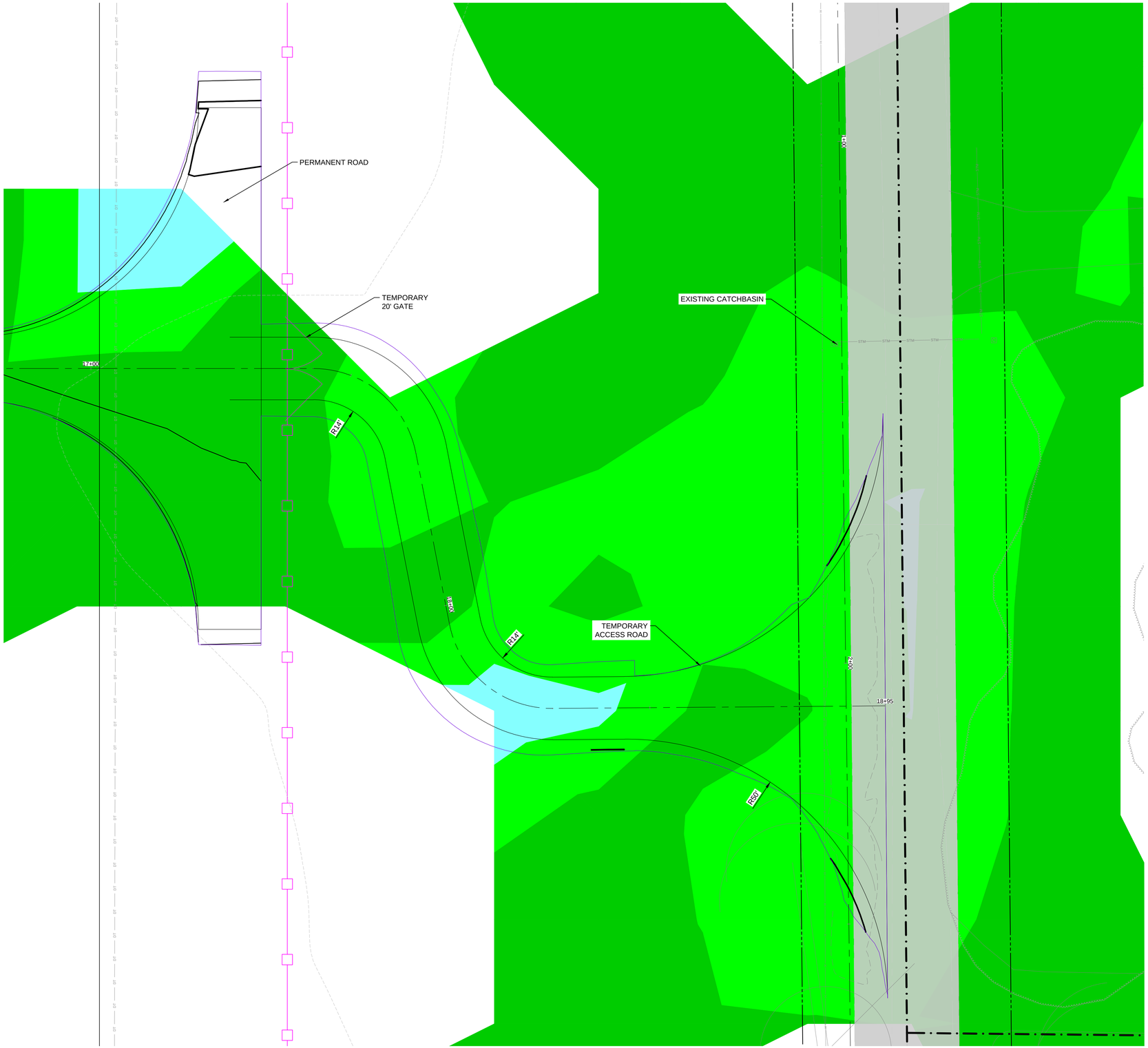

LEGEND

EXISTING FEATURES

- PROPERTY LINE
- EASEMENT LINE
- ROAD RIGHT OF WAY
- NON PARTICIPATING BOUNDARIES
- ARCHEOLOGICAL GRADING AVOIDANCE AREA
- EDGE OF AGGREGATE ROAD
- FENCE
- TREES
- WETLANDS
- WATERBODY
- FEMA FLOODPLAIN
- RAILROAD TRACKS
- UNDERGROUND FIBER OPTICS
- OVERHEAD POWER
- UNDERGROUND TELEPHONE LINE
- DRAINTILE SEE NOTE ON C-001
- MAJOR CONTOUR
- MINOR CONTOUR

PROPOSED FEATURES

- AGGREGATE ROAD
- TEMPORARY AGGREGATE SURFACE
- CHAIN LINK FENCE
- TEMPORARY FENCE
- PROPOSED GATES
- WETLAND BUFFER
- LEASE BOUNDARY
- CULVERT
- GRADING EDGE
- MAJOR CONTOUR
- MINOR CONTOUR
- RIPRAP
- STORMWATER BERMS
- STORMWATER BASIN OUTLINE
- SWALE / DITCH
- LAYDOWN AREA

PROPOSED 100 YR HWL DEPTHS

RANGE	MIN. ELEVATION	MAX. ELEVATION	
1	0.00	0.25	
2	0.25	0.50	
3	0.50	1.00	
4	1.00	1.50	
5	1.50	2.00	
6	2.00	12.00	

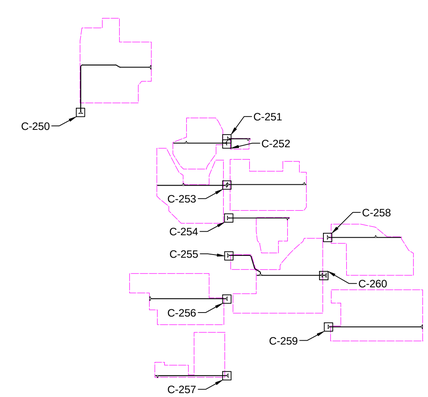

EVS, INC.
10025 Valley View Road, Suite 140
Eden Prairie, Minnesota 55344
Phone: 952-646-0236
www.evs-eng.com

CLIENT

McCARTHY

PROJECT
ARCHE SOLAR

LOCATION
22773 US HWY 20
FAYETTE, OH 43521

SUBMITTAL
90% SUBMITTAL

SCALE

NORTH

0 10 20 FT
1 2 IN

DRAWING SCALES APPLY TO 22" x 34" SHEETS

#	DATE	DESCRIPTION

PROFESSIONAL CERTIFICATION

STATE OF OHIO
NOAH SCOTT WATERHOUSE
PE.80989
REGISTERED
PROFESSIONAL ENGINEER

Noah Waterhouse, PE
DATE 08/19/2022

DRAWN BY **DG/CL/AB**
CHECKED BY **BJ/NW**
DATE **2022.08.19**
PROJECT # **2022-013**

SHEET NAME
DRIVEWAY PLANS

SHEET NUMBER
C-260

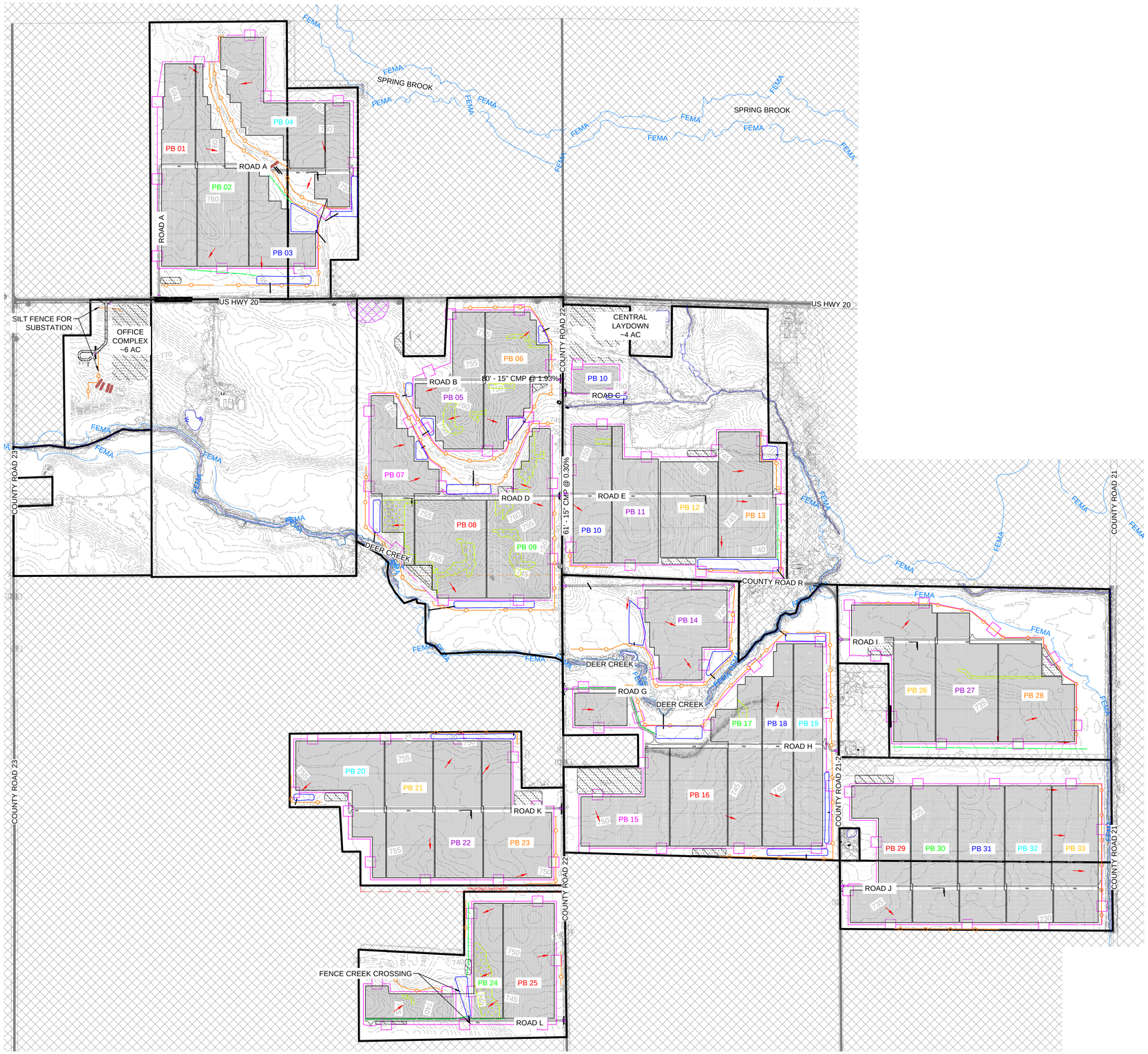

LEGEND

EXISTING FEATURES

- PROPERTY LINE
- EASEMENT LINE
- ROAD RIGHT OF WAY
- NON PARTICIPATING BOUNDARIES
- ARCHEOLOGICAL GRADING AVOIDANCE AREA
- EDGE OF AGGREGATE ROAD
- FENCE
- TREES
- WETLANDS
- WATERBODY
- FEMA FLOODPLAIN
- RAILROAD TRACKS
- UNDERGROUND FIBER OPTICS
- OVERHEAD POWER
- UNDERGROUND TELEPHONE LINE
- DRAINTILE SEE NOTE ON C-001
- MAJOR CONTOUR
- MINOR CONTOUR
- CONTROL POINT

PROPOSED FEATURES

- AGGREGATE ROAD
- TEMPORARY AGGREGATE SURFACE
- CHAIN LINK FENCE
- TEMPORARY FENCE
- PROPOSED GATES
- WETLAND BUFFER
- LEASE BOUNDARY
- CULVERT
- GRADING EDGE
- MAJOR CONTOUR
- MINOR CONTOUR
- RIPRAP
- STORMWATER BERMS
- STORMWATER BASIN OUTLINE
- SWALE / DITCH
- LAYDOWN AREA

EROSION CONTROL FEATURES

- SILT FENCE 5/C-600
- EROSION CONTROL BLANKET 3/C-600
- ROCK CONSTRUCTION ENTRANCE 4/C-600
- FIBER LOG / STRAW WATTLE 1/C-600
- FILTER BERM 2/C-600
- FLOW DIRECTION
- STRAW MULCH

NOTES

1. EROSION CONTROL BLANKET TO BE PLACED ON SLOPES GREATER THAN 5%.
2. SEE SHEET C-001 FOR EROSION CONTROL NOTES AND SITE PREPARATION NOTES.
3. FOR TYPICAL SEDIMENT BASIN DETAIL SEE DETAIL 1/C602
4. INSTALL BASIN PRIOR TO UPSTREAM GRADING OPERATIONS.
5. IF PROPOSED EROSION CONTROL MEASURES AER FOUND TO BE INADEQUATE, INSTALL ADDITIONAL BMPS AS NECESSARY AND BRING TO THE ENGINEER'S ATTENTION IMMEDIATELY.
6. CONTRACTOR TO SEED AND MULCH WITHIN 7 DAYS AFTER MASS GRADING.

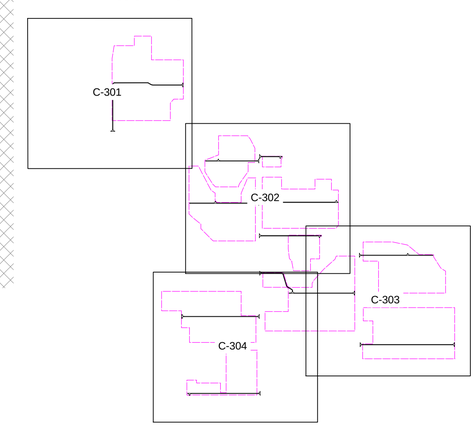

EVS, INC.
10025 Valley View Road, Suite 140
Eden Prairie, Minnesota 55344
Phone: 952-646-0236
www.evs-eng.com

CLIENT

McCARTHY

PROJECT
ARCHE SOLAR

LOCATION
22773 US HWY 20
FAYETTE, OH 43521

SUBMITTAL
90% SUBMITTAL

SCALE

NORTH

0 500 1000 FT
1 2 IN

DRAWING SCALES APPLY TO 22" x 34" SHEETS

#	DATE	DESCRIPTION

PROFESSIONAL CERTIFICATION

STATE OF OHIO
NOAH SCOTT WATERHOUSE
PE.80989
REGISTERED PROFESSIONAL ENGINEER

Noah Waterhouse, PE
DATE 08/19/2022

DRAWN BY	CHECKED BY
DG/CL/AB	BJ/NW
DATE	PROJECT #
2022.08.19	2022-013

SHEET NAME
EROSION CONTROL PLAN

SHEET NUMBER
C-300

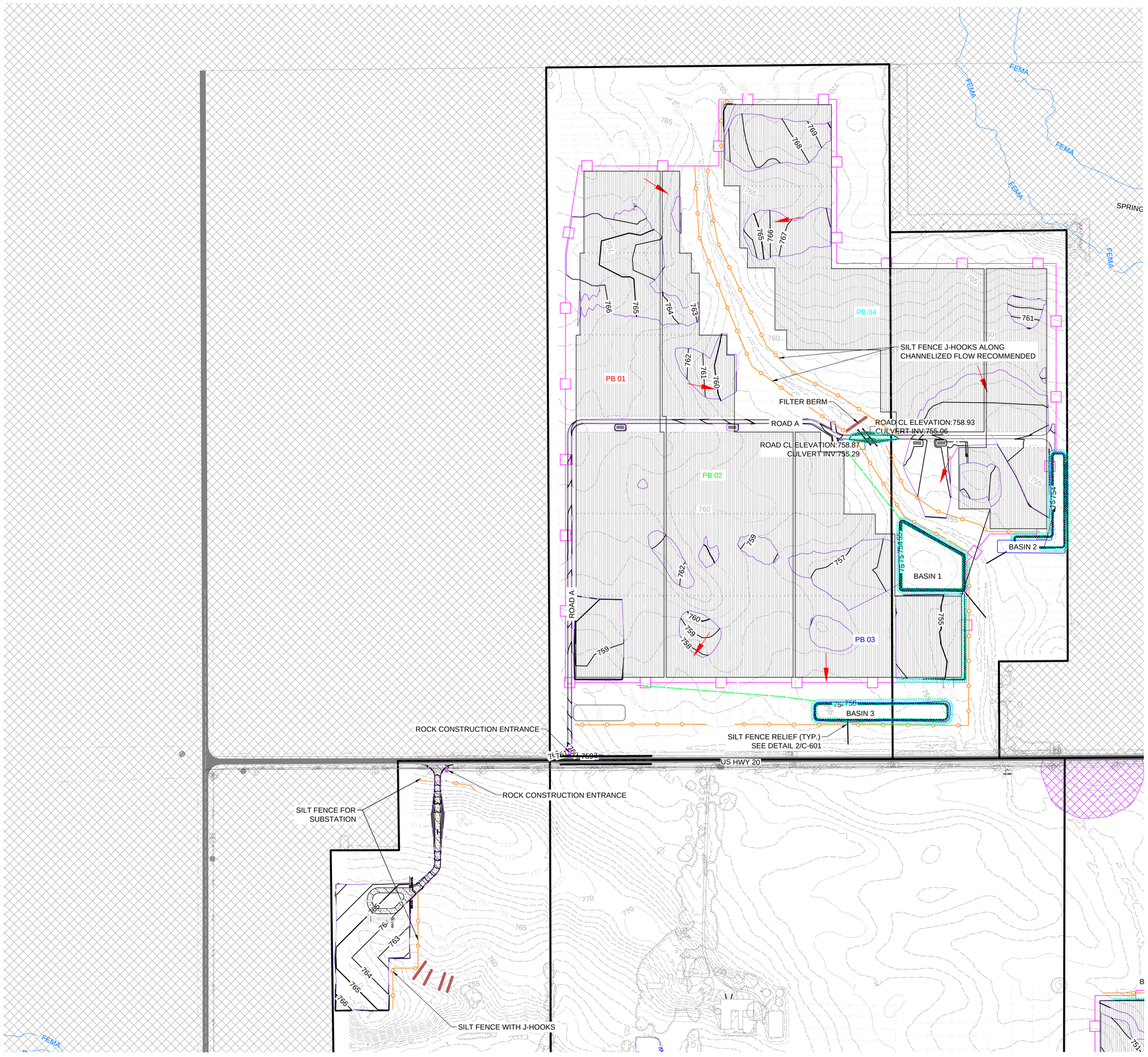

LEGEND

EXISTING FEATURES

- PROPERTY LINE
- EASEMENT LINE
- ROAD RIGHT OF WAY
- NON PARTICIPATING BOUNDARIES
- ARCHEOLOGICAL GRADING AVOIDANCE AREA
- EDGE OF AGGREGATE ROAD
- FENCE
- TREES
- WETLANDS
- WATERBODY
- FEMA FLOODPLAIN
- RAILROAD TRACKS
- UNDERGROUND FIBER OPTICS
- OVERHEAD POWER
- UNDERGROUND TELEPHONE LINE
- DRAINTILE SEE NOTE ON C-001
- MAJOR CONTOUR
- MINOR CONTOUR
- CONTROL POINT

PROPOSED FEATURES

- AGGREGATE ROAD
- TEMPORARY AGGREGATE SURFACE
- CHAIN LINK FENCE
- TEMPORARY FENCE
- PROPOSED GATES
- WETLAND BUFFER
- LEASE BOUNDARY
- CULVERT
- GRADING EDGE
- MAJOR CONTOUR
- MINOR CONTOUR
- RIPRAP
- STORMWATER BERMS
- STORMWATER BASIN OUTLINE
- SWALE / DITCH
- LAYDOWN AREA

EROSION CONTROL FEATURES

- SILT FENCE 5/C-600
- EROSION CONTROL BLANKET 3/C-600
- ROCK CONSTRUCTION ENTRANCE 4/C-600
- FIBER LOG / STRAW WATTLE 1/C-600
- FILTER BERM 2/C-600
- FLOW DIRECTION
- STRAW MULCH

NOTES

1. EROSION CONTROL BLANKET TO BE PLACED ON SLOPES GREATER THAN 5%.
2. SEE SHEET C-001 FOR EROSION CONTROL NOTES AND SITE PREPARATION NOTES.
3. FOR TYPICAL SEDIMENT BASIN DETAIL SEE DETAIL 1/C602
4. INSTALL BASIN PRIOR TO UPSTREAM GRADING OPERATIONS.
5. IF PROPOSED EROSION CONTROL MEASURES AER FOUND TO BE INADEQUATE, INSTALL ADDITIONAL BMPS AS NECESSARY AND BRING TO THE ENGINEER'S ATTENTION IMMEDIATELY.
6. CONTRACTOR TO SEED AND MULCH WITHIN 7 DAYS AFTER MASS GRADING.

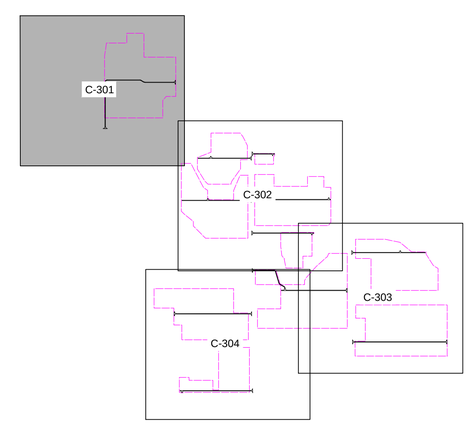

EVS, INC.
10025 Valley View Road, Suite 140
Eden Prairie, Minnesota 55344
Phone: 952-646-0236
www.evs-eng.com

CLIENT

McCARTHY

PROJECT
ARCHE SOLAR

LOCATION
22773 US HWY 20
FAYETTE, OH 43521

SUBMITTAL
90% SUBMITTAL

SCALE

NORTH

0 200 400 FT
1 2 IN

DRAWING SCALES APPLY TO 22" x 34" SHEETS

#	DATE	DESCRIPTION

PROFESSIONAL CERTIFICATION

STATE OF OHIO
NOAH SCOTT WATERHOUSE
PE.80989
REGISTERED
PROFESSIONAL ENGINEER

Noah Waterhouse, PE
DATE 08/19/2022

DRAWN BY	CHECKED BY
DG/CL/AB	BJ/NW
DATE	PROJECT #
2022.08.19	2022-013

SHEET NAME
EROSION CONTROL PLAN

SHEET NUMBER
C-301

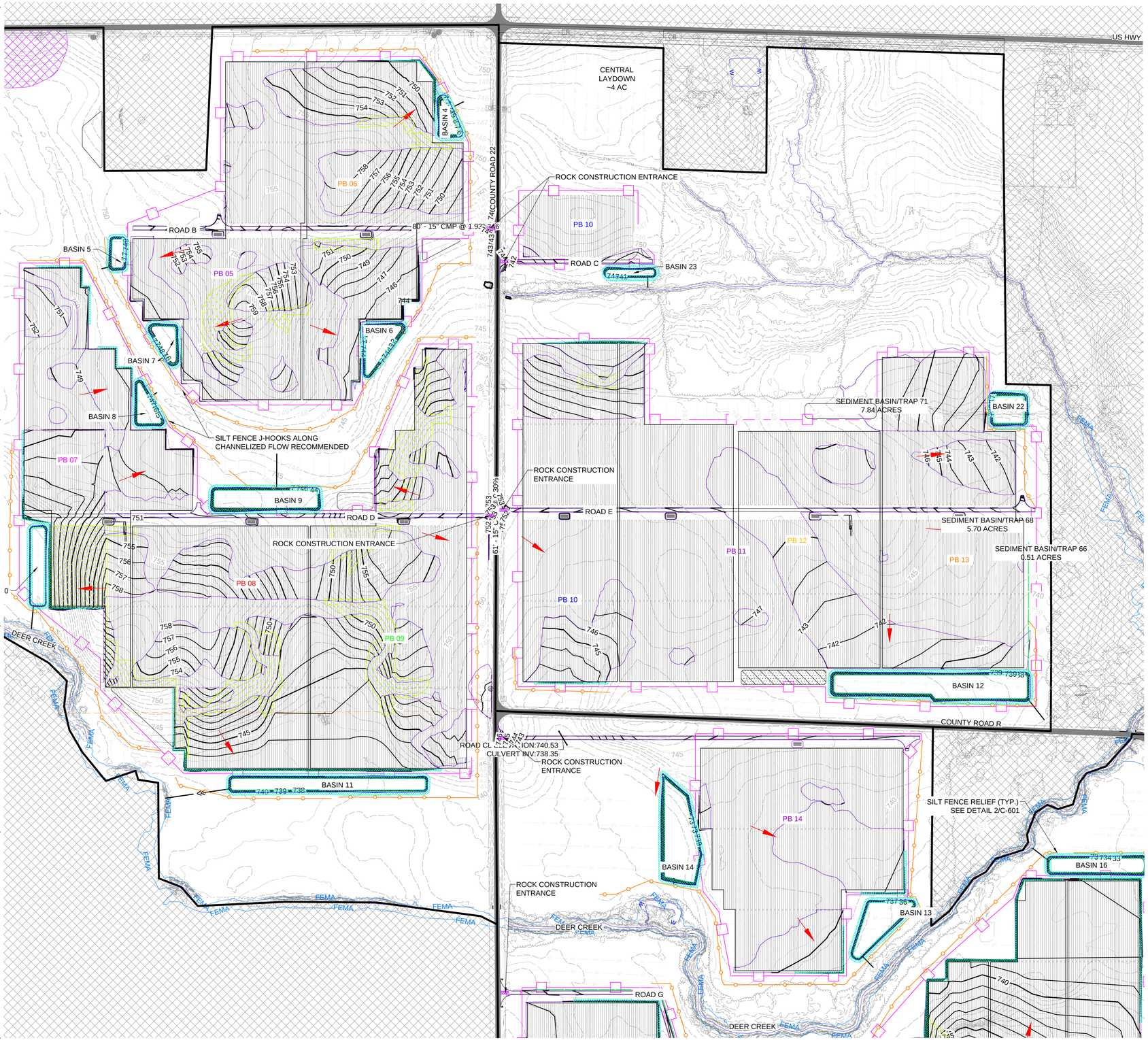

LEGEND

EXISTING FEATURES

- PROPERTY LINE
- EASEMENT LINE
- ROAD RIGHT OF WAY
- NON PARTICIPATING BOUNDARIES
- ARCHEOLOGICAL GRADING AVOIDANCE AREA
- EDGE OF AGGREGATE ROAD
- FENCE
- TREES
- WETLANDS
- WATERBODY
- FEMA FLOODPLAIN
- RAILROAD TRACKS
- UNDERGROUND FIBER OPTICS
- OVERHEAD POWER
- UNDERGROUND TELEPHONE LINE
- DRAINTILE SEE NOTE ON C-001
- MAJOR CONTOUR
- MINOR CONTOUR
- CONTROL POINT

PROPOSED FEATURES

- AGGREGATE ROAD
- TEMPORARY AGGREGATE SURFACE
- CHAIN LINK FENCE
- TEMPORARY FENCE
- PROPOSED GATES
- WETLAND BUFFER
- LEASE BOUNDARY
- CULVERT
- GRADING EDGE
- MAJOR CONTOUR
- MINOR CONTOUR
- RIPRAP
- STORMWATER BERMS
- STORMWATER BASIN OUTLINE
- SWALE / DITCH
- LAYDOWN AREA

EROSION CONTROL FEATURES

- SILT FENCE 5/C-600
- EROSION CONTROL BLANKET 3/C-600
- ROCK CONSTRUCTION ENTRANCE 4/C-600
- FIBER LOG / STRAW WATTLE 1/C-600
- FILTER BERM 2/C-600
- FLOW DIRECTION
- STRAW MULCH

NOTES

1. EROSION CONTROL BLANKET TO BE PLACED ON SLOPES GREATER THAN 5%.
2. SEE SHEET C-001 FOR EROSION CONTROL NOTES AND SITE PREPARATION NOTES.
3. FOR TYPICAL SEDIMENT BASIN DETAIL SEE DETAIL 1/C602
4. INSTALL BASIN PRIOR TO UPSTREAM GRADING OPERATIONS.
5. IF PROPOSED EROSION CONTROL MEASURES AER FOUND TO BE INADEQUATE, INSTALL ADDITIONAL BMPS AS NECESSARY AND BRING TO THE ENGINEER'S ATTENTION IMMEDIATELY.
6. CONTRACTOR TO SEED AND MULCH WITHIN 7 DAYS AFTER MASS GRADING.

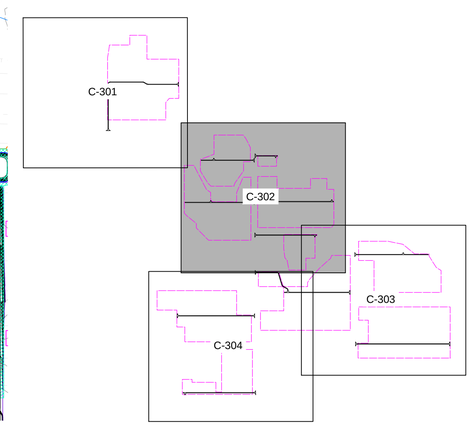

EVS, INC.
10025 Valley View Road, Suite 140
Eden Prairie, Minnesota 55344
Phone: 952-646-0236
www.evs-eng.com

CLIENT

McCARTHY

PROJECT
ARCHE SOLAR

LOCATION
22773 US HWY 20
FAYETTE, OH 43521

SUBMITTAL
90% SUBMITTAL

SCALE

NORTH

0 200 400 FT
1 2 IN

DRAWING SCALES APPLY TO 22" x 34" SHEETS

#	DATE	DESCRIPTION

PROFESSIONAL CERTIFICATION

STATE OF OHIO
NOAH SCOTT WATERHOUSE
PE.80989
REGISTERED
PROFESSIONAL ENGINEER

Noah Waterhouse, PE
DATE 08/19/2022

DRAWN BY	CHECKED BY
DG/CL/AB	BJ/NW
DATE	PROJECT #
2022.08.19	2022-013

SHEET NAME
EROSION CONTROL PLAN

SHEET NUMBER
C-302

LEGEND

EXISTING FEATURES

- PROPERTY LINE
- EASEMENT LINE
- ROAD RIGHT OF WAY
- NON PARTICIPATING BOUNDARIES
- ARCHEOLOGICAL GRADING AVOIDANCE AREA
- EDGE OF AGGREGATE ROAD
- FENCE
- TREES
- WETLANDS
- WATERBODY
- FEMA FLOODPLAIN
- RAILROAD TRACKS
- UNDERGROUND FIBER OPTICS
- OVERHEAD POWER
- UNDERGROUND TELEPHONE LINE
- DRAINTILE SEE NOTE ON C-001
- MAJOR CONTOUR
- MINOR CONTOUR
- CONTROL POINT

PROPOSED FEATURES

- AGGREGATE ROAD
- TEMPORARY AGGREGATE SURFACE
- CHAIN LINK FENCE
- TEMPORARY FENCE
- PROPOSED GATES
- WETLAND BUFFER
- LEASE BOUNDARY
- CULVERT
- GRADING EDGE
- MAJOR CONTOUR
- MINOR CONTOUR
- RIPRAP
- STORMWATER BERMS
- STORMWATER BASIN OUTLINE
- SWALE / DITCH
- LAYDOWN AREA

EROSION CONTROL FEATURES

- SILT FENCE 5/C-600
- EROSION CONTROL BLANKET 3/C-600
- ROCK CONSTRUCTION ENTRANCE 4/C-600
- FIBER LOG / STRAW WATTLE 1/C-600
- FILTER BERM 2/C-600
- FLOW DIRECTION
- STRAW MULCH

NOTES

1. EROSION CONTROL BLANKET TO BE PLACED ON SLOPES GREATER THAN 5%.
2. SEE SHEET C-001 FOR EROSION CONTROL NOTES AND SITE PREPARATION NOTES.
3. FOR TYPICAL SEDIMENT BASIN DETAIL SEE DETAIL 1/C602
4. INSTALL BASIN PRIOR TO UPSTREAM GRADING OPERATIONS.
5. IF PROPOSED EROSION CONTROL MEASURES AER FOUND TO BE INADEQUATE, INSTALL ADDITIONAL BMPS AS NECESSARY AND BRING TO THE ENGINEER'S ATTENTION IMMEDIATELY.
6. CONTRACTOR TO SEED AND MULCH WITHIN 7 DAYS AFTER MASS GRADING.

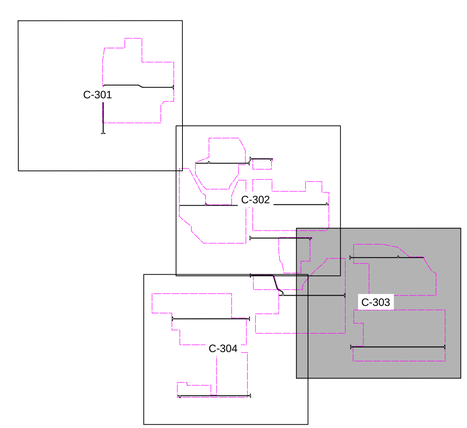

EVS, INC.
10025 Valley View Road, Suite 140
Eden Prairie, Minnesota 55344
Phone: 952-646-0236
www.evs-eng.com

CLIENT

McCARTHY

PROJECT
ARCHE SOLAR

LOCATION
22773 US HWY 20
FAYETTE, OH 43521

SUBMITTAL
90% SUBMITTAL

SCALE

NORTH

0 200 400 FT
1 2 IN

DRAWING SCALES APPLY TO 22" x 34" SHEETS

#	DATE	DESCRIPTION

PROFESSIONAL CERTIFICATION

STATE OF OHIO
NOAH SCOTT WATERHOUSE
PE.80989
REGISTERED PROFESSIONAL ENGINEER

Noah Waterhouse, PE
DATE 08/19/2022

DRAWN BY	CHECKED BY
DG/CL/AB	**BJ/NW**
DATE	PROJECT #
2022.08.19	**2022-013**

SHEET NAME
EROSION CONTROL PLAN

SHEET NUMBER
C-303

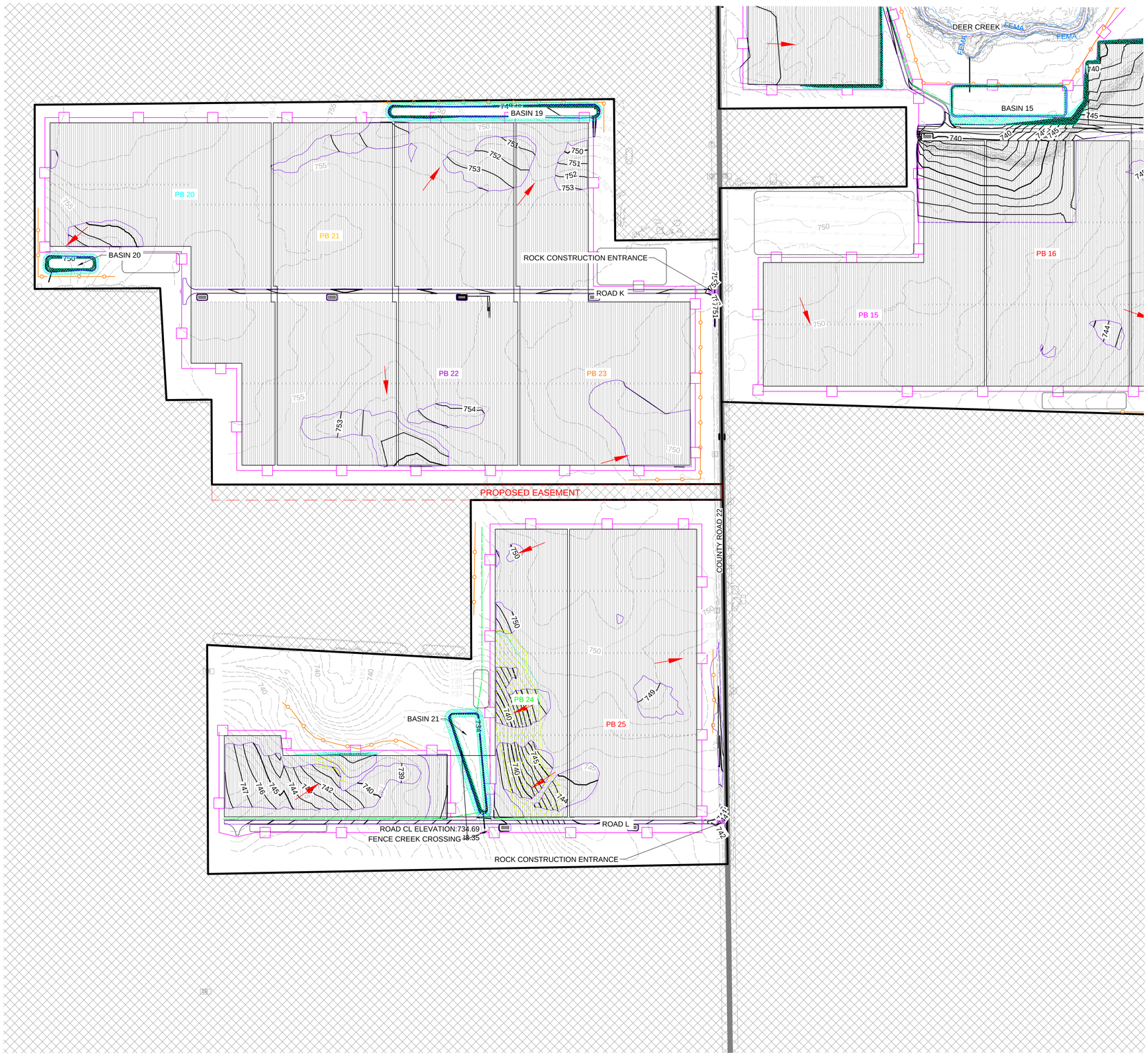

LEGEND

EXISTING FEATURES

- PROPERTY LINE
- EASEMENT LINE
- ROAD RIGHT OF WAY
- NON PARTICIPATING BOUNDARIES
- ARCHEOLOGICAL GRADING AVOIDANCE AREA
- EDGE OF AGGREGATE ROAD
- FENCE
- TREES
- WETLANDS
- WATERBODY
- FEMA FLOODPLAIN
- RAILROAD TRACKS
- UNDERGROUND FIBER OPTICS
- OVERHEAD POWER
- UNDERGROUND TELEPHONE LINE
- DRAINTILE SEE NOTE ON C-001
- MAJOR CONTOUR
- MINOR CONTOUR
- CONTROL POINT

PROPOSED FEATURES

- AGGREGATE ROAD
- TEMPORARY AGGREGATE SURFACE
- CHAIN LINK FENCE
- TEMPORARY FENCE
- PROPOSED GATES
- WETLAND BUFFER
- LEASE BOUNDARY
- CULVERT
- GRADING EDGE
- MAJOR CONTOUR
- MINOR CONTOUR
- RIPRAP
- STORMWATER BERMS
- STORMWATER BASIN OUTLINE
- SWALE / DITCH
- LAYDOWN AREA

EROSION CONTROL FEATURES

- SILT FENCE 5/C-600
- EROSION CONTROL BLANKET 3/C-600
- ROCK CONSTRUCTION ENTRANCE 4/C-600
- FIBER LOG / STRAW WATTLE 1/C-600
- FILTER BERM 2/C-600
- FLOW DIRECTION
- STRAW MULCH

NOTES

1. EROSION CONTROL BLANKET TO BE PLACED ON SLOPES GREATER THAN 5%.
2. SEE SHEET C-001 FOR EROSION CONTROL NOTES AND SITE PREPARATION NOTES.
3. FOR TYPICAL SEDIMENT BASIN DETAIL SEE DETAIL 1/C602
4. INSTALL BASIN PRIOR TO UPSTREAM GRADING OPERATIONS.
5. IF PROPOSED EROSION CONTROL MEASURES AER FOUND TO BE INADEQUATE, INSTALL ADDITIONAL BMPS AS NECESSARY AND BRING TO THE ENGINEER'S ATTENTION IMMEDIATELY.
6. CONTRACTOR TO SEED AND MULCH WITHIN 7 DAYS AFTER MASS GRADING.

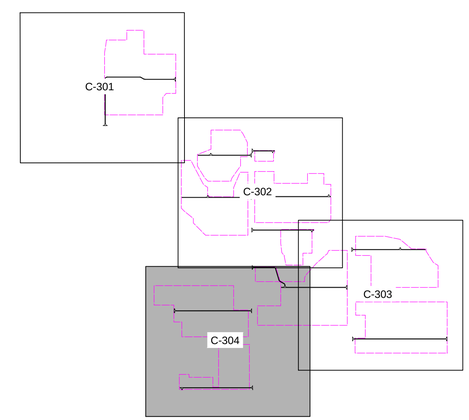

EVS, INC.
10025 Valley View Road, Suite 140
Eden Prairie, Minnesota 55344
Phone: 952-646-0236
www.evs-eng.com

CLIENT

McCARTHY

PROJECT
ARCHE SOLAR

LOCATION
22773 US HWY 20
FAYETTE, OH 43521

SUBMITTAL
90% SUBMITTAL

SCALE

NORTH

0 200 400 FT
1 2 IN

DRAWING SCALES APPLY TO 22" x 34" SHEETS

#	DATE	DESCRIPTION

PROFESSIONAL CERTIFICATION

STATE OF OHIO
NOAH SCOTT WATERHOUSE
PE.80989
REGISTERED
PROFESSIONAL ENGINEER

Noah Waterhouse, PE
DATE 08/19/2022

DRAWN BY	CHECKED BY
DG/CL/AB	BJ/NW
DATE	PROJECT #
2022.08.19	2022-013

SHEET NAME
EROSION CONTROL PLAN

SHEET NUMBER
C-304

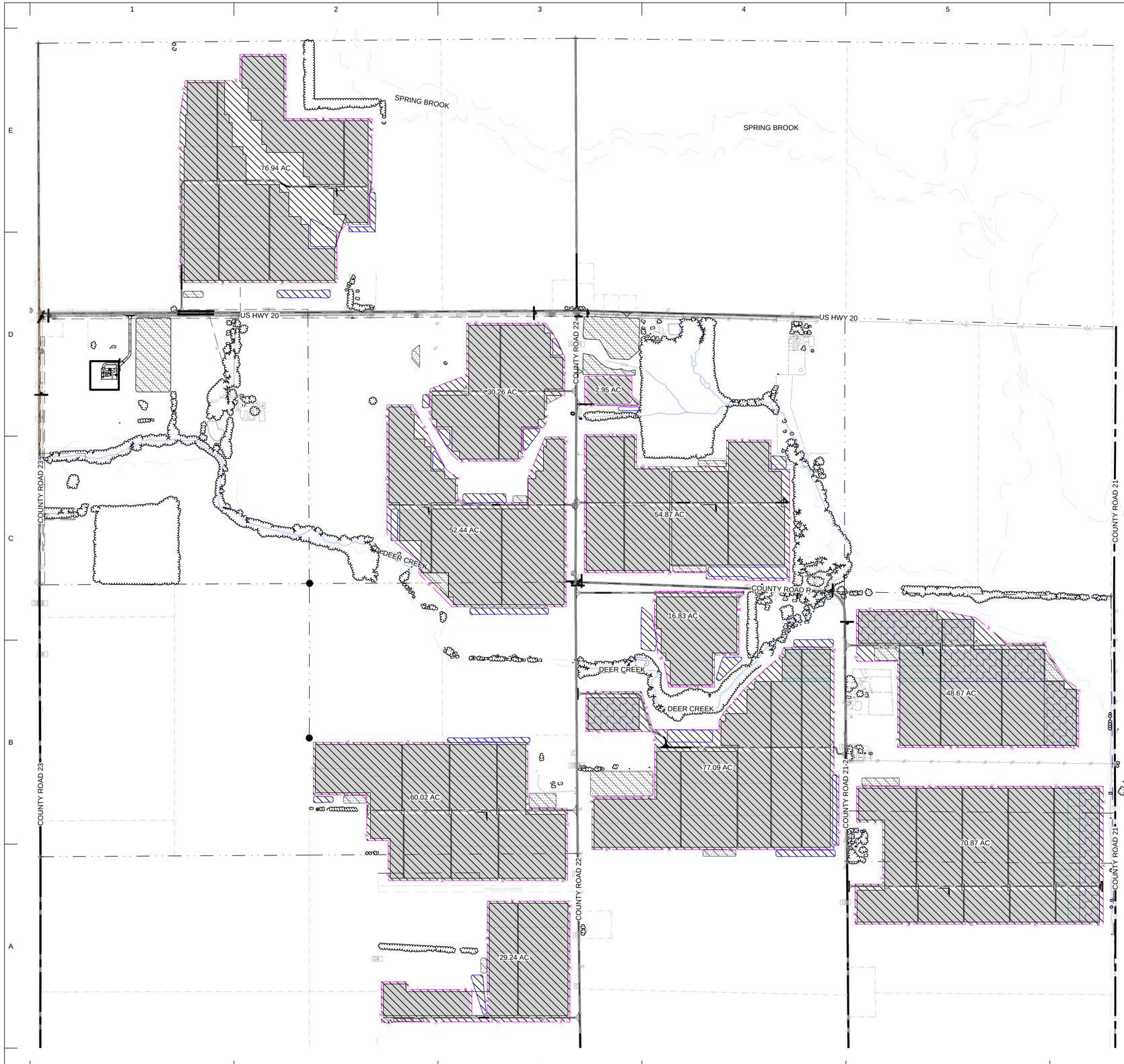

LEGEND

EXISTING FEATURES

- PROPERTY LINE
- EASEMENT LINE
- ROAD RIGHT OF WAY
- NON PARTICIPATING BOUNDARIES
- ARCHEOLOGICAL GRADING AVOIDANCE AREA
- EDGE OF AGGREGATE ROAD
- FENCE
- TREES
- WETLANDS
- WATERBODY
- FEMA FLOODPLAIN
- RAILROAD TRACKS
- UNDERGROUND FIBER OPTICS
- OVERHEAD POWER
- UNDERGROUND TELEPHONE LINE
- DRAINTILE SEE NOTE ON C-001
- MAJOR CONTOUR
- MINOR CONTOUR
- CONTROL POINT

PROPOSED FEATURES

- AGGREGATE ROAD
- TEMPORARY AGGREGATE SURFACE
- CHAIN LINK FENCE
- TEMPORARY FENCE
- PROPOSED GATES
- WETLAND BUFFER
- LEASE BOUNDARY
- CULVERT
- GRADING EDGE
- MAJOR CONTOUR
- MINOR CONTOUR
- RIPRAP
- STORMWATER BERMS
- STORMWATER BASIN OUTLINE
- SWALE / DITCH

SEEDING FEATURES

- SEED MIX (507 AC.)

EVS, INC.
10025 Valley View Road, Suite 140
Eden Prairie, Minnesota 55344
Phone: 952-646-0236
www.evs-eng.com

CLIENT

McCARTHY

PROJECT
ARCHE SOLAR

LOCATION
22773 US HWY 20
FAYETTE, OH 43521

SUBMITTAL
90% SUBMITTAL

SCALE

NORTH

0 500 1000 FT
1 2 IN

DRAWING SCALES APPLY TO 22" x 34" SHEETS

#	DATE	DESCRIPTION

PROFESSIONAL CERTIFICATION

STATE OF OHIO
NOAH SCOTT WATERHOUSE
PE.80989
REGISTERED PROFESSIONAL ENGINEER

Noah Waterhouse, PE
DATE 08/19/2022

DRAWN BY	CHECKED BY
DG/CL/AB	BJ/NW
DATE	PROJECT #
2022.08.19	2022-013

SHEET NAME
RESTORATION & VEGETATION PLAN

SHEET NUMBER
C-400

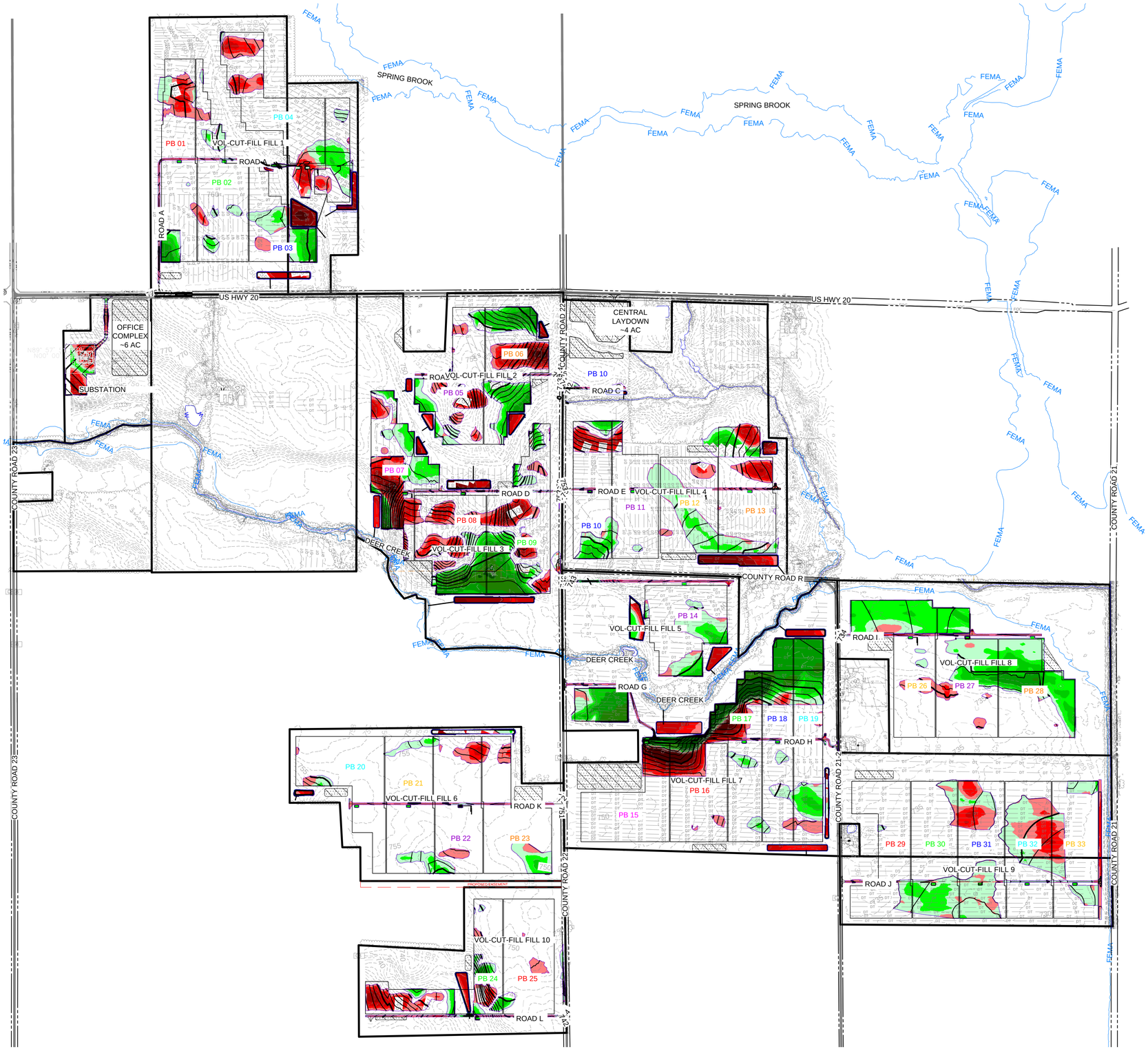

LEGEND

EXISTING FEATURES

- PROPERTY LINE
- EASEMENT LINE
- ROAD RIGHT OF WAY
- NON PARTICIPATING BOUNDARIES
- ARCHEOLOGICAL GRADING AVOIDANCE AREA
- EDGE OF AGGREGATE ROAD
- FENCE
- TREES
- WETLANDS
- WATERBODY
- FEMA FLOODPLAIN
- RAILROAD TRACKS
- UNDERGROUND FIBER OPTICS
- OVERHEAD POWER
- UNDERGROUND TELEPHONE LINE
- DRAINTILE SEE NOTE ON C-001
- MAJOR CONTOUR
- MINOR CONTOUR
- CONTROL POINT

PROPOSED FEATURES

- AGGREGATE ROAD
- TEMPORARY AGGREGATE SURFACE
- CHAIN LINK FENCE
- TEMPORARY FENCE
- PROPOSED GATES
- WETLAND BUFFER
- LEASE BOUNDARY
- CULVERT
- GRADING EDGE
- MAJOR CONTOUR
- MINOR CONTOUR
- RIPRAP
- STORMWATER BERMS
- STORMWATER BASIN OUTLINE
- SWALE / DITCH

Arche Cut/Fill Heat Map

Range	Min. Elevation	Max. Elevation	Area [sf]	Vol [CY]	Color
1	-7.6	-4.0	100298	3380	
2	-4.0	-3.0	168593	6553	
3	-3.0	-2.0	217442	13498	
4	-2.0	-1.0	667184	28861	
5	-1.0	-0.5	673919	27016	
6	-0.5	0.0	1550594	45807	
7	0.0	0.5	2213761	74478	
8	0.5	1.0	1364226	42369	
9	1.0	2.0	862833	41782	
10	2.0	3.0	484671	20440	
11	3.0	4.0	204075	7548	
12	4.0	9.8	123092	7496	

Zone	90% 2D Area [SF]	90% Cut [CY]	90% Fill [CY]	30% Net [CY]		60% Net [CY]		90% Net [CY]	
1	988196	15960	10898	5062	(Long)	-508	(Short)	5,062	(Long)
2	664,063	12,805	15,101	-2,296	(Long)	2,381	(Long)	-2,296	(Short)
3	1,380,920	31,908	38,616	-6,708	(Long)	-29,890	(Short)	-6,708	(Short)
4	915,028	15,728	10,192	5,536	(Long)	7,642	(Long)	5,536	(Long)
5	314,225	2,577	4,081	-1,504	(Short)	-28,368	(Short)	-1,504	(Short)
6	393,648	3,287	3,192	95	(Long)	5,350	(Long)	95	(Long)
7	1,374,856	30,020	69,223	-39,203	(Long)	-19,269	(Short)	-39,203	(Short)
8	1,024,450	1,284	25,500	-24,216	(Short)	-34,008	(Short)	-24,216	(Short)
9	1,053,317	5,954	6,172	-218	(Short)	-15,605	(Short)	-218	(Short)
10	352,541	6,195	2,836	3,359	(Long)	6,079	(Long)	3,359	(Long)
Overall	**8,461,244**	**125,718**	**185,811**	**18,727**	**(Long)**	**-106,196**	**(Short)**	**-60093**	**(Short)**

EVS, INC.
10025 Valley View Road, Suite 140
Eden Prairie, Minnesota 55344
Phone: 952-646-0236
www.evs-eng.com

CLIENT
McCARTHY

PROJECT
ARCHE SOLAR

LOCATION
22773 US HWY 20
FAYETTE, OH 43521

SUBMITTAL
90% SUBMITTAL

SCALE
NORTH
0 500 1000 FT
1 2 IN
DRAWING SCALES APPLY TO 22" x 34" SHEETS

#	DATE	DESCRIPTION

PROFESSIONAL CERTIFICATION
STATE OF OHIO
NOAH SCOTT WATERHOUSE
PE.80989
REGISTERED
PROFESSIONAL ENGINEER

Noah Waterhouse, PE
DATE 08/19/2022

DRAWN BY **DG/CL/AB**
CHECKED BY **BJ/NW**
DATE **2022.08.19**
PROJECT # **2022-013**

SHEET NAME
CUT FILL PLAN

SHEET NUMBER
C-500

LEGEND

EXISTING FEATURES

- PROPERTY LINE
- EASEMENT LINE
- ROAD RIGHT OF WAY
- NON PARTICIPATING BOUNDARIES
- ARCHEOLOGICAL GRADING AVOIDANCE AREA
- EDGE OF AGGREGATE ROAD
- FENCE
- TREES
- WETLANDS
- WATERBODY
- FEMA FLOODPLAIN
- RAILROAD TRACKS
- UNDERGROUND FIBER OPTICS
- OVERHEAD POWER
- UNDERGROUND TELEPHONE LINE
- DRAINTILE SEE NOTE ON C-001
- MAJOR CONTOUR
- MINOR CONTOUR
- CONTROL POINT

PROPOSED FEATURES

- AGGREGATE ROAD
- TEMPORARY AGGREGATE SURFACE
- CHAIN LINK FENCE
- TEMPORARY FENCE
- PROPOSED GATES
- WETLAND BUFFER
- LEASE BOUNDARY
- CULVERT
- GRADING EDGE
- MAJOR CONTOUR
- MINOR CONTOUR
- RIPRAP
- STORMWATER BERMS
- STORMWATER BASIN OUTLINE
- SWALE / DITCH

Arche Cut/Fill Heat Map

Range	Min. Elevation	Max. Elevation	Area [sf]	Vol [CY]	Color
1	-7.6	-4.0	100298	3380	
2	-4.0	-3.0	168593	6553	
3	-3.0	-2.0	217442	13498	
4	-2.0	-1.0	667184	28861	
5	-1.0	-0.5	673919	27016	
6	-0.5	0.0	1550594	45807	
7	0.0	0.5	2213761	74478	
8	0.5	1.0	1364226	42369	
9	1.0	2.0	862833	41782	
10	2.0	3.0	484671	20440	
11	3.0	4.0	204075	7548	
12	4.0	9.8	123092	7496	

EVS, INC.
10025 Valley View Road, Suite 140
Eden Prairie, Minnesota 55344
Phone: 952-646-0236
www.evs-eng.com

CLIENT

McCARTHY

PROJECT
ARCHE SOLAR

LOCATION
22773 US HWY 20
FAYETTE, OH 43521

SUBMITTAL
90% SUBMITTAL

SCALE

NORTH

0 60 120 FT
1 2 IN

DRAWING SCALES APPLY TO 22" x 34" SHEETS

#	DATE	DESCRIPTION

PROFESSIONAL CERTIFICATION

STATE OF OHIO
NOAH SCOTT WATERHOUSE
PE.80989
REGISTERED
PROFESSIONAL ENGINEER

Noah Waterhouse, PE
DATE 08/19/2022

DRAWN BY **DG/CL/AB**
CHECKED BY **BJ/NW**
DATE **2022.08.19**
PROJECT # **2022-013**

SHEET NAME
CUT FILL SUBSTATION

SHEET NUMBER
C-501

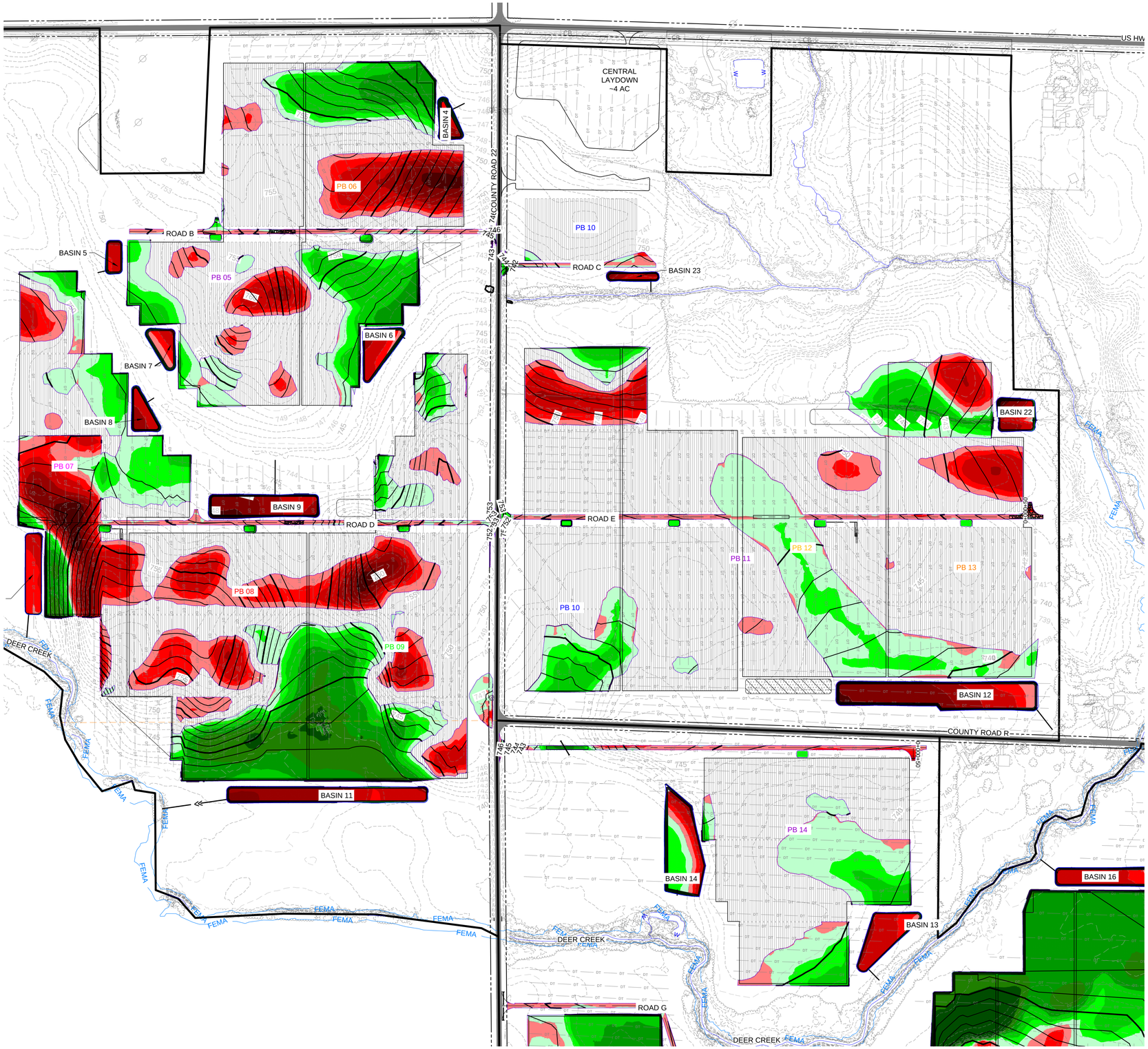

LEGEND

EXISTING FEATURES

- PROPERTY LINE
- EASEMENT LINE
- ROAD RIGHT OF WAY
- NON PARTICIPATING BOUNDARIES
- ARCHEOLOGICAL GRADING AVOIDANCE AREA
- EDGE OF AGGREGATE ROAD
- FENCE
- TREES
- WETLANDS
- WATERBODY
- FEMA FLOODPLAIN
- RAILROAD TRACKS
- UNDERGROUND FIBER OPTICS
- OVERHEAD POWER
- UNDERGROUND TELEPHONE LINE
- DRAINTILE SEE NOTE ON C-001
- MAJOR CONTOUR
- MINOR CONTOUR
- CONTROL POINT

PROPOSED FEATURES

- AGGREGATE ROAD
- TEMPORARY AGGREGATE SURFACE
- CHAIN LINK FENCE
- TEMPORARY FENCE
- PROPOSED GATES
- WETLAND BUFFER
- LEASE BOUNDARY
- CULVERT
- GRADING EDGE
- MAJOR CONTOUR
- MINOR CONTOUR
- RIPRAP
- STORMWATER BERMS
- STORMWATER BASIN OUTLINE
- SWALE / DITCH
- LAYDOWN AREA

Arche Cut/Fill Heat Map

Range	Min. Elevation	Max. Elevation	Area [sf]	Vol [CY]	Color
1	-7.6	-4.0	100298	3380	
2	-4.0	-3.0	168593	6553	
3	-3.0	-2.0	217442	13498	
4	-2.0	-1.0	667184	28861	
5	-1.0	-0.5	673919	27016	
6	-0.5	0.0	1550594	45807	
7	0.0	0.5	2213761	74478	
8	0.5	1.0	1364226	42369	
9	1.0	2.0	862833	41782	
10	2.0	3.0	484671	20440	
11	3.0	4.0	204075	7548	
12	4.0	9.8	123092	7496	

EVS, INC.
10025 Valley View Road, Suite 140
Eden Prairie, Minnesota 55344
Phone: 952-646-0236
www.evs-eng.com

CLIENT

McCARTHY

PROJECT
ARCHE SOLAR

LOCATION
22773 US HWY 20
FAYETTE, OH 43521

SUBMITTAL
90% SUBMITTAL

SCALE

NORTH

0 200 400 FT
1 2 IN

DRAWING SCALES APPLY TO 22" x 34" SHEETS

#	DATE	DESCRIPTION

PROFESSIONAL CERTIFICATION

STATE OF OHIO
NOAH SCOTT WATERHOUSE
PE.80989
REGISTERED PROFESSIONAL ENGINEER

Noah Waterhouse, PE
DATE 08/19/2022

DRAWN BY	CHECKED BY
DG/CL/AB	BJ/NW
DATE	PROJECT #
2022.08.19	2022-013

SHEET NAME
CUT FILL PLAN

SHEET NUMBER
C-502

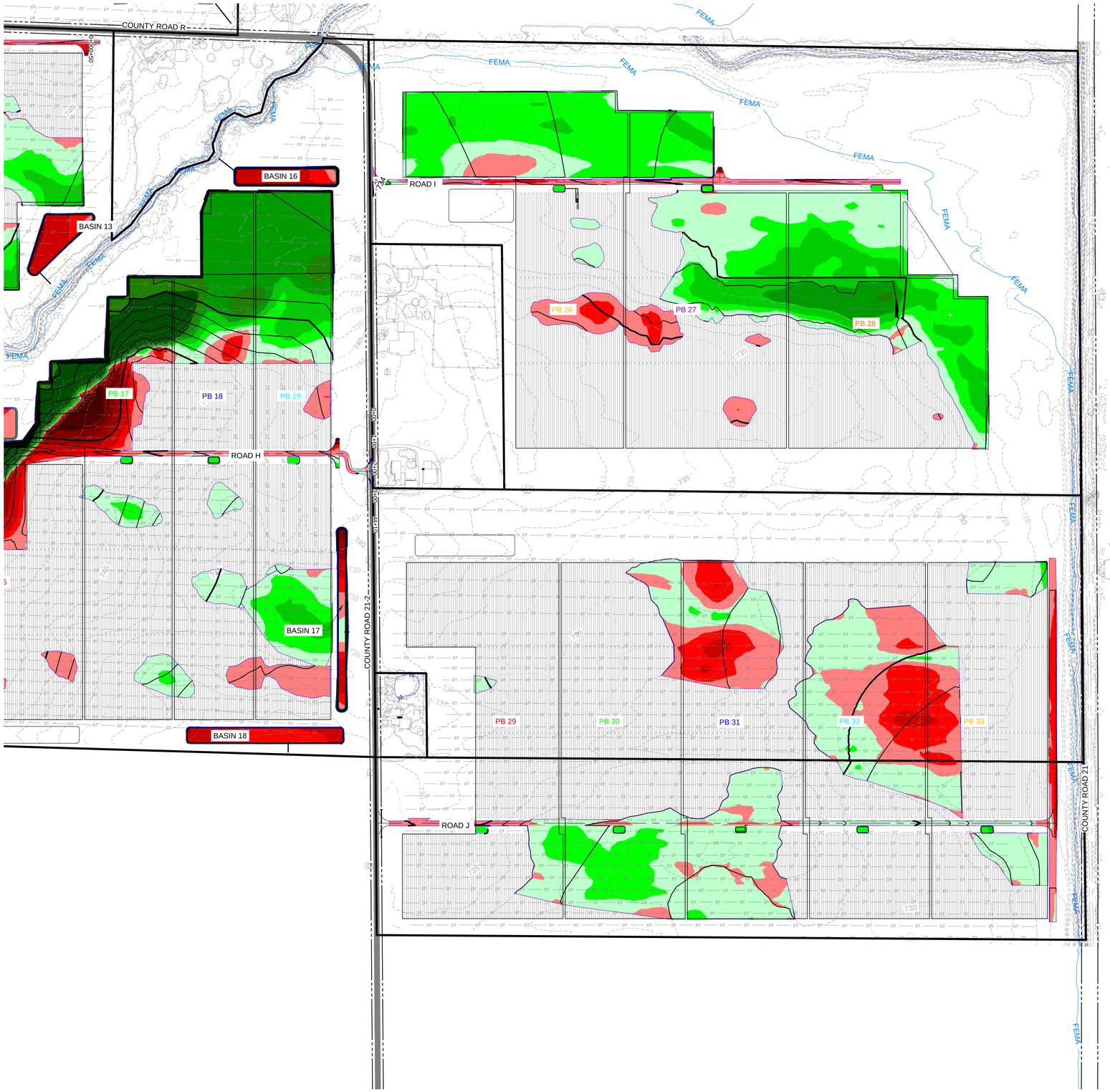

LEGEND

EXISTING FEATURES

- PROPERTY LINE
- EASEMENT LINE
- ROAD RIGHT OF WAY
- NON PARTICIPATING BOUNDARIES
- ARCHEOLOGICAL GRADING AVOIDANCE AREA
- EDGE OF AGGREGATE ROAD
- FENCE
- TREES
- WETLANDS
- WATERBODY
- FEMA FLOODPLAIN
- RAILROAD TRACKS
- UNDERGROUND FIBER OPTICS
- OVERHEAD POWER
- UNDERGROUND TELEPHONE LINE
- DRAINTILE SEE NOTE ON C-001
- MAJOR CONTOUR
- MINOR CONTOUR
- CONTROL POINT

PROPOSED FEATURES

- AGGREGATE ROAD
- TEMPORARY AGGREGATE SURFACE
- CHAIN LINK FENCE
- TEMPORARY FENCE
- PROPOSED GATES
- WETLAND BUFFER
- LEASE BOUNDARY
- CULVERT
- GRADING EDGE
- MAJOR CONTOUR
- MINOR CONTOUR
- RIPRAP
- STORMWATER BERMS
- STORMWATER BASIN OUTLINE
- SWALE / DITCH
- LAYDOWN AREA

Arche Cut/Fill Heat Map

Range	Min. Elevation	Max. Elevation	Area [sf]	Vol [CY]	Color
1	-7.6	-4.0	100298	3380	
2	-4.0	-3.0	168593	6553	
3	-3.0	-2.0	217442	13498	
4	-2.0	-1.0	667184	28861	
5	-1.0	-0.5	673919	27016	
6	-0.5	0.0	1550594	45807	
7	0.0	0.5	2213761	74478	
8	0.5	1.0	1364226	42369	
9	1.0	2.0	862833	41782	
10	2.0	3.0	484671	20440	
11	3.0	4.0	204075	7548	
12	4.0	9.8	123092	7496	

EVS, INC.
10025 Valley View Road, Suite 140
Eden Prairie, Minnesota 55344
Phone: 952-646-0236
www.evs-eng.com

CLIENT
McCARTHY

PROJECT
ARCHE SOLAR

LOCATION
22773 US HWY 20
FAYETTE, OH 43521

SUBMITTAL
90% SUBMITTAL

SCALE
NORTH
0 200 400 FT
1 2 IN
DRAWING SCALES APPLY TO 22" x 34" SHEETS

#	DATE	DESCRIPTION

PROFESSIONAL CERTIFICATION
STATE OF OHIO
NOAH SCOTT WATERHOUSE
PE.80989
REGISTERED PROFESSIONAL ENGINEER

Noah Waterhouse, PE
DATE 08/19/2022

DRAWN BY **DG/CL/AB**
CHECKED BY **BJ/NW**
DATE **2022.08.19**
PROJECT # **2022-013**

SHEET NAME
CUT FILL PLAN

SHEET NUMBER
C-503

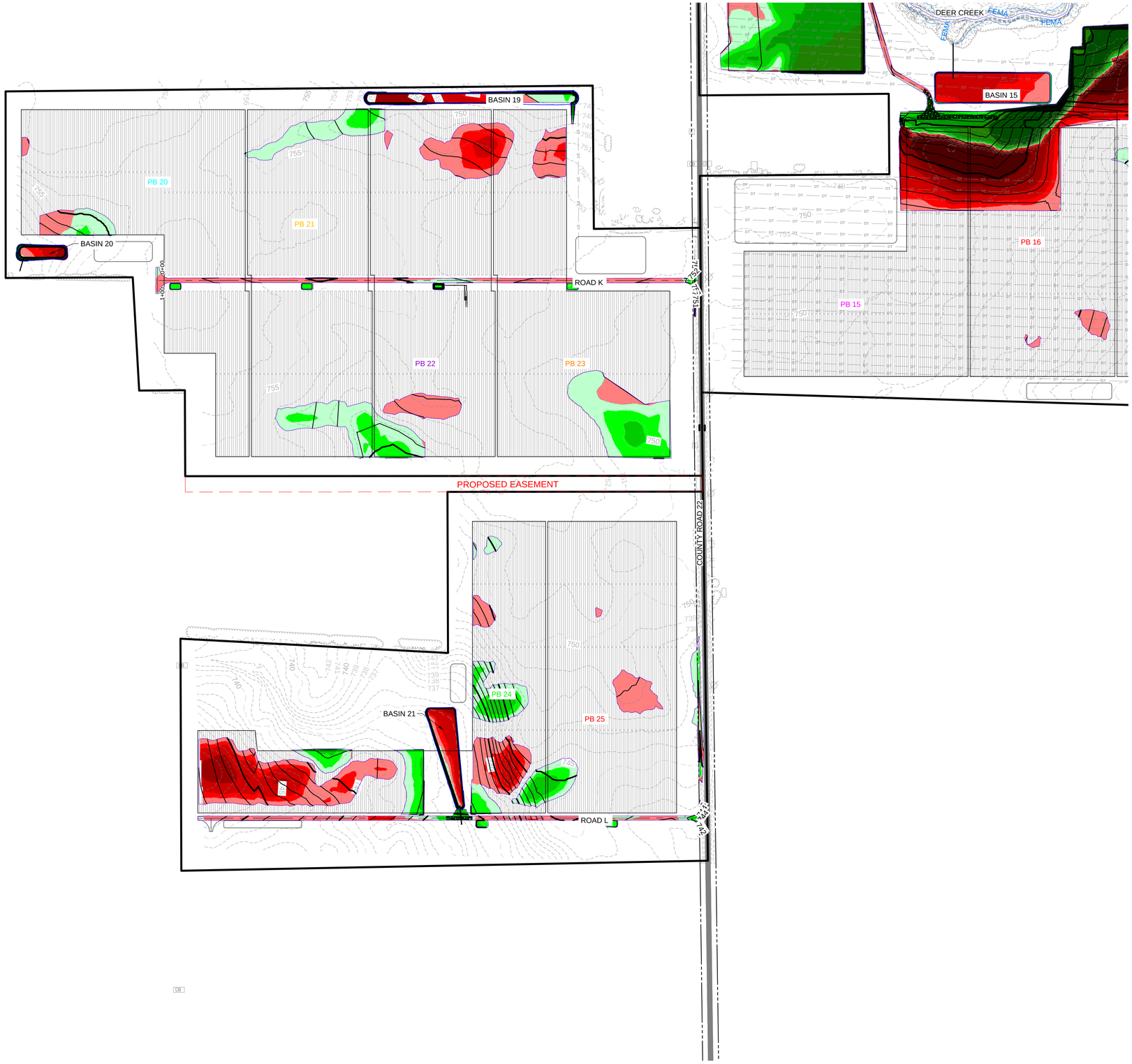

LEGEND

EXISTING FEATURES

- PROPERTY LINE
- EASEMENT LINE
- ROAD RIGHT OF WAY
- NON PARTICIPATING BOUNDARIES
- ARCHEOLOGICAL GRADING AVOIDANCE AREA
- EDGE OF AGGREGATE ROAD
- FENCE
- TREES
- WETLANDS
- WATERBODY
- FEMA FLOODPLAIN
- RAILROAD TRACKS
- UNDERGROUND FIBER OPTICS
- OVERHEAD POWER
- UNDERGROUND TELEPHONE LINE
- DRAINTILE SEE NOTE ON C-001
- MAJOR CONTOUR
- MINOR CONTOUR
- CONTROL POINT

PROPOSED FEATURES

- AGGREGATE ROAD
- TEMPORARY AGGREGATE SURFACE
- CHAIN LINK FENCE
- TEMPORARY FENCE
- PROPOSED GATES
- WETLAND BUFFER
- LEASE BOUNDARY
- CULVERT
- GRADING EDGE
- MAJOR CONTOUR
- MINOR CONTOUR
- RIPRAP
- STORMWATER BERMS
- STORMWATER BASIN OUTLINE
- SWALE / DITCH
- LAYDOWN AREA

Arche Cut/Fill Heat Map

Range	Min. Elevation	Max. Elevation	Area [sf]	Vol [CY]	Color
1	-7.6	-4.0	100298	3380	
2	-4.0	-3.0	168593	6553	
3	-3.0	-2.0	217442	13498	
4	-2.0	-1.0	667184	28861	
5	-1.0	-0.5	673919	27016	
6	-0.5	0.0	1550594	45807	
7	0.0	0.5	2213761	74478	
8	0.5	1.0	1364226	42369	
9	1.0	2.0	862833	41782	
10	2.0	3.0	484671	20440	
11	3.0	4.0	204075	7548	
12	4.0	9.8	123092	7496	

EVS, INC.
10025 Valley View Road, Suite 140
Eden Prairie, Minnesota 55344
Phone: 952-646-0236
www.evs-eng.com

CLIENT

McCARTHY

PROJECT
ARCHE SOLAR

LOCATION
22773 US HWY 20
FAYETTE, OH 43521

SUBMITTAL
90% SUBMITTAL

SCALE

NORTH

0 200 400 FT
1 2 IN

DRAWING SCALES APPLY TO 22" x 34" SHEETS

#	DATE	DESCRIPTION

PROFESSIONAL CERTIFICATION

STATE OF OHIO
NOAH SCOTT WATERHOUSE
PE.80989
REGISTERED
PROFESSIONAL ENGINEER

Noah Waterhouse, PE
DATE 08/19/2022

DRAWN BY **DG/CL/AB**
CHECKED BY **BJ/NW**
DATE **2022.08.19**
PROJECT # **2022-013**

SHEET NAME
CUT FILL PLAN

SHEET NUMBER
C-504

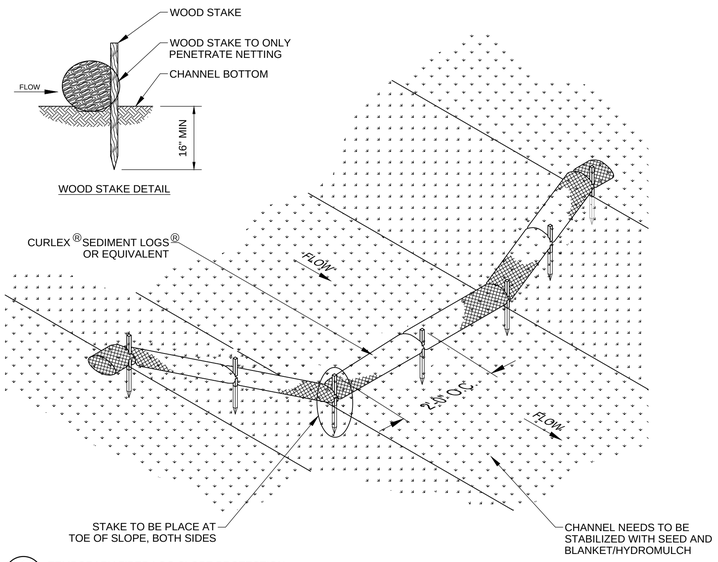

1 / C-600 TEMPORARY FIBER LOG SLOPE PROTECTION
NOT TO SCALE

Specifications
for
Filter Berm

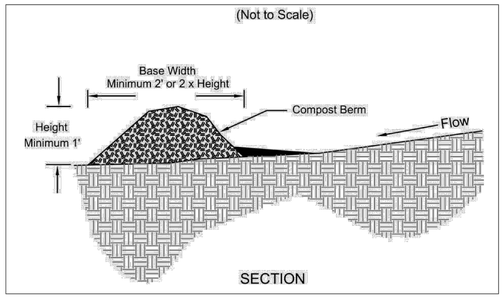

1. Materials – Compost used for filter berms shall be weed, pathogen and insect free and free of any refuse, contaminants or other materials toxic to plant growth. They shall be derived from a well-decomposed source of organic matter and consist of a particles ranging from 1/4" to 3".
2. Installation – Filter berms will be placed on a level line across slopes, generally parallel to the base of the slope or other affected area. On slopes approaching 2:1, additional berms shall be provided at the top and as needed mid-slope.

   Filter berms are not to be used in concentrated flow situations or in runoff channels.
3. Maintenance – Inspect filter berms after each significant rain, maintaining the berms in a functional condition at all times.

   Remove sediments collected at the base of the filter berms when they reach 1/3 of the exposed height of the practice.

   Where the filter berm deteriorates or fails it will be, it will be repaired or replaced with a more effective alternative.
4. Removal – Filter berms no longer needed will be dispersed on site in a manner that will facilitate seeding.

2 / C-600 TEMPORARY FILTER BERM - FROM OHIO LAND DEVELOPMENT CHAPTER 6
NOT TO SCALE

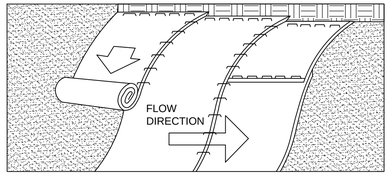

SLOPE INSTALLATION

NOTES:

1. PREPARE SOIL BEFORE INSTALLING BLANKETS. INCLUDING APPLICATION OF FERTILIZER, AND PERMANENT SEED MIX.
2. BEGIN AT THE TOP OF THE SLOPE (OR CHANNEL) BY ANCHORING THE BLANKET IN A 6" DEEP X 6" WIDE TRENCH. BACKFILL AND COMPACT THE TRENCH AFTER STAPLING.
3. ROLL THE BLANKET DOWN (STARTING AT DOWNSTREAM PROCEEDING UPSTREAM) HORIZONTALLY ACROSS THE SLOPE.
4. THE EDGES OF PARALLEL BLANKETS MUST BE STAPLED WITH AN APPROXIMATE (MIN) 4" OVERLAP.
5. WHEN BLANKETS MUST BE SPLICED DOWN THE SLOPE, PLACE BLANKETS END OVER END (SHINGLE STYLE) WITH APPROXIMATELY A (MIN) 6" OVERLAP. USE A DOUBLE ROW OF STAGGERED STAPLES 4" APART TO SECURE BLANKETS.
6. IN HIGH FLOW CHANNEL APPLICATIONS, A STAPLE CHECK SLOT IS RECOMMENDED AT 30 TO 40 FOOT INTERVALS. USE A ROW OF STAPLES 4" APART OVER ENTIRE WIDTH OF THE CHANNEL. PLACE A SECOND ROW 4" BELOW THE FIRST ROW IN A STAGGERED PATTERN.
7. THE TERMINAL END OF THE BLANKETS MUST BE ANCHORED IN A 6" DEEP X 6" WIDE TRENCH. BACKFILL AND COMPACT THE TRENCH AFTER STAPLING.

3 / C-600 TEMPORARY EROSION CONTROL BLANKET
NOT TO SCALE

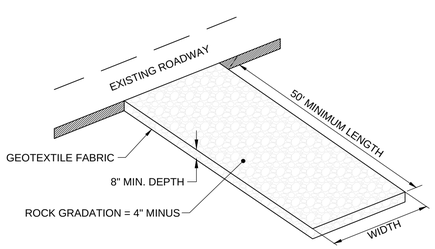

NOTES:

1. MATCH THE DRIVEWAY WIDTH AS SHOWN ON CIVIL SITE AND GRADING SHEETS
2. IF NECESSARY, PROVIDE RADIUS OR WIDEN PAD SUFFICIENTLY TO PREVENT VEHICLE TIRES FROM TRACKING OFF OF PAD WHEN ENTERING/EXITING THE SITE.
3. MAINTENANCE: ROCK CONSTRUCTION ENTRANCE THICKNESS SHALL BE CONSTANTLY MAINTAINED TO THE SPECIFIED DIMENSIONS BY ADDING ROCK. A STOCKPILE SHALL BE MAINTAINED ON SITE FOR THIS PURPOSE. AT THE END OF EACH CONSTRUCTION DAY, ALL SEDIMENT DEPOSITED ON PAVED ROADWAYS SHALL BE REMOVED AND RETURNED TO THE CONSTRUCTION SITE.

4 / C-600 TEMPORARY STABILIZED ROCK CONSTRUCTION ENTRANCE
NOT TO SCALE

Specifications
for
Silt Fence

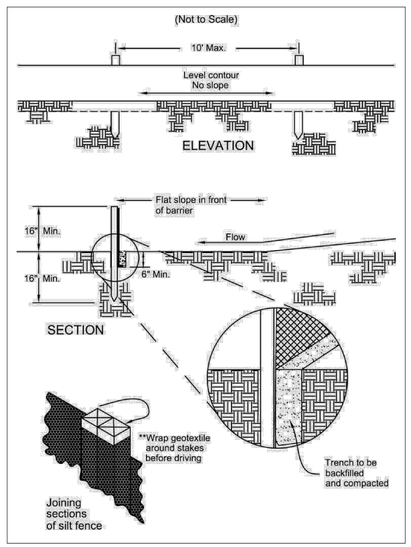

5 / C-600 TEMPORARY SILT FENCE - FROM OHIO LAND DEVELOPMENT CHAPTER 6
NOT TO SCALE

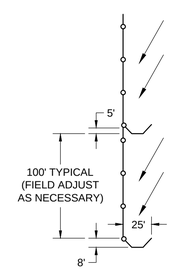

NOTES:
1. WHERE GROUND SLOPES ALONG LENGTH OF SILT FENCE, CONSTRUCT J-HOOKS AS SHOWN.

6 / C-600 SILT FENCE J-HOOK INSTALLATION
NOT TO SCALE

EVS, INC.
10025 Valley View Road, Suite 140
Eden Prairie, Minnesota 55344
Phone: 952-646-0236
www.evs-eng.com

CLIENT

PROJECT
ARCHE SOLAR

LOCATION
22773 US HWY 20
FAYETTE, OH 43521

SUBMITTAL
90% SUBMITTAL

SCALE

#	DATE	DESCRIPTION

PROFESSIONAL CERTIFICATION

STATE OF OHIO
NOAH SCOTT WATERHOUSE
PE.80989
REGISTERED PROFESSIONAL ENGINEER

Noah Waterhouse, PE
DATE 08/19/2022

DRAWN BY	CHECKED BY
DG/CL/AB	BJ/NW
DATE	PROJECT #
2022.08.19	2022-013

SHEET NAME
EROSION CONTROL DETAILS

SHEET NUMBER
C-600

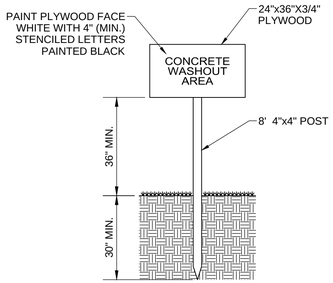

SIGN

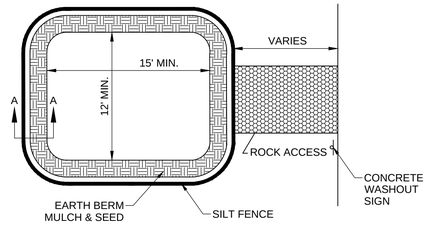

NOTE:
CONCRETE WASHOUT AREAS WILL HAVE AN IMPERMEABLE LINER TO PREVENT CONCRETE WASHOUT WATER FROM INFILTRATING/CONTACTING WITH SOIL. IMPERMEABLE LINER INCLUDES 10 MIL POLYLINER OR COMPACTED CLAY LINER. WASHOUT SYSTEMS CAN BE USED AS ALTERNATE WASHOUT AREAS.

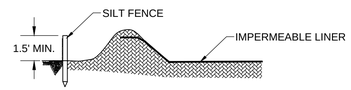

SECTION A-A

1 C-601 TEMPORARY CONCRETE WASHOUT
NOT TO SCALE

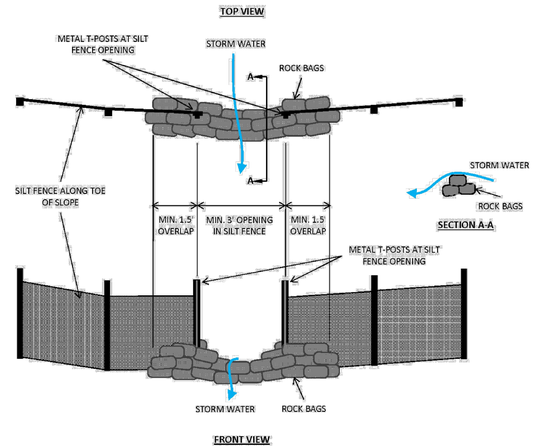

2 C-601 SILT FENCE RELIEF
NOT TO SCALE

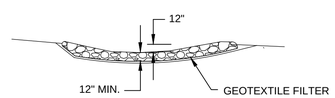

SEC. B-B

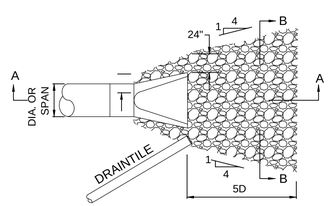

PLAN VIEW

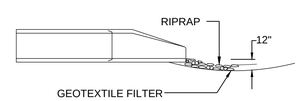

SEC. A-A

NOTE:
1. ODOT TYPE B MATERIAL QUANTITIES.
   A. 12" PIPE - 5.9 CY
   B. 15" PIPE - 6.4 CY
   C. 18" PIPE - 8.5 CY
   D. 48" PIPE - 29.6 CY
   E. 72" PIPE - 53.7 CY

3 C-601 PERMANENT RIP RAP APRON
NOT TO SCALE

EVS, INC.
10025 Valley View Road, Suite 140
Eden Prairie, Minnesota 55344
Phone: 952-646-0236
www.evs-eng.com

CLIENT

PROJECT
ARCHE SOLAR

LOCATION
22773 US HWY 20
FAYETTE, OH 43521

SUBMITTAL
90% SUBMITTAL

SCALE

#	DATE	DESCRIPTION

PROFESSIONAL CERTIFICATION

STATE OF OHIO
NOAH SCOTT WATERHOUSE
PE.80989
REGISTERED
PROFESSIONAL ENGINEER

Noah Waterhouse, PE
DATE 08/19/2022

DRAWN BY **DG/CL/AB**
CHECKED BY **BJ/NW**
DATE **2022.08.19**
PROJECT # **2022-013**

SHEET NAME
EROSION CONTROL DETAILS

SHEET NUMBER
C-601

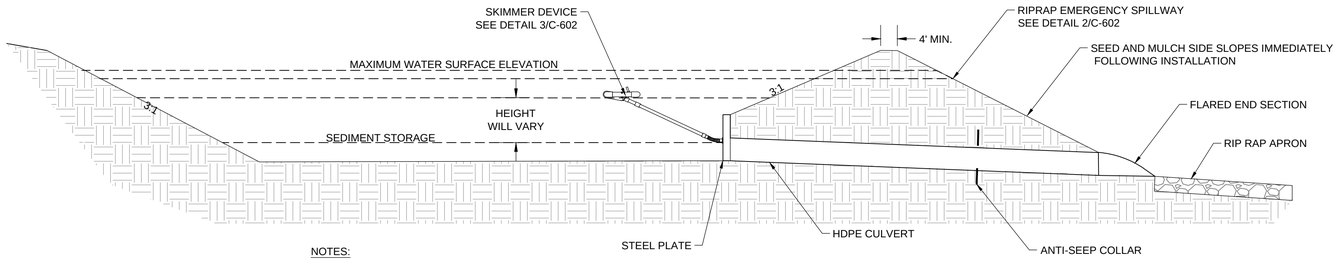

NOTES:

1. BASIN'S WATER DEPTH NOT TO EXCEED 3' AND SHALL HAVE A DRAIN DOWN TIME BETWEEN 48 HOURS AND 7 DAYS.
2. DESIGN IS BASED ON OHIO RAINWATER AND LAND DEPARTMENT CHAPTER 6 - SEDIMENT BASINS PRINCIPAL SPILLWAY DESIGN.

PERMANENT SEDIMENT BASIN

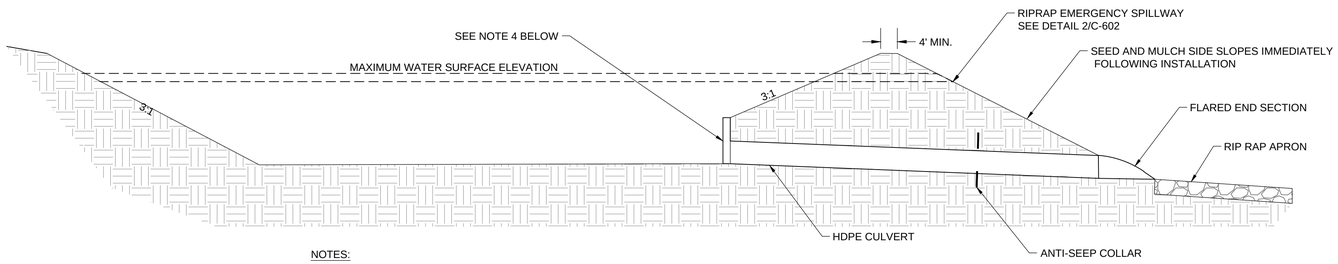

NOTES:

3. BASIN'S WATER DEPTH NOT TO EXCEED 3' AND SHALL HAVE A MINIMUM DRAWDOWN TIME OF 24 HOURS.
4. REMOVE SKIMMER AND REPLACE STEEL PLATE WITH GRATED ORIFICE. ORIFICE INVERT TO MATCH BOTTOM OF PERMANENT BASIN.
5. REMOVE ALL SEDIMENT DOWN TO DESIGN BASIN BOTTOM ELEVATION SEED WITH WATER TOLERANCE MIX.
6. SEE SWPPP FOR TABLE OF BASIN DESIGN PARAMETERS.

PERMANENT SEDIMENT BASIN

Basin	Subcatchment Area (AC)	Required Storage (CF) (2)	Designed Basin Storage (CF)	Top of Berm Elevation	Overflow Elevation	Bottom Elevation	Outlet Elevation	Length of outlet pipe	Outlet Pipe Size and Material
1	55.4	141,143	144,197	755.0	754.0	752.0	751.5	144	15" HDPE
2	12.8	34,428	36,303	756.5	755.5	754.5	752.0	270	15" HDPE
3	19.7	60,980	63,070	756.0	755.0	754.0	753.0	96	15" HDPE
4	10.1	23,184	23,200	749.0	748.0	746.0	745.3	66	15" HDPE
5	13.2	35,559	35,576	749.0	748.0	747.0	746.0	40	15" HDPE
6	5.3	12,259	12,855	749.0	748.0	742.0	741.7	20	15" HDPE
7	7.5	20,223	20,250	748.0	747.0	746.0	745.5	73	15" HDPE
8	7.9	20,069	21,773	747.0	746.0	745.0	744.0	35	15" HDPE
9	21.5	54,825	63,181	746.0	745.0	744.0	743.0	140	15" HDPE
10	6.8	17,312	18,141	742.5	-	741.5	740.0	91	15" HDPE
11	30.9	71,024	78,585	740.0	739.0	737.8	735.0	258	15" HDPE
12	49.2	133,280	184,903	740.0	739.0	738.0	737.0	110	15" HDPE
13	12.0	32,400	38,548	740.0	739.0	736.0	735.5	62	15" HDPE
14	11.5	30,700	86,971	739.0	738.0	737.0	736.5	20	15" HDPE
15	15.0	38,250	39,100	737.0	-	736.0	735.0	112	15" HDPE
16	16.7	45,117	46,090	735.0	734.0	733.0	732.0	82	15" HDPE
17 (1)	20.5	52,275	37,617	739.5	738.5	737.5	737.2	15	15" HDPE
18	22.6	60,880	64,123	737.3	736.3	735.3	735.0	35	15" HDPE
19 (1)	22.9	61,886	26,806	750.0	749.0	748.0	746.3	20	15" HDPE
20	5.0	13,444	16,198	752.0	751.0	750.0	749.6	50	15" HDPE
21	17.0	45,966	46,900	735.3	734.3	733.3	732.5	65	15" HDPE
22	7.8	19,992	29,832	738.8	737.8	736.8	736.0	20	15" HDPE
23	3.8	9,563	10,038	741.3	740.3	739.3	738.0	45	15" HDPE

NOTES:
1. BASIN 17 AND 19 CAN NOT BE MADE BIGGER DUE TO SETBACK RESTRICTIONS.
2. BASIN SIZING BASED ON OHIO EPA LAND AND RAINWATER DEVELOPMENT CHAPTER 6 - SEDIMENT BASINS
3. ALL BASINS TO REMAIN PERMANENT

1 / C-602 PERMANENT SEDIMENT BASIN PROFILES
NOT TO SCALE

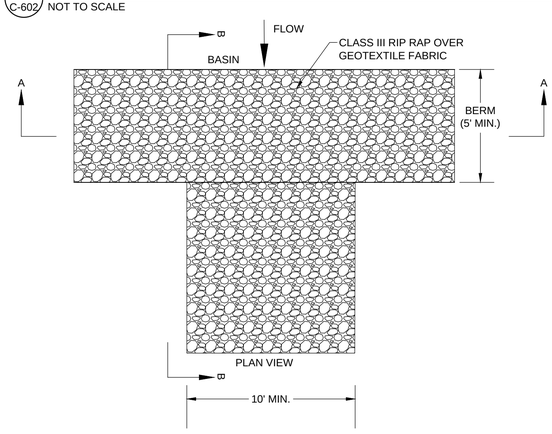

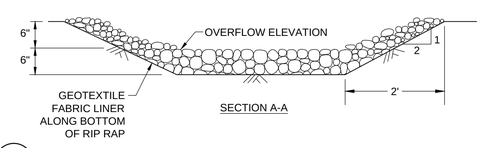

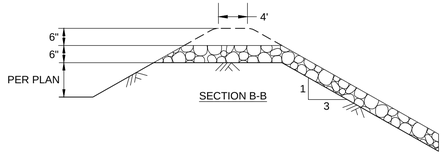

2 / C-602 PERMANENT RIP RAP EMERGENCY SPILLWAY
NOT TO SCALE

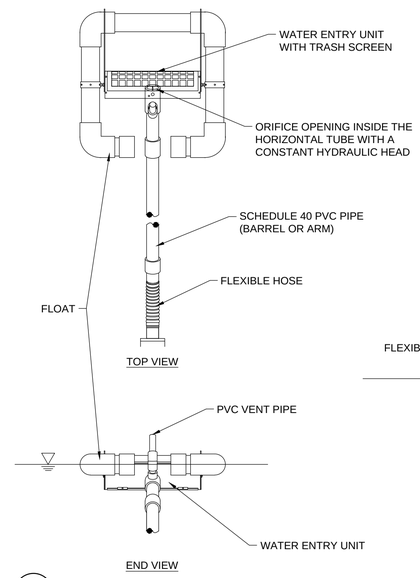

NOTES:

1. PROPER ORIFICE OPENING MUST BE SELECTED TO ENSURE SEDIMENT BASIN DRAINS IN CORRECT AMOUNT OF TIME. MODIFICATIONS MAY BE REQUIRED IF FIELD CONDITIONS WARRANT A CHANGE.
2. INSPECT SYSTEM REGULARLY TO ENSURE IT IS FUNCTIONING IN A CORRECT MANNER.

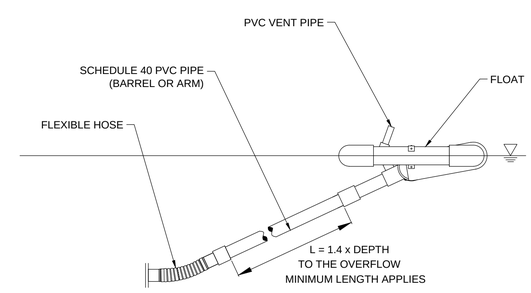

3 / C-602 TEMPORARY SEDIMENT BASIN SKIMMER
NOT TO SCALE

EVS, INC.
10025 Valley View Road, Suite 140
Eden Prairie, Minnesota 55344
Phone: 952-646-0236
www.evs-eng.com

CLIENT

McCARTHY

PROJECT
ARCHE SOLAR

LOCATION
22773 US HWY 20
FAYETTE, OH 43521

SUBMITTAL
90% SUBMITTAL

SCALE

#	DATE	DESCRIPTION

PROFESSIONAL CERTIFICATION

STATE OF OHIO
NOAH SCOTT WATERHOUSE
PE.80989
REGISTERED
PROFESSIONAL ENGINEER

Noah Waterhouse, PE
DATE 08/19/2022

DRAWN BY	CHECKED BY
DG/CL/AB	BJ/NW
DATE	PROJECT #
2022.08.19	2022-013

SHEET NAME
STORMWATER DETAILS

SHEET NUMBER
C-602

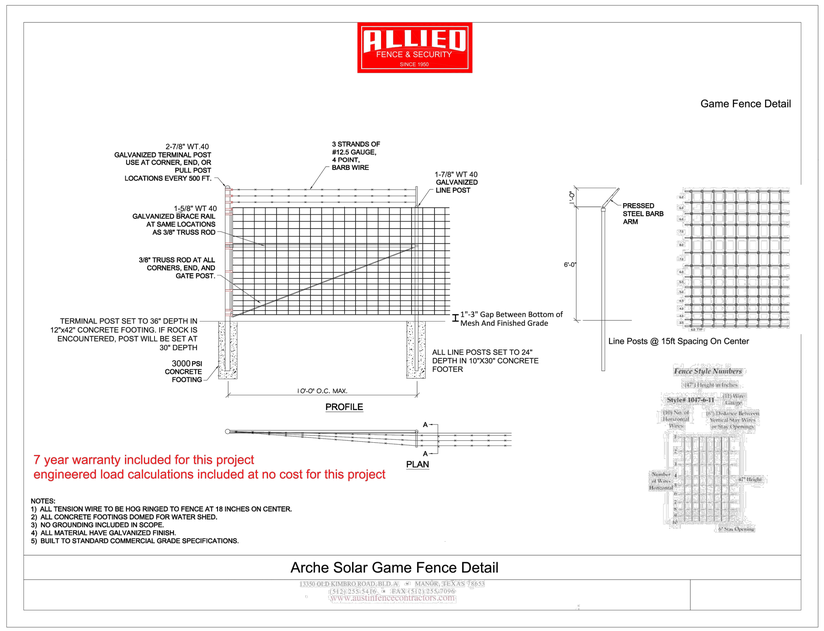

1 C-603 PERMANENT GAME FENCE DETAIL
NOT TO SCALE

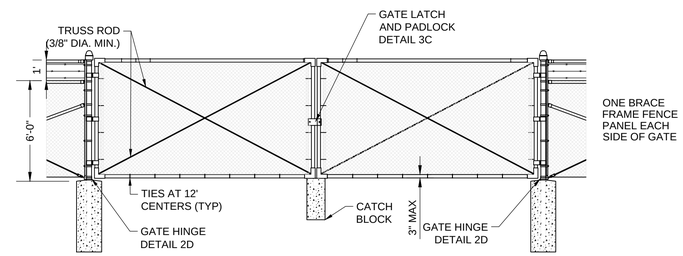

2 C-603 PERMENENT 20 AND 24 FOOT SWINGING ACCESS GATE
NOT TO SCALE

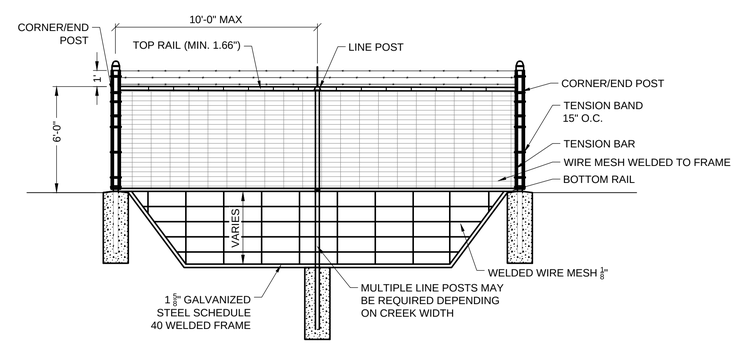

3 C-603 GAME FENCE CREEK CROSSING
NOT TO SCALE

C-603

EVS, INC.
10025 Valley View Road, Suite 140
Eden Prairie, Minnesota 55344
Phone: 952-646-0236
www.evs-eng.com

CLIENT
McCARTHY

PROJECT
ARCHE SOLAR

LOCATION
22773 US HWY 20
FAYETTE, OH 43521

SUBMITTAL
90% SUBMITTAL

SCALE

#	DATE	DESCRIPTION

PROFESSIONAL CERTIFICATION
STATE OF OHIO
NOAH SCOTT WATERHOUSE
PE.80989
REGISTERED
PROFESSIONAL ENGINEER

Noah Waterhouse, PE
DATE 08/19/2022

DRAWN BY	CHECKED BY
DG/CL/AB	BJ/NW
DATE	PROJECT #
2022.08.19	2022-013

SHEET NAME
FENCE DETAILS

SHEET NUMBER
C-603

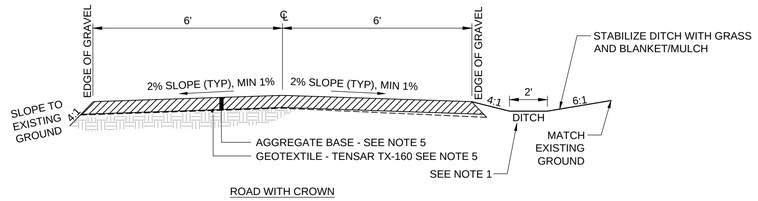

ROAD WITH CROWN

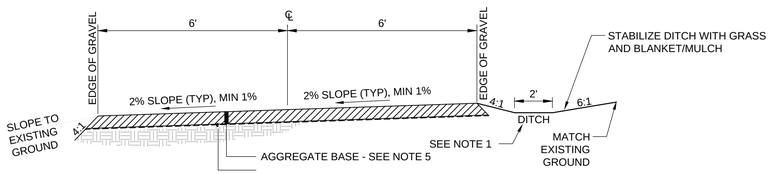

ROAD WITH SUPERELEVATION

NOTES:

1. CONSTRUCT DITCH AS SHOWN ABOVE ONLY WHERE INDICATED BY CONTOURS ON THE GRADING PLAN.
2. IN THE ABSENCE OF A ROADSIDE DITCH, SLOPE FROM EDGE OF GRAVEL TO EXISTING GROUND @ 4:1.
3. 2% CROSS SLOPE IS TYPICAL, BUT CAN BE ADJUSTED DOWN TO MATCH EXISTING GROUND SLOPE IN ORDER TO PROMOTE CONTINUED SHEET DRAINAGE ACROSS ROAD. CROSS SLOPE SHALL NOT BE LESS THAN 1%.
4. ROAD GRADES ARE TYPICALLY INTENDED TO MATCH ADJACENT GRADE ALLOWING DRAINAGE TO SHEET ON AND OFF OF ROADS EVENLY. CARE SHOULD BE TAKEN TO FIELD ADJUST ROAD GRADES OR DITCH LOCATIONS AS NECESSARY TO PREVENT RUNOFF FROM CONCENTRATING ALONG ROAD EDGES CAUSING EROSION.
5. ACCORDING TO THE TERRACON GEOTECHNICAL REPORT DATED FEBRUARY 3, 2022 - TO OBTAIN THE REQUIRED MINIMUM RUT DEPTH OF 2" EITHER 6" ODOT ITEM 304 AGGREGATE BASE OVER STABLE SUBGRADE WITH GEOTEXTILE **OR** A MINIMUM 8" ODOT ITEM 304 AGGREGATE BASE OVER STABLE SUBGRADE WITHOUT GEOTEXTILE IS REQUIRED. SEE GEOTECHNICAL REPORT FOR ADDITIONAL DETAILS ON ALLOWABLE ESALS, AND CEMENT STABILIZATION.

1 / C-604 PERMENENT TYPICAL SOLAR ACCESS ROAD
NOT TO SCALE

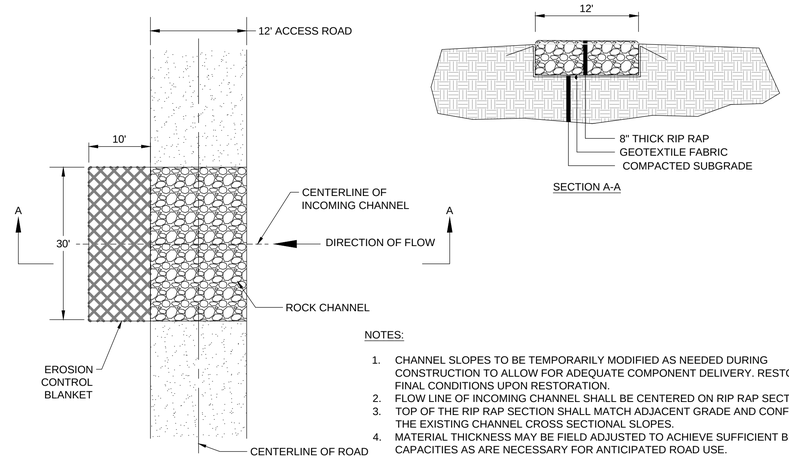

SECTION A-A

PLAN VIEW

NOTES:

1. CHANNEL SLOPES TO BE TEMPORARILY MODIFIED AS NEEDED DURING CONSTRUCTION TO ALLOW FOR ADEQUATE COMPONENT DELIVERY. RESTORE TO FINAL CONDITIONS UPON RESTORATION.
2. FLOW LINE OF INCOMING CHANNEL SHALL BE CENTERED ON RIP RAP SECTION.
3. TOP OF THE RIP RAP SECTION SHALL MATCH ADJACENT GRADE AND CONFORM TO THE EXISTING CHANNEL CROSS SECTIONAL SLOPES.
4. MATERIAL THICKNESS MAY BE FIELD ADJUSTED TO ACHIEVE SUFFICIENT BEARING CAPACITIES AS ARE NECESSARY FOR ANTICIPATED ROAD USE.

2 / C-604 PERMANENT LOW WATER CROSSING AT ACCESS ROAD
NOT TO SCALE

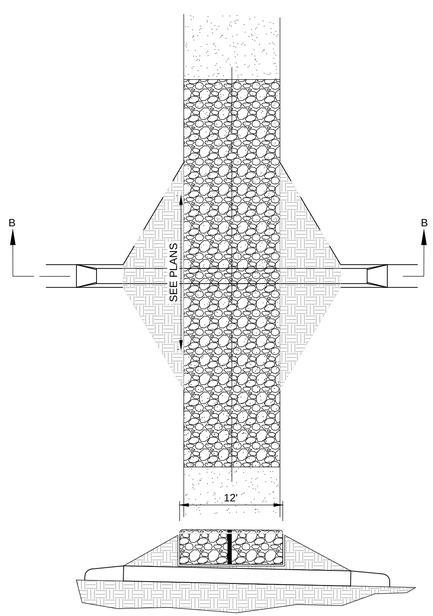

SECTION B-B

3 / C-604 PERMANENT LOW WATER CROSSING WITH CULVERT
NOT TO SCALE

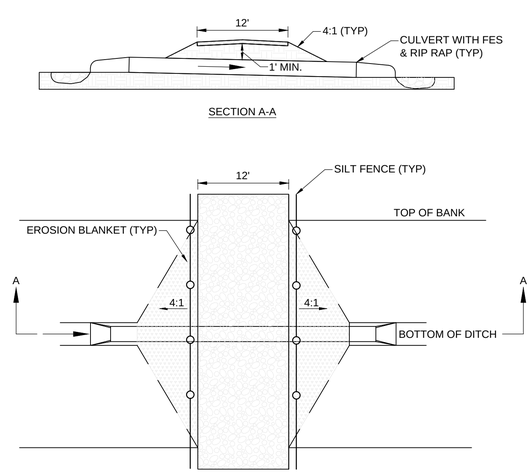

SECTION A-A

PLAN VIEW

4 / C-604 PERMANENT ACCESS ROAD CULVERT DITCH CROSSING
NOT TO SCALE

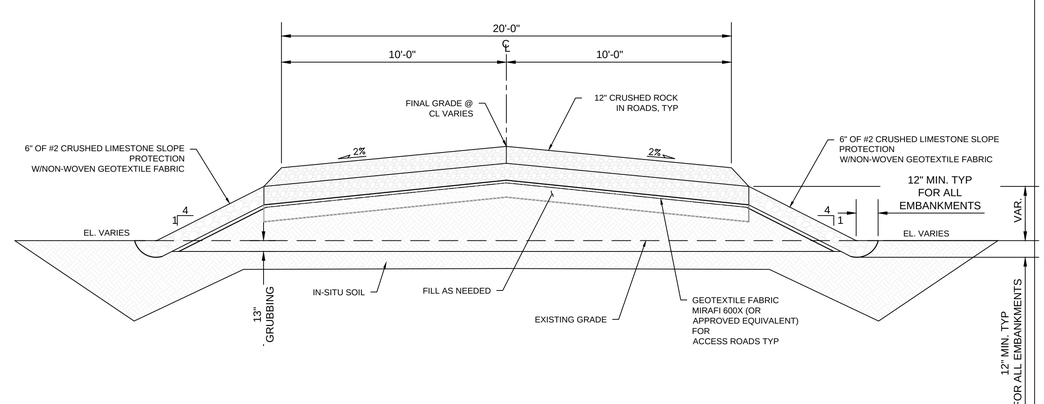

4 / C-604 SUBSTATION ACCESS ROAD
NOT TO SCALE

EVS, INC.
10025 Valley View Road, Suite 140
Eden Prairie, Minnesota 55344
Phone: 952-646-0236
www.evs-eng.com

CLIENT

McCARTHY

PROJECT
ARCHE SOLAR

LOCATION
22773 US HWY 20
FAYETTE, OH 43521

SUBMITTAL
90% SUBMITTAL

SCALE

#	DATE	DESCRIPTION

PROFESSIONAL CERTIFICATION

STATE OF OHIO
NOAH SCOTT WATERHOUSE
PE.80989
REGISTERED
PROFESSIONAL ENGINEER

Noah Waterhouse, PE
DATE 08/19/2022

DRAWN BY	CHECKED BY
DG/CL/AB	BJ/NW
DATE	PROJECT #
2022.08.19	2022-013

SHEET NAME
ROAD DETAILS

SHEET NUMBER
C-604

BASIS OF GRADING

SEE STANDARD ARRAY PILE REVEAL DETAIL FOR MAXIMUM AND MINIMUM REVEAL HEIGHTS BASED ON STRUCTURAL DESIGN, HIGH WATER ELEVATION, AND MINIMUM GROUND CLEARANCE.

NORTH

PROFILE VIEW

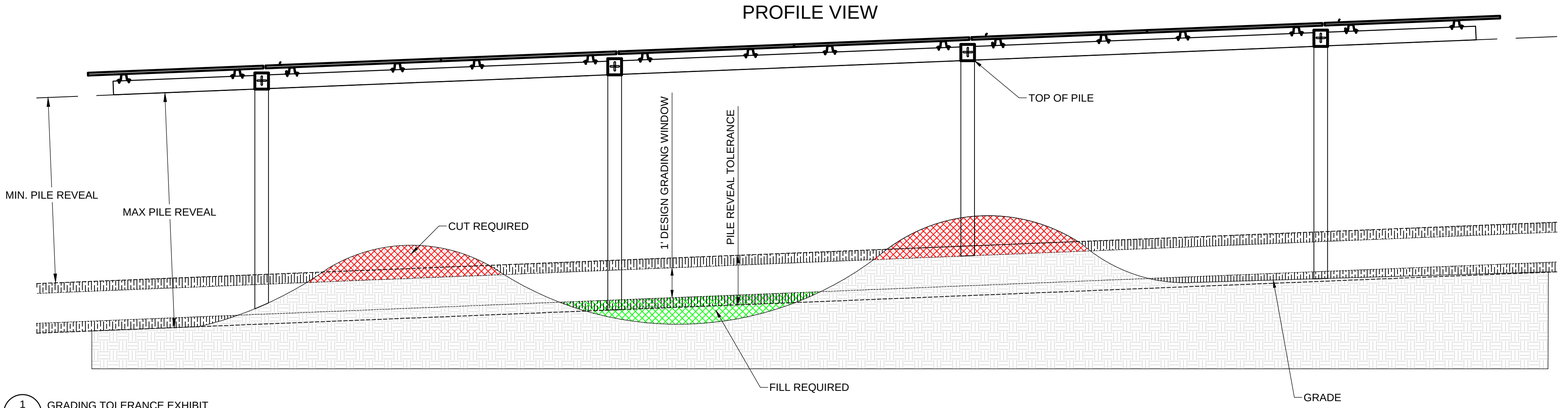

1 / C-605 GRADING TOLERANCE EXHIBIT
NOT TO SCALE

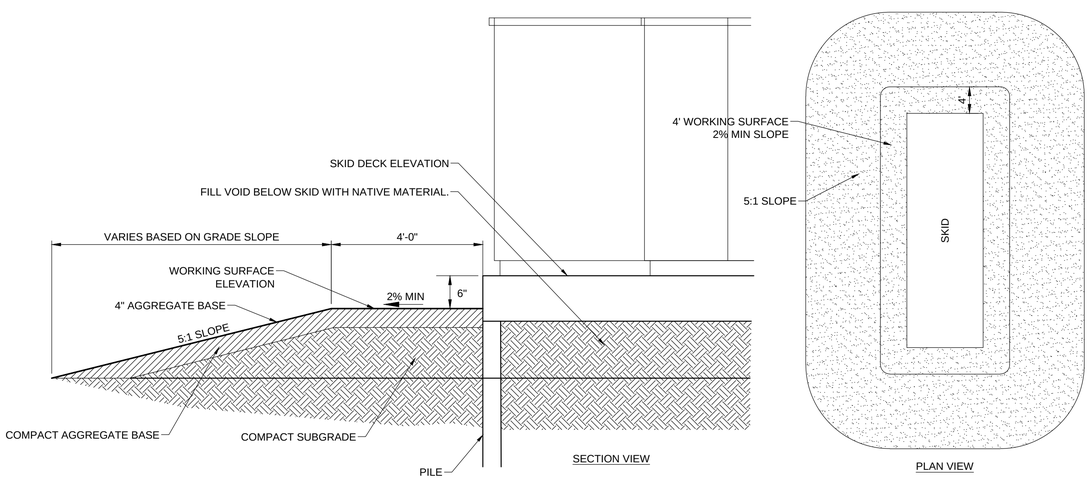

2 / C-605 EQUIPMENT SKID GRADING DETAIL
NOT TO SCALE

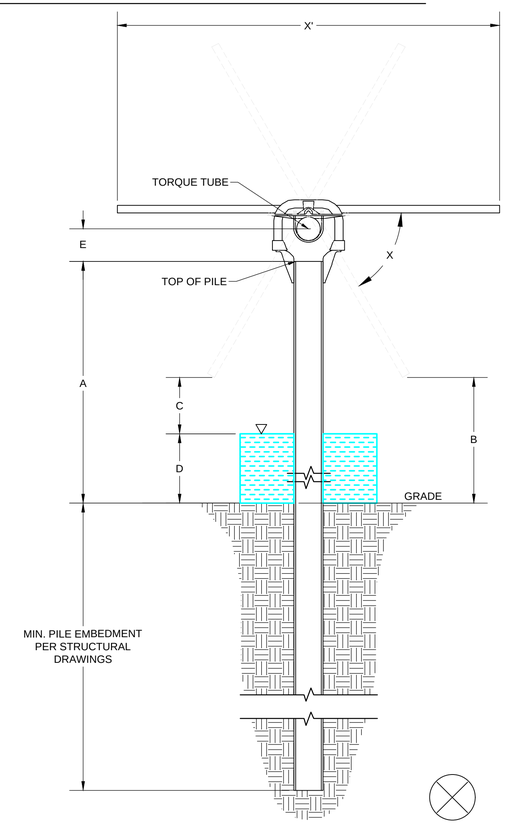

SECTION VIEW

NORTH

NOTES:

1. MODULE SHOWN AT MAXIMUM TILT.
2. MAX FLOOD DEPTH VARIES ACROSS SITE. SEE HIGH WATER LEVEL EXHIBIT.
3. TOP OF PILE TO TORQUE TUBE DIMENSION VARIES PER RACKING MANUFACTURER.
4. CONTRACTOR SHALL VERIFY ALL RACKING DIMENSIONS WITH RACKING MANUFACTURER.
5. CONTRACTOR SHALL CONTACT STRUCTURAL E.O.R. IF REQUIRED PILE REVEAL EXCEEDS DETAILS TABULATED BELOW.

HWL ZONE	A		B	C	D	E
	PILE REVEAL FOR STRUCTURAL DESIGN		MINIMUM GROUND CLEARANCE	MINIMUM FREEBOARD	MAX. ALLOWABLE FLOOD DEPTH/HWL	DISTANCE FROM TOP OF PILE TO CENTER OF TORQUE TUBE
1	MIN.	3'-9"	1'-6"	12"	6"	9"
	MAX.	5'-3"				
2	MIN.	4'-3"	2'-0"	12"	12"	9"
	MAX.	5'-8"				
3	MIN.	4'-9"	2'-6"	12"	18"	9"
	MAX.	6'-3"				

3 / C-605 STANDARD ARRAY PILE REVEAL
NOT TO SCALE

EVS, INC.
10025 Valley View Road, Suite 140
Eden Prairie, Minnesota 55344
Phone: 952-646-0236
www.evs-eng.com

CLIENT

McCARTHY

PROJECT
ARCHE SOLAR

LOCATION
22773 US HWY 20
FAYETTE, OH 43521

SUBMITTAL
90% SUBMITTAL

SCALE

#	DATE	DESCRIPTION

PROFESSIONAL CERTIFICATION

STATE OF OHIO
NOAH SCOTT WATERHOUSE
PE.80989
REGISTERED PROFESSIONAL ENGINEER

Noah Waterhouse, PE
DATE 08/19/2022

DRAWN BY **DG/CL/AB**
CHECKED BY **BJ/NW**
DATE **2022.08.19**
PROJECT # **2022-013**

SHEET NAME
EQUIPMENT DETAILS

SHEET NUMBER
C-605

This foregoing document was electronically filed with the Public Utilities

Commission of Ohio Docketing Information System on

9/15/2022 2:12:24 PM

in

Case No(s). 20-0979-EL-BGN

Summary: Notice of Compliance with Condition No. 8 - Engineering Drawings Part 2 electronically filed by Teresa Orahood on behalf of Dylan F. Borchers