Public Utilities Commission of Ohio

Memo

To: Docketing Division

From: Jill Henry, Rail Specialist, Rail Division

Cc: PUCO Legal Department

Date: 2/4/20

Re: PUCO Case No. 20-358-RR-FED- In the Matter of a Request for Upgrades to the Active Warning Devices at the Norfolk Southern Railway Crossing, Phillipi Road, DOT#513-251M, in Franklin County, Ohio.

On August 21, 2019, the Ohio Rail Development Commission (ORDC) authorized funding for Norfolk Southern Railway to upgrade the flashing lights and gates at Phillipi Road, DOT#513-251M, in Franklin County, Ohio. The crossing was surveyed, on April 29, 2019, and found to warrant the upgrade. The electric utility provider for this crossing is AEP-Ohio.

The project will be paid for with federal funds and is actual cost. The plans and estimates in the amount of $569,828.00 have been approved. Construction may commence at once. **Staff requests a Finding & Order with completion of the project in nine months.** Staff requests that the following language be incorporated in the Finding & Order:

It is expected that all work necessary for FHWA acceptance of the warning devices will be completed by the in-service due date and that the railroad will be responsible for this work. This work includes, but is not limited to:

- **Any ancillary work to make the warning devices function as designed and visible to the roadway user, and**
- **MUTCD compliance, including minor roadway work if necessary.**

Please serve the following parties of record:

Norfolk Southern Railway Company
Kurt Young
Public Projects Engineer
1200 Peachtree Street NE
Box 123
Atlanta, GA 30309-3597

Norfolk Southern Railway Company
Cayela Wimberly
Director Grade Crossing Safety
1200 Peachtree Street NE
Atlanta, GA 30309-3597

Eastman & Smith LTD.
Casey Talbott
Attorney for Norfolk Southern
One SeaGate 24th Floor
P.O. Box 10032
Toledo, OH 43699-0032

Ohio Rail Development Commission
Cathy Stout
Safety Manager
1980 West Broad Street
Mail Stop #3140
Columbus, OH 43223

Franklin County Engineer
Cornell Robertson
County Engineer
970 Dublin Road
Columbus, Ohio 43215

AEP-Ohio

OHIO RAIL DEVELOPMENT COMMISSION
INTER-OFFICE COMMUNICATION

TO: **Randall Schumacher, Chief, Motor Carrier & Rail Enforcement, PUCO**

FROM: **Cathy Stout, Manager, Safety Section, ORDC**

BY: **Greg Gronbach, Project Manager, Safety Section, ORDC**

SUBJECT: **Franklin Co, Phillipi Rd/CR26, DOT# 513251M, PID# 110493**

DATE: **December 13, 2019**

The Ohio Rail Development Commission (ORDC) established a diagnostic survey at the subject location on April 29, 2019. The Public Utilities Commission of Ohio (PUCO) attended the review. The Diagnostic Team recommended the modification/upgrade of warning devices - flashing lights and roadway gates. Copies of the diagnostic review form and the plan and estimate are attached.

PE has already been provided by the railroad. ORDC accepts the site plans and estimates as provided. Please issue a construction-only order for the project outlined above. ORDC recommends a nine (9) month construction timeline. This authorization is made with the stipulation and understanding that an approved estimate may contain entries for items or activities that may be cited and found to be ineligible for federal participation during the project audit.

It is expected that all work necessary for FHWA acceptance of the warning devices will be completed by the in-service due date and that the railroad will be responsible for this work. This work includes, but is not limited to:

- any ancillary work to make warning devices function as designed and visible to the roadway user, and
- MUTCD compliance – including minor roadway work if necessary.

Thank you for your assistance with these matters.

Greg Gronbach
Project Manager

Attachment: Diagnostic Review
Letter Agreement
PE Authorization
Plan, Estimate & Material List
Construction Authorization

c: Jill Henry, Rail Division Specialist, PUCO
ORDC Project Manager (file)

Ohio | Rail Development Commission

Mike DeWine, Governor
Jon Husted, Lt. Governor

Mark Policinski, Chair

December 13, 2019

Norfolk Southern Railway
Mr. Kurt Young
Administrator Highway Grade Crossing Improvements
1200 Peachtree Street
Atlanta, GA 30309-3597

RE: Franklin Co, Phillipi Rd/CR26, DOT# 513251M, PID# 110493

Dear Mr. Young:

The plan dated October 15, 2019 and estimate dated November 8, 2019, for the referenced project is acceptable. **Please note that the railroad must provide ORDC with a plan stamped by a professional engineer licensed in the State of Ohio prior to acceptance and close out of the project.** Norfolk Southern Railway may proceed with the construction of the proposed grade crossing warning system in accordance with the abbreviated plan. This authorization is made with the stipulation and understanding that the approved estimate may contain entries for items or activities that may be cited and found to be ineligible for federal participation during the project audit. Reimbursement of eligible actual cost is limited to $569,828.00. Additional costs must be approved in writing by the Ohio Rail Development Commission (ORDC) prior to being incurred. Emergency verbal authorizations by ORDC may be permitted and will be confirmed by ORDC in writing within ten (10) business days of the verbal approval.

This authorization is contingent upon Norfolk Southern Railway accepting the following instructions:

1. Norfolk Southern Railway's project foreman will furnish written notification five (5) working days prior to the date work will start at the project site to Greg Gronbach, ORDC, email Gregory.Gronbach@dot.ohio.gov , and to the Public Utilities Commission of Ohio at Jill.henry@puc.state.oh.us. Norfolk Southern Railway's project foreman will also notify the same of any stops and re-starts of the work activity and of the date work was completed for the project.

2. Norfolk Southern Railway will arrange for utilities to be located at the project site by the Ohio Utilities Protection Service (OUPS) prior to any construction activities at the site. Utilities that are not participating members of the service must be contacted directly by Norfolk Southern Railway.

3. Norfolk Southern Railway's project foremen will notify Greg Gronbach at 614-745-6760 (telephone) or Gregory.Gronbach@dot.ohio.gov (email) of any changes in the scope of

work, cost overruns, material changes, etc. which are not included in the approved plan and estimate and secure approval of same before the work is performed.

4. Open cut of roadways is *not permitted* except in unusual circumstances and must be coordinated with the local highway authority and preapproved by ORDC.

5. Norfolk Southern Railway will furnish two (2) copies of each partial bill to ORDC. Please find the enclosed ODOT Purchase Order to reference when billing.

6. Norfolk Southern Railway will furnish two (2) copies of the final all-inclusive bill to ORDC stating the exact dates of starting and completing work, the initial and final dates of construction and location where the accounts may be audited.

7. This installation will include any ancillary work to make the warning devices function as designed and meet MUTCD.

Thank you for your assistance with these matters.

Sincerely,

Greg Gronbach
Project Manager

C: Randall Schumacher, Chief, Motor Carrier & Rail Enforcement, PUCO
Jill Henry, Rail Division Specialist, PUCO
Susan Arduini, ORDC
ORDC (file)

08-Nov-19

Detailed Estimate for Grade Crossing Warning Devices

City/State: COLUMBUS, OH
Road: PHILLIPI RD.
MilePost: CJ-144.1
DOT/AAR: 513251M
State Proj. No.: PID#110493
County: FRANKLIN
S&E Proj. No.: 10.3250
File Number:
Man Days: 270

Purchases - Others		
Meals and Lodging:	$38,423.16	
Rental of Equipment:	$52,524.32	
(2 Trucks, 1 Backhoe w/ Trailer and 1 Pipe-Pusher for 45 Days)		
Construction Supervision Vehicle:	$8,034.46	
Purchases - Other Total:		$98,981.94
Material And Additives		
Material Cost:	$208,063.00	
Sales and Use Tax:	$16,645.00	
Material Handling Freight:	$20,806.28	
Material Total:		$245,514.28
Labor And Additives		
Labor Cost:	$90,450.00	
(6 man crew at $2,010.00 a day for: 45 days)		
Payroll Tax & Overheads:	$77,117.67	
Preliminary Engineering:	$31,343.84	
Construction Supervision:	$26,420.44	
Labor Total:		$225,331.95
	Project Cost:	$569,828.17
	Scrap / Salvage Credit:	$0.00
	Project Total:	**$569,828.00**

Estimated on: 08-Nov-19
Estimated by: q2suj

Estimate valid for 1 year from date of estimate

Norfolk Southern Railway

Highway Crossing Signalization Program - Material List

Do not substitute items without permission from S & E Engineering

City:	COLUMBUS
Road:	PHILLIPI RD.
Mile Post:	CJ-144.1
Drawing Number:	81131440
State ProjectNumber:	PID#110493
County:	FRANKLIN
A A R Number:	513251M
Project Number:	10.3250
File Number:	
New File Number:	CX0122938
WBS:	F-05965
Store Number:	
Supervisor:	A.D. BELL
Tax Code:	

Vendor to supply the following copies after pricing:

1 Set - Material Management with original Invoice
2 Sets - with plans shipped in car with material
1 Set - S&EGen. Supt. Construction w/copy of invoice

Location: COLUMBUS OH S&E Proj. No.: 10.3250 AFE No.: F-05965 Drawing No.: 81131440

Store No.: P.O.Number: Date Required: Date Shipped: Vendor: Railroad Signal Design

Qty.	Class-Item-CD	UI	Price per Item	Total Price	Item Description	Quantity Shipped	Quantity Installed Date Quan.	Date Quan.	Date Quan.	Quantity Returned (Credit)	Special Instructions
3	670-360693-4	EA	$6.05	$18.15	AAR/DOT NUMBER PLATE/DECAL, ORDER 3 PER PROJECT. 60 DAY LEAD TIME. SUPPLIED BY S'TRAN.						
1	165-006505-4	EA	$1,410.25	$1,410.25	AC SERVICE, COMPLETE LESS METER BASE, ASSEMBLED ON 30' POLE						
37	670-001196-4	EA	$47.30	$1,750.10	ARRESTER, LIGHTNING SOLID STATE ERICO P/N EPD2050F						
20	105-002620-4	EA	$248.79	$4,975.80	BATTERY, NICAD 340AH, MODEL SPL340						
1	670-503047-4	EA	$214.50	$214.50	BELL, CROSSING ELECTRONIC GENERL SIGNAL, EB-3-360-5 CR 02-044350						
2	001-000011-4	EA	$5,000.00	$10,000.00	BERM WALL, 4' HIGH X 5' WIDE, 35LF						
2	670-980689-4	EA	$74.80	$149.60	BRACKET HIGH WIND, (RIGID 3'), WIG- 191036, WALRUS TUSK TYPE						
2	670-561375-4	EA	$1,197.90	$2,395.80	BRACKET, GATE SAVER, NEG385102GS, SPRING LOADED SWING AWAY ADAPTER FOR FIBERGLASS/ALUMINUM GATES, USE WITH GATE 38' AND LESS						
600	465-939422-4	LF	$3.01	$1,806.00	CABLE, UG 12 CONDUCTOR NO 14 AWG SOLID EACH CONDUCTOR WITH 5/64 IN INSULATION 10 MIL						
600	465-292862-4	LF	$1.36	$816.00	CABLE, UG 2-6 TWISTED, S-23 OKONITE 113-12-3933 SOLID TINNED CONDUCTOR						
500	465-292929-4	LF	$4.12	$2,060.00	CABLE, UG 5 COND. NO. 6 AWG SOLID COPPER CABLE TO MEET NS CORP. SPEC. FOR SIGNAL						
350	465-791835-4	FT	$3.84	$1,344.00	CABLE, UG AC ENTRANCE 3C#6-7X OKONITE FMPF-L 094-078 TR W/G 1 X 8 7X W010 BRZ TAPE 600V PRODUCT CODE 206-11-6070						
1	670-073679-4	EA	$5,687.40	$5,687.40	CANTILEVER, WT/F ARM 26' W/WALKWAY KIT SAFTRAN #071294-26NS2						
1	670-078365-4	EA	$5,683.82	$5,683.82	CANTILEVER, WT/F ARM 28' W/WALKWAY KIT SAFTRAN #071294-28NS2						
1	670-010671-4	EA	$731.50	$731.50	CHARGER, BATTERY CRAGG MODEL 40 DTC-12V, 40 AMP, P/N 520940						
1	670-010672-4	EA	$951.50	$951.50	CHARGER, BATTERY CRAGG MODEL 60 DTC-12V, 60 AMP, P/N 520960						

APPROVED BY STATE	APPROVED BY RAILROAD	CAR NUMBER	SEAL NUMBER

Location: COLUMBUS OH S&E Proj. No.: 10.3250 AFE No.: F-05965 Drawing No.: 81131440

Store No.: P.O.Number: Date Required: Date Shipped: Vendor: Railroad Signal Design

Qty.	Class-Item-CD	UI	Price per Item	Total Price	Item Description	Quantity Shipped	Quantity Installed Date Quan.	Date Quan.	Date Quan.	Quantity Returned (Credit)	Special Instructions
4	670-664917-4	EA	$71.49	$285.96	CONNECTOR KIT, WELDED FAR RAIL, CONSISTING OF RUBBER HOSE PROPERLY DRILLED, BONDSTRAND, 1 SPLICING SLEEVE, 1 REDUCING SLEEVE, 3 CLAMPS, 1 TRACK CLIP, 1 WEB WELDED TRACK CONNECTOR, 1 WELD METAL, SAFETRAN 111359-2X						
4	670-632520-4	EA	$57.38	$229.52	CONNECTOR KIT, WELDED NEAR RAIL, CONSISTING OF, RUBBER HOSE PROPERLY DRILLED, BONDSTRAND, SPLICING SLEEVE, 1 REDUCING SLEEVE, 5 CLAMPS, 1 TRACK CLIP, 1 WEB WELDED TRACK CONNECTOR, 1 WELD METAL, SAFETRAN 111359-1X						
2	670-315874-4	EA	$1,375.33	$2,750.66	COUNTERWEIGHT, KIT 25'- 32' STAINLESS FOR S-MECH ON GATE/CANT COMBOS W/ARMS AND HUBS SAFETRAN 070755-2532AX						
1	670-009086-4	EA	$505.88	$505.88	COUPLER, PSO TUNED RECEIVER SAFETRAN NO. 7A355A-790HZ						
11	670-760012-4	EA	$41.80	$459.80	COVER, FOR 1 WAY FLASHING LIGHT ASSY. 18 OZ. BLACK VINYL COATED NYLON. ====TO COVER 2 LAMPS====						
1	670-986650-4	EA	$355.00	$355.00	DISPOSAL, CONSTRUCTION DEBRIS AND CLEANING X'ING EQUIPMENT CONTAINER						
4	670-228165-4	EA	$13.71	$54.84	EQUALIZER, SAFETRAN 022700-1X LESS BASE, MODERN NO. 700-1 SHUNT ARRESTER TRACK CIRCUITS CR 02-197950						
1	670-000004-4	EA	$700.00	$700.00	FCC LICENSE FOR MONITOR/RADIO						
12	670-000003-4	EA	$255.85	$3,070.20	FILL/STONE #57, QUANITY IS BASED ON TRUCK LOAD PLUS DELIVERY COST						
2	670-744631-4	EA	$3,270.80	$6,541.60	FOUNDATION, CFLS FOR SAFETRAN MODEL "WT/F" ARMS 12' TO 30' SINGLE MAST, DIXIE# DP4B-SM12-26-4, 5'10" CR 02-205902						
2	670-015231-4	EA	$613.80	$1,227.60	FOUNDATION, DIXIE,S-2 GATE 2'6"X2'6"X5'6" ASSEMBLED						
1	670-005375-4	EA	$548.23	$548.23	GATE ARM, ALUMI-LITE (HIGH WIND), 34-40 FT, ARM ASSEMBLY, INCLUDES GATE GUARD FOR GATE LIGHT CABLE. HIGH INTENSITY VERTICAL STRIPES.						
1	670-005378-4	EA	$408.65	$408.65	GATE ARM, ALUMINUM, 25-31 FT, ARM ASSEMBLY, INCLUDES GATE GUARD FOR GATE LIGHT CABLE. HIGH INTENSITY VERTICAL STRIPES.						

APPROVED BY STATE	APPROVED BY RAILROAD	CAR NUMBER	SEAL NUMBER

Location: COLUMBUS OH S&E Proj. No.: 10.3250 AFE No.: F-05965 Drawing No.: 81131440

Store No.: P.O.Number: Date Required: Date Shipped: Vendor: Railroad Signal Design

Qty.	Class-Item-CD	UI	Price per Item	Total Price	Item Description	Quantity Shipped	Quantity Installed Date Quan.	Date Quan.	Date Quan.	Quantity Returned (Credit)	Special Instructions
1	670-338352-4	EA	$49,835.67	$49,835.67	GCP4000 FOR 6X6 XING 2 TRK (2TRK CHASSIS), REDUNDANT, WIRED RACK FOR 6X6 FARADAY, 2 EA SSCCIIII, 2 EA 20 AMP CRAIG CHARGER, NO SEAR, 2 RELAY RACKS, SAFETRAN T19013						
2	670-281710-4	EA	$15.90	$31.80	GUARD FOR GATE LIGHT CABLE P\N NEG 510-CG						
1	670-018333-4	KT	$1,107.52	$1,107.52	KIT, FOREMAN CROSSING SIGNAL (INCLUDES 10-757356, 10-841068, 2-899801, 2-904890, 50-917900, 32-840003, 1-003360, 1-809007, 2-754202, 55-938285, 2-204244, 2-656656 , 50-917869, 1-005458, 2-810339, 1-447991, 2-805560, 1-330382, 1-986008, 100 WHITE TAGS AND						
2	670-092155-4	EA	$176.00	$352.00	LAMP ASSY, LED GATE ARM KIT (INCLUDES 3 LAMPS COMPLETE WITH CABLES AND MTG. HARDWARE) REC #: 9298-1120						
2	670-005054-4	EA	$986.35	$1,972.70	LAMP ASSY, LED, 12" MAST 1 WAY FRONT LIGHTS (IPN: 042003-L489XNS)						
7	670-005057-4	EA	$1,008.69	$7,060.83	LAMP ASSY, LED, 4" CANT JURY ARM MAST (FRONT OR BACK) (IPN: 042003-L001534)						
2	670-005066-4	EA	$1,019.80	$2,039.60	LAMP ASSY, LED, 5" MAST 1 WAY BACK LIGHTS (IPN: 042003-L001493)						
10	670-440826-4	EA	$1.18	$11.80	LINK, SAFETRAN 024620-1X INSL TESTING COMP 1 IN CENTER SIGNAL CIRCUITS CR 02-286662						
1	670-339854-4	EA	$573.38	$573.38	MAST, (WT/F) , SIDELIGHT BRACKET FOR WT/F CANTILEVER, SAFETRAN 041442-1031X,						
2	670-201210-4	EA	$8,710.07	$17,420.14	MAST, 12" CANTILEVER, FOR 21'-30' WT/F ARMS, INCL. LADDER KIT (IPN: 071271-30NS)						
2	670-135958-4	EA	$1,751.31	$3,502.62	MAST, 5" ALUMINUM 22' WITH DOUBLE JCT. BOX BASE. SAFETRAN 070519-X598						
2	670-521147-4	EA	$3,850.87	$7,701.74	MECHANISM, GATE MODEL S-40, WITH CONTACT HEATER, COMPLETE W/RELAY S'TRAN # 074000-W00090						
10	670-000001-4	EA	$726.23	$7,262.30	MISC. EXPENSE, MATERAIL/FILL						
1	000-000000-4	EA	$7,000.00	$7,000.00	MISC. EXPENSE, UNDERGROUND BORING						
1	000-000011-4	EA	$1,200.00	$1,200.00	OHIO PE AND ATTORNEY CHARGES						

APPROVED BY STATE	APPROVED BY RAILROAD	CAR NUMBER	SEAL NUMBER

Location: COLUMBUS OH S&E Proj. No.: 10.3250 AFE No.: F-05965 Drawing No.: 81131440

Store No.: P.O.Number: Date Required: Date Shipped: Vendor: Railroad Signal Design

Qty.	Class-Item-CD	UI	Price per Item	Total Price	Item Description	Quantity Shipped	Quantity Installed Date Quan.	Date Quan.	Date Quan.	Quantity Returned (Credit)	Special Instructions
2	670-001355-4	EA	$81.25	$162.50	PACKAGE, HARDWARE SIGN 12 IN. (USE WITHWT/F MAST) MOUNTING, SERRMI A1250-8, HARMON @180004/0007,						
2	670-207365-4	EA	$105.58	$211.16	PACKAGE, HARDWARE SUPPORT FOR MOUNTING CROSSING SIGN ON WT/F CANTILEVER ARM 21'-40', SAFETRAN P/N 071279 -X11						
1	670-018542-4	EA	$47.30	$47.30	PADLOCK, ABLOY 5/16" X 1" SHACKLE CLEARANCE KEYED FOR C&S DEPT USE; INCLUDES ETCHING;						
1	255-646807-4	EA	$32.92	$32.92	PADLOCK, SAFETRAN PART NO. 030399-29X SCREW TYPE FOR CIR CONTROLLER AND BTY. BOX						
1	670-514605-4	EA	$13.56	$13.56	PINNACLE, W-C SECT 1-11, 4"& 5" REF K1 110-8 OR SAFETRAN NO. @035045-503X						
4	670-259211-4	EA	$62.85	$251.40	PLUG BOARD KIT, TYPE B-1 & VOLTAGE TEST TERMINAL, SAFETRAN 420000-75X						
2	670-782807-4	EA	$2,379.77	$4,759.54	PSO+, RECEIVER ASSY, PSO+ RX CODE "A", FREQUENCY SELECTABLE, SAFETRAN 7A483-0001						
2	670-782071-4	EA	$1,852.62	$3,705.24	PSO+, TRANSMITTER ASSY, PSO+ TX CODE "A", FREQUENCY SELECTABLE, SAFETRAN 7A481-0001						
4	465-002899-4	EA	$46.37	$185.48	REEL, CABLE DISPOSABLE FOR CROSSING SIGNAL PACKAGES						
1	670-019620-4	EA	$27,903.68	$27,903.68	SHELTER, WIRED UNI 6X6 ALUMN PTMW 91000778, 10,000 BUT AC AND 1000W HEATER, WITH HEAVY DUTY HASP AND 36 IN TERMINAL BOARD						
4	670-586967-4	EA	$29.68	$118.72	SHUNT COVER W/LAG SCREWS, 19"X19", SERRMI #40271, ORDER 1 PER SHUNT						
4	670-016314-4	EA	$796.99	$3,187.96	SHUNT, MULTI-FREQ. #250849-003 FSS-1D ALSTOM NARROW BAND (86, 114, 156, 172, 211)						
2	670-016346-4	EA	$154.53	$309.06	SIGN, X-BUCK, HI-INTENSIVE REFLECTIVE FRT. & BACK FOR ALL STATES, SAFETRAN# 035200-91X						
5	670-397239-4	EA	$33.66	$168.30	SIGN, CROSSING ENS MALFUNCTION ASSEMBLY FOR 12" MAST, SAFETRAN #T17216						
44	670-018188-4	EA	$42.35	$1,863.40	TERMINAL BLOCK, THRU POST WITH HARDWARE LESS LIGHTNING ARRESTER. SIEMENS P/N NYK: 023275-17X.						
1	670-006511-4	EA	$492.10	$492.10	Z-DNO-COUPLER, PSO II TUNED RECEIVER SAFETRAN NO. 7A355A-1450HZ						

APPROVED BY STATE	APPROVED BY RAILROAD	CAR NUMBER	SEAL NUMBER

Location: COLUMBUS OH S&E Proj. No.: 10.3250 AFE No.: F-05965 Drawing No.: 81131440

Store No.: P.O.Number: Date Required: Date Shipped: Vendor: Railroad Signal Design

Qty.	Class-Item-CD	UI	Price per Item	Total Price	Item Description	Quantity Shipped	Quantity Installed Date Quan.	Date Quan.	Date Quan.	Quantity Returned (Credit)	Special Instructions
1	670-767220-4	EA	$317.16	$317.16	Z-DNO-MAST, (WT/F) JURY ADJUSTABLE LANE LIGHT BRACKET FOR WT/F CANTILEVER, SAFTRAN P/N 071227-X10						
1	670-742096-4	EA	$45.91	$45.91	Z-DNO-RELAY INTERFACE PROBE, ULTRATECH PN 16031-00						
2	670-353390-4	EA	$41.45	$82.90	Z-DNO-SIGN, "2 TRACKS" LESS HARDWARE SAFETRAN 035207-2X						

Total Material: $208,062.75

APPROVED BY STATE	APPROVED BY RAILROAD	CAR NUMBER	SEAL NUMBER

SH. NO.	CONTENTS	REV. NO.
NX1	INDEX SHEET	1
1	LAYOUT	1
2	PROFILE	1
3	CABLE PLAN	1
4	LOAD CENTER	1
5	CHARGERS & BATTERIES	1
6	GCP4000 CHASSIS & MODULE LAYOUT	1
7	GCP4000 PROGRAMMING	1
8	GCP4000 PROGRAMMING	1
9	CONNECTORS FOR TRACK MODULES	1
10	CPU MODULE & SEAR III HOOK-UPS	1
11	SEAR III PROGRAMMING	1
12	BACKHAUL EQUIPMENT	1
13	SSCC#1 MODULE HOOK-UP	1
14	SSCC#2 MODULE HOOK-UP	1
15	PSO+ RECEIVER AND TRANSMITTER (TRACK 1)	1
16	PSO+ RECEIVER AND TRANSMITTER (TRACK 2)	1
17	CANTILEVER FLASHER LIGHTS	1
18	SIGNAL "A" S-40 GATE & FLASHER CIRCUITS	1
19	SIGNAL "B" S-40 GATE & FLASHER CIRCUITS	1
20	BACKBOARD 1A & 1B	1
21	REAR BACKBOARD 1A & 1B	1
22	SIDE A LAYOUT & RACK PLACEMENT	1
23	SIDE C LAYOUT	1
24	SIDE B LAYOUT & TOP VIEW	1

REVISIONS

1	10-15-19	TAH	RSD	BES

PLAN REVISED ACCOUNT
OF CROSSING UPGRADE
AT PHILLIPI RD.
PROJ. #10.3250

FILE: CX0122938

IN SERVICE: - -

PER:

DESIGNED BY: TAH 10-15-19	NORFOLK SOUTHERN
DRAWN BY: RSD 10-15-19	OFFICE OF ASS'T. VICE PRESIDENT COMM. & SIGNAL, ATLANTA, GA. — M.P.: CJ-144.10
CHECKED BY: BES 10-15-19	COLUMBUS, OH CFLGS AT PHILLIPI RD.
IN SERVICE: - -	DAYTON — REV. 1
PROPERTY: PENNSYLVANIA R.R.	CADD or DWG. No. 81131440.NX1 — SHEET No. INDEX 1

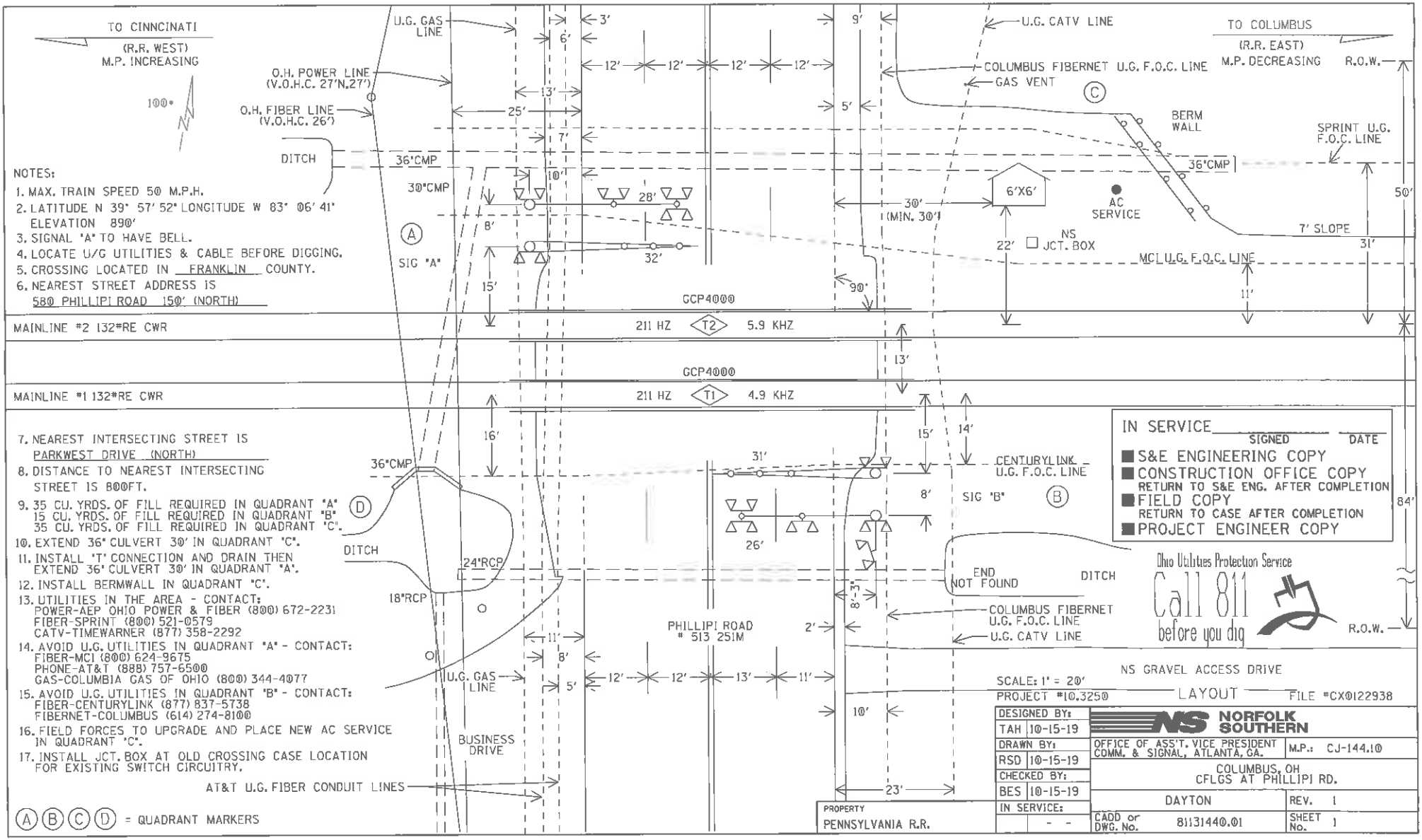

NOTES:

1. MAX. TRAIN SPEED 50 M.P.H.
2. LATITUDE N 39° 57' 52" LONGITUDE W 83° 06' 41" ELEVATION 890'
3. SIGNAL "A" TO HAVE BELL.
4. LOCATE U/G UTILITIES & CABLE BEFORE DIGGING.
5. CROSSING LOCATED IN FRANKLIN COUNTY.
6. NEAREST STREET ADDRESS IS 580 PHILLIPI ROAD 150' (NORTH)
7. NEAREST INTERSECTING STREET IS PARKWEST DRIVE (NORTH)
8. DISTANCE TO NEAREST INTERSECTING STREET IS 800FT.
9. 35 CU. YRDS. OF FILL REQUIRED IN QUADRANT "A"
   15 CU. YRDS. OF FILL REQUIRED IN QUADRANT "B"
   35 CU. YRDS. OF FILL REQUIRED IN QUADRANT "C".
10. EXTEND 36" CULVERT 30' IN QUADRANT "C".
11. INSTALL "T" CONNECTION AND DRAIN THEN EXTEND 36" CULVERT 30' IN QUADRANT "A".
12. INSTALL BERMWALL IN QUADRANT "C".
13. UTILITIES IN THE AREA - CONTACT:
    POWER-AEP OHIO POWER & FIBER (800) 672-2231
    FIBER-SPRINT (800) 521-0579
    CATV-TIMEWARNER (877) 358-2292
14. AVOID U.G. UTILITIES IN QUADRANT "A" - CONTACT:
    FIBER-MCI (800) 624-9675
    PHONE-AT&T (888) 757-6500
    GAS-COLUMBIA GAS OF OHIO (800) 344-4077
15. AVOID U.G. UTILITIES IN QUADRANT "B" - CONTACT:
    FIBER-CENTURYLINK (877) 837-5738
    FIBERNET-COLUMBUS (614) 274-8100
16. FIELD FORCES TO UPGRADE AND PLACE NEW AC SERVICE IN QUADRANT "C".
17. INSTALL JCT. BOX AT OLD CROSSING CASE LOCATION FOR EXISTING SWITCH CIRCUITRY.

Ⓐ Ⓑ Ⓒ Ⓓ = QUADRANT MARKERS

IN SERVICE _____ SIGNED _____ DATE

- ■ S&E ENGINEERING COPY
- ■ CONSTRUCTION OFFICE COPY
  RETURN TO S&E ENG. AFTER COMPLETION
- ■ FIELD COPY
  RETURN TO CASE AFTER COMPLETION
- ■ PROJECT ENGINEER COPY

SCALE: 1" = 20'
PROJECT #10.3250
LAYOUT
FILE #CX0122938

DESIGNED BY: TAH 10-15-19	NORFOLK SOUTHERN
DRAWN BY: RSD 10-15-19	OFFICE OF ASS'T. VICE PRESIDENT COMM. & SIGNAL, ATLANTA, GA. — M.P.: CJ-144.10
CHECKED BY: BES 10-15-19	COLUMBUS, OH CFLGS AT PHILLIPI RD.
IN SERVICE: - -	DAYTON — REV. 1
PROPERTY: PENNSYLVANIA R.R.	CADD or DWG. No. 81131440.01 — SHEET No. 1

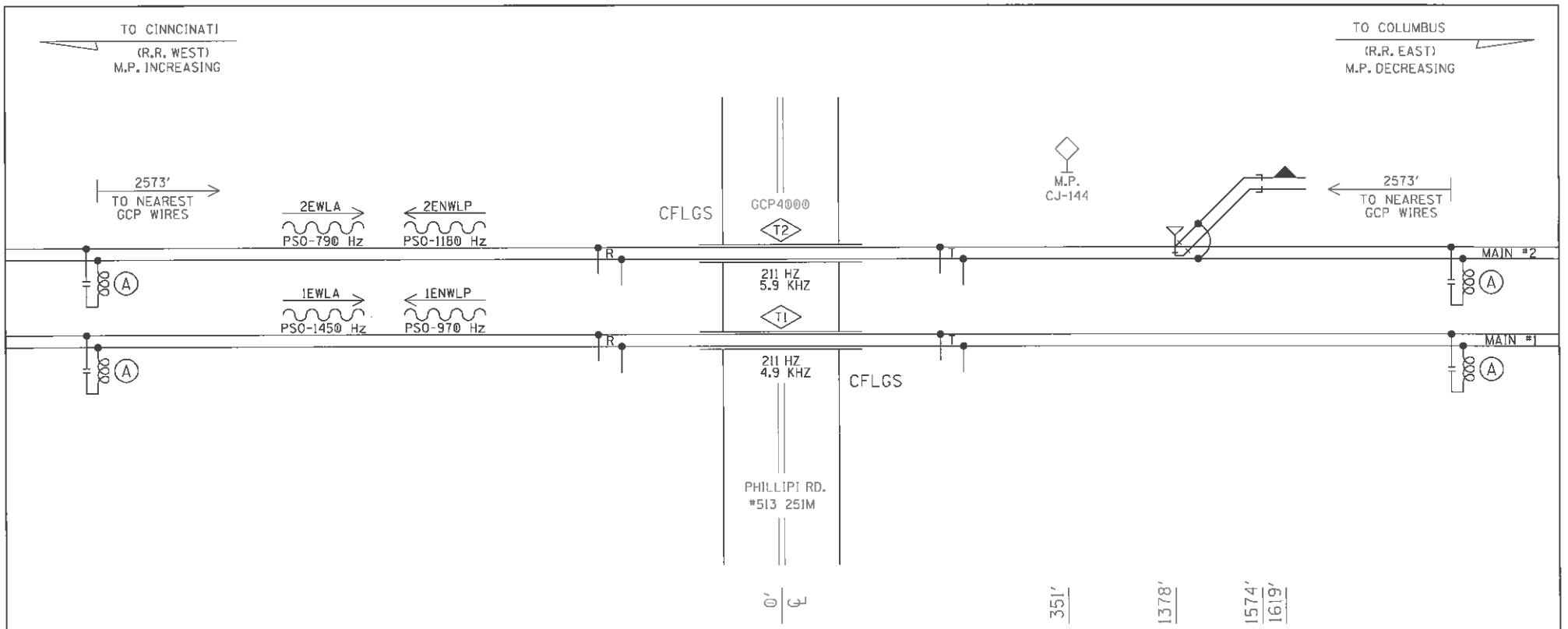

Ⓐ- MF-NBS FSS-ID 250849-003 (211HZ)

PROFILE

DESIGNED BY: TAH 10-15-19	NORFOLK SOUTHERN		
DRAWN BY: RSD 10-15-19	OFFICE OF ASS'T. VICE PRESIDENT COMM. & SIGNAL, ATLANTA, GA.	M.P.:	CJ-144.10
CHECKED BY: BES 10-15-19	COLUMBUS, OH CFLGS AT PHILLIPI RD.		
IN SERVICE: - -	DAYTON	REV.	1
PROPERTY: PENNSYLVANIA R.R.	CADD or DWG. No. 81131440.02	SHEET No.	2

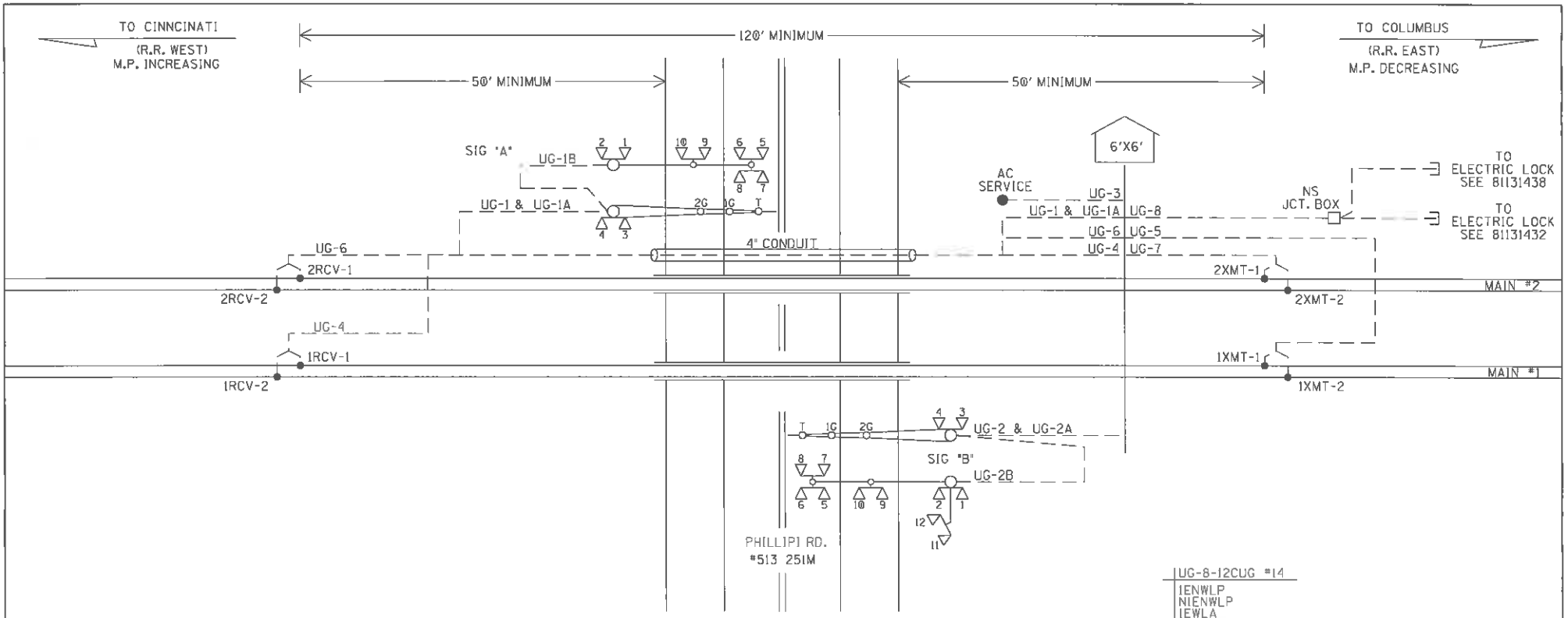

UG-1-5CUG #6
AEC
AEZ
AEB
B16-A
N16-A

UG-2-5CUG #6
BEC
BEZ
BEB
B16-B
N16-B

UG-1A-12CUG #14
AXG
NAXG
AXX
1AXX
AGD
XGP1
AGBX120
AGNX120
SPARE
SPARE
SPARE
SPARE

UG-2A-12CUG #14
BXG
NBXG
BXX
1BXX
BGD
XGP1
XGP
BGBX120
BGNX120
SPARE
SPARE
SPARE

UG-1B-5CUG #6
AEC
AEZ
AEB
BELL
NBELL

UG-2B-5CUG #6
BEC
BEZ
BEB
SPARE
SPARE

UG-3-3CUG #6 W/#8 GND
BX120-A
BX120-B
NX120
GND

UG-4-TW. PR. #6
1RCV-1
1RCV-2

UG-5-TW. PR. #6
1XMT-1
1XMT-2

UG-6-TW. PR. #6
2RCV-1
2RCV-2

UG-7-TW. PR. #6
2XMT-1
2XMT-2

UG-8-12CUG #14
1ENWLP
N1ENWLP
1EWLA
N1EWLA
2ENWLP
N2ENWLP
2EWLA
N2EWLA
SPARE
SPARE
SPARE
SPARE

CABLE PLAN

DESIGNED BY: TAH 10-15-19	NORFOLK SOUTHERN		
DRAWN BY: RSD 10-15-19	OFFICE OF ASS'T. VICE PRESIDENT COMM. & SIGNAL, ATLANTA, GA.	M.P.:	CJ-144.10
CHECKED BY: BES 10-15-19	COLUMBUS, OH CFLGS AT PHILLIPI RD.		
	DAYTON	REV.	1
PROPERTY: PENNSYLVANIA R.R.	IN SERVICE: - -	CADD or DWG. No.	81131440.03
		SHEET No.	3

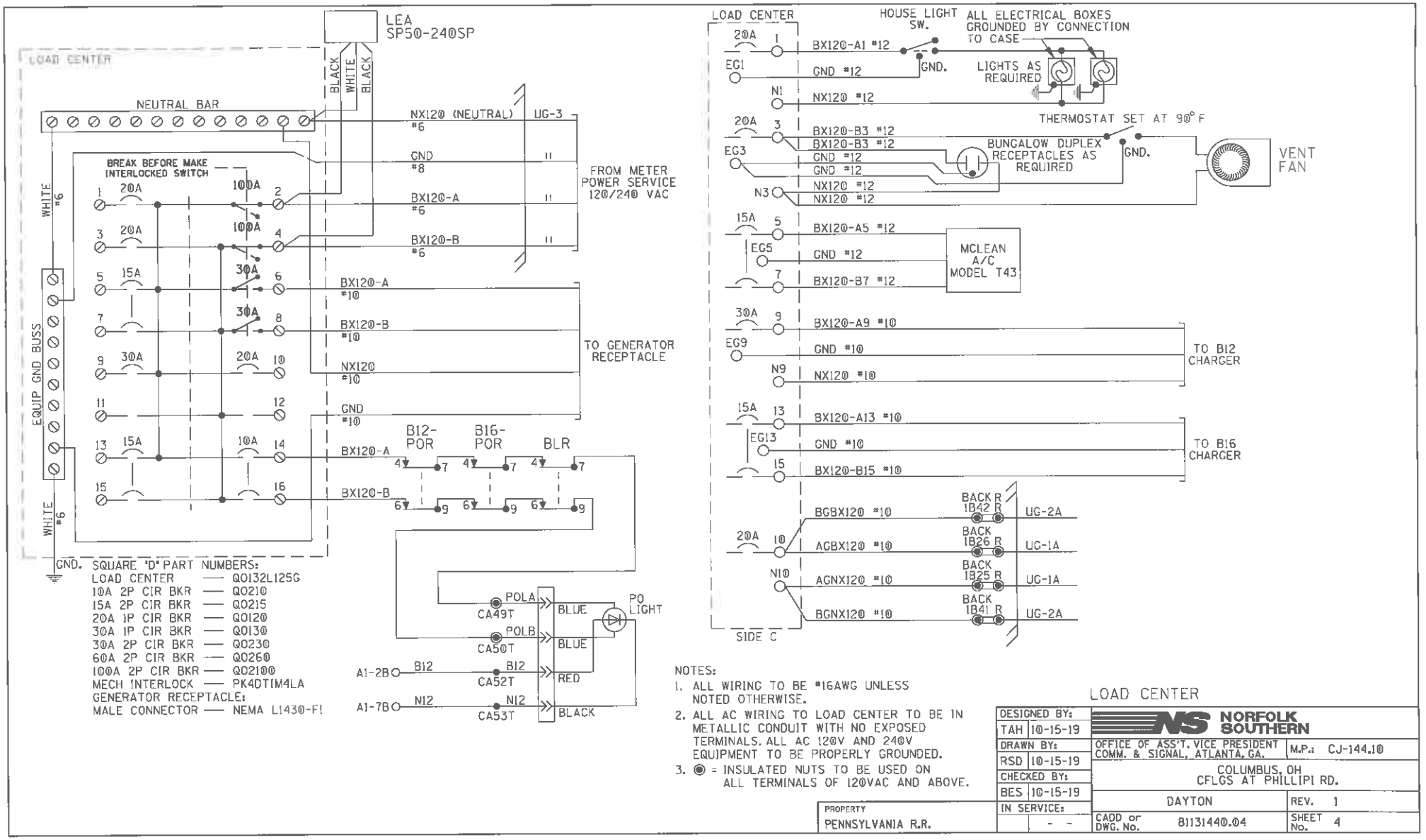

NOTES:

1. ALL WIRING TO BE #16AWG UNLESS NOTED OTHERWISE.
2. ALL AC WIRING TO LOAD CENTER TO BE IN METALLIC CONDUIT WITH NO EXPOSED TERMINALS. ALL AC 120V AND 240V EQUIPMENT TO BE PROPERLY GROUNDED.
3. ◉ = INSULATED NUTS TO BE USED ON ALL TERMINALS OF 120VAC AND ABOVE.

LOAD CENTER

DESIGNED BY: TAH 10-15-19	NORFOLK SOUTHERN	
DRAWN BY: RSD 10-15-19	OFFICE OF ASS'T. VICE PRESIDENT COMM. & SIGNAL, ATLANTA, GA.	M.P.: CJ-144.10
CHECKED BY: BES 10-15-19	COLUMBUS, OH CFLGS AT PHILLIPI RD.	
PROPERTY: PENNSYLVANIA R.R.	DAYTON	REV. 1
IN SERVICE: - -	CADD or DWG. No. 8113144@.04	SHEET No. 4

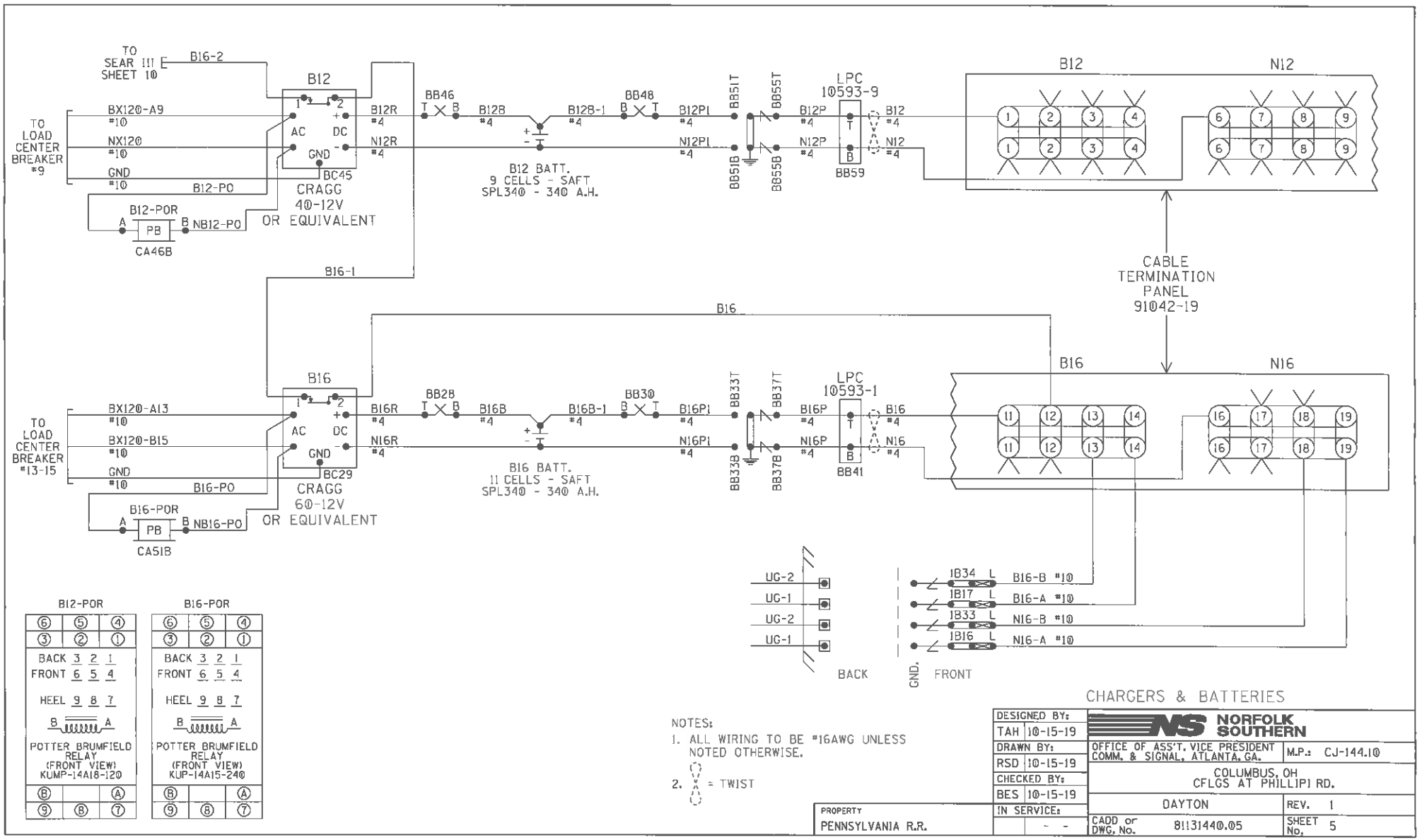

NOTES:
1. ALL WIRING TO BE #16AWG UNLESS NOTED OTHERWISE.
2. V = TWIST

CHARGERS & BATTERIES

DESIGNED BY: TAH 10-15-19	NORFOLK SOUTHERN
DRAWN BY: RSD 10-15-19	OFFICE OF ASS'T. VICE PRESIDENT COMM. & SIGNAL, ATLANTA, GA. — M.P.: CJ-144.10
CHECKED BY: BES 10-15-19	COLUMBUS, OH CFLGS AT PHILLIPI RD.
IN SERVICE: - -	DAYTON — REV. 1
PROPERTY: PENNSYLVANIA R.R.	CADD or DWG. No. 81131440.05 — SHEET No. 5

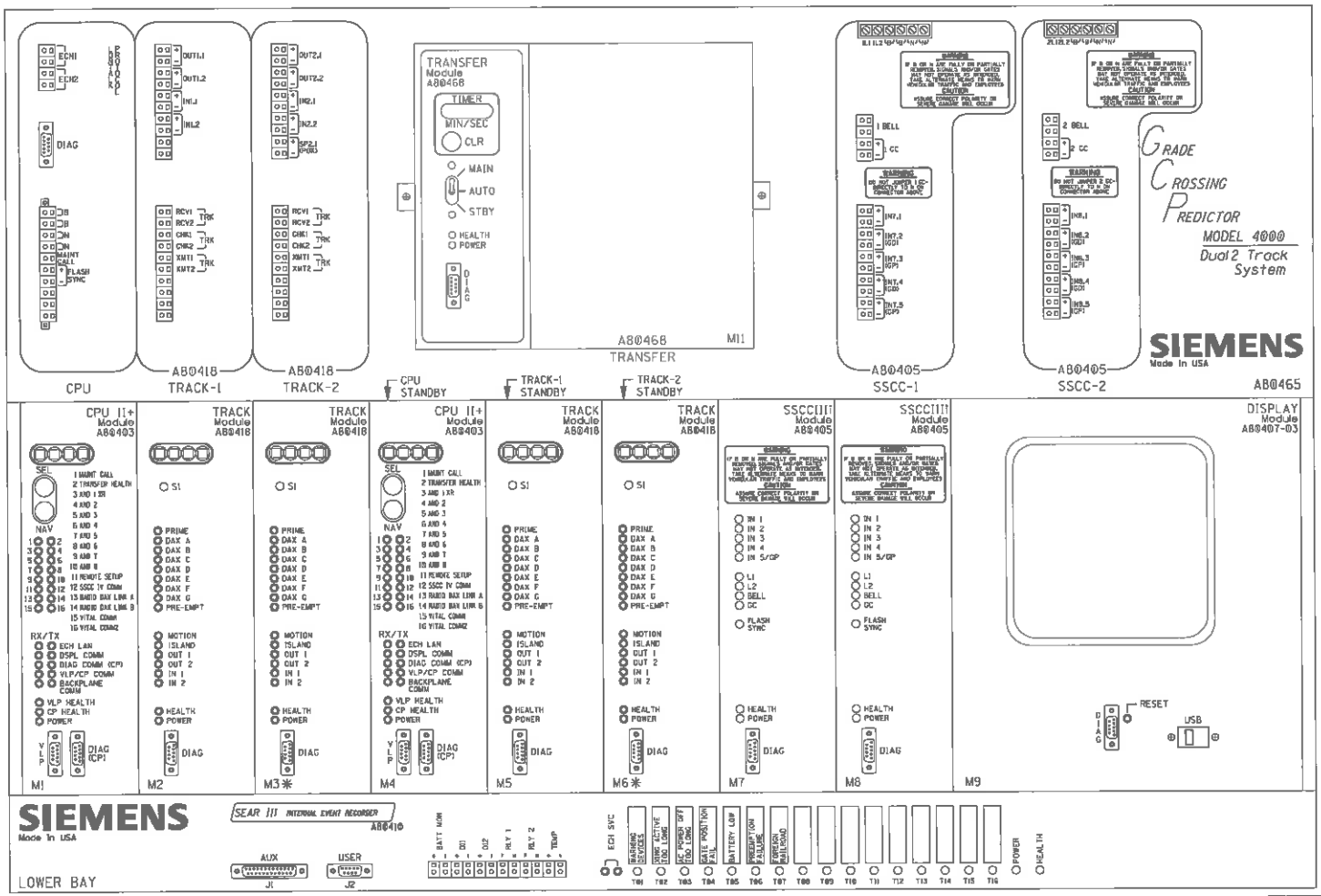

WARNING

REMOVAL OF THE SSCC!!!! MODULE
WILL CAUSE THE GATE(S) TO
DROP WITHOUT GATE DELAY AND
FLASHING LIGHTS WILL NOT ACTIVATE.

CAUTION

ENSURE CORRECT POLARITY OF B AND N FOR
SSCC!!!! MODULE OR SEVERE DAMAGE WILL OCCUR.

REFER TO DETAILED INSTRUCTIONS ON THE
SSCC!!!! BEFORE APPLYING POWER TO
THE POWER CONNECTOR(S).

ATTENTION!

ENSURE THE DISPLAY MODULE HEATER IS
DISABLED. LEAVING THE DISPLAY HEATER ENABLED
WILL REDUCE THE AMOUNT OF BATTERY STANDBY
TIME IN THE EVENT OF AN AC POWER FAILURE.

HEATER FUNCTION IS JUMPER SELECTABLE ON
THE DISPLAY MODULE BOARD.
THREE OPTIONS ARE AVAILABLE:
NORMAL LCD HTR (DEFAULT)
HI CURRENT
OFF (NO JUMPER)

* = MAIN AND STANDBY MAY USE RIO IN
TRACK 2 SLOTS (M3 AND M6)

GCP4000 CHASSIS & MODULE LAYOUT

DESIGNED BY: TAH 10-15-19	NORFOLK SOUTHERN		
DRAWN BY: RSD 10-15-19	OFFICE OF ASS'T. VICE PRESIDENT COMM. & SIGNAL, ATLANTA, GA.	M.P.:	CJ-144.10
CHECKED BY: BES 10-15-19	COLUMBUS, OH CFLGS AT PHILLIPI RD.		
IN SERVICE: - -	DAYTON	REV.	1
PROPERTY PENNSYLVANIA R.R.	CADD or DWG. No. 81131440.06	SHEET No.	6

Program Report

Location and SIN

DOT Number: 513251M
Milepost Number: CJ-144.10
Site Name: PHILLIPI RD

SIN: 755023814816

MCF and Template Selection

MCF Name: GCP-T6X-02-1.mcf
MCF Revision: 021
MCFCRC: 6076E435

Template = 1A:6 Trk BI

Check Numbers

Office Check No. (DT 4.6.0): 043445E3
Office Check Number: 043445E3
Config. Check Number: 083B3EB8
(Based on MCF Revision 021)

Program

BASIC: module configuration
Track 1 Slot = Track
Track 2/RIO 1 Slot = Track
Track 3 Slot = Not Used
Track 4 Slot = Not Used
Track 5/RIO 2 Slot = Not Used
Track 6/RIO 3 Slot = Not Used
SSCC-1 Slot = SSCC3i
SSCC-2 Slot = SSCC3i
SEAR Used = Yes

BASIC: MS/GCP operation
Track 1 : MS/GCP Operation = Yes
Track 2 : MS/GCP Operation = Yes

BASIC: Island operation
Track 1 : Island Used = Internal
Track 2 : Island Used = Internal

BASIC: preemption
Preempt Logic = No

BASIC: radio Dax links
Radio DAX link A Used = No
Radio DAX link B Used = No

BASIC: VitalComms links
VitalComms link 1 Used = No
VitalComms link 2 Used = No

PREDICTORS: track 1
Track 1 : Prime Used = Yes
Track 1 : Dax A Used = No
Track 1 : Dax B Used = No
Track 1 : Dax C Used = No
Track 1 : Dax D Used = No
Track 1 : Dax E Used = No
Track 1 : Dax F Used = No
Track 1 : Dax G Used = No

PREDICTORS: track 2
Track 2 : Prime Used = Yes
Track 2 : Dax A Used = No
Track 2 : Dax B Used = No
Track 2 : Dax C Used = No
Track 2 : Dax D Used = No
Track 2 : Dax E Used = No
Track 2 : Dax F Used = No
Track 2 : Dax G Used = No

GCP: track 1
Track 1 : GCP Freq Category = Standard
Track 1 : GCP Frequency = 211 Hz
Track 1 : Approach Distance = 2573 ft
Track 1 : Uni/Bi/Sim-Bidirnl = Bidirnl
Track 1 : GCP Transmit Level = Medium
Track 1 : Island Connection = Isl1
Track 1 : Island Distance = 165 ft
Track 1 : Computed Distance = 9999 ft
Track 1 : Linearization Steps = 100

GCP: track 1 enhanced det
Track 1 : Inbound PS Sensitivity = Off
Track 1 : Speed Limiting Used = Yes
Track 1 : Outbound False Act Lvl = Normal
Track 1 : Outbound PS Timer = 20 sec
Track 1 : Trailing Switch Logic = On
Track 1 : Post Joint Detn Time = 15 sec
Track 1 : Adv Appr Predn = No
Track 1 : CancelPickup Delay = This Isl

GCP: track 1 prime
Track 1 : Prime Warning Time = 30 sec
Track 1 : Prime Offset Distance = 0 ft
Track 1 : Switch MS EZ Level = 10
Track 1 : Prime MS/GCP Mode = Pred
Track 1 : Prime Pickup Delay = 15 sec
Track 1 : Prime UAX = Not Used

GCP: track 1 pos start
Track 1 : Positive Start = Off
Track 1 : Sudden Shnt Det Used = No
Track 1 : Low EZ Detection Used = No

GCP: track 1 MS Control
Track 1 : MS/GCP CtrlIP Used = No
Track 1 : MS Sensitivity Level = 0
Track 1 : Compensation Level = 1300
Track 1 : Warn Time-Ballast Comp = High
Track 1 : Low EX Adjustment = 39
Track 1 : Bidirn Dax Passthru = No
Track 1 : False Act on Train Stop = No
Track 1 : EX Limiting Used = Yes
Track 1 : EZ Correction Used = Yes

GCP: track 2
Track 2 : GCP Freq Category = Standard
Track 2 : GCP Frequency = 211 Hz
Track 2 : Approach Distance = 2573 ft
Track 2 : Uni/Bi/Sim-Bidirnl = Bidirnl
Track 2 : GCP Transmit Level = Medium
Track 2 : Island Connection = Isl2
Track 2 : Island Distance = 165 ft
Track 2 : Computed Distance = 9999 ft
Track 2 : Linearization Steps = 100

GCP: track 2 enhanced det
Track 2 : Inbound PS Sensitivity = Off
Track 2 : Speed Limiting Used = Yes
Track 2 : Outbound False Act Lvl = Normal
Track 2 : Outbound PS Timer = 20 sec
Track 2 : Trailing Switch Logic = On
Track 2 : Post Joint Detn Time = 15 sec
Track 2 : Adv Appr Predn = No
Track 2 : CancelPickup Delay = This Isl

GCP: track 2 prime
Track 2 : Prime Warning Time = 30 sec
Track 2 : Prime Offset Distance = 0 ft
Track 2 : Switch MS EZ Level = 10
Track 2 : Prime MS/GCP Mode = Pred
Track 2 : Prime Pickup Delay = 15 sec
Track 2 : Prime UAX = Not Used

GCP: track 2 pos start
Track 2 : Positive Start = Off
Track 2 : Sudden Shnt Det Used = No
Track 2 : Low EZ Detection Used = No

GCP: track 2 MS Control
Track 2 : MS/GCP CtrlIP Used = No
Track 2 : MS Sensitivity Level = 0
Track 2 : Compensation Level = 1300
Track 2 : Warn Time-Ballast Comp = High
Track 2 : Low EX Adjustment = 39
Track 2 : Bidirn Dax Passthru = No
Track 2 : False Act on Train Stop = No
Track 2 : EX Limiting Used = Yes
Track 2 : EZ Correction Used = Yes

ISLAND: track 1
Track 1 : IslFrequency = 4.9 kHz
Track 1 : Pickup Delay (2s +) = 0 sec
Track 1 : IslEnable IP Used = No

ISLAND: track 2
Track 2 : IslFrequency = 5.9 kHz
Track 2 : Pickup Delay (2s +) = 0 sec
Track 2 : IslEnable IP Used = No

AND: track Anding
AND 1 XR Used = Yes
AND 2 Used = No
AND 3 Used = No
AND 4 Used = No
AND 5 Used = No
AND 6 Used = No
AND 7 Used = No
AND 8 Used = No

AND: AND 1 XR
AND 1 XR Track 1 = Prime
AND 1 XR Track 2 = Prime
AND 1 Enable Used = Yes
And 1 Enable Pickup = 5 sec
AND 1 Enable Drop = 0 sec
AND 1 Wrap Used = No

ADVANCED: MS restart
MS/GCP Restart Used = No

GCP4000 PROGRAMMING

DESIGNED BY: TAH 10-15-19	NORFOLK SOUTHERN		
DRAWN BY: RSD 10-15-19	OFFICE OF ASS'T. VICE PRESIDENT COMM. & SIGNAL, ATLANTA, GA.	M.P.: CJ-144.10	
CHECKED BY: BES 10-15-19	COLUMBUS, OH CFLGS AT PHILLIPI RD.		
	DAYTON	REV. 1	
PROPERTY: PENNSYLVANIA R.R.	IN SERVICE: - -	CADD or DWG. No. BI131448.DT	SHEET No. 7

ADVANCED: out of service
OOS Control = Display+OOS IPs
OOS Timeout = Yes
OOS Timeout = 1 hrs

ADVANCED: out of service 2
T1 OOS Control = OOS Input 1
T2 OOS Control = OOS Input 1

ADVANCED: track wrap circuits
Wrap LOS Timer = 5 sec
Track 1 Wrap Used = No
Track 2 Wrap Used = No

ADVANCED: trk 1 overrides
Track 1 : All Predictors Override Used = No

ADVANCED: trk 2 overrides
Track 2 : All Predictors Override Used = No

ADVANCED: OR logic
OR 1 Used = No
OR 2 Used = No
OR 3 Used = No
OR 4 Used = No

ADVANCED: internal I/O 1
Pass Thrus = No
Int.1 Sets = Not Used
Int.1 Set by = Not Used
Int.2 Sets = Not Used
Int.2 Set by = Not Used
Int.3 Sets = Not Used
Int.3 Set by = Not Used
Int.4 Sets = Not Used
Int.4 Set by = Not Used

ADVANCED: internal I/O 2
Int.5 Sets = Not Used
Int.5 Set by = Not Used
Int.6 Sets = Not Used
Int.6 Set by = Not Used
Int.7 Sets = Not Used
Int.7 Set by = Not Used
Int.8 Sets = Not Used
Int.8 Set by = Not Used

ADVANCED: internal I/O 3
Int.9 Sets = Not Used
Int.9 Set by = Not Used
Int.10 Sets = Not Used
Int.10 Set by = Not Used
Int.11 Sets = Not Used
Int.11 Set by = Not Used
Int.12 Sets = Not Used
Int.12 Set by = Not Used

ADVANCED: internal I/O 4
Int.13 Sets = Not Used
Int.13 Set by = Not Used
Int.14 Sets = Not Used
Int.14 Set by = Not Used
Int.15 Sets = Not Used
Int.15 Set by = Not Used
Int.16 Sets = Not Used
Int.16 Set by = Not Used

ADVANCED: site options
Daylight Savings = Off
Units = Standard
Maint Call Rpt IP Used = No
Emergency Activate IP = No
EZ/EX Logging = Change
EZ/EX Point Change = 3

SSCC
Gates Used = Yes
SSCC1+2 GPs Coupled = Yes
Min Activation = 0 sec
Rmt Activation Cancel = 2 min
Bell On Gate Rising = No
Mute Bell On Gate Down = No
SSCC IV Controller Used = No

SSCC: 1
SSCC-1 Activation = AND 1 XR
SSCC-1 Gate Delay = 6 sec
SSCC-1 Number of GPs = 1
SSCC-1 Number of GDs = 2
SSCC 1 : Flash Rate = 40
SSCC 1 : Low Battery Detection = No
SSCC 1 : Flash Sync = master
SSCC 1 : Invert Gate Output = No
SSCC 1 : Lamp Neutral Test = Off
Aux-1 Xng Ctrl Used = No

SSCC: 2
SSCC-2 Activation = AND 1 XR
SSCC-2 Gate Delay = 6 sec
SSCC-2 Number of GPs = 0
SSCC-2 Number of GDs = 0
SSCC 2 : Flash Rate = 40
SSCC 2 : Low Battery Detection = No
SSCC 2 : Flash Sync = slave
SSCC 2 : Invert Gate Output = No
SSCC 2 : Lamp Neutral Test = Off
Aux-2 Xng Ctrl Used = No

OUTPUT: assignment page 1
OUT 1.1 = Not Used
OUT 1.2 = Not Used
OUT 2.1 = Not Used
OUT 2.2 = Not Used

INPUT: assignment page 1
IN 1.1 = Not Used
IN 1.2 = Not Used
IN 2.1 = Not Used
IN 2.2 = Not Used

IO: assignment SSCC
OUT GC 1 = Gate Output 1
OUT GC 2 = Gate Output 2
IN 7.1 = Not Used
IN 7.2 = GD 1.2
IN 7.3 = AND 1 XR Enable
IN 7.4 = GD 1.1
IN 7.5 = GP 1.1
IN 8.1 = Out Of Service IP 1
IN 8.2 = Not Used
IN 8.3 = Not Used
IN 8.4 = Not Used
IN 8.5 = Not Used

SEAR
SEAR Subnode = 3
DI 1 = Not Used
DI 2 = Not Used
Rly 1 = General
Rly 2 = Not Used

SEAR: inputs
SP 2.1 = POK 1
SP 3.1 = Not Used
SP 4.1 = Not Used
SP 5.1 = Not Used
SP 6.1 = Not Used

SEAR: slot 1-4 inputs
IN 1.1 = Not Used
IN 1.2 = Not Used
IN 2.1 = Not Used
IN 2.2 = Not Used
IN 3.1 = Not Used
IN 3.2 = Not Used
IN 4.1 = Not Used
IN 4.2 = Not Used

SEAR: inputs slot 5
IN 5.1 = Not Used
IN 5.2 = Not Used

SEAR: inputs slot 6
IN 6.1 = Not Used
IN 6.2 = Not Used

SEAR: slot 7-8 inputs
IN 7.1 = Not Used
IN 8.2 = Not Used
IN 8.3 = Not Used
IN 8.4 = Not Used
IN 8.5 = Not Used

SITE: programming
Radio Subnode = 1
Field Password = Off
Low Battery Enabled = Off

Configuration Package File

Filename: 81131440.pac

GCP4000 PROGRAMMING

DESIGNED BY: TAH 10-15-19	NORFOLK SOUTHERN		
DRAWN BY: RSD 10-15-19	OFFICE OF ASST. VICE PRESIDENT COMM. & SIGNAL, ATLANTA, GA.	M.P.#: CJ-144.18	
CHECKED BY: BES 10-15-19	COLUMBUS, OH CFLGS AT PHILLIPI RD.		
	DAYTON	REV. 1	
PROPERTY: PENNSYLVANIA R.R.	IN SERVICE: - -	CADD DWG. No. 81131446.08	SHEET No. 8

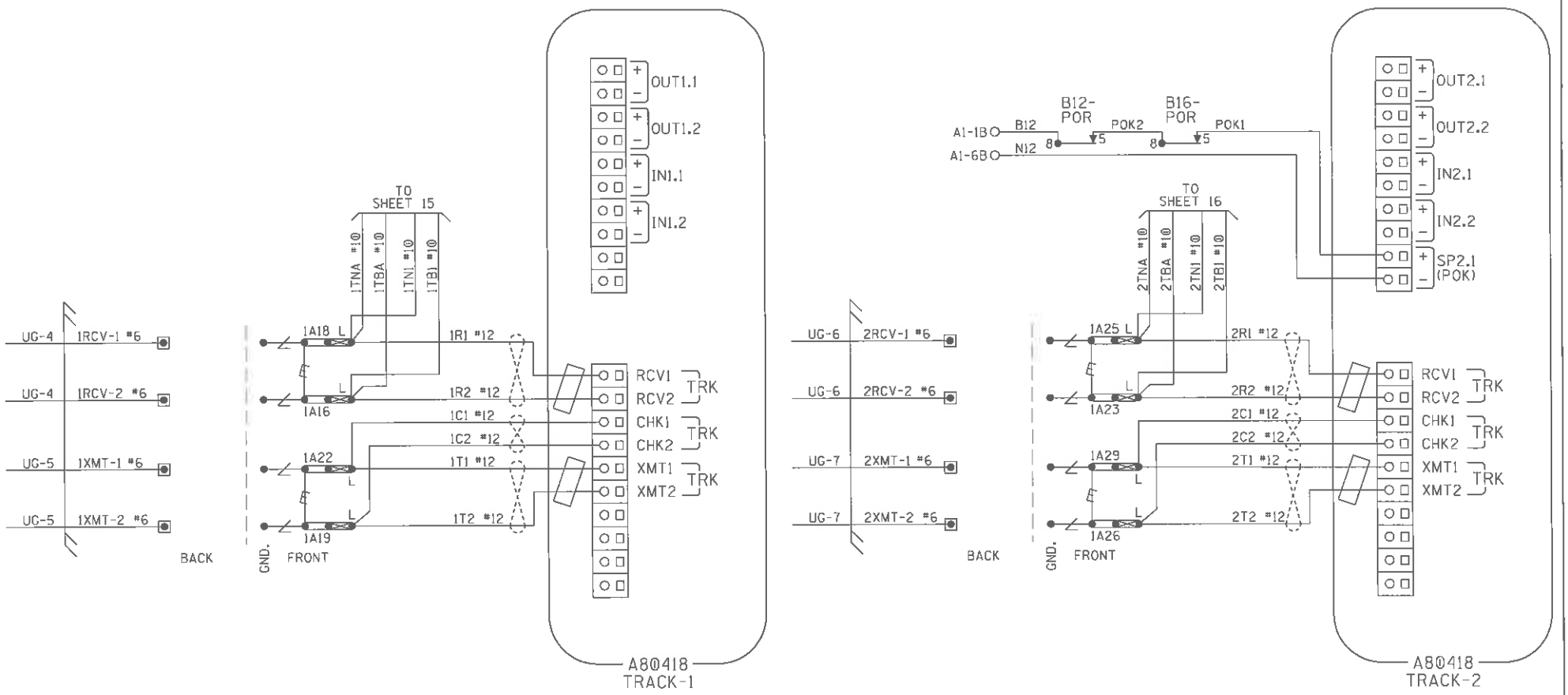

NOTES:
1. ALL WIRING TO BE #16AWG UNLESS NOTED OTHERWISE.
2. = TWIST
3. = FERRITE BEAD

CONNECTORS FOR TRACK MODULES

DESIGNED BY: TAH 10-15-19	NORFOLK SOUTHERN		
DRAWN BY: RSD 10-15-19	OFFICE OF ASS'T. VICE PRESIDENT COMM. & SIGNAL, ATLANTA, GA.	M.P.:	CJ-144.10
CHECKED BY: BES 10-15-19	COLUMBUS, OH CFLGS AT PHILLIPI RD.		
PROPERTY PENNSYLVANIA R.R.	IN SERVICE: - -	DAYTON	REV. 1
	CADD or DWG. No. B1131440.09		SHEET No. 9

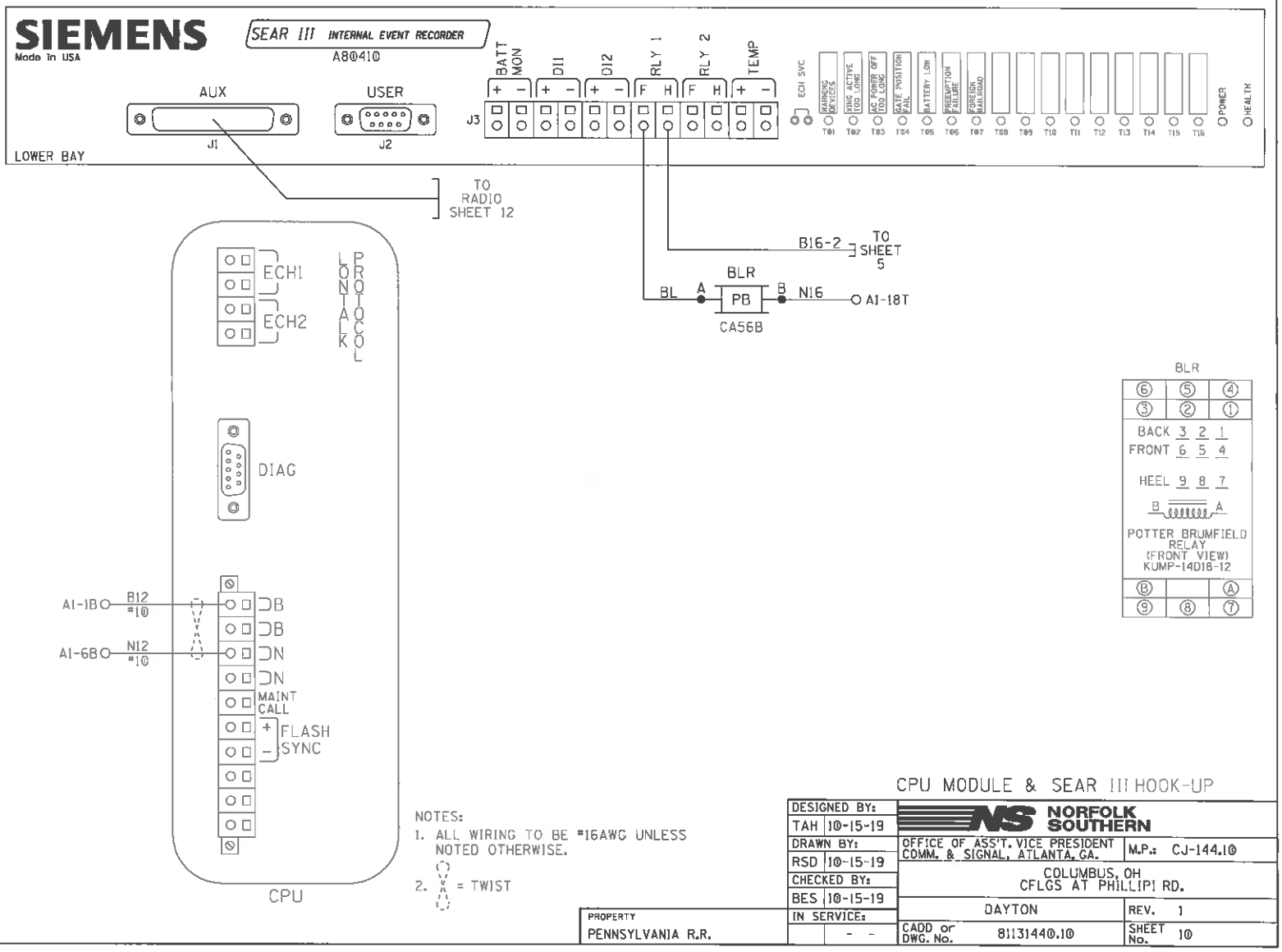

NOTES:
1. ALL WIRING TO BE #16AWG UNLESS NOTED OTHERWISE.
2. = TWIST

CPU MODULE & SEAR III HOOK-UP

DESIGNED BY: TAH 10-15-19	NORFOLK SOUTHERN
DRAWN BY: RSD 10-15-19	OFFICE OF ASS'T. VICE PRESIDENT COMM. & SIGNAL, ATLANTA, GA. — M.P.: CJ-144.10
CHECKED BY: BES 10-15-19	COLUMBUS, OH CFLGS AT PHILLIPI RD.
IN SERVICE: - -	DAYTON — REV. 1
PROPERTY: PENNSYLVANIA R.R.	CADD or DWG. No. 81131440.10 — SHEET No. 10

	SITE SET UP PROCEDURE	
	FUNCTION	LED DISPLAY
	SITE NAME	PHILLIPI RD.
	MILEPOST	CJ-144.10
	DOT NUMBER	513-251M
	TESTER TYPE	CROSSING
	AUTO DST ADJUST	NO
	TIMEZONE	OTHER
	GMT OFFSET	-00:00
	DATE FORMAT	MM-DD-YYYY
	TEMP. FORMAT	FAHRENHEIT
	INDICATE HOLDOFF (SEC)	0
	INDICATE REFRESH (SEC)	60
	GEO CTL REFRESH (SEC)	0
	SITE ADDRESS (ATCS)	7.550.238.148.03.01
	SITE TYPE	NO COMMUNICATION
#	OFFICE ADDRESS (ATCS)	2.550.00.0000
#	PRIMARY HOP ADDR	7.RRR.LLL.GGG.XX.XX
#	BACKUP HOP ADDR 1	7.RRR.LLL.GGG.XX.XX
#	BACKUP HOP ADDR 2	7.RRR.LLL.GGG.XX.XX
#	POLL ID	1
#	MODE	GEN/ATCS
#	WAMS XID	DISABLED
#	OFFICE COMM DEVICE	MCM (ECHELON)
#	RADIO ATCS ADDR	7.RRR.LLL.GGG.01.01
#	PHONE *	(OFFICE NUMBER)
#	INIT STRING	
#	FIELD COMM DEVICE	NONE
★	USER PORT BAUD	57600
★	USER PORT DATA BITS	8
★	USER PORT PARITY	NONE
★	USER PORT STOP BITS	1
★	USER PORT FLOW CONTROL	NONE
★	AUX PORT BAUD	9600
★	AUX PORT DATA BITS	8
★	AUX PORT PARITY	NONE
★	AUX PORT STOP BITS	1
★	AUX PORT FLOW CONTROL	NONE

	CONTROL SYSTEM CONFIGURATION MENU QUESTIONS	
	THE QUESTION	SELECT FROM MENU OPTION
	RESET NAMES AND MODULES?	YES
	RAILROAD NUMBER?	550
	CROSSING CONFIGURATION?	NORMAL
	AND1 USED AS XR?	YES
	AND2 USED AS XR?	NO
	AND3 USED AS XR?	NO
	AND4 USED AS XR?	NO
	AND5 USED AS XR?	NO
	AND6 USED AS XR?	NO
	AND7 USED AS XR?	NO
	AND8 USED AS XR?	NO
*	XR CONTROLLED BY FOREIGN RR?	(AND1, AND2, AND3, AND4 AND5, AND6, AND7, AND8)
	ENTRANCE GATES?	2
	85% VOLTAGE RELAY OUT?	YES
	BATTERY BANKS?	2
	BATT MON USED?	YES
	PREEMPTION?	NO
	INTERNAL CROSSING CONTROLLERS?	2
	EXTERNAL CROSSING CONTROLLERS?	0
	VHF COMMUNICATOR?	NO
	DTMF ACTIVATION?	NO
	ILOD MODULES?	0
	USE CELL MODEM NON-CRITICAL FEATURE?	NO

PROGRAM MENU QUESTIONS	PROGRAM
EDIT DIGITAL INPUTS	NO
EDIT BATTERIES	NO
EDIT RELAYS	NO
EDIT INDICATOR LEDS	NO
EDIT TEST LEDS	NO
GCP4K ATCS SUBNODE	16

TO CONFIGURE SEARIII PRESS SITE SETUP KEY.
USE ARROW KEYS TO MAKE SELECTION.
PRESS ENTER AFTER SELECTION HAS BEEN MADE.

NOTES:
1. # = NOT DISPLAYED IF SITE TYPE = NO COMMUNICATION
2. ★ = USE DEFAULT SETTINGS
3. * = ONLY DISPLAYED IF CROSSING CONFIGURATION = SPLIT GATE

SEAR III PROGRAMMING

DESIGNED BY: TAH 10-15-19	NORFOLK SOUTHERN		
DRAWN BY: RSD 10-15-19	OFFICE OF ASS'T. VICE PRESIDENT COMM. & SIGNAL, ATLANTA, GA.	M.P.: CJ-144.10	
CHECKED BY: BES 10-15-19	COLUMBUS, OH CFLGS AT PHILLIPI RD.		
IN SERVICE: - -	DAYTON	REV. 1	
PROPERTY PENNSYLVANIA R.R.	CADD or DWG. No. 81131440.11	SHEET No. 11	

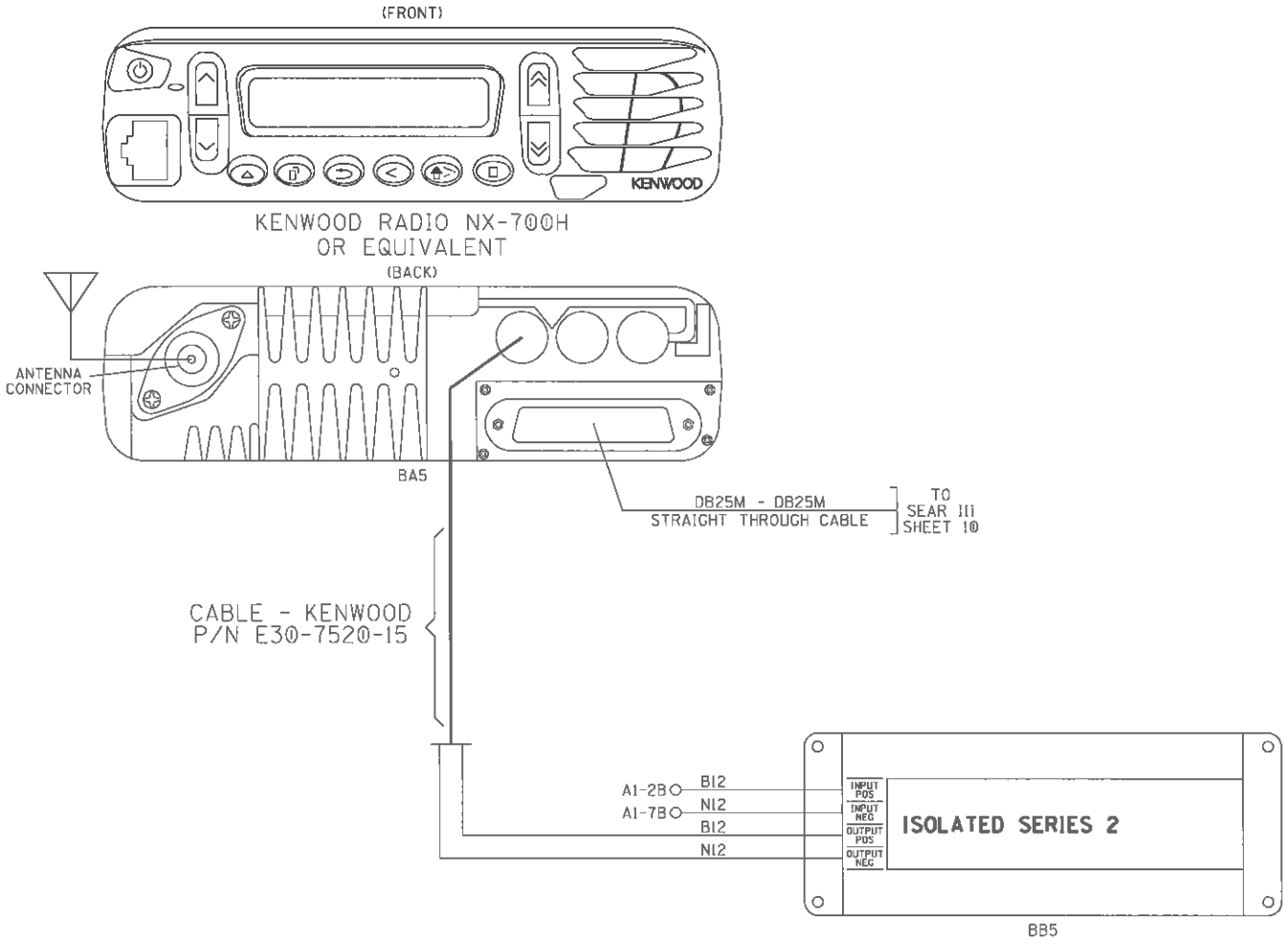

NOTE:
1. ALL WIRING TO BE #10AWG UNLESS NOTED OTHERWISE.

BACKHAUL EQUIPMENT

DESIGNED BY: TAH 10-15-19	NORFOLK SOUTHERN
DRAWN BY: RSD 10-15-19	OFFICE OF ASS'T. VICE PRESIDENT COMM. & SIGNAL, ATLANTA, GA. — M.P.: CJ-144.10
CHECKED BY: BES 10-15-19	COLUMBUS, OH CFLGS AT PHILLIPI RD.
IN SERVICE: - -	DAYTON — REV. 1
PROPERTY PENNSYLVANIA R.R.	CADD Dr DWG. No. 81131440.12 — SHEET No. 12

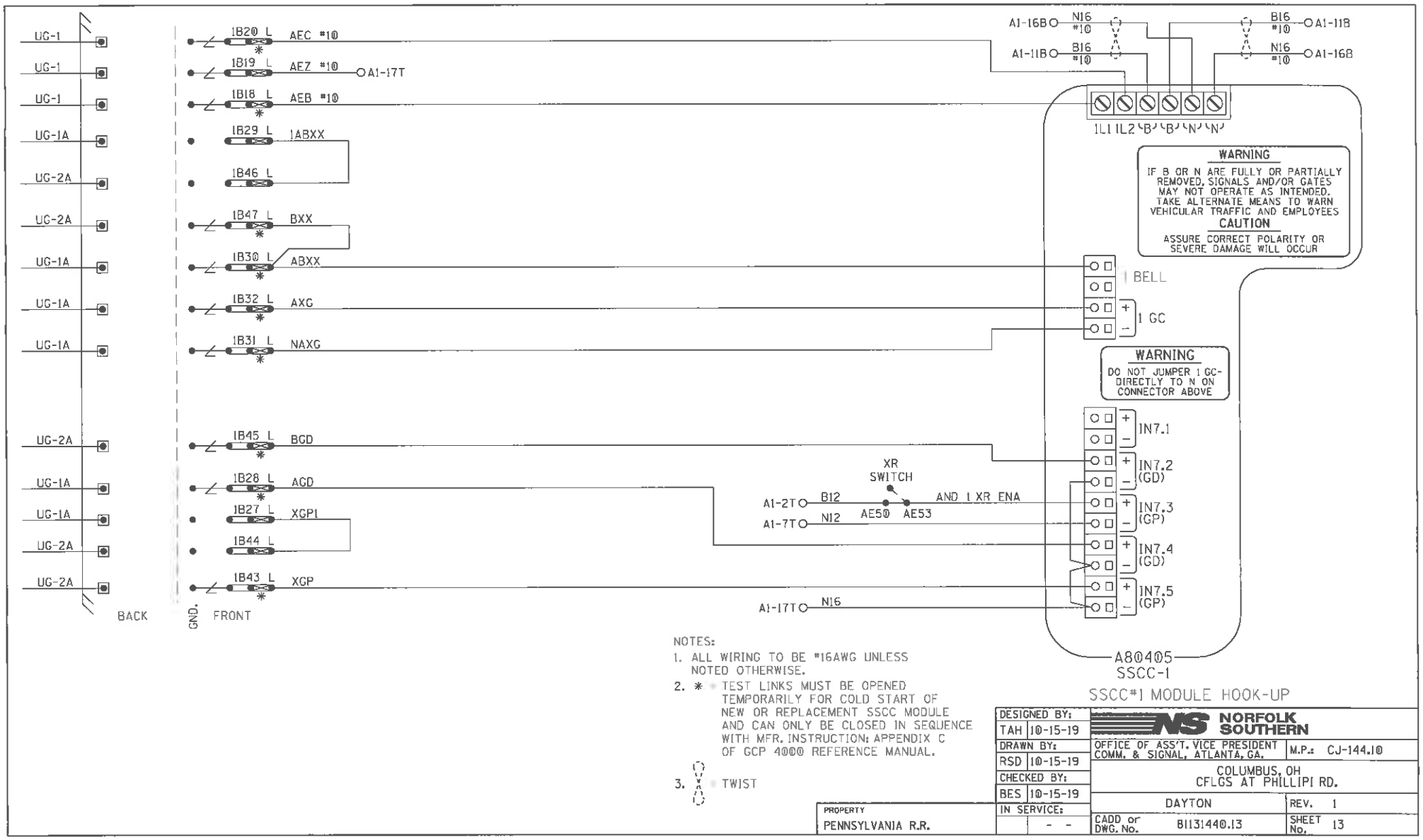

SSCC*1 MODULE HOOK-UP

NOTES:

1. ALL WIRING TO BE #16AWG UNLESS NOTED OTHERWISE.
2. * = TEST LINKS MUST BE OPENED TEMPORARILY FOR COLD START OF NEW OR REPLACEMENT SSCC MODULE AND CAN ONLY BE CLOSED IN SEQUENCE WITH MFR. INSTRUCTION; APPENDIX C OF GCP 4000 REFERENCE MANUAL.
3. ( ) = TWIST

DESIGNED BY: TAH 10-15-19	NORFOLK SOUTHERN
DRAWN BY: RSD 10-15-19	OFFICE OF ASS'T. VICE PRESIDENT COMM. & SIGNAL, ATLANTA, GA. — M.P.: CJ-144.10
CHECKED BY: BES 10-15-19	COLUMBUS, OH CFLGS AT PHILLIPI RD.
IN SERVICE: - -	DAYTON — REV. 1
PROPERTY: PENNSYLVANIA R.R.	CADD or DWG. No. B1131440.13 — SHEET No. 13

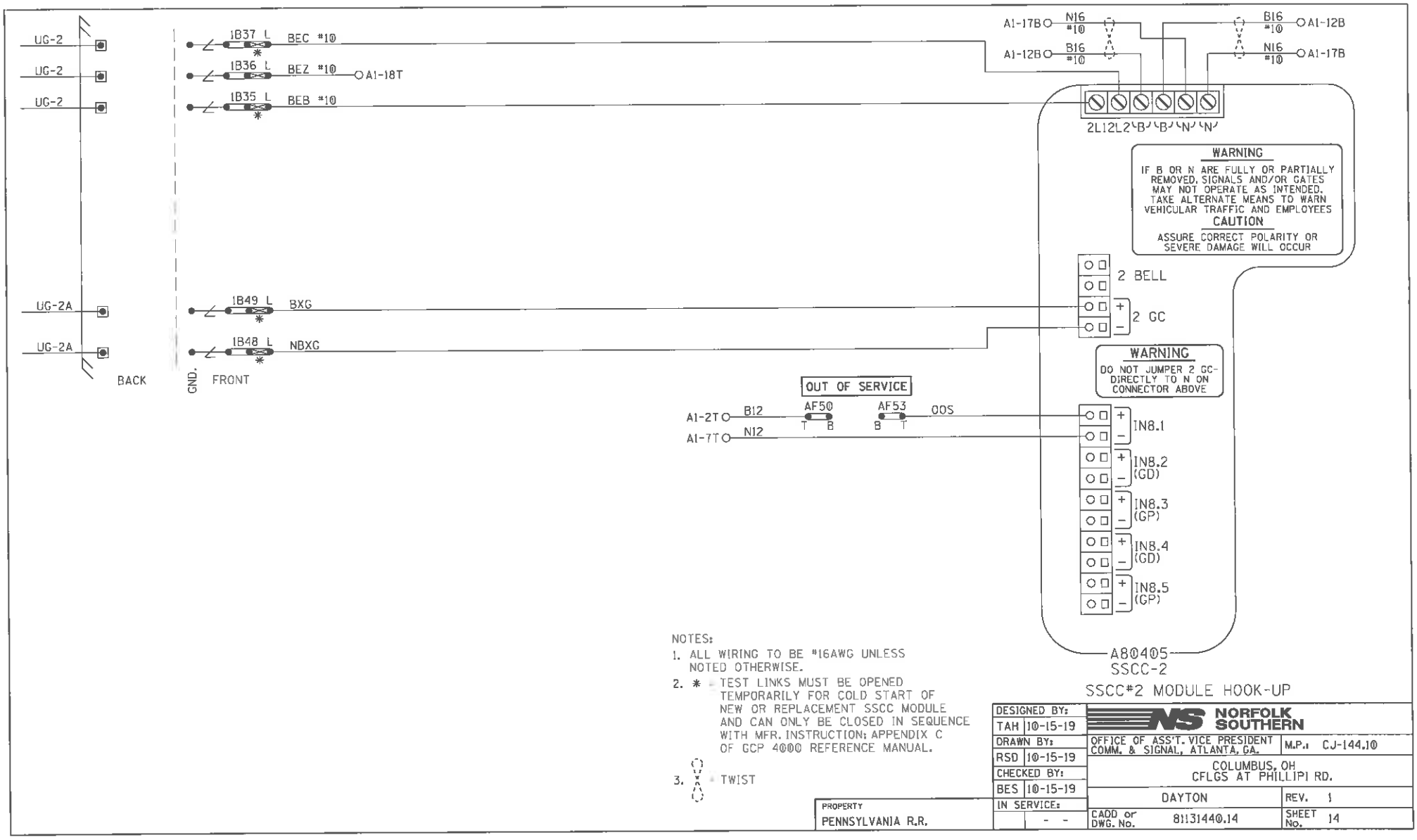

SSCC#2 MODULE HOOK-UP

NOTES:

1. ALL WIRING TO BE #16AWG UNLESS NOTED OTHERWISE.
2. * - TEST LINKS MUST BE OPENED TEMPORARILY FOR COLD START OF NEW OR REPLACEMENT SSCC MODULE AND CAN ONLY BE CLOSED IN SEQUENCE WITH MFR. INSTRUCTION; APPENDIX C OF GCP 4000 REFERENCE MANUAL.
3. TWIST

DESIGNED BY: TAH 10-15-19	NORFOLK SOUTHERN
DRAWN BY: RSD 10-15-19	OFFICE OF ASS'T. VICE PRESIDENT COMM. & SIGNAL, ATLANTA, GA. — M.P.: CJ-144.10
CHECKED BY: BES 10-15-19	COLUMBUS, OH CFLGS AT PHILLIPI RD.
IN SERVICE: - -	DAYTON — REV. 1
PROPERTY: PENNSYLVANIA R.R.	CADD or DWG. No. 81131440.14 — SHEET No. 14

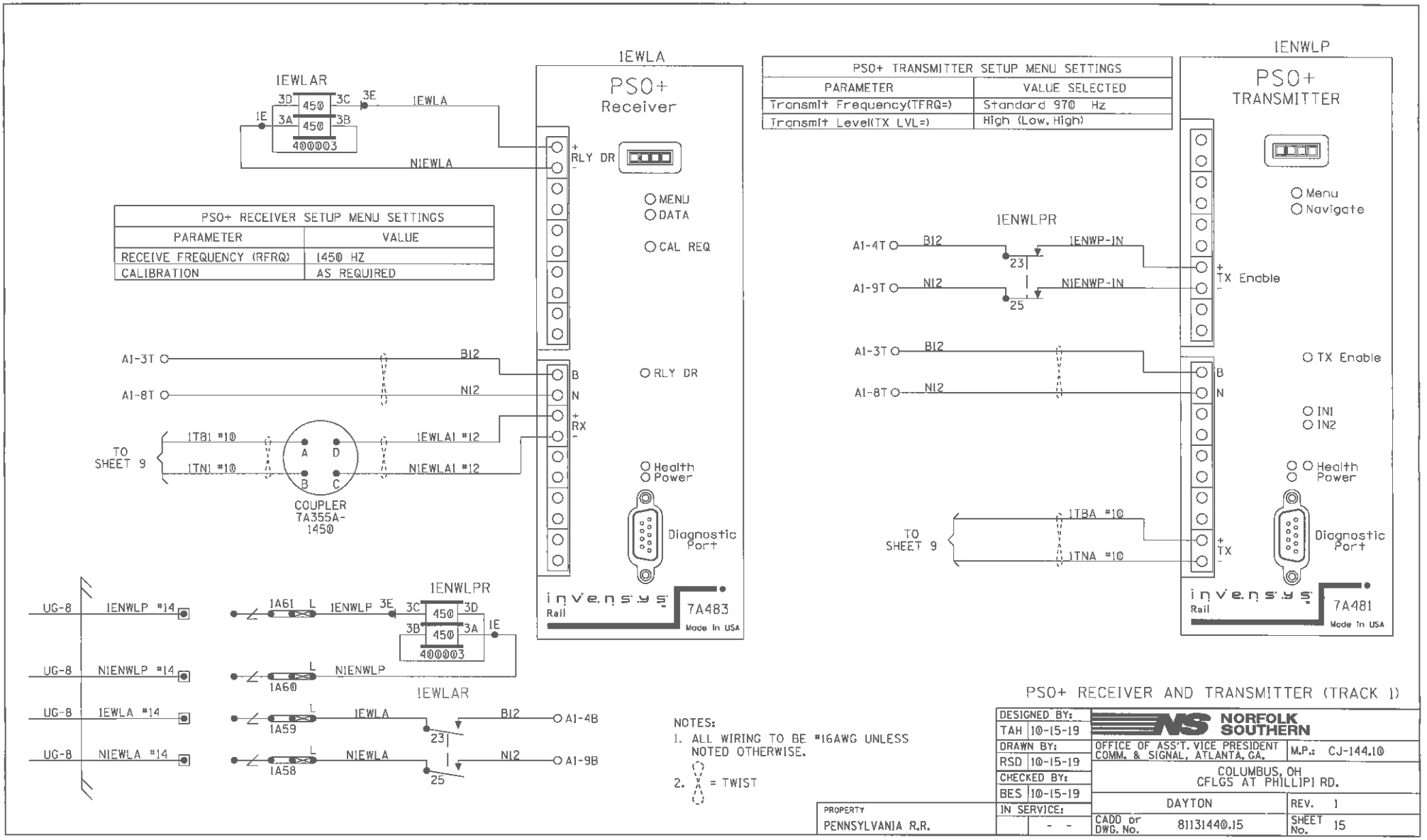

PSO+ RECEIVER SETUP MENU SETTINGS	
PARAMETER	VALUE
RECEIVE FREQUENCY (RFRQ)	1450 HZ
CALIBRATION	AS REQUIRED

PSO+ TRANSMITTER SETUP MENU SETTINGS	
PARAMETER	VALUE SELECTED
Transmit Frequency(TFRQ=)	Standard 970 Hz
Transmit Level(TX LVL=)	High (Low, High)

NOTES:
1. ALL WIRING TO BE #16AWG UNLESS NOTED OTHERWISE.
2. ⟨ ⟩ = TWIST

PSO+ RECEIVER AND TRANSMITTER (TRACK 1)

DESIGNED BY: TAH 10-15-19	NORFOLK SOUTHERN		
DRAWN BY: RSD 10-15-19	OFFICE OF ASS'T. VICE PRESIDENT COMM. & SIGNAL, ATLANTA, GA.	M.P.:	CJ-144.10
CHECKED BY: BES 10-15-19	COLUMBUS, OH CFLGS AT PHILLIPI RD.		
	DAYTON	REV.	1
PROPERTY PENNSYLVANIA R.R.	IN SERVICE: - -	CADD or DWG. No. 81131440.15	SHEET No. 15

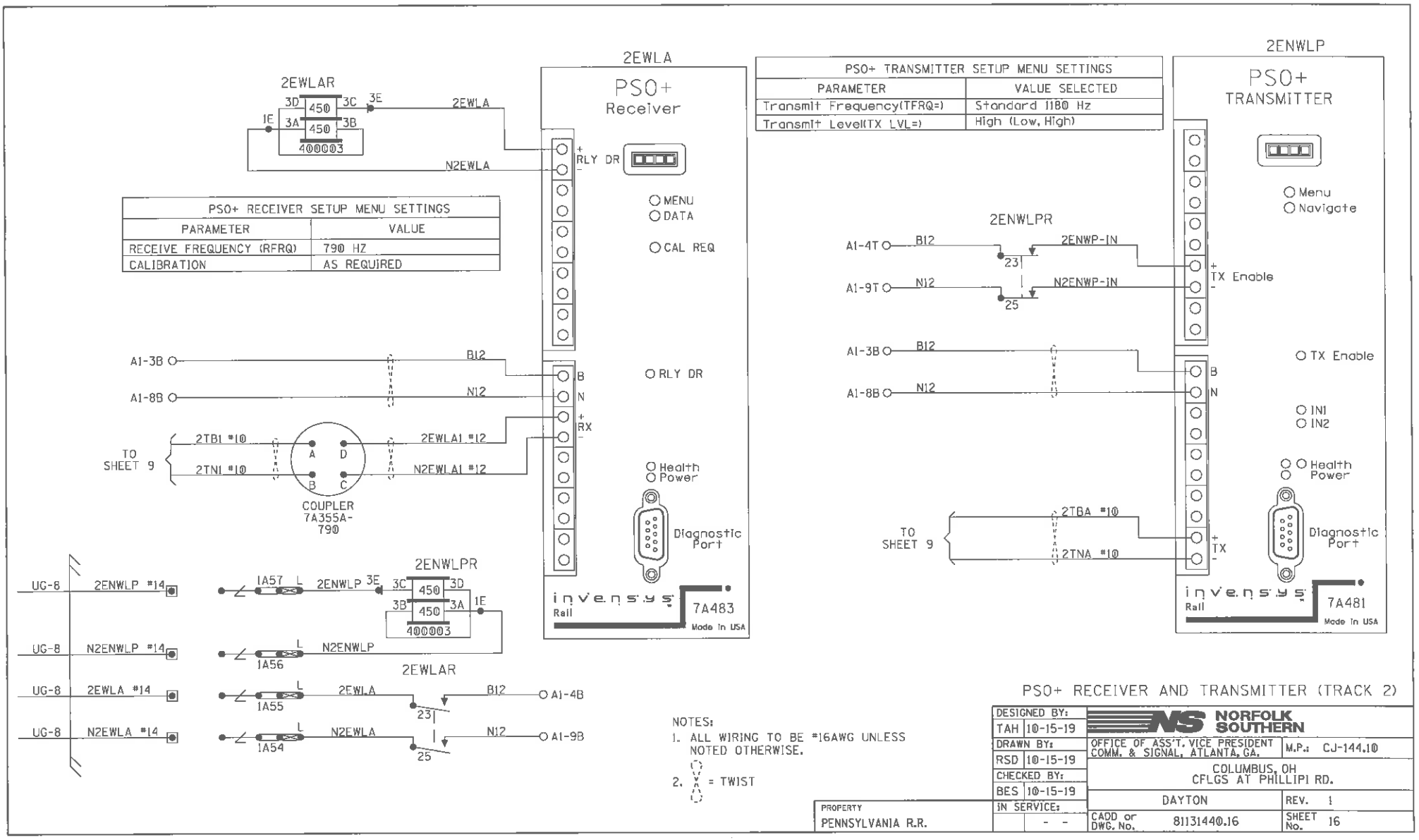

PSO+ RECEIVER SETUP MENU SETTINGS	
PARAMETER	VALUE
RECEIVE FREQUENCY (RFRQ)	790 HZ
CALIBRATION	AS REQUIRED

PSO+ TRANSMITTER SETUP MENU SETTINGS	
PARAMETER	VALUE SELECTED
Transmit Frequency(TFRQ=)	Standard 1180 Hz
Transmit Level(TX LVL=)	High (Low, High)

NOTES:
1. ALL WIRING TO BE #16AWG UNLESS NOTED OTHERWISE.
2. Y = TWIST

PSO+ RECEIVER AND TRANSMITTER (TRACK 2)

DESIGNED BY: TAH 10-15-19	NORFOLK SOUTHERN		
DRAWN BY: RSD 10-15-19	OFFICE OF ASS'T. VICE PRESIDENT COMM. & SIGNAL, ATLANTA, GA.	M.P.: CJ-144.10	
CHECKED BY: BES 10-15-19	COLUMBUS, OH CFLGS AT PHILLIPI RD.		
PROPERTY PENNSYLVANIA R.R.	IN SERVICE: - -	DAYTON	REV. 1
	CADD or DWG. No. 81131440.16		SHEET No. 16

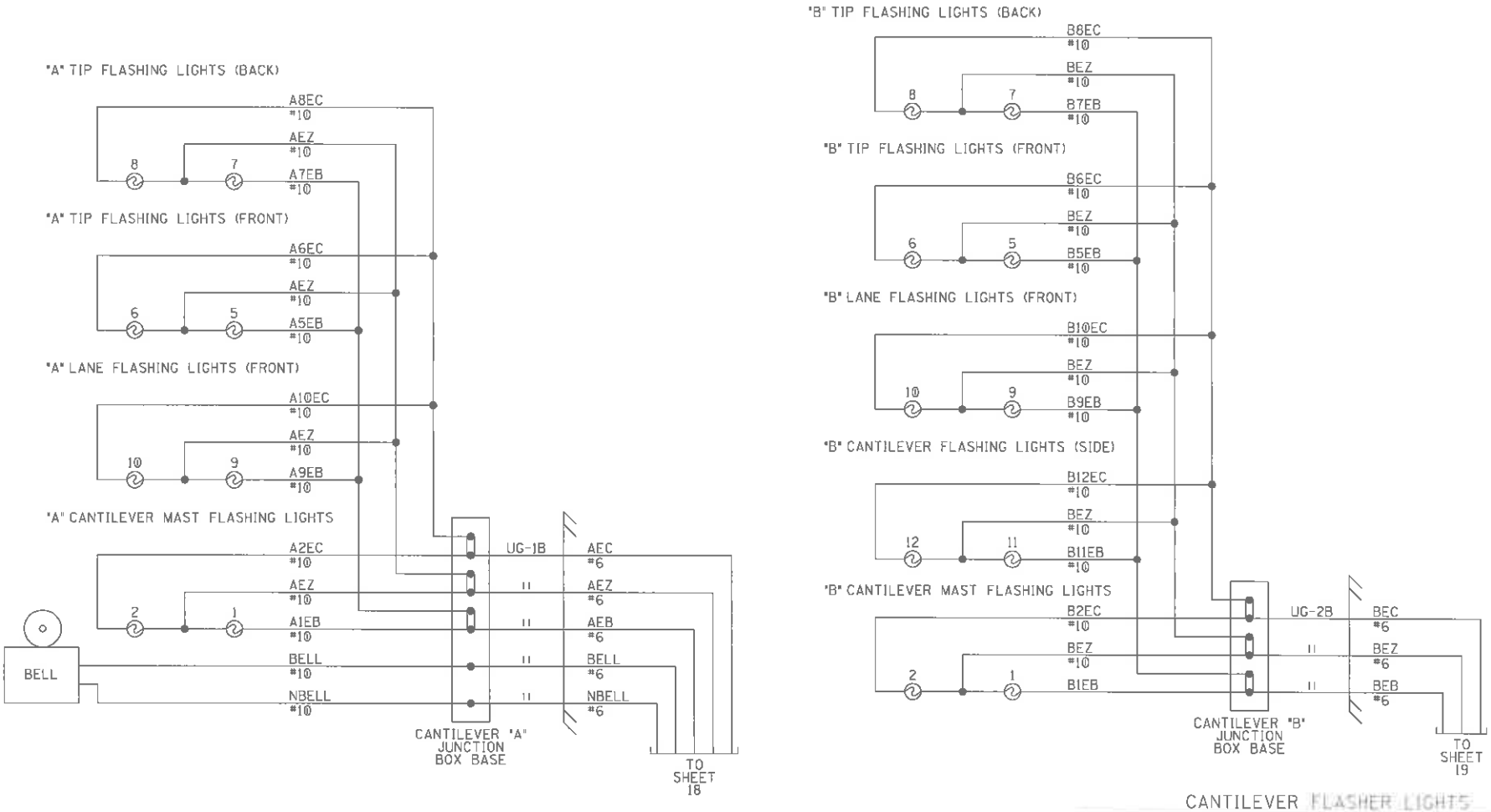

CANTILEVER FLASHER LIGHTS

DESIGNED BY: T&H 10-15-19	NORFOLK SOUTHERN	
DRAWN BY: RSD 10-15-19	OFFICE OF ASS'T. VICE PRESIDENT COMM. & SIGNAL, ATLANTA, GA.	M.P.: CU-144.10
CHECKED BY: BES 10-15-19	COLUMBUS, OH CFLGS AT PHILLIPI RD.	
IN SERVICE:	DAYTON	REV. 1
PENNSYLVANIA R.R.	CADD or DWG. NO. 8131440.17	SHEET NO. 17

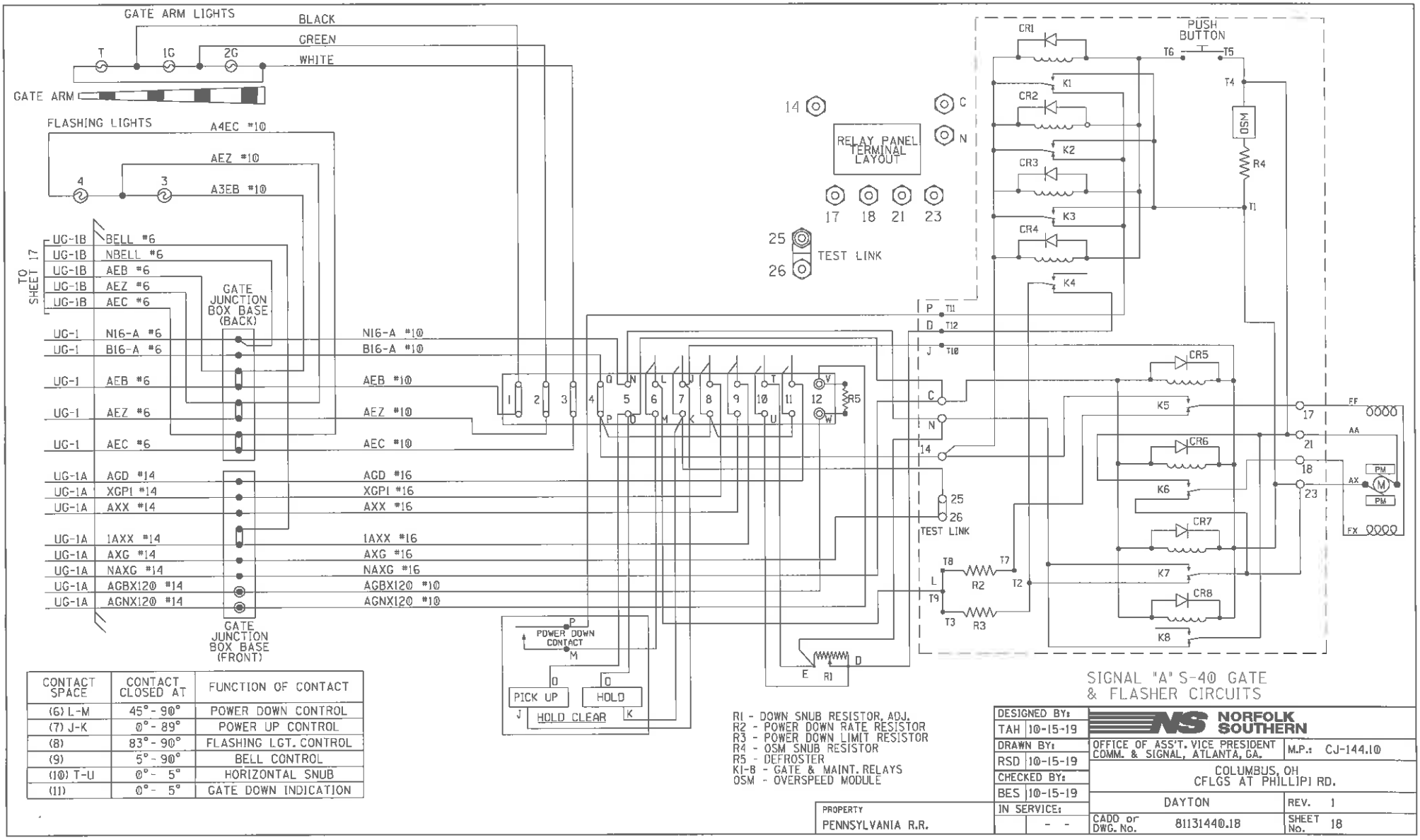

CONTACT SPACE	CONTACT CLOSED AT	FUNCTION OF CONTACT
(6) L-M	45° - 90°	POWER DOWN CONTROL
(7) J-K	0° - 89°	POWER UP CONTROL
(8)	83° - 90°	FLASHING LGT. CONTROL
(9)	5° - 90°	BELL CONTROL
(10) T-U	0° - 5°	HORIZONTAL SNUB
(11)	0° - 5°	GATE DOWN INDICATION

R1 - DOWN SNUB RESISTOR, ADJ.
R2 - POWER DOWN RATE RESISTOR
R3 - POWER DOWN LIMIT RESISTOR
R4 - OSM SNUB RESISTOR
R5 - DEFROSTER
K1-8 - GATE & MAINT. RELAYS
OSM - OVERSPEED MODULE

SIGNAL "A" S-40 GATE & FLASHER CIRCUITS

DESIGNED BY: TAH 10-15-19	NORFOLK SOUTHERN
DRAWN BY: RSD 10-15-19	OFFICE OF ASS'T. VICE PRESIDENT COMM. & SIGNAL, ATLANTA, GA. — M.P.: CJ-144.10
CHECKED BY: BES 10-15-19	COLUMBUS, OH CFLGS AT PHILLIPI RD.
PROPERTY: PENNSYLVANIA R.R.	DAYTON — REV. 1
IN SERVICE: - -	CADD or DWG. No. 81131440.18 — SHEET No. 18

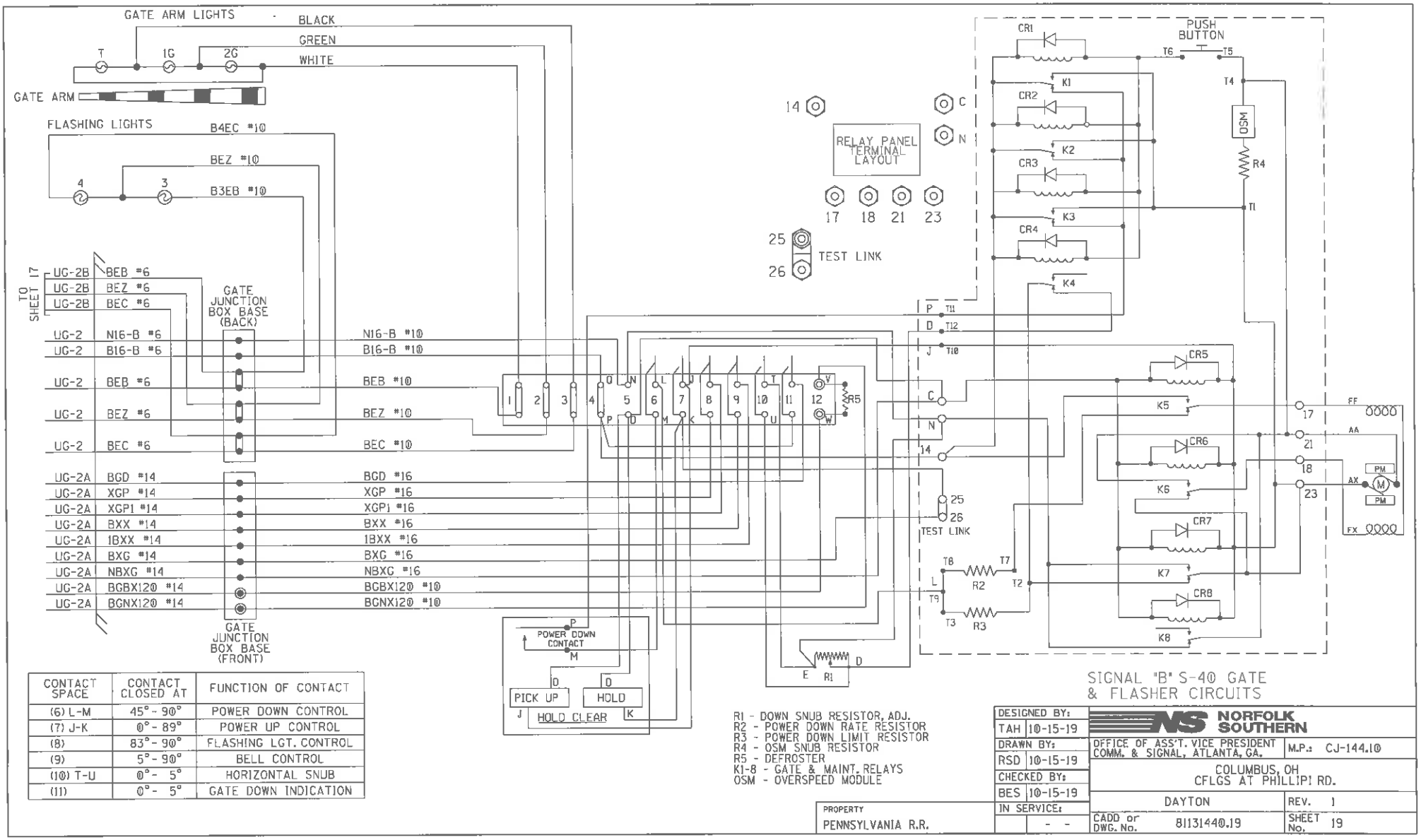

CONTACT SPACE	CONTACT CLOSED AT	FUNCTION OF CONTACT
(6) L-M	45°-90°	POWER DOWN CONTROL
(7) J-K	0°-89°	POWER UP CONTROL
(8)	83°-90°	FLASHING LGT. CONTROL
(9)	5°-90°	BELL CONTROL
(10) T-U	0°-5°	HORIZONTAL SNUB
(11)	0°-5°	GATE DOWN INDICATION

R1 - DOWN SNUB RESISTOR, ADJ.
R2 - POWER DOWN RATE RESISTOR
R3 - POWER DOWN LIMIT RESISTOR
R4 - OSM SNUB RESISTOR
R5 - DEFROSTER
K1-8 - GATE & MAINT. RELAYS
OSM - OVERSPEED MODULE

SIGNAL "B" S-40 GATE & FLASHER CIRCUITS

DESIGNED BY: TAH 10-15-19	NORFOLK SOUTHERN
DRAWN BY: RSD 10-15-19	OFFICE OF ASS'T. VICE PRESIDENT COMM. & SIGNAL, ATLANTA, GA. — M.P.: CJ-144.10
CHECKED BY: BES 10-15-19	COLUMBUS, OH CFLGS AT PHILLIPI RD.
IN SERVICE: - -	DAYTON — REV. 1
PROPERTY PENNSYLVANIA R.R.	CADD or DWG. No. 81131440.19 — SHEET No. 19

LEFT TWO FRONT ROWS TERMINAL BOARD 1

"1B"

"1A"

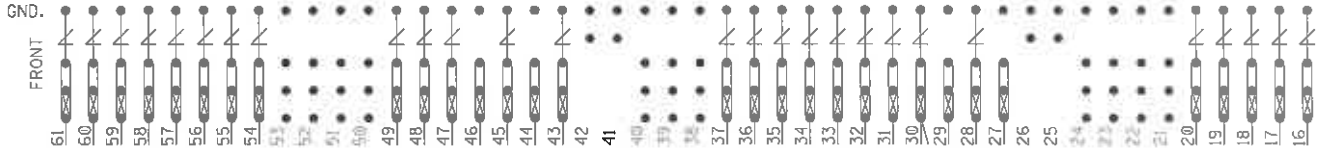

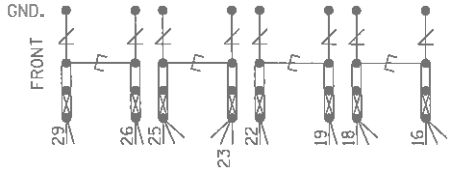

NOTES:

1. ⏚ = HEAVY DUTY EQUALIZER (02270Ø-1X)
2. ⊿ = ERICO LIGHTNING ARRESTER (EPD2050F)
3. ● = THROUGH GROUND POST ON EACH TERMINAL BLOCK TO FARADAY SHIELD
4. ▣ = TEST LINK
5. INSTALL TEST LINKS ON ALL TRACK WIRES AND ON ALL LOW VOLTAGE UNDERGROUND CABLE TERMINATIONS.

SEE FARADAY SHIELD SHOP DRAWING DETAIL FOR HOW THIS PORTION OF THE FARADAY SHIELD IS PREDRILLED. ONLY INSTALL AND USE THE TERMINALS NEEDED.

BACKBOARD 1A & 1B

DESIGNED BY: TAH 10-15-19	NORFOLK SOUTHERN
DRAWN BY: RSD 10-15-19	OFFICE OF ASS'T. VICE PRESIDENT COMM. & SIGNAL, ATLANTA, GA. — M.P.s CJ-144.10
CHECKED BY: BES 10-15-19	COLUMBUS, OH CFLGS AT PHILLIPI RD.
IN SERVICE:	DAYTON — REV. 1
PROPERTY: PENNSYLVANIA R.R.	CADD or DWG. NO. 81131446.70 — SHEET NO. 20

REAR VIEW OF LEFT TWO ROWS TERMINAL BOARD 1

"1A"

"1B"

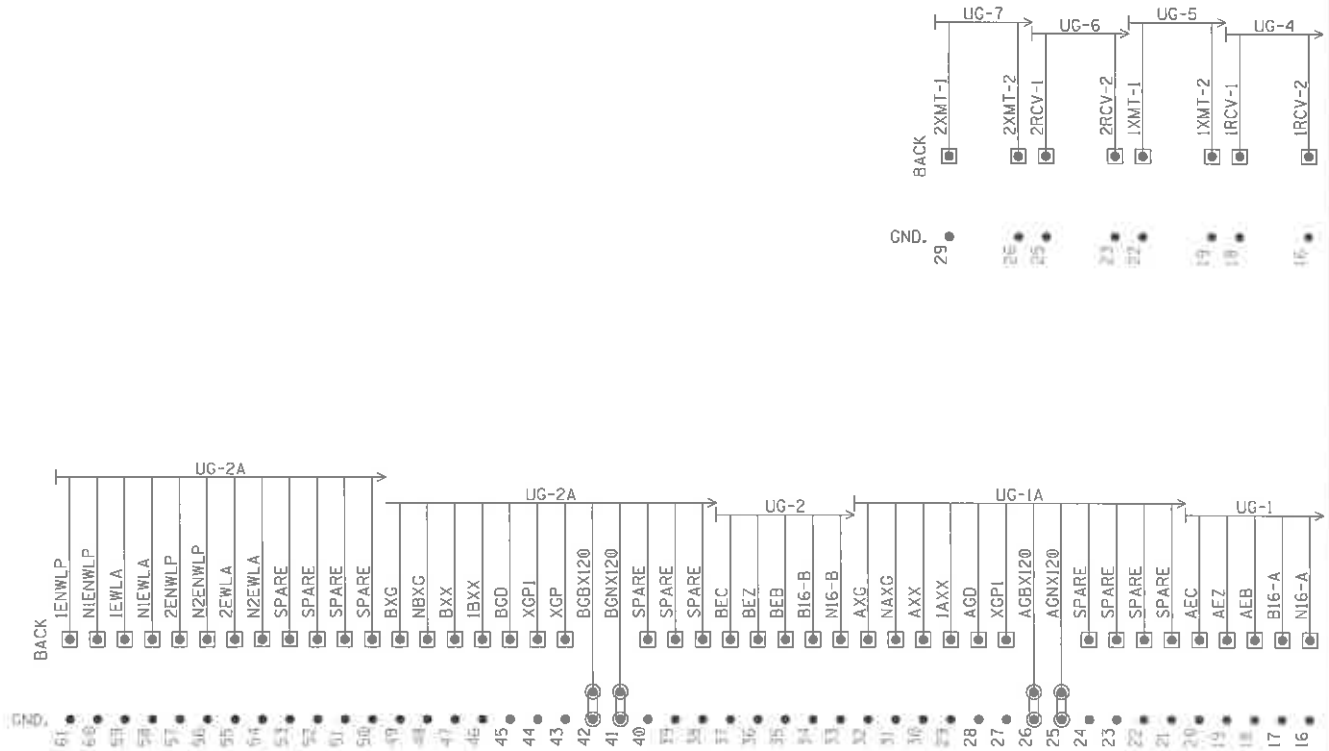

SEE FARADAY SHIELD SHOP DRAWING DETAIL FOR HOW THIS PORTION OF THE FARADAY SHIELD IS PREDRILLED. ONLY INSTALL AND USE THE TERMINALS NEEDED.

NOTES:

1. ● : THROUGH GROUND POST ON EACH TERMINAL BLOCK TO FARADAY SHIELD
2. ● : TEST LINKS MUST BE OPENED
3. ● : INSULATED NUTS TO BE USED ON ALL 120VAC AND ABOVE TERMINALS

REAR BACKBOARD 1A & 1B

DESIGNED BY: TAH 10-15-19	NORFOLK SOUTHERN
DRAWN BY: RSD 10-15-19	OFFICE OF ASS'T. VICE PRESIDENT COMM. & SIGNAL, ATLANTA, GA. — M.P.: CJ-144.10
CHECKED BY: BES 10-15-19	COLUMBUS, OH CFLOS AT PHILLIPI RD.
IN SERVICE: - -	DAYTON — REV. 1
PROPERTY: PENNSYLVANIA R.R.	CADD or DWG. No. 8113440.21 — SHEET No. 21

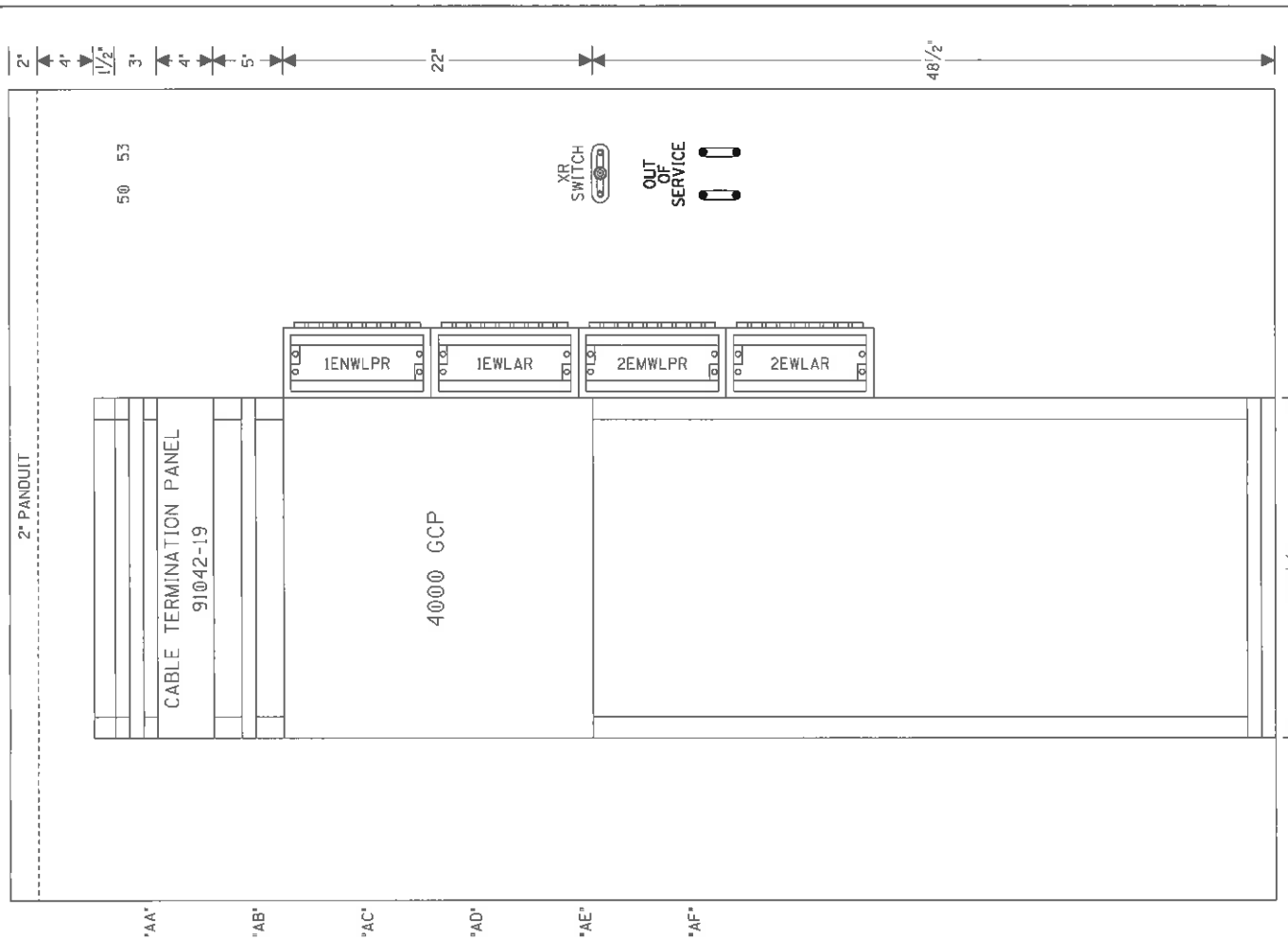

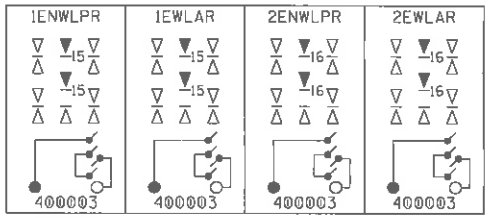

SAFETRAN ALSTOM (GRS) RELAY
CROSS REFERENCE LIST

SAFETRAN	ALSTOM (GRS)
400003	A62-308

SIDE A LAYOUT & RACK PLACEMENT

DESIGNED BY: TAH 10-15-19	NORFOLK SOUTHERN
DRAWN BY: RSD 10-15-19	OFFICE OF ASS'T. VICE PRESIDENT COMM. & SIGNAL, ATLANTA, GA. — M.P.: CJ-144.10
CHECKED BY: BES 10-15-19	COLUMBUS, OH CFLGS AT PHILLIPI RD.
IN SERVICE: - -	DAYTON — REV. 1
PROPERTY: PENNSYLVANIA R.R.	CADD or DWG. No. 81131440.22 — SHEET No. 22

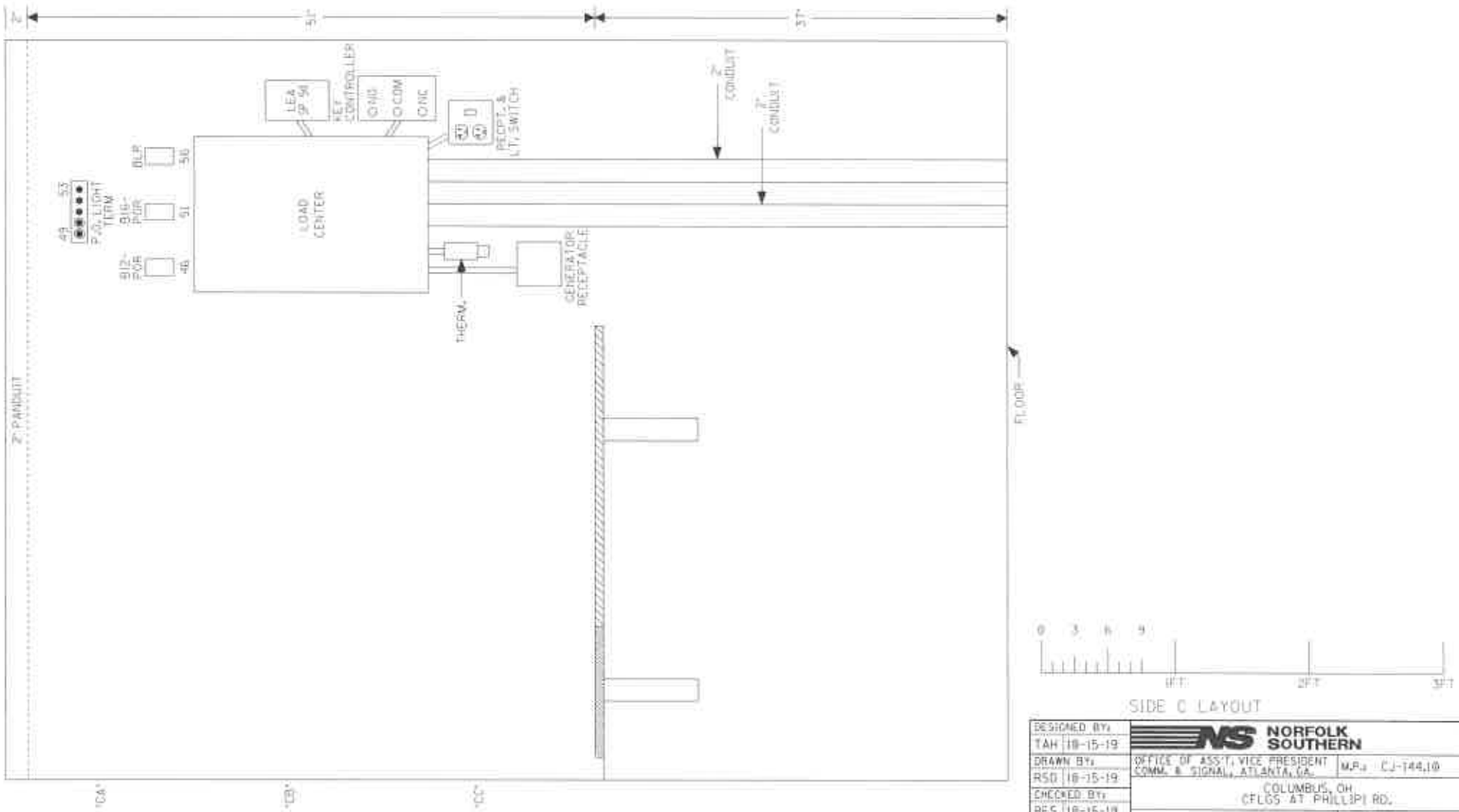

SIDE C LAYOUT

DESIGNED BY: TAH 10-15-19	NORFOLK SOUTHERN		
DRAWN BY: RSD 10-15-19	OFFICE OF ASS'T. VICE PRESIDENT COMM. & SIGNAL, ATLANTA, GA.	M.P.: CJ-144.10	
CHECKED BY: BES 10-15-19	COLUMBUS, OH CFLGS AT PHILLIPI RD.		
IN SERVICE:	DAYTON	REV. 1	
PROPERTY: PENNSYLVANIA R.R.	CADD or DWG. No. 8131440.23	SHEET No. 23	

*TOP VIEW
6'X6' HOUSE (INSULATED)
* = ½" SCALE
SIDE A
SIDE B
SIDE C
SIDE D
CABLE CHUTE
CABLE CHUTE
36"
LIGHT
23" X 84" RACK
B12 BATTERY
B16 BATTERY
LIGHT
EXHAUST FAN
AC UNIT
RECPT. & LT SWITCH
AC POWER CABLE ENT.
GENERATOR RECPT.
SIDE B LAYOUT & TOP VIEW
0 3 6 9
1FT
2FT
3FT
DESIGNED BY: TAH 10-15-19
DRAWN BY: RSD 10-15-19
CHECKED BY: BES 10-15-19
IN SERVICE: - -
NORFOLK SOUTHERN
OFFICE OF ASS'T. VICE PRESIDENT COMM. & SIGNAL, ATLANTA, GA.
M.P.: CJ-144.10
COLUMBUS, OH
CFLGS AT PHILLIPI RD.
DAYTON
REV. 1
CADD or DWG. No. 81131440.24
SHEET No. 24
PROPERTY
PENNSYLVANIA R.R.
FLOOR
FRONT
B12
9 CELLS SAFT
SPL 340 A.H.
BACK
B16
11 CELLS SAFT
SPL 340 A.H.
LAPTOP SHELF
B12 BATTERY CHARGER
B16 BATTERY CHARGER
AC VENT
12VDC
LPC 10593-9
28VDC
LPC 10593-1
59 55 51 46 48 41 28 30 33 37
2" PANDUIT
AC RETURN
DC/DC CONVERTER
KENWOOD RADIO
(FRONT)
RACK EQUIPMENT SPACING
2" PANDUIT
TRACK #1
TRACK #2
PSO COUPLER 7A355A-1450
PSO COUPLER 7A355A-790
1EWLA
1ENWLP
2EWLA
2ENWLP
PSO+
RE-CEIVER 1450HZ 7A483
TRANS-MITTER 970HZ 7A481
RE-CEIVER 790HZ 7A483
TRANS-MITTER 1180HZ 7A481
37"
24½"
28½"
5"
.BA.
.BB.
.BC.

Ohio | Rail Development Commission

Mike DeWine, Governor
Jon Husted, Lt. Governor

Mark Policinski, Chair

August 21, 2019

Norfolk Southern Railway Company
Mr. Kurt Young
Administrator Highway Grade Crossing Improvements
1200 Peachtree Street
Atlanta, GA 30309-3597

RE: PE Authorization Franklin County, CR26/Phillipi Rd., DOT# 513251M PID# 110493

Dear Mr. Young:

A diagnostic review was held at the above grade crossing on April 29, 2019. The crossing has been recommended for modification/upgrade of the current flashing lights and roadway gates.

Norfolk Southern Railway Company is authorized to proceed with the site plans and cost estimates or bid package for this project. This authorization is made with the stipulation and understanding that any field work needs prior approval before work begins. This authorization is made with the stipulation and understanding that an approved estimate may contain entries for items or activities that may be cited and found to be ineligible for federal participation during the project audit. Please note that the railroad must provide ORDC with a plan stamped by a professional engineer licensed in the State of Ohio prior to acceptance and close out of the project.

The diagnostic review form is attached. Please note any recommendations (page 8), if any, made by the team about requirements for this location. Any minor roadway work necessary for MUTCD compliance should be incorporated into the PE and such costs will flow through the railroad reimbursement process.

The Project Manager for this project is Greg Gronbach. Greg Gronbach can be reached at (614) 745-6760, or Gregory.Gronbach@dot.ohio.gov, if you have any questions.

Sincerely,

Greg Gronbach
Project Manager

C: Randall Schumacher, Chief, Rail Division, PUCO
Jill Henry, Rail Specialist, PUCO
Heather Hamilton, ORDC
ORDC (file)

Attachments: 3 (diagnostic review form, letter agreement, purchase order)

OHIO RAIL DEVELOPMENT COMMISSION

Mail Stop #3140, 1980 West Broad Street, Columbus OH 43223

Mike DeWine, Governor • Mark Policinski, ORDC Chairman

July 16, 2019

Norfolk Southern Railway Company
Mr. Kurt Young
Administrator Highway Grade Crossing Improvements
1200 Peachtree Street
Atlanta, GA 30309-3597

Subject: Grade Crossing Warning Device Improvements, PID 110493
Franklin County, CR 26/Phillipi Rd., DOT# 513251M

Dear Mr. Young:

A diagnostic review was conducted at the subject grade crossings on 4/29/2019. Based on the review, the current devices will be modified and upgraded.

This project shall be completed in compliance with Agreement No. 17450, dated December 19, 2012, entered into by the State of Ohio and Norfolk Southern Railway Company (NS) and incorporated as if fully rewritten herein. This construction shall also meet the general terms and conditions under the Fixing America's Surface Transportation Act and subsequent amendments and the State of Ohio's Federally Funded Warning Device Program.

Preliminary engineering (PE) and construction costs shall be borne one hundred percent (100%) by ORDC. Reimbursable costs will be limited by the ORDC based on approved estimates and bid tabulations, if applicable. These limits will be quantified by the ORDC in its construction authorization to NS and may be amended by the ORDC based on revised estimates and bid tabulations.

This Letter Agreement and the approved plans constitute the scope of the project. NS shall notify ORDC in writing of any changes in the scope of work which are not in the approved plans and estimates and secure approval in writing of same before the work is performed.

PE will not be commenced by NS prior to ORDC issuing a PE authorization. PE will be submitted by NS to ORDC within ninety (90) days or other time specified by ORDC in the PE authorization. Construction will not be commenced by NS prior to ORDC issuing a construction authorization. Construction will be completed by NS within nine (9) months or other time specified in the time specified by ORDC in the construction authorization.

Please indicate your acceptance of the terms and conditions of this Letter Agreement by signing and returning one (1) copy to me at the address listed above and retain a copy for your files. This Agreement may be executed in one or more counterparts, each of which shall be deemed to be a duplicate original, but all of which taken together shall be deemed to constitute a single Agreement.

Sincerely,

Matthew Dietrich
Executive Director

Norfolk Southern:

By: Patrick T. Whitehead

Title: General Manager

Date: 7/29/19

FRA CR26 Phillipi Rd NS PID 110493 513251M

Phillipi Road, Franklin County, Norfolk Southern
4/29/2019

Crossing at a glance:

ORDC Notes:

Please Sign In

Name	Title	Organization	Phone Number	Email	Signature
Greg Gronbach	Project Manager	ORDC	614-745-6760	gregory.gronbach@dot.ohio.gov	
Cathy Stout	Safety Program Manager	ORDC	614-971-8470	catherine.stout@dot.ohio.gov	
Heather Hamilton	Coordinator	ORDC	614-273-4783	heather.hamilton@dot.ohio.gov	
Jill Henry	Rail Specialist	PUCO	614-806-3916	jill.henry@puco.ohio.gov	
Mike Meeks	F.C Engineer	Franklin County	614-580-3506	mmeeks@franklincountyengineer.org	
James Jewell	F.C Engineer	Franklin County	614-580-5461	jjewel@franklincountyengineer.org	
Kurt Young		Norfolk Southern	478-973-3698	kurt.young@nscorp.com	
Ted Beidler	F.C Engineer	Franklin County		tbeidler@franklincountyengineer.org	

Phillipi Road, Franklin County, Norfolk Southern
4/29/2019

Please Sign In

Name	Title	Organization	
Rick McGrath		Norfolk Southern	
Phone Number	Email		Signature
614-395-1429	rick.mcgrath@nscorp.com		
Allen Bell	C&S Supervisor	Norfolk Southern	
614-551-0750	allen.bell@nscorp.com		
Bernice Cage		MORPC	
	bcage@morpc.org		
Mark Madden		Norfolk Southern	
~~404 991 0028~~	Mark.Madden@nscorp.com		
CAYLA WIMBERLY		NS	
4049910028			

Reason for Request: Extra-Mile
(e.g. formula, accident, constituent, etc.)

Date: 4/29/2019

Location Data			
Street or Road Name:	Phillipi Road		
County: Franklin	Township:	US DOT No.:	513251M
City (in or near): Columbus	Railroad Name: NS	RR Milepost:	144.07

Safety Data (Obtain crash reports, if possible)		
	Initial Information (from database)	**Revised**
Number & dates of vehicle crashes in previous 5 years:	2 - 2/17 &12/16	
Number & dates of pedestrian/bicycle crashes in previous 5 years:		
Hazard Ranking: 45	Date Run: 04/08/2019	

Existing Traffic Control Devices		
Type of Warning Devices	**Installed?**	**Quantity/Comments**
HIGHWAY		
Advance Warning Signs (condition?)	☒ Yes ☐ No	2
'Stop' Signs	☐ Yes ☒ No	
'Stop Ahead' Signs	☐ Yes ☒ No	
Pavement Markings (condition?)	☒ Yes ☐ No	4 GOOD
Dynamic Envelope Markings (condition?)	☐ Yes ☒ No	
Illumination	☐ Yes ☒ No	
'No Turn' Signs (highway/passive)	☐ Yes ☒ No	
Barriers/fencing (pedestrian/bicycle)	☐ Yes ☒ No	
LOOK Sign	☐ Yes ☒ No	
Do Not Stop On Track Sign	☐ Yes ☒ No	
RAILROAD		
Crossbucks	☒ Yes ☐ No	2
Crossbucks – assembly with Stop	☐ Yes ☒ No	
Crossbucks – assembly with Yield	☐ Yes ☒ No	
Mast-Mounted Flashing Lights	☒ Yes ☐ No	
Cantilever Flashing Lights	☒ Yes ☐ No	Number: Length:
Side Lights	☐ Yes ☒ No	
LED or Incandescent Lights? Size?	☒ Yes ☐ No	INCANDESCENT 12"
Automatic Gates	☒ Yes ☐ No	Number: 2 Length: 35'
Bells	☒ Yes ☐ No	Number: 1
Sidewalk/Pedestrian Gate Arms	☐ Yes ☒ No	Number: Length:
'No Turn' Signs (railroad/active)	☐ Yes ☒ No	
Is crossing flagged by train crew?	☐ Yes ☒ No	
OTHER	☐ Yes ☐ No	

Railroad Data

Type of Train: ☑ Freight ☐ Intercity Passenger ☐ Transit ☐ Shared Use Transit ☐ Commuter ☐ Tourist/Other

Railroad Characteristics	Initial Information (from database)	Revised
Total trains per day	17	THRU
<1 per day? Trains per week		
Day thru trains	8	
Night thru trains	5	
Switching	4	
Total number of tracks	2	
Number of main tracks	2	
Number of other tracks	0	
Maximum train speed	50	
Typical train speed	40-50	
Amtrak	0	

Are there other track(s) crossing this same roadway within 100ft of this crossing? ☐ Yes ☑ No

If yes, Crossing DOT# (if different) _____

If yes, distance _____ (take measurement between track centerlines at closest point along roadway)

If multiple tracks, can two trains occupy crossing at the same time? ☒ Yes ☐ No

Can one train block the motorists' view of another train at the crossing? ☒ Yes (explain below) ☐ No

Can one or more tracks be eliminated through the crossings? ☐ Yes ☒ No

Comments: PARRELL TRACKS

Circuitry: ☒ Constant Warning Time ☐ Motion Detection ☐ AFO ☐ PTC ☐ DC ☐ Other _____

Roadway Data

Local Highway Authority: Franklin County

Roadway Characteristics	Initial Information (from database)	Revised
Average Daily Traffic	~~14,500~~	11,702 (2018)
Highway Paved	☑ Yes ☐ No	☐ Yes ☐ No
Roadway Surface: ☑ Blacktop ☐ Gravel ☐ Concrete Other_____		
Roadway width (paved/travelled way): 48' ft		
Number of Highway Lanes	4	
Urban or Rural	Urban - Minor Collector	
Vehicle Speed: 45 ~~n/a~~ MPH		
School Bus Operation: ☒ Yes ☐ No Amount 8 LIGHT TO MODERATE		
Location of nearby schools: PRAIRIE LINCOLN ELEMENTARY - 1 MILE WEST. IMAGINE SCHOOL GREAT WESTERN 1.8 SE		
Hazardous Materials Trucks: ☑ Yes ☐ No Amount (from FRA) 4% LHA verified/changed?		
Shoulders: ☑ Yes ☐ No		
Is the Shoulder Surfaced? ☑ Yes ☐ No If yes, shoulder width: 5 ft.		
Is there existing guardrail along the roadway in crossing vicinity? ☐ Yes ☑ No		
Crossing Angle ☐ 0-29° ☐ 30-59° ☑ 60-90° Measured in _____ Quadrant?		

Quadrant NW Curb & Gutter:	Quadrant SE Curb & Gutter:
☐ Functional (Curb height = 4" or more)	☐ Functional (Curb height = 4" or more)
☐ Non-functional (Curb height = less than 4")	☐ Non-functional (Curb height = less than 4")
☒ None	☒ None

Is there a nearby intersection that could cause queuing over the crossing? ☐ Yes ☒ No

If yes, distance _____

Is this intersection signalized? ☐ Yes ☐ No

Are there signals currently interconnected with the existing crossing warning devices? ☐ Yes ☒ No

Is there a 'Do Not Stop on Track' sign? ☐ Yes ☒ No

Is a roadway improvement project (e.g. widening, turn lanes, nearby new or upgraded traffic signal, sidewalk) planned at or near this location in the foreseeable future? ☐ Yes ☒ No

If yes:

Improvement type_____ Lead Agency_____ Timeline/completion_____

Pedestrian & Bicycle Data

Regular pedestrian usage: ☒ Yes ☐ No Volumes: ☒ Occasional ☐ <20 ☐ 20-60 ☐ >60

Is sidewalk present in the approach? ☐ Yes ☒ No Quadrants:

Does crossing surface accommodate pedestrians? ☐ Yes ☒ No

Both sides of roadway? ☐ Yes ☒ No If no, which side is paved?

Pedestrian generators in close proximity (e.g. schools, sports/entertainment venues)? ☐ Yes ☒ No

Comments: COMMERCIAL / INDUSTRIAL AREA.

Regular bicycle usage: ☐ Yes ☒ No

☐ Roadway ☐ Dedicated Lane (on street) ☐ Dedicated Path (off street) ☐ Shared Use (pedestrian/bicycle) Path
☐ Bikes must use sidewalk

Future plans for pedestrian or bicycle routes? ☐ Yes ☒ No

Comments:

Utility Information

Is commercial power available? ☒ Yes ☐ No

Utility Provider (Company Name) AEP

Nearest Available Power Source ___ AT CROSSING

What other utilities are present? ☒ Gas ☐ Cable ☐ Telephone ☒ Fiber Optic Cable (add locations to sketch)
☐ Petroleum ☒ Water ☒ Sanitary Sewer ☐ Other

Comments:

Surface

Surface review form completed? ☐ Yes ☒ No SURFACE FAIRLY NEW - GOOD CONDITION.

Sight Preview (REFER TO TABLES)

If non-gated crossing, is clearing sight distance adequate in all quadrants? (See Table 1) ☒ Yes ☐ No

Is stopping sight distance adequate? (See Table 2) ☒ Yes ☒ No If no, which quadrant? _____

When considering recommendations for bicycle treatments:

Bicycle sight distance adequate? ☒ Yes ☐ No If no, which quadrant? _____

When considering recommendations for pedestrian treatments:

Pedestrian sight distance adequate? ☒ Yes ☐ No If no, which quadrant? _____

Potential Red Flags / Project Challenges
Traffic Signal Preemption (include traffic signal intersection name and LHA with jurisdiction over traffic signal, if known): N/A
Crossing Consolidation or Closure: NO
Real Estate or ROW: NO
Culvert / Drainage / Ballast Conditions: CULVERTS ON BOTH NORTH AND SOUTH SIDES OF TRACKS.
Roadway and/or Sidewalks: NO
Circuitry (e.g. reaches out to other crossings, specific needs, etc.): NO
Environmental: NO
Utilities: NO
Other:

Potential Closure

Is it the consensus of the Diagnostic Review Team that this is a potential closure project? NO

Explain reasons: MAJOR ARTERIAL ROADWAY IN CITY.

Diagnostic Team Recommendations

	Quadrants Needed
☐ **No improvements needed**	
☒ **Install/upgrade active devices**	
☐ Automatic Flashing Lights (AFLS)	
☐ AFLS /Cants	
☐ AFLS / Gates	
☒ AFLS / Gates / Cants	1
☒ Bells / number	
☒ Upgrade circuitry / type	GCP 4000
☒ Sidelights	FOR GLOBAL COLD STORAGE ENTRANCE
☐ LED Upgrades	
☐ Guardrail Needed	
☐ Install/Replace curb	
☒ Bungalow placement & offset from rail & highway	BEHIND OLD HOUSE
☒ Other (define)	BERM WALL + CULVERT

Comments: INCLUDE ESTIMATE FOR SURFACE. (possible future surface project - AR & LHA)

☐ Install/upgrade traffic signal preemption

Other (define): COUNTY TO REPAINT PAVEMENT EDGE LINES + MARKINGS.

Diagnostic Team Recommendations (cont.)

PEDESTRIAN/BICYCLE Treatments (additional, not included above)

☐Crossing Surface (specify)	☐Sidewalk (specify)
☐Detectable warning surfaces	☐LOOK Sign (R15-8)
☐Stop lines	☐Illumination
☐Dynamic envelop markings	☐Channelization
☐Path delineation	☐Fencing/barriers

☐Other

Comments:

Acknowledgement of Recommendations (each entity represented at the diagnostic must have at least one signature/initial acknowledgement):

CWG

Field Sketch (optional)

Include utilities as marked by OUPS and LHA; include ROW boundaries as indicated by railroad and LHA.

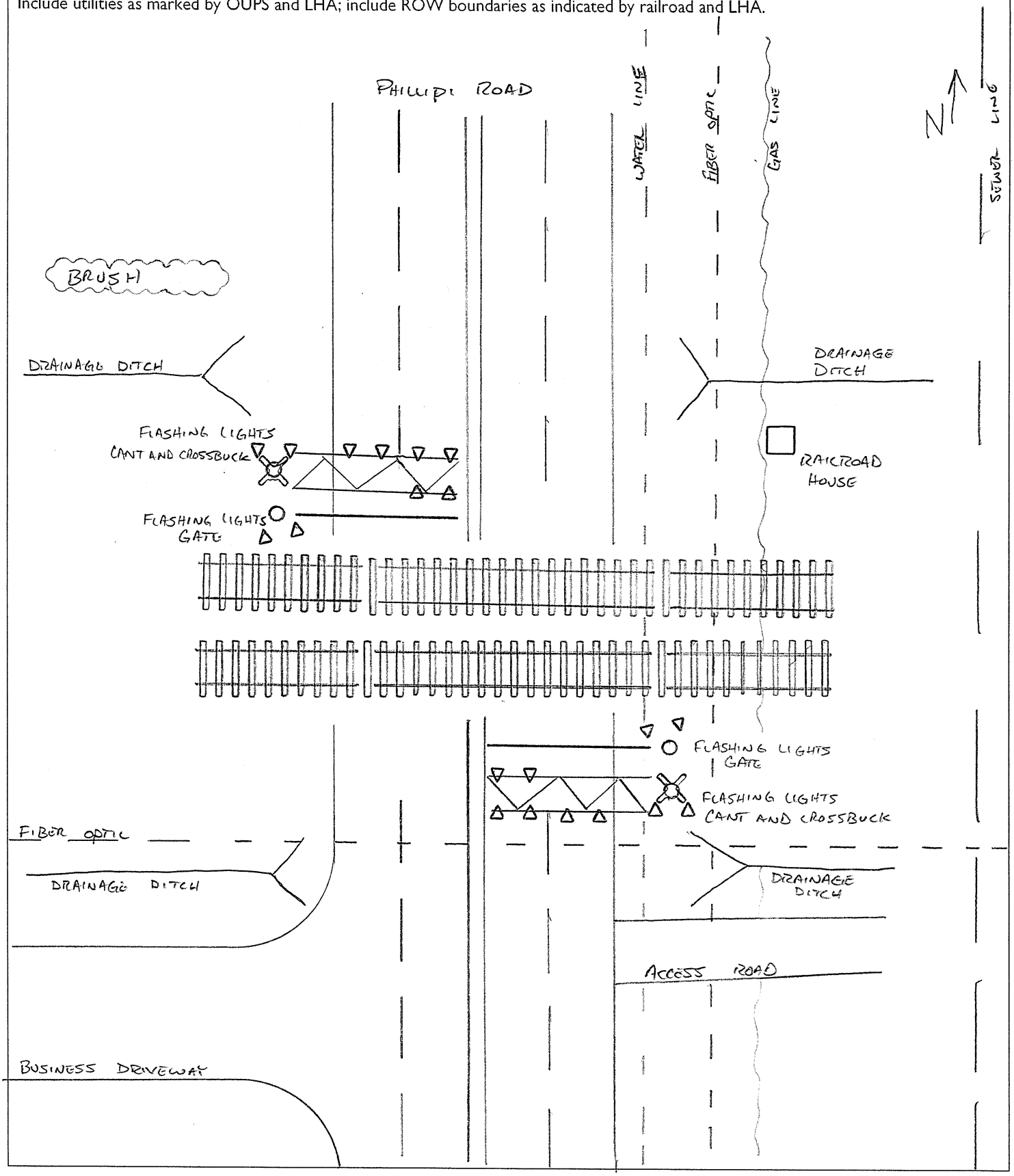

Clearing Sight Distances

Maximum Authorized Train Speed	Distance (dT) Along Railroad from Crossing (ft)
1 - 10	240
15	360
20	480
25	600
30	720
35	840
40	960
45	1080
50	1200
55	1320
60	1440
65	1560
70	1680
75	1800
80	1920
85	2040
90	2160

Source: R-H Grade Crossing Handbook Table 36 (pp. 132-133)

Notes:

All calculated distances are rounded up to the next higher 5-foot increment.

Distances indicated are for 65-ft double bottom semi-tractor trailers and level single track 90 degree crossings; and may need to be adjusted for multiple tracks, skewed crossings or approaches on grades.

Clearing Sight Distance is to be measured in each vehicle travel direction at non-gated crossings as viewed from a point 25 feet from centerline of nearest track in the center of whichever travel lane is nearest the direction along track being measured.

Stopping Sight Distances

Highway Vehicle Speed	Distance (dH) Along Roadway from Crossing (ft)
0	n/a
5	50
10	70
15	105
20	135
25	180
30	225
35	280
40	340
45	410
50	490
55	570
60	660
65	760
70	865

Source: R-H Grade Crossing Handbook Table 36 (pp. 132-133)

Notes:

All calculated distances are rounded up to the next higher 5-foot increment.

Distances indicated are for 65-ft double bottom semi-tractor trailers on dry level pavements.

Stopping Sight Distance is to be measured on each roadway approach to crossing from stop bar.

Bicycle & Pedestrian Clearing Sight Distances

Clearing Sight Distance from Stop Position*											
Crossing of one track								Crossing 2 Tracks		Crossing 3 Tracks	
Train Speed	Car	Single-unit Truck	Bus	WB-50 Semitruck	65-foot Double Truck	Pedestrian[1]	Bicyclist[2]	Pedestrian[1]	Bicyclist[2]	Pedestrian[1]	Bicyclist[2]
10	105	185	200	225	240	120	100	180	120	240	140
20	205	365	400	450	485	240	200	360	240	480	270
25	255	455	500	560	605	300	250	450	290	590	340
30	310	550	600	675	725	360	290	530	350	710	410
40	410	730	795	895	965	480	390	710	470	950	540
50	515	910	995	1,120	1,205	590	490	890	580	1180	670
60	615	1,095	1,195	1,345	1,445	710	580	1060	700	1420	810
70	715	1,275	1,395	1,570	1,680	830	680	1240	810	1650	940
80	820	1,460	1,590	1,790	1,925	950	780	1420	930	1890	1080
90	920	1,640	1,790	2,015	2,165	1060	870	1590	1040	2120	1210

*A single track, 90-degree, level crossing

[1] Walking 3.5 feet per second across tracks 15 feet apart, with a 2-second reaction time to reach a decision point 10 feet before the center of the first track, and clearing 10 feet beyond the centerline of the second track.

[2] Bicycling 8 miles per hour across tracks 15 feet apart, from a stopped position 10 feet before the center of the first track with an acceleration of 2.5 feet per second, and clearing 10 feet beyond the centerline of the second track on a bike of 6 feet length.

High Hazard Crossing with Active Warning Devices			
Street Name: Phillipi Road		County: Franklin	
LHA: Franklin County		USDOT#: 513251M	
Nearest City: Columbus		Hazard Rank: 45	
Roadway Information			
ADT: 14,500	Posted Speed Limit: n/a		
Railroad: Norfolk Southern	Number of Tracks: 2		
Train Count: 17	Speed Over Crossing: 40-50		
Storage Distance (Ft.):	Train Detection Type:		
Accidents			
Accident Factors	# of Accidents in Last 5 Years:		
	# of Fatalities in Last 5 Years:		
Accident Date	2/19/2017	12/19/2016	
Position of Accident	Moving over crossing	Stalled or stuck on crossing	
Circumstance	Rail equipment struck by highway user	Rail equipment struck highway user	
Visibility/Time of Day	Dark / 3:00 am	Dark / 10:23 pm	
Weather Conditions	Clear / 56 degrees	Clear / 13 degrees	
Crossing Interconnect.	No	No	
Crossing Illuminated	No	No	
Drove Around Train	No	No	
Highway User Action	Went around the gate	Stopped on crossing	
Alcohol/Drug Related?	Suspected	n/a	
Driver Speeding?	n/a	n/a	
Other Notes: 2017 - Traveling North on Phillipi, vehicle struck a moving train. Sited for disobeying train signal. No injuries reported. 2016 - Vehicle 1 was rear-ended northbound on Phillipi, south of the tracks, being pushed over the tracks. Vehicle 2 came to rest on the tracks and was stuck but unoccupied when train struck. No injuries reported.			
Notes:			

This foregoing document was electronically filed with the Public Utilities

Commission of Ohio Docketing Information System on

2/5/2020 2:20:37 PM

in

Case No(s). 20-0358-RR-FED

Summary: Application In the Matter of a Request for Upgrades to the Active Warning Devices at the Norfolk Southern Railway Crossing, Phillipi Road, DOT#513-251M, in Franklin County, Ohio. electronically filed by Mrs. Jill A Henry on behalf of PUCO/Rail Division