AMERICAN ELECTRIC POWER

Legal Department

November 25. 2019

Chairman Samuel Randazzo
Public Utilities Commission of Ohio
180 East Broad Street
Columbus, OH 43215-3793

Tanner Wolffram
Counsel
Regulatory Services
(614) 716-2914 (T)
tswolffram@aep.com

Re: **In the Matter of the Application of**	)	
Gerken Asphalt Plant	)	
and Ohio Power Company	)	**Case No. 19-1628-EL-EEC**
for Approval of a Special Arrangement	)	
Agreement with a Mercantile Customer	)	

Dear Chairman Randazzo,

Attached please find the Joint Application of Ohio Power Company (AEP Ohio) and the above-referenced mercantile customer for approval of a Special Arrangement of the commitment of energy efficiency/peak demand reduction (EE/PDR) resources toward compliance with the statutory benchmarks for 2019 (hereinafter "Joint Application").

Amended Substitute Senate Bill 221, codified at R.C. 4928.66, sets forth EE/PDR benchmarks that electric distribution utilities are required to meet or exceed. The statute allows utilities to include EE/PDR resources committed by mercantile customers for integration into the utilities' programs to be counted toward compliance with a utility's EE/PDR benchmarks. The statute also enables the Commission to approve special arrangements for mercantile customers that commit EE/PDR resources to be counted toward compliance with EE/PDR benchmarks.

The Commission's Order in Case No. 10-834-EL-EEC established a streamlined process to expedite review of these special arrangements by developing a sample application process for parties to follow for consideration of such programs implemented during the prior three calendar years. The attached Joint Application and affidavit conforms with AEP Ohio's version of the streamlined sample application. As requested by Commission Staff, any confidential information referenced in the Joint Application has been provided confidentially to Commission Staff for filing in Commission Docket 10-1599-EL-EEC and subject to the confidentially protections of R.C. 4901.16 and OAC 4901-1-24(E). AEP Ohio respectfully requests that the Commission treat the two cases as associated dockets and that any confidential information provided to Staff for filing in connection with the Joint Application be subject to the protective order requested in Docket 10-1599-EL-EEC.

Cordially,

/s/ Tanner Wolffram
Attachment

Ohio | Public Utilities Commission

Application to Commit Energy Efficiency/Peak Demand Reduction Programs (Mercantile Customers Only)

Case No.: 19-1628-**EL-EEC**

Mercantile Customer: GERKEN ASPHALT PLANT

Electric Utility: Ohio Power

Program Title or Description: AEP Ohio Business Incentives for Energy Efficiency: Self Direct Program

Rule 4901:1-39-05(F), Ohio Administrative Code (O.A.C.), permits a mercantile customer to file, either individually or jointly with an electric utility, an application to commit the customer's existing demand reduction, demand response, and energy efficiency programs for integration with the electric utility's programs. The following application form is to be used by mercantile customers, either individually or jointly with their electric utility, to apply for commitment of such programs in accordance with the Commission's pilot program established in Case No. 10-834-EL-POR

Completed applications requesting the cash rebate reasonable arrangement option (Option 1) in lieu of an exemption from the electric utility's energy efficiency and demand reduction (EEDR) rider will be automatically approved on the sixty-first calendar day after filing, unless the Commission, or an attorney examiner, suspends or denies the application prior to that time. Completed applications requesting the exemption from the EEDR rider (Option 2) will also qualify for the 60-day automatic approval so long as the exemption period does not exceed 24 months. Rider exemptions for periods of more than 24 months will be reviewed by the Commission Staff and are only approved up the issuance of a Commission order.

Complete a separate application for each customer program. Projects undertaken by a customer as a single program at a single location or at various locations within the same service territory should be submitted together as a single program filing, when possible. Check all boxes that are applicable to your program. For each box checked, be sure to complete all subparts of the question, and provide all requested additional information. Submittal of incomplete applications may result in a suspension of the automatic approval process or denial of the application.

Any confidential or trade secret information may be submitted to Staff on disc or via email at ee-pdr@puc.state.oh.us.

Section 1: Company Information

Name: GERKEN ASPHALT PLANT

Principal address: 9072 County Road 424, Napoleon, Oh 43545

Address of facility for which this energy efficiency program applies: 310 Quarry Dr Rear, Bluffton, Oh 45817

Name and telephone number for responses to questions:

Andy Knepley, Gerken Asphalt Plant, (419) 533-2421

Electricity use by our company (check the box(es) that apply):

☐ The customer uses more than seven hundred thousand kilowatt hours per year at our facility. (Please attach documentation.)

See Confidential and Proprietary Attachment 4 - Calculation of Rider Exemption and UCT which provides the facility consumption for the last three years, benchmark kWh, and the last 12 months usage.

☒ The customer is part of a national account involving multiple facilities in one or more states. (Please attach documentation.) When checked, see Attachment 6 - Supporting Documentation for a listing of the customer's name and service addresses of other accounts in the AEP Ohio service territory.

Section 2: Application Information

A) The customer is filing this application (choose which applies):

☐ Individually, on our own.

☒ Jointly with our electric utility.

B) Our electric utility is: Ohio Power Company

The application to participate in the electric utility energy efficiency program is "Confidential and Proprietary Attachment 3 - Self Direct Program Project Completed Application."

C) The customer is offering to commit (choose which applies):

☐ Energy savings from our energy efficiency program. (Complete Sections 3, 5, 6, and 7.)

☐ Capacity savings from the customer's demand response/demand reduction program. (Complete Sections 4, 5, 6, and 7.)

☒ Both the energy savings and the demand reduction from the customer's energy efficiency program. (Complete all sections of the Application.)

Section 3: Energy Efficiency Programs

A) The customer's energy efficiency program involves (choose whichever applies):

☒ Early replacement of fully functioning equipment with new equipment. (Provide the date on which the customer replaced fully functioning equipment, 3/15/2018 and the date on which the customer would have replaced your equipment if you had not replaced it early. Please include a brief explanation for how the customer determined this future replacement date (or, if not known, please explain why this is not known)).

The remaining life of the equipment varies and is not known with certainty. The future replacement date is unknown and has historically been at the end of equipment life. Replacement was completed early to achieve energy savings and to reduce future maintenance costs.

☐ Installation of new equipment to replace equipment that needed to be replaced. The customer installed new equipment on the following date(s):

☐ Installation of new equipment for new construction or facility expansion. The customer installed new equipment on the following date(s):

☐ Behavioral or operational improvement.

B) Energy savings achieved/to be achieved by your energy efficiency program:

1) If you checked the box indicating that your project involves the early replacement of fully functioning equipment replaced with new equipment, then calculate the annual savings [(kWh used by the original equipment) - (kWh used by new equipment) = (kWh per year saved)]. Please attach your calculations and record the results below:

Unit Quantity (watts) = Existing (watts x units) - Installed (watts x units)

kWh Reduction (Annual Savings) = Unit Quantity x (Deemed kWh/Unit)

Annual savings: 128,442 kWh

See Confidential and Proprietary Attachment 5 - Self Direct Program Project Calculation for annual energy savings calculations Attachment 6 - Supporting Documentation for custom measures work papers that provide all methodologies, protocols, and practices used in this application for custom measures, as needed.

2) If you checked the box indicating that you installed new equipment to replace equipment that needed to be replaced, then calculate the annual savings [(kWh used by less efficient new equipment) - (kWh used by the higher efficiency new equipment) = (kWh per year saved)]. Please attach your calculations and record the results below:

   Annual savings: kWh

   Please describe the less efficient new equipment that you rejected in favor of the more efficient new equipment.

3) If you checked the box indicating that your project involves equipment for new construction or facility expansion, then calculate the annual savings [(kWh used by less efficient new equipment) - (kWh used by higher efficiency new equipment) = (kWh per year saved)]. Please attach your calculations and record the results below:

   Annual savings: kWh

   Please describe the less efficient new equipment that you rejected in favor of the more efficient new equipment.

4) If you checked the box indicating that the project involves behavioral or operational improvements, provide a description of how the annual savings were determined.

Section 4: Demand Reduction/Demand Response Programs

A) The customer's program involves (check the one that applies):

☒ Coincident peak-demand savings from the customer's energy efficiency program.

☐ Actual peak-demand reduction. (Attach a description and documentation of the peak-demand reduction.)

☐ Potential peak-demand reduction (check the one that applies):

- Choose one or more of the following that applies:

  ☐ The customer's peak-demand reduction program meets the requirements to be counted as a capacity resource under a tariff of a regional transmission organization (RTO) approved by the Federal Energy Regulatory Commission.

  ☐ The customer's peak-demand reduction program meets the requirements to be counted as a capacity resource under a program that is equivalent to an RTO program, which has been approved by the Public Utilities Commission of Ohio.

B) On what date did the customer initiate its demand reduction program?

The coincident peak-demand savings are permanent installations that reduce demand through energy efficiency and were installed on the date specified in Section 3 A above.

C) What is the peak demand reduction achieved or capable of being achieved (show calculations through which this was determined):

Unit Quantity (watts) = Existing (watts x units) - Installed (watts x units)

KW Demand Reduction = Unit Quantity (watts) x (Deemed KW/Unit (watts))

24.2 kW

See Confidential and Proprietary Attachment 5 - Self Direct Program Project Calculation for peak demand reduction calculation, and Attachment 6 - Supporting Documentation for custom measures work papers that provide all methodologies, protocols, and practices used in this application for custom measures, as needed.

Section 5: Request for Cash Rebate Reasonable Arrangement (Option 1) or Exemption from Rider (Option 2)

Under this section, check the box that applies and fill in all blanks relating to that choice.

Note: If Option 2 is selected, the application will not qualify for the 60-day automatic approval. All applications, however, will be considered on a timely basis by the Commission.

A) The customer is applying for:

☒ Option 1: A cash rebate reasonable arrangement.

OR

☐ Option 2: An exemption from the cost recovery mechanism implemented by the electric utility.

OR

☐ Commitment payment

B) The value of the option that the customer is seeking is:

Option 1: A cash rebate reasonable arrangement, which is the lesser of (show both amounts):

☒ A cash rebate of $ 6,743.21. (Rebate shall not exceed 50% project cost. Attach documentation showing the methodology used to determine the cash rebate value and calculations showing how this payment amount was determined.)

See Confidential and Proprietary Attachment 5 - Self Direct Program Project Calculation for incentive calculations for this mercantile program.

Option 2: An exemption from payment of the electric utility's energy efficiency/peak demand reduction rider.

☐ An exemption from payment of the electric utility's energy efficiency/peak demand reduction rider for ____ months (not to exceed 24 months). (Attach calculations showing how this time period was determined.)

OR

☐ A commitment payment valued at no more than $_____. (Attach documentation and calculations showing how this payment amount was determined.)

OR

☐ Ongoing exemption from payment of the electric utility's energy efficiency/peak demand reduction rider for an initial period of 24 months because this program is part of an ongoing efficiency program that is practiced by our organization. (Attach documentation that establishes your organization's ongoing efficiency program. In order to continue the exemption beyond the initial 24 month period your organization will need to provide a future application establishing additional energy savings and the continuance of the organization's energy efficiency program.)

Section 6: Cost Effectiveness

The program is cost effective because it has a benefit/cost ratio greater than 1 using the (choose which applies):

☐ Total Resource Cost (TRC) Test. The calculated TRC value is: _____ (Continue to Subsection 1, then skip Subsection 2)

☒ Utility Cost Test (UCT) . The calculated UCT value is: 5.60 (Skip to Subsection 2.)

Subsection 1: TRC Test Used (please fill in all blanks).

The TRC value of the program is calculated by dividing the value of our avoided supply costs (generation capacity, energy, and any transmission or distribution) by the sum of our program overhead and installation costs and any incremental measure costs paid by either the customer or the electric utility.

The electric utility's avoided supply costs were _____.

Our program costs were _____.

The utility's incremental measure costs were _____.

Subsection 2: UCT Used (please fill in all blanks).

We calculated the UCT value of our program by dividing the value of our avoided supply costs (capacity and energy) by the costs to our electric utility (including administrative costs and incentives paid or rider exemption costs) to obtain our commitment.

Our avoided supply costs were $ 42,082.92

The utility's program costs were $ 25,832.65

The utility's incentive costs/rebate costs were $ 6,743.21.

Section 7: Additional Information

Please attach the following supporting documentation to this application:

- Narrative description of your program including, but not limited to, make, model, and year of any installed and replaced equipment.

  See Attachment 1 - Self Direct Project Overview and Commitment for a description of the project. See Attachment 6 – Supporting Documentation, for the specifications of the replacement equipment work papers that provide all methodologies, protocols, and practices used in this application for custom measures, as needed. Due to the length of time since the equipment replacement, the make, model and year of the replaced equipment is not available.

- A copy of the formal declaration or agreement that commits your program to the electric utility, including:

  1) any confidentiality requirements associated with the agreement;

     See Attachment 2 – Self Direct Program Project Blank Application including Rules and Requirements. All confidentially requirements are pursuant to the Retrospective Projects/Rules and Requirements that are part of the signed application which is provided as Confidential and Proprietary Attachment 3 – Self Direct Program Project Completed Application.)

  2) a description of any consequences of noncompliance with the terms of the commitment;

     See Attachment 2 – Self Direct Program Project Blank Application including Rules and Requirements. All consequences of noncompliance are pursuant to the Retrospective Projects/Rules and Requirements that are part of the signed application which is provided as Confidential and Proprietary Attachment 3 – Self Direct Program Project Completed Application.

  3) a description of coordination requirements between the customer and the electric utility with regard to peak demand reduction;

     None required because the resources committed are permanent installations that reduce demand through increased efficiency during the Company's peak summer demand period generally defined as May through September and do not require specific coordination and communication to provide demand reduction capabilities to the Company.

4) permission by the customer to the electric utility and Commission staff and consultants to measure and verify energy savings and/or peak-demand reductions resulting from your program; and,

   See Attachment 2 – Self Direct Program Blank Application including Rules and Requirements granting such permission pursuant to the Retrospective Projects/Rules and Requirements that are part of the signed application which is provided as Confidential and Proprietary Attachment 3 – Self Direct Program Project Completed Application.

5) a commitment by you to provide an annual report on your energy savings and electric utility peak-demand reductions achieved.

   See Attachment 1 - Self Direct Project Overview and Commitment for the commitment to comply with any information and compliance reporting requirements imposed by rule or as part of the approval of this arrangement by the Public Utilities Commission of Ohio.

- A description of all methodologies, protocols, and practices used or proposed to be used in measuring and verifying program results. Additionally, identify and explain all deviations from any program measurement and verification guidelines that may be published by the Commission.

  The Company applies the same methodologies, protocols, and practices to Self Direct Program retrospective projects that are screened and submitted for approval as it does to prospective projects submitted through its Prescriptive and Custom Programs. The Commission has not published a technical reference manual for use by the Company so deviations can not be identified. The project submitted is a custom project and energy savings are determined as described in Confidential and Proprietary Attachment 5 - Self Direct Program Project Calculation, Attachment 6 – Supporting Documentation for custom measures work papers that provide all methodologies, protocols, and practices used in this application for custom measures, as needed.

Ohio | Public Utilities Commission

Application to Commit Energy Efficiency/Peak Demand Reduction Programs (Mercantile Customers Only)

Case No.: 19-1628-EL-EEC

State of Ohio :

Nigma Mustafa, Affiant, being duly sworn according to law, deposes and says that:

1. I am the duly authorized representative of:

   DNV GL Energy Services USA Inc. agent of Ohio Power

2. I have personally examined all the information contained in the foregoing application, including any exhibits and attachments. Based upon my examination and inquiry of those persons immediately responsible for obtaining the information contained in the application, I believe that the information is true, accurate and complete.

Nigma Energy Engineer
Signature of Affiant & Title

Sworn and subscribed before me this 11 day of October, 2019 Month/Year

Linda M. Schmidt
Signature of official administering oath

LINDA M. SCHMIDT
Print Name and Title

My commission expires on 7-31-2022

NOTARIAL SEAL STATE OF OHIO

LINDA M. SCHMIDT
Notary Public, State of Ohio
My Commission Expires 7-31-2022

AEP OHIO
A unit of American Electric Power

Self Direct Project Overview & Commitment

The Public Utility Commission of Ohio (PUCO) will soon review your application for participation in AEP Ohio's Energy Efficiency/Peak Demand Response program. Based on your submitted project, please select by initialing one of the two options below, sign and fax to 877-607-0740.

Customer Name	GERKEN ASPHALT PLANT	
Project Number	AEP-19-25489	
Customer Premise Address	310 QUARRY DR REAR, BLUFFTON, OH 45817	
Customer Mailing Address	9072 County Road 424, Napoleon, OH 43545	
Date Received	4/3/2019	
Project Installation Date	3/15/2019	
Annual kWh Reduction	128,442	
Total Project Cost	$25,062.00	
Unadjusted Energy Efficiency Credit (EEC) Calculation	$8,990.94	
Simple Payback (yrs)	0.4	
Utility Cost Test (UCT) for EEC	5.60	
Utility Cost Test (UCT) for Exemption	0.01	
		Please Choose One Option Below and Initial
Self Direct EEC: 75%	$6,743.21	[X] Initial: AJK
EE/PDR Rider Exemption	12 Months (with possible extension up to 144 months after PUCO Approval)	[ ] Initial:

Note: *This is a one time selection. By selecting EEC, the customer will receive payment in the amount stated above. Selection of EE/PDR rider exemption, will result in the customer not being eligible to participate in any other energy efficiency programs offered by AEP Ohio during the period of exemption. In addition, the term of EE/PDR rider exemption is subject to ongoing review for compliance and could be changed by the PUCO.*

If EEC has been selected, will the Energy Efficiency Funds selected help you move forward with other energy efficiency projects? ✓ YES ____ NO

Note: Exemptions for periods beyond 24 months are subject to look-back or true-up adjustments every year to ensure that the exemption accurately reflects the EEDR savings. Applicants must file for renewal for any exemption beyond 12 months.

Project Overview:

The Self Direct (Custom) project that the above has completed and applied is as follows.
Install VFD on 300-hp process exhaust fan motor

The documentation that was included with the application proved that the energy measures applied for were purchased and installed.

By signing this document, the Mercantile customer affirms its intention to commit and integrate the above listed energy efficiency resources into the utility's peak demand reduction, demand response, and energy efficiency programs. By signing, the Mercantile customer also agrees to serve as a joint applicant in any filings necessary to secure approval of this arrangement by the Public Utilities Commission of Ohio, and comply with any information and compliance reporting requirements imposed by rule or as part of that approval.

Ohio Power Company

By: _____

Title: Manager

Date: 09/03/2019

GERKEN ASPHALT PLANT

By: Andrew J Kepley

Title: Energy Manager

Date: 8/28/2019

Application Guidelines

Final Applications must be submitted before November 16, 2018 in order to qualify for incentives identified in this application.

Step 1. Verify Eligibility

- Customer must have a valid AEP Ohio account.
- Equipment/measure must be installed at facilities served by the AEP Ohio account.
- Project must produce permanent reduction in electrical energy use (kWh).
- All installed equipment must meet or exceed the specifications in the application.
- Please see Efficient Products for Business, Process Efficiency and New Construction Terms and Conditions or Self-Direct Terms and Conditions for program rules and regulations.

Step 2. Complete Applicant Information

- All fields in customer and project information sections must be completed.
- Contractor information must be completed if project is not self-performed.

Step 3. Complete the Incentive Worksheet(s)

- Find and read specifications related to the project.
- Choose the incentive category on the worksheet based on installed equipment and specifications.
- Complete all fields (fixture description, operating hours, etc.) on the related worksheet.

Step 4. Sign Customer Agreement

- Read the Terms and Conditions before signing and submitting the application.
- Sign Pre-Approval Agreement and submit the application to reserve funds.
- Sign Final Application Agreement and submit the application after the project is completed to receive funds.
- Complete Third Party Payment Release Authorization ONLY if incentive payment is to be paid to an entity other than AEP Ohio customer listed on the Applicant Information page.

Step 5. Submit Pre-Approval Application[1]

(For Self-Direct applications, skip to Step 6)

- Submitting a Pre-Approval Application to determine qualification and reserve program funds for a project is strongly recommended.
- All process efficiency projects require pre-approval.
- Complete all fields in Pre-Approval Agreement.
- Pre-Approval Application must be submitted with:
  - Proposed scope of work (type and quantity of old and new equipment must be listed)
  - Specification sheets for all proposed equipment
  - W-9 form
- Submit application via email, fax or mail.
- An inspection may be required during application review; applicants requiring inspection will be contacted for scheduling.

Step 6. Submit Final Application

- Complete all fields for Final Application Agreement.
- Update the application if measures/equipment differs from pre-application.
- Final Application must be submitted with:
  - Dated and itemized material invoice
  - External labor invoice (if applicable)
  - If Pre-Approval Application was not submitted, include the documents listed on Step 5
- Submit application via email, fax or mail.
- An inspection may be required during application review; applicants requiring inspection will be contacted for scheduling.
- Self-Direct applications require additional steps. Please see the Self-Direct Terms and Conditions for details.

AEP Ohio Business Incentives Program
445 Hutchinson Avenue, Suite 300
Columbus, Ohio 43235
877-541-3048 | aepohiosolutions@clearesult.com
Visit our website at AEPohio.com/solutions

[1]A Pre-Approval Application is not a guarantee of an incentive; the actual incentive will be based on the energy savings and equipment installed as determined in the Final Application. Funds are reserved for 90 days, unless an applicant is granted an extension. The program team reserves the right to contact the customer before the reservation expiration date to ensure that the project is moving forward. If the project is not underway, the reservation may be cancelled. Reserved funds are not transferable to other projects, facilities and/or customers. A waiting list will be established when funds become fully subscribed.

Application Checklist

AEP OHIO
An AEP Company

Pre-Approval

- ☐ Completed Applicant Information
- ☐ Estimated Total Project Cost
- ☐ Estimated Completion Date
- ☐ Completed Incentives Requested Section of Application
- ☐ Applicable Incentive Worksheets Completed
- ☐ Completed and Signed Customer Agreement
- ☐ Equipment Specifications
- ☐ Proposed Scope of Work
- ☐ W-9 Form (Business Name Must Match Line 1 or 2 on the Form)

Final Application Only (Without Pre-Approval)

- ☐ Completed Applicant Information
- ☐ Completed Incentives Requested Section of Application
- ☐ Applicable Incentive Worksheets Completed
- ☐ Total Project Cost
- ☐ Completion date
- ☐ Completed and Signed Customer Agreement
- ☐ Completed Third-Party Payment Release Authorization (optional)
- ☐ Itemized Invoices
- ☐ Equipment Specifications
- ☐ Scope of Work
- ☐ W-9 Form (Business Name Must Match Line 1 or 2 on the Form)

Final Application (With Pre-Approval)

- ☐ Completed Applicant Information
- ☐ Assigned Project Number on Signature Page
- ☐ Total Project Cost
- ☐ Project Completion Date
- ☐ Completed and Signed Final Payment Agreement
- ☐ Completed Third-Party Payment Release Authorization (optional)
- ☐ Installed Equipment Specifications (if there were changes from pre)
- ☐ Itemized Invoices
- ☐ Updated Scope of Work (if there were changes from pre)
- ☐ Applicable Incentive Worksheets (if there were changes from pre)

AEP OHIO
An AEP Company

Applicant Information

AEP Application Number AEP - _ _ - _ _ _ _ _

Application Type (Select One)

CUSTOMER INFORMATION

Business Name _____

Name as It Appears on Utility Bill _____

How many AEP Ohio Accounts are at the Project Site? _____

AEP Ohio Account Numbers for this Project[1] _____ _____ _____

Taxpayer ID _____ - _____ W-9 Tax Status (Select One)

MAILING ADDRESS - WHERE CHECK WILL BE SENT

Contact Name _____ Contact Title _____

Mailing Address _____ City _____ State OH Zip _____

Phone _____ Ext. _____ Contact Email _____

How Did You Hear About the Program? (Select One) AEP OH Energy Advisor _____

PROJECT INFORMATION

Project Name (if applicable) _____

☐ Check if mailing address and project site address are the same.

Project Site Address _____ City _____ State OH Zip _____

Building Type (Select One) Shift (Select One)

Annual Operating Hours _____ Building Area (sq. ft.) _____

Construction Type (Select One) Does the facility have a data center? (Select One)

[1]Please only enter the first eleven digits of the account number.

Applicant Information

AEP OHIO
An AEP Company

CONTRACTOR INFORMATION

Company Name _____

Contact Name _____ Title of Contact _____

Mailing Address _____ City _____ State OH Zip _____

Phone _____ Ext. _____ Contact Email _____

PRIMARY CUSTOMER CONTACT INFORMATION

Contact Name _____ Title of Contact _____

Phone _____ Ext. _____ Contact Email _____

Who should we contact with questions about the application? ❒ Customer ❒ Contractor

Incentive Summary Table

INCENTIVE CATEGORY	TOTAL INCENTIVES
LIGHTING	
HVAC	
MOTORS & DRIVES	
COMPRESSED AIR	
REFRIGERATION/FOOD SERVICE	
AGRICULTURE	
MISCELLANEOUS	
PROCESS EFFICIENCY	
NC LIGHTING (SELF-DIRECT ONLY)	
TOTAL INCENTIVES	

AEP Application Number AEP - _ _ - _ _ _ _ _

Customer Agreement

APPLICATION AGREEMENT

By signing this document, I agree to program requirements outlined in the measure specifications, Terms and Conditions for the applicable program and Final Application Agreement. As an eligible customer, I verify the information is correct and request consideration for participation under this program. Furthermore, I concur that I meet all eligibility criteria in order to receive payment under this program.

Link to Efficient Products for Business/Process Efficiency Terms and Conditions, and Final Application Agreement

Link to Self-Direct Terms and Conditions, and Final Application Agreement

☐ **Pre-Application** ☐ **Final-Application**

Project Completion Year (Select One) _____

Self-Direct _____

Project Completion Date _____

Total Project Cost _____

Total Requested Incentive[1] _____

Total Self-Direct Requested Incentive[2] _____

Print Name _____

Date _____

AEP Ohio Customer Signature _____

PRINT APPLICATION

[1]Incentives have a threshold of 50% of the project cost and total incentives paid to a threshold of $25,000 and Bid4Efficiency above that.
[2]Self-Direct incentives are 75% of Total Requested Incentive, after 50% of the project cost threshold and tiering is applied.

Third Party Payment Release

An AEP Company

THIRD PARTY PAYMENT RELEASE AUTHORIZATION (NOT APPLICABLE TO SELF-DIRECT)

Complete this section ONLY if incentive payment is to be paid to an entity other than the AEP Ohio customer.

Make checks payable to: Company/Individual _____

Mailing Address _____ City_____ State OH Zip_____

Phone _____ Ext. _____

Taxpayer ID of 3rd Party _____ - _____ W-9 Tax Status _

By signing this document, I authorize the payment of the incentive to the third party named above and understand that I will not receive the incentive payment from AEP Ohio. I also understand that my release of the payment to a third party does not exempt me from the program requirements outlined in the measure specifications, Terms and Conditions, and Final Application Agreement.

Print Name	Date	AEP Ohio Customer Signature
_____	_____	_____

Product data sheet
Characteristics

ATV71HC20N4
variable speed drive ATV71 - 200kW-300HP - 480V - EMC filter-graphic terminal

Product availability : Stock - Normally stocked in distribution facility

Price* : 23,096.19 USD

Main

Range of product	Altivar 71
Product or component type	Variable speed drive
Product specific application	Complex, high-power machines
Component name	ATV71
Motor power kW	200 kWat 380...480 V 3 phases
Motor power hp	300 hpat 380...480 V 3 phases
Motor cable length	<= 328.08 ft (100 m) Shielded cable <= 656.17 ft (200 m) Unshielded cable
Power supply voltage	380...480 V (- 15...10 %)
Phase	3 phases
Line current	286 Afor 480 V 3 phases 200 kW / 300 hp 357 Afor 380 V 3 phases 200 kW / 300 hp
EMC filter	Integrated
Assembly style	With heat sink
Variant	Reinforced version
Apparent power	235 kVAat 380 V 3 phases 200 kW / 300 hp
Prospective line Isc	50 kA, 3 phases
Nominal output current	387 Aat 2.5 kHz 380 V 3 phases 200 kW / 300 hp 387 Aat 2.5 kHz 460 V 3 phases 200 kW / 300 hp
Maximum transient current	580 Afor 60 s 3 phases 200 kW / 300 hp 638 Afor 2 s 3 phases 200 kW / 300 hp
Output frequency	0.1...500 Hz
Nominal switching frequency	2.5 kHz
Switching frequency	2.5...8 kHz adjustable 2.5...8 kHz with derating factor
Asynchronous motor control profile	ENA (Energy adaptation) system for unbalanced loads Flux vector control (FVC) with sensor (current vector) Sensorless flux vector control (SFVC) (voltage or current vector)

Disclaimer: This documentation is not intended as a substitute for and is not to be used for determining suitability or reliability of these products for specific user applications

	Voltage/frequency ratio (2 or 5 points)
Type of polarization	No impedance Modbus

Complementary

Product destination	Asynchronous motors Synchronous motors
Power supply voltage limits	323...528 V
Power supply frequency	50...60 Hz (- 5...5 %)
Power supply frequency limits	47.5...63 Hz
Speed range	1...100 asynchronous motor in open-loop mode, without speed feedback 1...50 synchronous motor in open-loop mode, without speed feedback 1...1000 asynchronous motor in closed-loop mode with encoder feedback
Speed accuracy	+/- 0.01 % of nominal speed 0.2 Tn to Tn torque variation in closed-loop mode with encoder feedback +/- 10 % of nominal slip 0.2 Tn to Tn torque variation without speed feedback
Torque accuracy	+/- 15 % in open-loop mode, without speed feedback +/- 5 % in closed-loop mode with encoder feedback
Transient overtorque	220 % of nominal motor torque +/- 10 %for 2 s 170 % of nominal motor torque +/- 10 %for 60 s every 10 minutes
Braking torque	<= 150 % with braking or hoist resistor 30 % without braking resistor
Synchronous motor control profile	Vector control without speed feedback
Regulation loop	Adjustable PI regulator
Motor slip compensation	Adjustable Automatic whatever the load Not available in voltage/frequency ratio (2 or 5 points) Suppressable
Diagnostic	1 LED red presence of drive voltage
Output voltage	<= power supply voltage
Insulation	Electrical between power and control
Type of cable for mounting in an enclosure	With a NEMA Type1 kit: 3-strand UL 508 cableat 104 °F (40 °C), copper 75 °C PVC With an IP21 or an IP31 kit: 3-strand IEC cableat 104 °F (40 °C), copper 70 °C PVC Without mounting kit: 1-strand IEC cableat 113 °F (45 °C), copper 70 °C PVC Without mounting kit: 1-strand IEC cableat 113 °F (45 °C), copper 90 °C XLPE/EPR
Electrical connection	AI1-/AI1+, AI2, AO1, R1A, R1B, R1C, R2A, R2B, LI1...LI6, PWR terminal 2.5 mm² / AWG 14 L1/R, L2/S, L3/T, U/T1, V/T2, W/T3 terminal 4 x 185 mm² PC/-, PA/+ terminal 4 x 185 mm²
Tightening torque	L1/R, L2/S, L3/T, U/T1, V/T2, W/T3 362.83 lbf.in (41 N.m) / 360 lb.in PC/-, PA/+ 362.83 lbf.in (41 N.m) / 360 lb.in AI1-/AI1+, AI2, AO1, R1A, R1B, R1C, R2A, R2B, LI1...LI6, PWR 5.31 lbf.in (0.6 N.m)
Supply	Internal supply for reference potentiometer (1 to 10 kOhm), 10.5 V DC +/- 5 %, <= 10 mAfor overload and short-circuit protection Internal supply, 24 V DC, voltage limits 21...27 V, <= 200 mAfor overload and short-circuit protection
Analogue input number	2
Analogue input type	AI1-/AI1+ bipolar differential voltage +/- 10 V DC, input voltage 24 V max, resolution 11 bits + sign AI2 software-configurable current 0...20 mA, impedance 242 Ohm, resolution 11 bits AI2 software-configurable voltage 0...10 V DC, input voltage 24 V max, impedance 30000 Ohm, resolution 11 bits
Input sampling time	AI1-/AI1+ 2 ms, +/- 0.5 ms analog input(s) AI2 2 ms, +/- 0.5 ms analog input(s) LI1...LI5 2 ms, +/- 0.5 ms discrete input(s) LI6 (if configured as logic input) 2 ms, +/- 0.5 ms discrete input(s)
Response time	<= 100 ms in STO (Safe Torque Off) AO1 2 ms, tolerance +/- 0.5 ms analog output(s) R1A, R1B, R1C 7 ms, tolerance +/- 0.5 ms discrete output(s) R2A, R2B 7 ms, tolerance +/- 0.5 ms discrete output(s)
Absolute accuracy precision	AI1-/AI1+ +/- 0.6 % for a temperature variation 60 °C AI2 +/- 0.6 % for a temperature variation 60 °C AO1 +/- 1 % for a temperature variation 60 °C
Linearity error	AI1-/AI1+, AI2 +/- 0.15 % of maximum value AO1 +/- 0.2 %
Analogue output number	1
Analogue output type	AO1 software-configurable logic output 10 V 20 mA

	AO1 software-configurable current 0...20 mA, impedance 500 Ohm, resolution 10 bits AO1 software-configurable voltage 0...10 V DC, impedance 470 Ohm, resolution 10 bits
Discrete output number	2
Discrete output type	R1A, R1B, R1C configurable relay logic NO/NC, electrical durability 100000 cycles R2A, R2B configurable relay logic NO, electrical durability 100000 cycles
Minimum switching current	Configurable relay logic 3 mAat 24 V DC
Maximum switching current	R1, R2 on resistive load, 5 Aat 250 V AC, cos phi = 1, R1, R2 on resistive load, 5 Aat 30 V DC, cos phi = 1, R1, R2 on inductive load, 2 Aat 250 V AC, cos phi = 0.4, R1, R2 on inductive load, 2 Aat 30 V DC, cos phi = 0.4,
Discrete input number	7
Discrete input type	LI6: switch-configurable 24 V DC with level 1 PLC, impedance: 3500 Ohm PWR: safety input 24 V DC, impedance: 1500 Ohm conforming to ISO 13849-1 level d LI1...LI5: programmable 24 V DC with level 1 PLC, impedance: 3500 Ohm LI6: switch-configurable PTC probe 0...6, impedance: 1500 Ohm
Discrete input logic	LI1...LI5 positive logic (source), < 5 V (state 0), > 11 V (state 0) LI1...LI5 negative logic (sink), > 16 V (state 0), < 10 V (state 0) LI6 (if configured as logic input) positive logic (source), < 5 V (state 0), > 11 V (state 0) LI6 (if configured as logic input) negative logic (sink), > 16 V (state 0), < 10 V (state 0)
Acceleration and deceleration ramps	Automatic adaptation of ramp if braking capacity exceeded, by using resistor Linear adjustable separately from 0.01 to 9000 s S, U or customized
Braking to standstill	By DC injection
Protection type	Drive against exceeding limit speed Drive against input phase loss Drive break on the control circuit Drive input phase breaks Drive line supply overvoltage Drive line supply undervoltage Drive overcurrent between output phases and earth Drive overheating protection Drive overvoltages on the DC bus Drive short-circuit between motor phases Drive thermal protection Motor motor phase break Motor power removal Motor thermal protection
Insulation resistance	> 1 mOhm at 500 V DC for 1 minute to earth
Frequency resolution	Analog input 0.024/50 Hz Display unit 0.1 Hz
Communication port protocol	CANopen Modbus
Connector type	1 RJ45 Modbus on front face 1 RJ45 Modbus on terminal Male SUB-D 9 on RJ45 CANopen
Physical interface	2-wire RS 485 Modbus
Transmission frame	RTU Modbus
Transmission rate	20 kbps, 50 kbps, 125 kbps, 250 kbps, 500 kbps, 1 Mbps CANopen 4800 bps, 9600 bps, 19200 bps, 38.4 Kbps Modbus on terminal 9600 bps, 19200 bps Modbus on front face
Data format	8 bits, 1 stop, even parity Modbus on front face 8 bits, odd even or no configurable parity Modbus on terminal
Number of addresses	1...247 Modbus 1...127 CANopen
Method of access	Slave CANopen
Marking	CE
Operating position	Vertical +/- 10 degree
Height	46.85 in (1190 mm)
Depth	14.84 in (377 mm)
Width	23.43 in (595 mm)
Product weight	456.36 lb(US) (207 kg)
Functionality	Full
Specific application	Other applications

Option card	CC-Link communication card Controller inside programmable card DeviceNet communication card Ethernet/IP communication card Fipio communication card I/O extension card Interbus-S communication card Interface card for encoder Modbus Plus communication card Modbus TCP communication card Modbus/Uni-Telway communication card Overhead crane card Profibus DP communication card Profibus DP V1 communication card

Environment

Noise level	77 dB conforming to 86/188/EEC
Dielectric strength	3535 V DC between earth and power terminals 5092 V DC between control and power terminals
Electromagnetic compatibility	Conducted radio-frequency immunity test conforming to IEC 61000-4-6 level 3 Electrical fast transient/burst immunity test conforming to IEC 61000-4-4 level 4 Electrostatic discharge immunity test conforming to IEC 61000-4-2 level 3 Radiated radio-frequency electromagnetic field immunity test conforming to IEC 61000-4-3 level 3 Voltage dips and interruptions immunity test conforming to IEC 61000-4-11 1.2/50 µs - 8/20 µs surge immunity test conforming to IEC 61000-4-5 level 3
Standards	EN 55011 class A group 2 EN 61800-3 environments 1 category C3 EN 61800-3 environments 2 category C3 EN/IEC 61800-3 EN/IEC 61800-5-1 IEC 60721-3-3 class 3C2 UL Type 1
Product certifications	CSA C-Tick GOST NOM 117 UL
Pollution degree	2 conforming to EN/IEC 61800-5-1 3 conforming to UL 840
IP degree of protection	IP20
Vibration resistance	1.5 mm peak to peak (f = 3...10 Hz) conforming to EN/IEC 60068-2-6 0.6 gn (f = 10...200 Hz) conforming to EN/IEC 60068-2-6
Shock resistance	4 gn 11 ms conforming to EN/IEC 60068-2-27
Relative humidity	5...95 % without condensation conforming to IEC 60068-2-3 5...95 % without dripping water conforming to IEC 60068-2-3
Ambient air temperature for operation	14...122 °F (-10...50 °C) without derating
Ambient air temperature for storage	-13...158 °F (-25...70 °C)
Operating altitude	<= 3280.84 ft (1000 m) without derating 3280.84...9842.52 ft (1000...3000 m) with current derating 1 % per 100 m

Ordering and shipping details

Category	22133 - ATV71 200 THRU 450HP DRIVES
Discount Schedule	CP4C
GTIN	00785901575023
Nbr. of units in pkg.	1
Package weight(Lbs)	424.60000000000002
Returnability	Y
Country of origin	IN

Offer Sustainability

Sustainable offer status	Green Premium product
RoHS (date code: YYWW)	Compliant - since 1002 - Schneider Electric declaration of conformity

	Schneider Electric declaration of conformity
REACh	Reference not containing SVHC above the threshold Reference not containing SVHC above the threshold
Product environmental profile	Available End of Life Information
Product end of life instructions	Need no specific recycling operations
California proposition 65	WARNING: This product can expose you to chemicals including:
- - - - - - - Substance 1	Lead and lead compounds, which is known to the State of California to cause cancer and birth defects or other reproductive harm.
- - - - - - - Substance 2	Bisphenol A (BPA), which is known to the State of California to cause birth defects or other reproductive harm.
- - - - - - - More information	For more information go to www.p65warnings.ca.gov

Contractual warranty

Warranty period	18 months

Product data sheet
Dimensions Drawings

ATV71HC20N4

UL Type 1/IP 20 Drives

Dimensions with or without 1 Option Card (1)

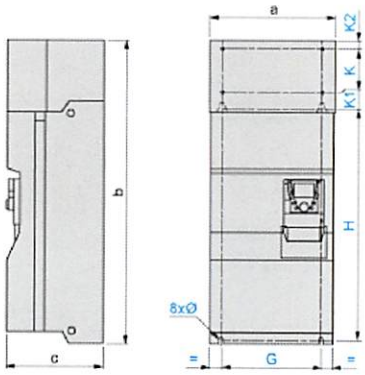

Dimensions in mm

a	b	c	G	H	K	K1	K2	Ø
595	1190	377	540	920	150	75	30	11.5

Dimensions in in.

a	b	c	G	H	K	K1	K2	Ø
23.43	46.85	14.84	21.26	36.22	5.90	2.95	1.18	0.45

(1) Option cards: I/O extension cards, communication cards or "Controller Inside" programmable card.

Dimensions with 2 Option Cards (1)

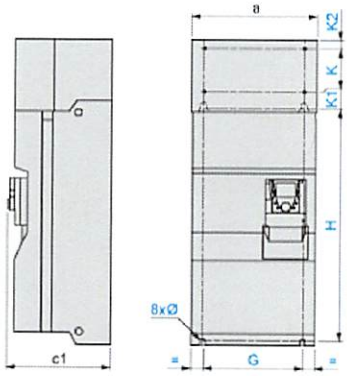

Dimensions in mm

a	c1	G	H	K	K1	K2	Ø
595	392	540	920	150	75	30	11.5

Dimensions in in.

a	c1	G	H	K	K1	K2	Ø
23.43	15.43	21.26	36.22	5.90	2.95	1.18	0.45

(1) Option cards: I/O extension cards, communication cards or "Controller Inside" programmable card.

Drive with Braking Unit VW3A7101

Dimensions with or without 1 Option Card (1)

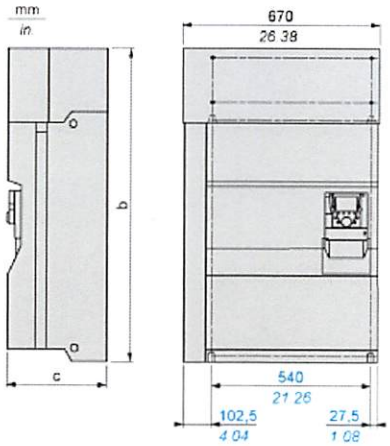

b in mm	c in mm	b in in.	c in in.
1190	377	46.85	14.84

(1) Option cards: I/O extension cards, communication cards or "Controller Inside" programmable card.

Dimensions with 2 Option Cards (1)

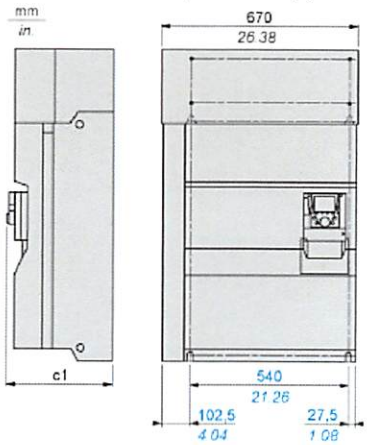

c1 in mm	c1 in in.
392	15.43

(1) Option cards: I/O extension cards, communication cards or "Controller Inside" programmable card.

Product data sheet
Mounting and Clearance

ATV71HC20N4

Mounting Recommendations

Clearance

mm
in.

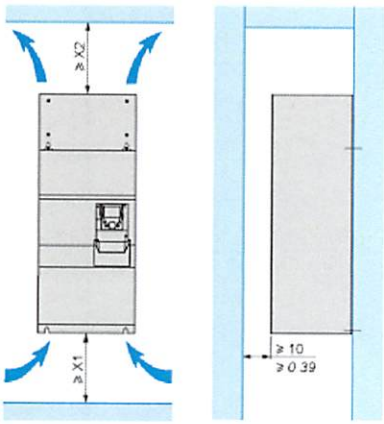

X1 in mm	X2 in mm	X1 in in.	X2 in in.
150	200	5.91	7.87

These drives can be mounted side by side, observing the following mounting recommendations:

mm
in.

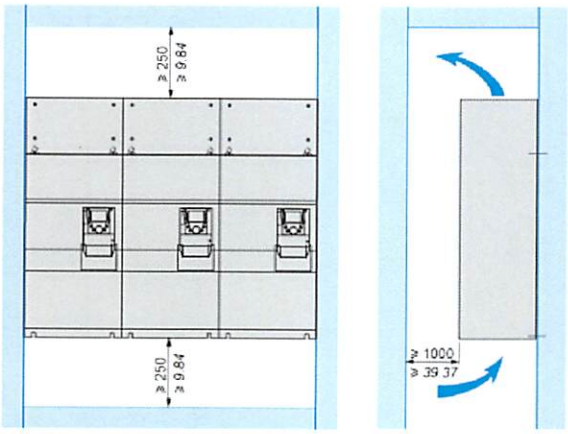

Product data sheet
Mounting and Clearance

ATV71HC20N4

Specific Recommendations for Mounting the Drive in an Enclosure

Ventilation

To ensure proper air circulation in the drive:

- Fit ventilation grilles.
- Ensure that there is sufficient ventilation. If there is not, install a forced ventilation unit with a filter. The openings and/or fans must provide a flow rate at le

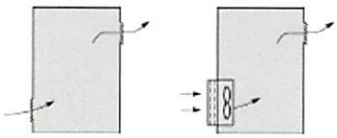

- Use special filters with IP 54 protection.
- Remove the blanking cover from the top of the drive.

Dust and Damp Proof Metal Enclosure (IP 54)

The drive must be mounted in a dust and damp proof enclosure in certain environmental conditions: dust, corrosive gases, high humidity with risk of condensation and dripping water, splashing liquid, etc.

This enables the drive to be used in an enclosure where the maximum internal temperature reaches 50°C.

Product data sheet
Connections and Schema

ATV71HC20N4

Wiring Diagram Conforming to Standards EN 954-1 Category 1, IEC/EN 61508 Capacity SIL1, in Stopping Category 0 According to IEC/EN 60204-1

Three-Phase Power Supply with Upstream Breaking via Contactor

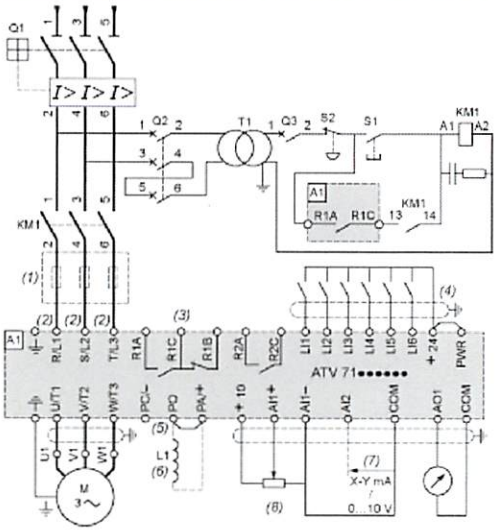

A1	ATV71 drive
KM1	Contactor
L1	DC choke
Q1	Circuit-breaker
Q2	GV2 L rated at twice the nominal primary current of T1
Q3	GB2CB05
S1, S2	XB4 B or XB5 A pushbuttons
T1	100 VA transformer 220 V secondary
(1)	Line choke (three-phase); mandatory for ATV71HC11Y…HC63Y drives (except when a special transformer is used (12-pulse)).
(2)	For ATV71HC40N4 drives combined with a 400 kW motor, ATV71HC50N4 and ATV71HC40Y…HC63Y, refer to the power terminal connections diagrar
(3)	Fault relay contacts. Used for remote signalling of the drive status.
(4)	Connection of the common for the logic inputs depends on the positioning of the SW1 switch. The above diagram shows the internal power supply switc
(5)	There is no PO terminal on ATV71HC11Y…HC63Y drives.
(6)	Optional DC choke for ATV71H•••M3, ATV71HD11M3X…HD45M3X, ATV71•075N4…•D75N4 and ATV71P•••N4Z drives. Connected in place of the stra
(7)	Software-configurable current (0…20 mA) or voltage (0…10 V) analog input.
(8)	Reference potentiometer.

All terminals are located at the bottom of the drive. Fit interference suppressors on all inductive circuits near the drive or connected on the same circuit, such as relays, contactors, solenoid valves, fluorescent lighting, etc.

Product data sheet
Connections and Schema

ATV71HC20N4

Wiring Diagram Conforming to Standards EN 954-1 Category 1, IEC/EN 61508 Capacity SIL1, in Stopping Category 0 According to IEC/EN 60204-1

Three-Phase Power Supply with Downstream Breaking via Switch Disconnector

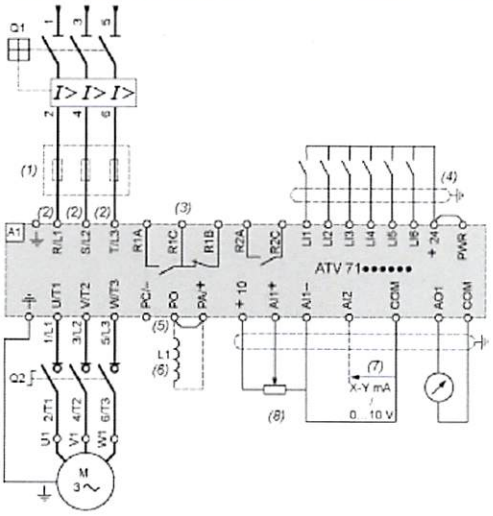

A1	ATV71 drive
L1	DC choke
Q1	Circuit-breaker
Q2	Switch disconnector (Vario)
(1)	Line choke (three-phase), mandatory for ATV71HC11Y...HC63Y drives (except when a special transformer is used (12-pulse)).
(2)	For ATV71HC40N4 drives combined with a 400 kW motor, ATV71HC50N4 and ATV71HC40Y...HC63Y, refer to the power terminal connections diag
(3)	Fault relay contacts. Used for remote signalling of the drive status.
(4)	Connection of the common for the logic inputs depends on the positioning of the SW1 switch. The above diagram shows the internal power supply sv
(5)	There is no PO terminal on ATV71HC11Y...HC63Y drives.
(6)	Optional DC choke for ATV71H•••M3, ATV71HD11M3X...HD45M3X, ATV71•075N4...•D75N4 and ATV71P•••N4Z drives. Connected in place of the
(7)	Software-configurable current (0...20 mA) or voltage (0...10 V) analog input.
(8)	Reference potentiometer.

All terminals are located at the bottom of the drive. Fit interference suppressors on all inductive circuits near the drive or connected on the same circuit, such as relays, contactors, solenoid valves, fluorescent lighting, etc.

Product data sheet
Connections and Schema

ATV71HC20N4

Wiring Diagram Conforming to Standards EN 954-1 Category 3, IEC/EN 61508 Capacity SIL2, in Stopping Category 0 According to IEC/EN 60204-1

Three-Phase Power Supply, Low Inertia Machine, Vertical Movement

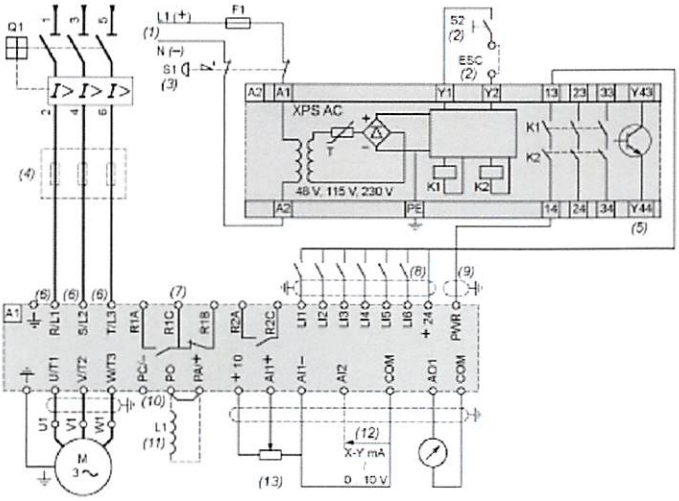

A1	ATV71 drive
A2	Preventa XPS AC safety module for monitoring emergency stops and switches. One safety module can manage the "Power Removal" function for seve
F1	Fuse
L1	DC choke
Q1	Circuit-breaker
S1	Emergency stop button with 2 contacts
S2	XB4 B or XB5 A pushbutton
(1)	Power supply: 24 Vdc or Vac, 48 Vac, 115 Vac, 230 Vac.
(2)	S2: resets XPS AC module on power-up or after an emergency stop. ESC can be used to set external starting conditions.
(3)	Requests freewheel stopping of the movement and activates the "Power Removal" safety function.
(4)	Line choke (three-phase), mandatory for and ATV71HC11Y...HC63Y drives (except when a special transformer is used (12-pulse)).
(5)	The logic output can be used to signal that the machine is in a safe stop state.
(6)	For ATV71HC40N4 drives combined with a 400 kW motor, ATV71HC50N4 and ATV71HC40Y...HC63Y, refer to the power terminal connections diagrai
(7)	Fault relay contacts. Used for remote signalling of the drive status.
(8)	Connection of the common for the logic inputs depends on the positioning of the SW1 switch. The above diagram shows the internal power supply switc
(9)	Standardized coaxial cable, type RG174/U according to MIL-C17 or KX3B according to NF C 93-550, external diameter 2.54 mm /0.09 in., maximum ler
(10)	There is no PO terminal on ATV71HC11Y...HC63Y drives.
(11)	Optional DC choke for ATV71H•••M3, ATV71HD11M3X...HD45M3X, ATV71•075N4...•D75N4 and ATV71P•••N4Z drives. Connected in place of the stra
(12)	Software-configurable current (0...20 mA) or voltage (0...10 V) analog input.
(13)	Reference potentiometer.

All terminals are located at the bottom of the drive. Fit interference suppressors on all inductive circuits near the drive or connected on the same circuit, such as relays, contactors, solenoid valves, fluorescent lighting, etc.

Product data sheet
Connections and Schema

ATV71HC20N4

Wiring Diagram Conforming to Standards EN 954-1 Category 3, IEC/EN 61508 Capacity SIL2, in Stopping Category 1 According to IEC/EN 60204-1

Three-Phase Power Supply, High Inertia Machine

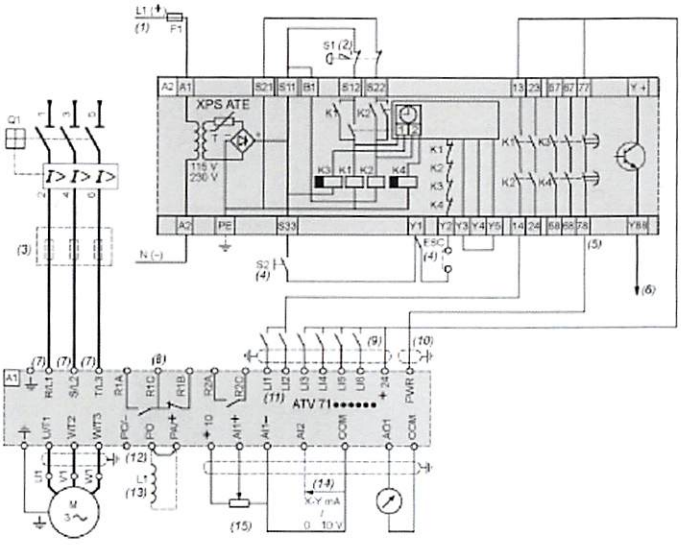

A1	ATV71 drive
A2 (5)	Preventa XPS ATE safety module for monitoring emergency stops and switches. One safety module can manage the "Power Removal" safety functi
F1	Fuse
L1	DC choke
Q1	Circuit-breaker
S1	Emergency stop button with 2 N/C contacts
S2	Run button
(1)	Power supply: 24 Vdc or Vac, 115 Vac, 230 Vac.
(2)	Requests controlled stopping of the movement and activates the "Power Removal" safety function.
(3)	Line choke (three-phase), mandatory for ATV71HC11Y...HC63Y drives (except when a special transformer is used (12-pulse)).
(4)	S2: resets XPS ATE module on power-up or after an emergency stop. ESC can be used to set external starting conditions.
(5)	For stopping times requiring more than 30 seconds in category 1, use a Preventa XPS AV safety module which can provide a maximum time delay c
(6)	The logic output can be used to signal that the machine is in a safe state.
(7)	For ATV71HC40N4 drives combined with a 400 kW motor, ATV71HC50N4 and ATV71HC40Y...HC63Y, refer to the power terminal connections diag
(8)	Fault relay contacts. Used for remote signalling of the drive status.
(9)	Connection of the common for the logic inputs depends on the positioning of the SW1 switch. The above diagram shows the internal power supply s
(10)	Standardized coaxial cable, type RG174/U according to MIL-C17 or KX3B according to NF C 93-550, external diameter 2.54 mm/0.09 in., maximum
(11)	Logic inputs LI1 and LI2 must be assigned to the direction of rotation: LI1 in the forward direction and LI2 in the reverse direction.
(12)	There is no PO terminal on ATV71HC11Y...HC63Y drives.
(13)	Optional DC choke for ATV71H•••M3, ATV71HD11M3X...HD45M3X, ATV71•075N4...•D75N4 and ATV71P•••N4Z drives. Connected in place of the
(14)	Software-configurable current (0...20 mA) or voltage (0...10 V) analog input.
(15)	Reference potentiometer.

All terminals are located at the bottom of the drive. Fit interference suppressors on all inductive circuits near the drive or connected on the same circuit, such as relays, contactors, solenoid valves, fluorescent lighting, etc.

Product data sheet
Performance Curves

ATV71HC20N4

Derating Curves

The derating curves for the drive nominal current (In) depend on the temperature and the switching frequency. For intermediate temperatures (e.g. 55°C), interpolate between 2 curves.

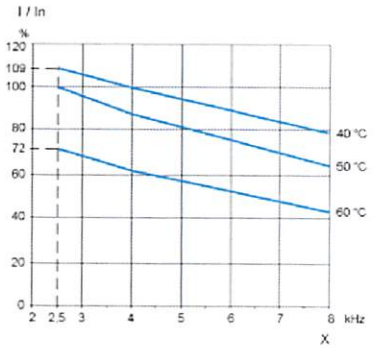

X Switching frequency

This foregoing document was electronically filed with the Public Utilities

Commission of Ohio Docketing Information System on

11/25/2019 4:01:05 PM

in

Case No(s). 19-1628-EL-EEC

Summary: Application -Gerken Asphalt Plant and Ohio Power Company for approval of a special arrangement agreement with a mercantile customer electronically filed by Tanner Wolffram on behalf of Ohio Power Company