Public Utilities
Commission of Ohio

Memo

To: Docketing Division

From: Jill Henry, Rail Specialist, Rail Division

Cc: PUCO Legal Department

Date: 07/12/2019

Re: PUCO Case No. 19-1451-RR-FED- In the Matter of a Request for the Upgrade of Active Warning Devices at the Columbus & Ohio River Railroad Crossing, Thornwood Drive DOT#151-801J in Licking County, Ohio.

On June 21, 2018, the Ohio Rail Development Commission (ORDC) authorized funding for Columbus & Ohio River Railroad (CUOH) to upgrade the lights and gates at Thornwood Drive, DOT#151-801J in Licking County, Ohio. The crossing was surveyed, on December 14, 2017, and found to warrant the upgrades. The electric utility provider for this crossing is AEP Ohio.

The project will be paid for with federal funds and is actual cost. The plans and estimates for the project in the amount of $150,680.00 have been approved. Construction may commence at once. **Staff requests a Finding & Order with completion of the project in nine months.** Staff requests that the following language be incorporated in the Finding & Order:

It is expected that all work necessary for FHWA acceptance of the warning devices will be completed by the in-service due date and that the railroad will be responsible for this work. This work includes, but is not limited to:

- **Any ancillary work to make the warning devices function as designed and visible to the roadway user, and**
- **MUTCD compliance, including minor roadway work if necessary.**

Please serve the following parties of record:

Northeast Region-Genesee & Wyoming
Len Wagner
Senior Vice President
201 N. Penn Street
Punxsutawney, PA 15767

Columbus & Ohio River Railroad
Gene Hensley
Supervisor C&S
47849 Papermill Road
Coshocton, OH 43812

Genesee& Wyoming Railroad Services, Inc.
Jacob Smith
Director of Public Projects
13901 Sutton Park Drive, STE 345
Jacksonville, FL 32224

Ohio Rail Development Commission
Cathy Stout
Safety Manager
1980 West Broad Street
Mail Stop #3140
Columbus, Ohio 43223

City of Heath
Eddie Hunt
Building & Zoning
1287 Hebron Road
Heath, Ohio 43056

Licking County Engineer
Jared Knerr
County Engineer
20 S 2nd Street
Newark, Ohio 43055

AEP Ohio

OHIO RAIL DEVELOPMENT COMMISSION
INTER-OFFICE COMMUNICATION

TO: **Randall Schumacher, Supervisor, Rail Division, PUCO**

FROM: **Cathy Stout, Manager, Safety Section, ORDC**

BY: **Greg Gronbach, Project Manager, Safety Section, ORDC**

SUBJECT: **LIC Thornwood Dr DOT# 151801J PID# 107285**

DATE: **July 12, 2019**

The Public Utilities Commission of Ohio (PUCO) established a diagnostic survey at the subject location on December 14, 2017. The Ohio Rail Development Commission (ORDC) attended the review. The Diagnostic Team recommended the improvement of warning devices to flashing lights and roadway gates. Copies of the diagnostic review form and the plan and estimate are attached.

PE has already been provided by the railroad. ORDC accepts the site plans and estimates as provided. Please issue a construction-only order for the project outlined above. ORDC recommends a nine (9) month construction timeline. This authorization is made with the stipulation and understanding that an approved estimate may contain entries for items or activities that may be cited and found to be ineligible for federal participation during the project audit.

It is expected that all work necessary for FHWA acceptance of the warning devices will be completed by the in-service due date and that the railroad will be responsible for this work. This work includes, but is not limited to:

- any ancillary work to make warning devices function as designed and visible to the roadway user, and
- MUTCD compliance – including minor roadway work if necessary.

Thank you for your assistance with these matters.

Greg Gronbach
Project Manager

Attachment: Diagnostic Review
Letter Agreement
PE Authorization
Plan, Estimate & Material List
Construction Authorization

c: Jill Henry, Rail Division Specialist, PUCO
ORDC Project Manager (file)

OHIO RAIL DEVELOPMENT COMMISSION
Mail Stop #3140, 1980 West Broad Street, Columbus OH 43223
Mike DeWine, Governor • Mark Policinski, ORDC Chairman

July 12, 2019

Len Wagner NE Region
Marty Pohlod MW Region
Genesee & Wyoming/CUOH
201 N. Penn St
Punxsutawney, PA 15767

RE: Construction Authorization
LIC Thornwood Dr DOT# 151801J PID# 107285

Dear Mr. Wagner and Mr. Pohlod:

The plan and estimate dated June 17, 2019, for the referenced project is acceptable. Genesee & Wyoming/CUOH may proceed with the construction of the proposed grade crossing warning system in accordance with the abbreviated plan. Preliminary engineering (PE) and construction costs shall be borne one hundred percent (100%) by ORDC. Construction may include but is not limited to circuitry design, installation of service poles, procurement of materials and signal construction.

Note ODOT Railroad Audit Circular No.4 Subcontracted Costs for Railroads and accordingly provide ORDC with any relevant bid documents and bid tabs pertaining to this project.

This authorization is made with the stipulation and understanding that the approved estimate may contain entries for items or activities that may be cited and found to be ineligible for federal participation during the project audit. Reimbursement of eligible actual cost is limited to $150,680.00 and will be adjusted based on bid tabulations if applicable. Additional costs must be approved in writing by the Ohio Rail Development Commission (ORDC) prior to being incurred. Emergency verbal authorizations by ORDC may be permitted and will be confirmed by ORDC in writing within ten (10) business days of the verbal approval.

This authorization is contingent upon Genesee & Wyoming/CUOH accepting the following instructions:

1. Genesee & Wyoming/CUOH's project foreman will furnish written notification five (5) working days prior to the date work will start at the project site to Greg Gronbach, ORDC, email Gregory.Gronbach@dot.ohio.gov , and to the Public Utilities Commission of Ohio at Jill.henry@puc.state.oh.us. Genesee & Wyoming/CUOH's project foreman will also notify the same of any stops and re-starts of the work activity and of the date work was completed for the project.

2. Genesee & Wyoming/CUOH will arrange for utilities to be located at the project site by the Ohio Utilities Protection Service (OUPS) prior to any construction activities at the

site. Utilities that are not participating members of the service must be contacted directly by Genesee & Wyoming/CUOH.

3. Genesee & Wyoming/CUOH's project foremen will notify Greg Gronbach at 614-745-6760 (telephone) or Gregory.Gronbach@dot.ohio.gov (email) of any changes in the scope of work, cost overruns, material changes, etc. which are not included in the approved plan and estimate and secure approval of same before the work is performed.

4. Open cut of roadways is *not permitted* except in unusual circumstances and must be coordinated with the local highway authority and preapproved by ORDC.

5. Genesee & Wyoming/CUOH will furnish two (2) copies of each partial bill to ORDC. Please find the enclosed ODOT Purchase Order to reference when billing.

6. Genesee & Wyoming/CUOH will furnish two (2) copies of the final all-inclusive bill to ORDC stating the exact dates of starting and completing work, the initial and final dates of construction and location where the accounts may be audited.

7. This installation will include any ancillary work to make the warning devices function as designed and meet MUTCD.

Thank you for your assistance with these matters.

Sincerely,

Greg Gronbach
Project Manager

C: Randall Schumacher, Rail Division Supervisor, PUCO
Jill Henry, Rail Division Specialist, PUCO
Heather Hamilton, ORDC
ORDC (file)

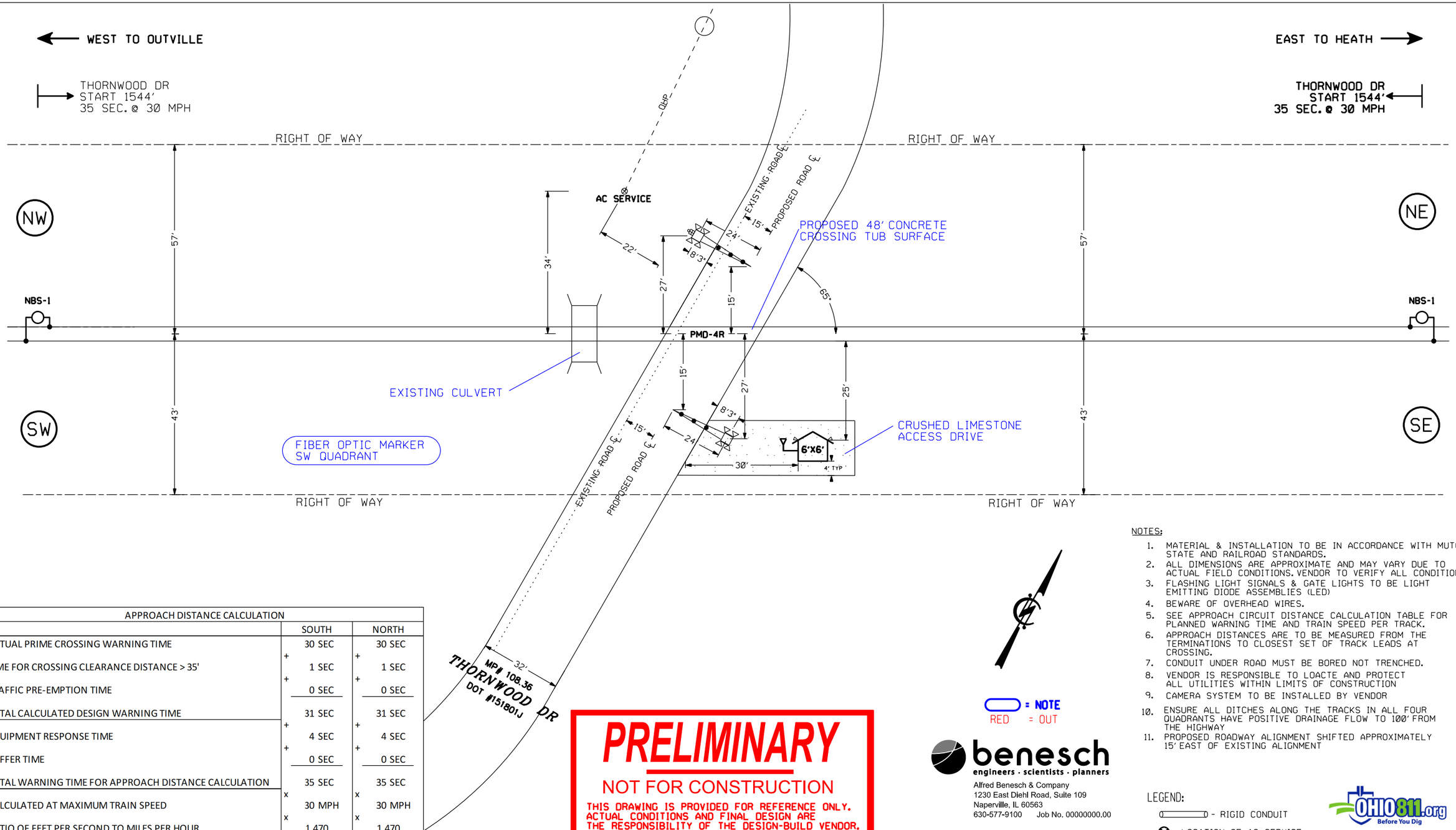

APPROACH DISTANCE CALCULATION		
	SOUTH	NORTH
ACTUAL PRIME CROSSING WARNING TIME	30 SEC	30 SEC
+	+	+
TIME FOR CROSSING CLEARANCE DISTANCE > 35'	1 SEC	1 SEC
+	+	+
TRAFFIC PRE-EMPTION TIME	0 SEC	0 SEC
TOTAL CALCULATED DESIGN WARNING TIME	31 SEC	31 SEC
+	+	+
EQUIPMENT RESPONSE TIME	4 SEC	4 SEC
+	+	+
BUFFER TIME	0 SEC	0 SEC
TOTAL WARNING TIME FOR APPROACH DISTANCE CALCULATION	35 SEC	35 SEC
x	x	x
CALCULATED AT MAXIMUM TRAIN SPEED	30 MPH	30 MPH
x	x	x
RATIO OF FEET PER SECOND TO MILES PER HOUR	1.470	1.470
APPROACH LENGTH (ROUNDED UP TO THE NEXT FOOT)	1544 FEET	1544 FEET

PRELIMINARY

NOT FOR CONSTRUCTION

THIS DRAWING IS PROVIDED FOR REFERENCE ONLY. ACTUAL CONDITIONS AND FINAL DESIGN ARE THE RESPONSIBILITY OF THE DESIGN-BUILD VENDOR.

= NOTE
RED = OUT

benesch
engineers · scientists · planners
Alfred Benesch & Company
1230 East Diehl Road, Suite 109
Naperville, IL 60563
630-577-9100 Job No. 00000000.00

NOTES:

1. MATERIAL & INSTALLATION TO BE IN ACCORDANCE WITH MUTCD, STATE AND RAILROAD STANDARDS.
2. ALL DIMENSIONS ARE APPROXIMATE AND MAY VARY DUE TO ACTUAL FIELD CONDITIONS. VENDOR TO VERIFY ALL CONDITIONS.
3. FLASHING LIGHT SIGNALS & GATE LIGHTS TO BE LIGHT EMITTING DIODE ASSEMBLIES (LED)
4. BEWARE OF OVERHEAD WIRES.
5. SEE APPROACH CIRCUIT DISTANCE CALCULATION TABLE FOR PLANNED WARNING TIME AND TRAIN SPEED PER TRACK.
6. APPROACH DISTANCES ARE TO BE MEASURED FROM THE TERMINATIONS TO CLOSEST SET OF TRACK LEADS AT CROSSING.
7. CONDUIT UNDER ROAD MUST BE BORED NOT TRENCHED.
8. VENDOR IS RESPONSIBLE TO LOACTE AND PROTECT ALL UTILITIES WITHIN LIMITS OF CONSTRUCTION
9. CAMERA SYSTEM TO BE INSTALLED BY VENDOR
10. ENSURE ALL DITCHES ALONG THE TRACKS IN ALL FOUR QUADRANTS HAVE POSITIVE DRAINAGE FLOW TO 100' FROM THE HIGHWAY
11. PROPOSED ROADWAY ALIGNMENT SHIFTED APPROXIMATELY 15' EAST OF EXISTING ALIGNMENT

LEGEND:

- RIGID CONDUIT
- LOCATION OF AC SERVICE

OHIO811.org Before You Dig

"DRAWING NOT TO SCALE"

REVISIONS

THE OPERATION OF THE CIRCUITS AND EQUIPMENT REPRESENTED HEREIN CANNOT BE FULLY CHECKED UNTIL ALL CIRCUITS AND DEVICES ARE CONNECTED TO FORM A COMPLETE SYSTEM, OR AN EFFECTIVE SUBSYSTEM. SUCH SYSTEM OR SUBSYSTEM MUST BE GIVEN COMPLETE CIRCUIT AND OPERATIONAL TESTS BEFORE BEING PLACED IN REGULAR OPERATION.

COLUMBUS AND OHIO RIVER RAILROAD

PROPOSED CROSSING LAYOUT

DRAWN: MJD
DESIGNED: MJD
CHECKED: BPB
DATE: 05/14/19

THORNWOOD DR
HEATH, (LICKING), OHIO
DOT#151801J MILEPOST#108.36

DRAWING NO.
CUOH10836.H01
SHEET 01 OF 01

COLUMBUS & OHIO RIVER RAILROAD

THORNWOOD DRIVE
HEATH, OHIO
DOT# 151 801J MILEPOST# 108.36

INDEX

SHEET	DESCRIPTION
00	TITLE AND INDEX
01	CROSSING TRACK LAYOUT
02	TRACK AND CABLE LAYOUT
03	PMD-4R CIRCUITRY & PROGRAM
04	CROSSING CONTROLLER
05	GATE LIGHTING CIRCUITRY
06	GATE MECH CIRCUITRY
07	DATA RECORDER CIRCUITRY
08	DC POWER DISTRIBUTION
09	SIDE D DETAIL - AC POWER DISTRIBUTION
10	SIDE B DETAIL - TERMINAL BOARD
11	SIDE A DETAIL
12	SIDE C DETAIL
13	
14	
15	
16	
17	
18	
19	
20	
21	
22	
23	
24	
25	
26	
27	
28	
29	
30	

REVISIONS

THE OPERATION OF THE CIRCUITS AND EQUIPMENT REPRESENTED HEREIN CANNOT BE FULLY CHECKED UNTIL ALL CIRCUITS AND DEVICES ARE CONNECTED TO FORM A COMPLETE SYSTEM, OR AN EFFECTIVE SUBSYSTEM. SUCH SYSTEM OR SUBSYSTEM MUST BE GIVEN COMPLETE CIRCUIT AND OPERATIONAL TESTS BEFORE BEING PLACED IN REGULAR OPERATION.

STATE OF OHIO
SCOTT L WERTANS
E-73435
REGISTERED PROFESSIONAL ENGINEER
6/21/19

The Columbus & Ohio River Rail Road Company
47849 Papermill Road
Coshocton, Ohio 43812
740-622-8092

TITLE AND INDEX

COLUMBUS & OHIO RIVER RAILROAD

DRAWN: PRS
DESIGNED: MST
CHECKED: JMW
DATE: 06-17-19

THORNWOOD DRIVE
HEATH, OHIO
DOT# 151 801J MILEPOST# 108.36

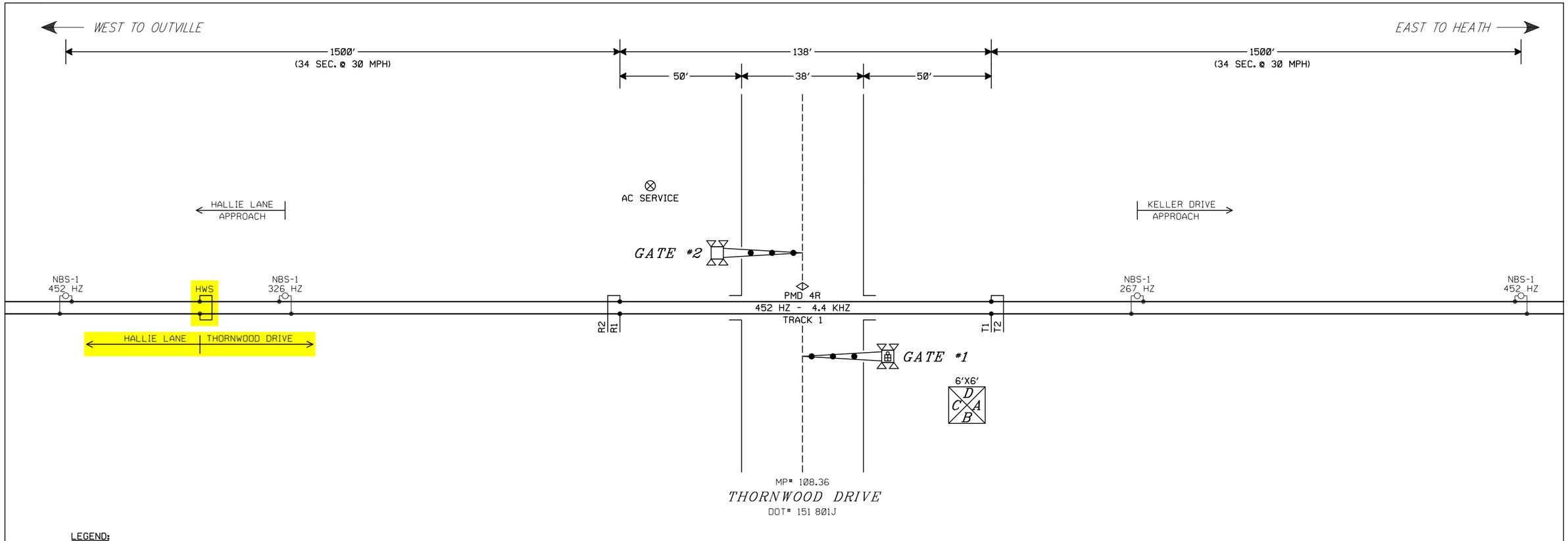

LEGEND:

- -TEST TERMINAL
- -EQUALIZER
- -ARRESTOR TO GROUND
- -TWISTED WIRE 2 TURNS PER FOOT
- -INSULATED NUT

APPROACH DISTANCE CALCULATION	
	TRACK 1
ACTUAL PRIME CROSSING WARNING TIME	30 SEC
TIME FOR CROSSING CLEARANCE DISTANCE @ 35′	+ 0 SEC
TRAFFIC PRE-EMPTION TIME	+ 0 SEC
TOTAL CALCULATED DESIGN WARNING TIME	30 SEC
EQUIPMENT RESPONSE TIME	+ 4 SEC
BUFFER TIME	+ 0 SEC
TOTAL WARNING TIME FOR APPROACH DISTANCE CALCULATION	34 SEC
CALCULATED AT MAXIMUM TRAIN SPEED	× 30 MPH
RATIO OF FEET PER SECOND TO MILES PER HOUR	× 1.47
APPROACH LENGTH (ROUNDED UP TO THE NEXT FOOT)	1500 FEET

NOTES:

1. LAT./LONG. IN DECIMAL DEGREES: 40.031893°, -82.479746°
2. SEE APPROACH CIRCUIT DISTANCE CALCULATION TABLE FOR PLANNED WARNING TIME AND TRAIN SPEED PER TRACK.
3. T1-T2 LEADS ALWAYS CONNECT TO TRACK ON HOUSE SIDE OF CROSSING.
4. APPROACH DISTANCES ARE TO BE MEASURED FROM THE TERMINATIONS TO CLOSEST SET OF TRACK LEADS AT CROSSING.
5. DOUBLE BOND AROUND JOINTS.
6. CONDUIT UNDER ROAD MUST BE BORED NOT TRENCHED.
7. GATE DELAY: 3 SECONDS MINIMUM.
8. MAIN ELECTRICAL PANEL 100A MINUMUM.
9. GATE LENGTHS:
   GATE #1: 24′
   GATE #2: 24′
10. ALL ARRESTORS ARE AIRGAP TYPE ONLY.
11. ORDER & INSTALL (1)-326 HZ NBS-1 TERMINATION SHUNT FOR HALLIE LANE.

YELLOW = OUT

REVISIONS

THE OPERATION OF THE CIRCUITS AND EQUIPMENT REPRESENTED HEREIN CANNOT BE FULLY CHECKED UNTIL ALL CIRCUITS AND DEVICES ARE CONNECTED TO FORM A COMPLETE SYSTEM, OR AN EFFECTIVE SUBSYSTEM. SUCH SYSTEM OR SUBSYSTEM MUST BE GIVEN COMPLETE CIRCUIT AND OPERATIONAL TESTS BEFORE BEING PLACED IN REGULAR OPERATION.

STATE OF OHIO
SCOTT L WERTANS
E-73435
REGISTERED PROFESSIONAL ENGINEER
6/21/19

The Columbus & Ohio River Rail Road Company
47849 Papermill Road
Coshocton, Ohio 43812
740-622-8092

CROSSING TRACK LAYOUT

COLUMBUS & OHIO RIVER RAILROAD

DRAWN: PRS
DESIGNED: MST
CHECKED: JMW
DATE: 06-17-19

THORNWOOD DRIVE
HEATH, OHIO
DOT# 151 801J MILEPOST# 108.36

SHEET 01 OF 12

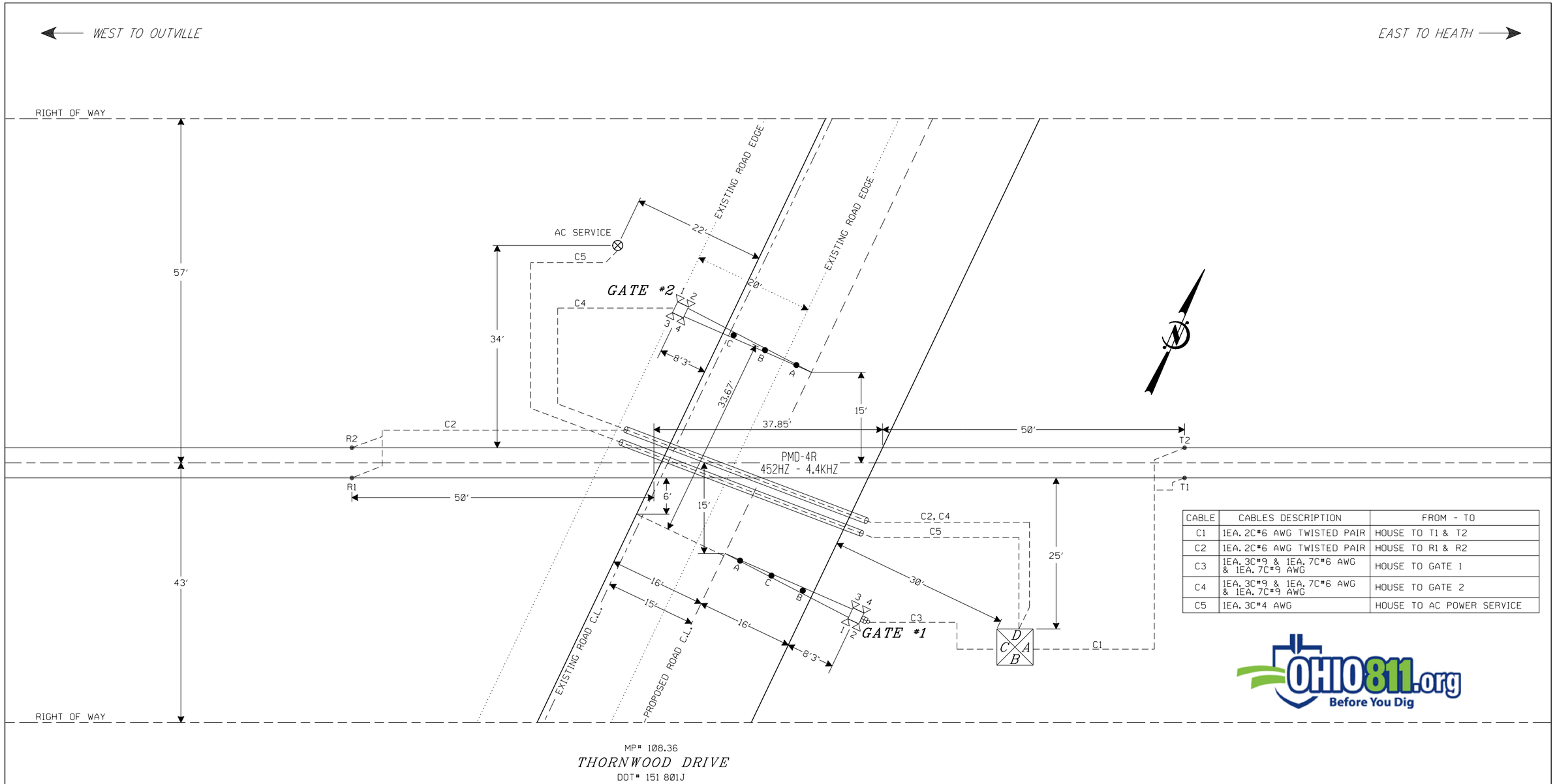

CABLE	CABLES DESCRIPTION	FROM - TO
C1	1EA. 2C#6 AWG TWISTED PAIR	HOUSE TO T1 & T2
C2	1EA. 2C#6 AWG TWISTED PAIR	HOUSE TO R1 & R2
C3	1EA. 3C#9 & 1EA. 7C#6 AWG & 1EA. 7C#9 AWG	HOUSE TO GATE 1
C4	1EA. 3C#9 & 1EA. 7C#6 AWG & 1EA. 7C#9 AWG	HOUSE TO GATE 2
C5	1EA. 3C#4 AWG	HOUSE TO AC POWER SERVICE

OHIO811.org Before You Dig

LEGEND:

- RIGID CONDUIT
- UNDERGROUND CABLE
- LOCATION OF AC SERVICE

REVISIONS

THE OPERATION OF THE CIRCUITS AND EQUIPMENT REPRESENTED HEREIN CANNOT BE FULLY CHECKED UNTIL ALL CIRCUITS AND DEVICES ARE CONNECTED TO FORM A COMPLETE SYSTEM, OR AN EFFECTIVE SUBSYSTEM. SUCH SYSTEM OR SUBSYSTEM MUST BE GIVEN COMPLETE CIRCUIT AND OPERATIONAL TESTS BEFORE BEING PLACED IN REGULAR OPERATION.

STATE OF OHIO SCOTT L WERTANS E-73435 REGISTERED PROFESSIONAL ENGINEER 6/21/19

The Columbus & Ohio River Rail Road Company
47849 Papermill Road
Coshocton, Ohio 43812
740-622-8092

TRACK AND CABLE LAYOUT

COLUMBUS & OHIO RIVER RAILROAD

DRAWN: PRS
DESIGNED: MST
CHECKED: JMW
DATE: 06-17-19

THORNWOOD DRIVE
HEATH, OHIO
DOT# 151 801J MILEPOST# 108.36

SHEET 02 OF 12

PMD-4R

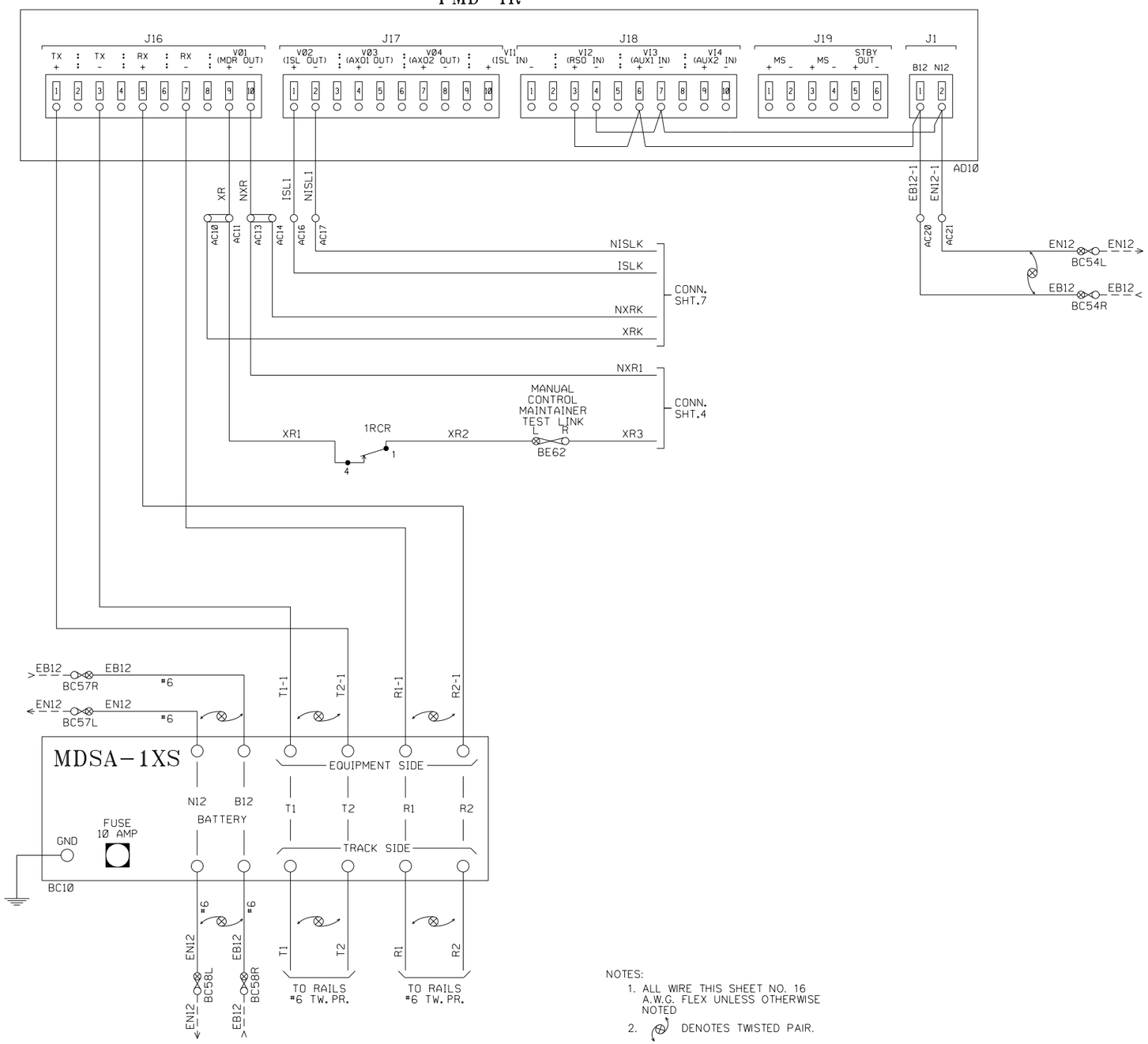

NOTES:
1. ALL WIRE THIS SHEET NO. 16 A.W.G. FLEX UNLESS OTHERWISE NOTED
2. DENOTES TWISTED PAIR.

NOTE:
DL = DEFAULT LEVEL
NA = NON APPLICABLE

PMD-4R SETUP PARAMETERS	
APPLICATION INFO	
APPLICATION	PMD-4R_MD[CW]V
APPLICATION CHECKSUM	3362
APPLICATION CRC	DBCD
CHASSIS ID	3
MDR1 SETTINGS	
MDR1 WARNING TIME (SEC)	30
MDR1 CW OR MD	CW
MDR1 AP TIME	NA
MDR1 AUX RECOVERY DELAY	5 (DL)
FREQUENCY	
APPROACH TRACK FREQUENCY (HZ)	452 HZ
BASIC APPROACH SETTINGS	
MASTER/SLAVE	MASTER
TRANSMITTER GAIN	200
TCA	FIELD ADJUST
DIRECTION MODE UNI/BI	BI
LIA	FIELD ADJUST
APPROACH LENGTH	1500 FT
AUTO RX ENABLE/DISABLE	ENABLED
ADVANCE APPROACH SETTINGS	
FALSE SHUNT	DISABLED
FALSE SHUNT RX	80
FALSE SHUNT DELAY	10
APPROACH RELEASE	DISABLED
APPROACH RELEASE RX	80
APPROACH RELEASE DELAY	10
LOSS OF SHUNT TIME (LOS)	16
APPROACH SETTING	NORMAL
ISLAND SETTINGS	
ISLAND TYPE INTERNAL/EXTERNAL	INTERNAL
ISLAND ENABLED	ENABLED
ISLAND DISABLE TIMEOUT	2 HR
ISLAND FREQUENCY (HZ)	4.4 KHZ
ISLAND LOSS OF SHUNT (LOS)	4
ISLAND FAULT DELAY	2
TRANSMITTER GAIN	0

REVISIONS

THE OPERATION OF THE CIRCUITS AND EQUIPMENT REPRESENTED HEREIN CANNOT BE FULLY CHECKED UNTIL ALL CIRCUITS AND DEVICES ARE CONNECTED TO FORM A COMPLETE SYSTEM, OR AN EFFECTIVE SUBSYSTEM. SUCH SYSTEM OR SUBSYSTEM MUST BE GIVEN COMPLETE CIRCUIT AND OPERATIONAL TESTS BEFORE BEING PLACED IN REGULAR OPERATION.

STATE OF OHIO SCOTT L WERTANS E-73435 REGISTERED PROFESSIONAL ENGINEER 6/21/19

The Columbus & Ohio River Rail Road Company
47849 Papermill Road
Coshocton, Ohio 43812
740-622-8092

PMD-4R CIRCUITRY & PROGRAM

COLUMBUS & OHIO RIVER RAILROAD

DRAWN: PRS
DESIGNED: MST
CHECKED: JMW
DATE: 06-17-19

THORNWOOD DRIVE
HEATH, OHIO
DOT# 151 801J MILEPOST# 108.36

SHEET 03 OF 12

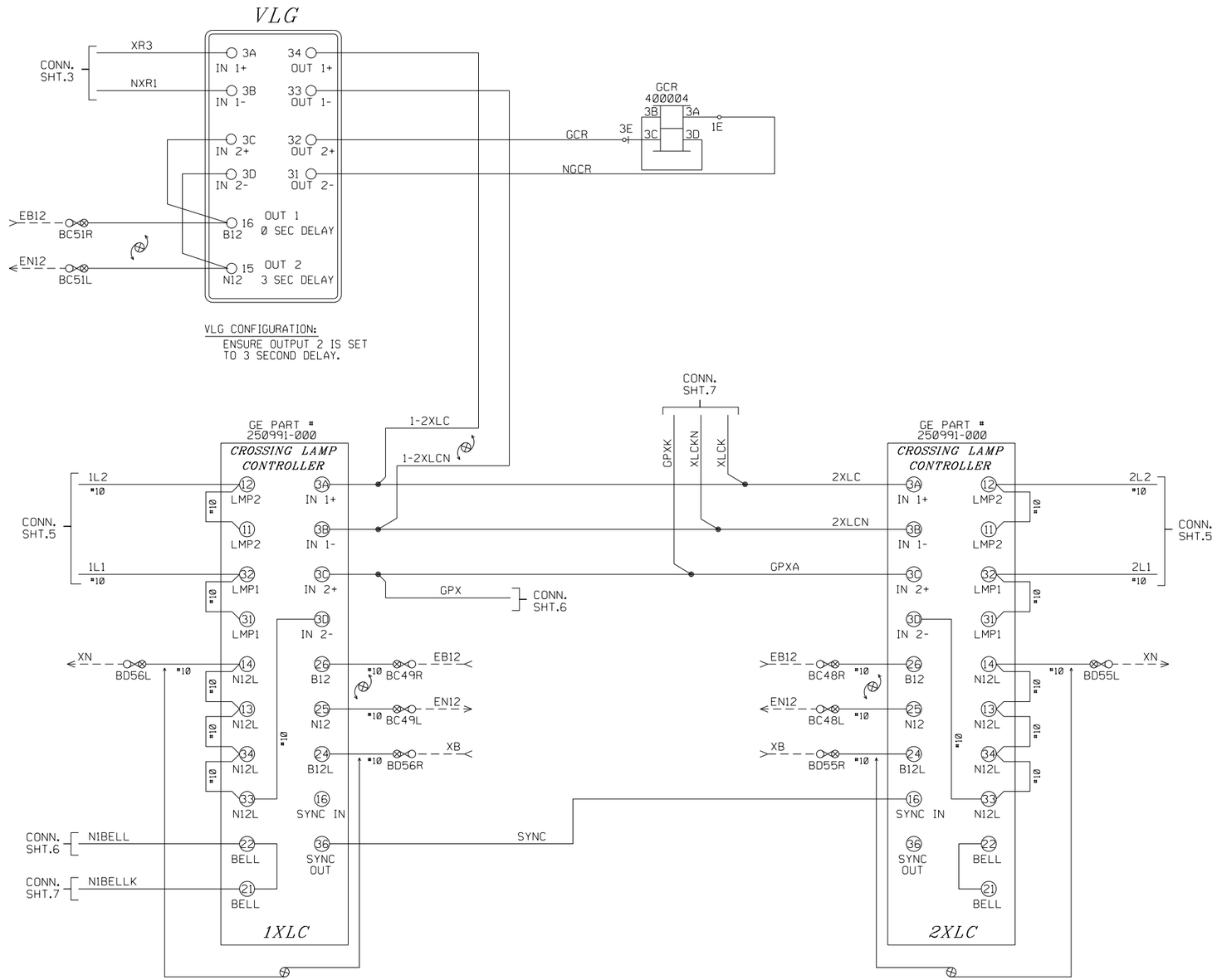

LEGEND:

- -TEST TERMINAL
- -EQUALIZER
- -ARRESTOR TO GROUND
- -TWISTED WIRE 2 TURNS PER FOOT
- -INSULATED NUT

NOTE:

1. ALL WIRING IN THE BUNGALOW IS #16 AWG FLEX UNLESS OTHERWISE NOTED.

REVISIONS

THE OPERATION OF THE CIRCUITS AND EQUIPMENT REPRESENTED HEREIN CANNOT BE FULLY CHECKED UNTIL ALL CIRCUITS AND DEVICES ARE CONNECTED TO FORM A COMPLETE SYSTEM, OR AN EFFECTIVE SUBSYSTEM. SUCH SYSTEM OR SUBSYSTEM MUST BE GIVEN COMPLETE CIRCUIT AND OPERATIONAL TESTS BEFORE BEING PLACED IN REGULAR OPERATION.

STATE OF OHIO
SCOTT L WERTANS
E-73435
REGISTERED PROFESSIONAL ENGINEER
6/21/19

The Columbus & Ohio River Rail Road Company
47849 Papermill Road
Coshocton, Ohio 43812
740-622-8092

CROSSING CONTROLLER

COLUMBUS & OHIO RIVER RAILROAD

DRAWN: PRS
DESIGNED: MST
CHECKED: JMW
DATE: 06-17-19

THORNWOOD DRIVE
HEATH, OHIO
DOT# 151 801J MILEPOST# 108.36

SHEET
04 OF 12

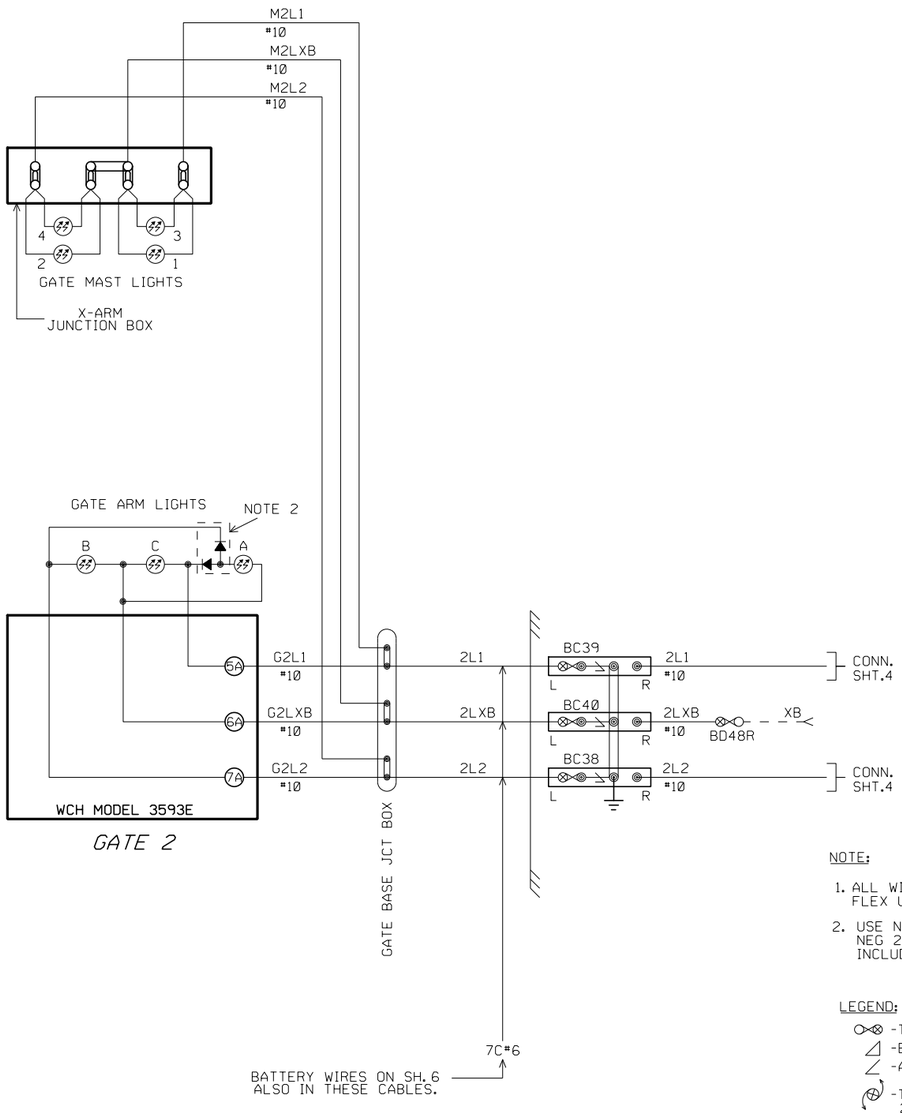

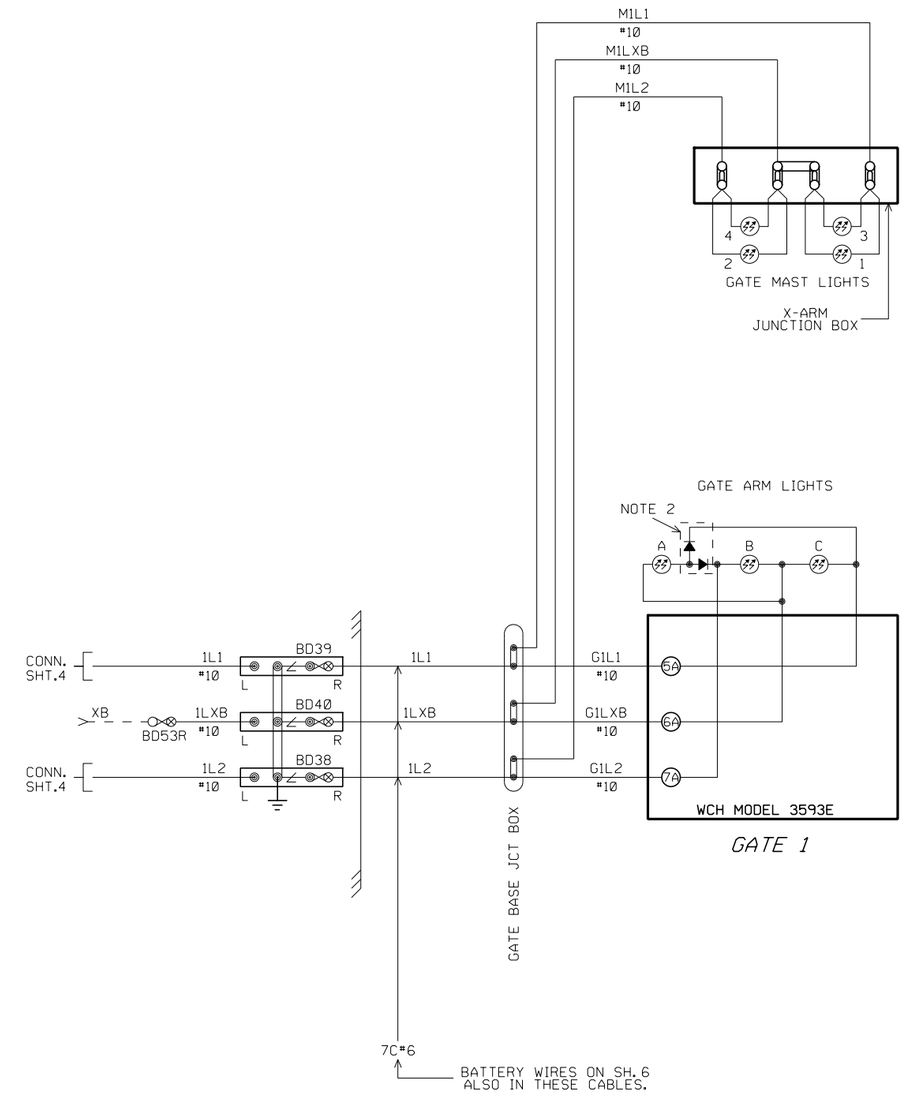

NOTE:

1. ALL WIRING IN THE BUNGALOW IS #16 AWG FLEX UNLESS OTHERWISE NOTED.
2. USE NEG GATE LIGHTS NEG 2018 3DC LED RD INCLUDES DIODES IN TIP LIGHTS

LEGEND:

- -TEST TERMINAL
- -EQUALIZER
- -ARRESTOR TO GROUND
- -TWISTED WIRE 2 TURNS PER FOOT
- -INSULATED NUT

REVISIONS

THE OPERATION OF THE CIRCUITS AND EQUIPMENT REPRESENTED HEREIN CANNOT BE FULLY CHECKED UNTIL ALL CIRCUITS AND DEVICES ARE CONNECTED TO FORM A COMPLETE SYSTEM, OR AN EFFECTIVE SUBSYSTEM. SUCH SYSTEM OR SUBSYSTEM MUST BE GIVEN COMPLETE CIRCUIT AND OPERATIONAL TESTS BEFORE BEING PLACED IN REGULAR OPERATION.

STATE OF OHIO
SCOTT L WERTANS
E-73435
REGISTERED PROFESSIONAL ENGINEER
6/21/19

The Columbus & Ohio River Rail Road Company
47849 Papermill Road
Coshocton, Ohio 43812
740-622-8092

GATE LIGHTING CIRCUITRY

COLUMBUS & OHIO RIVER RAILROAD

DRAWN: PRS
DESIGNED: MST
CHECKED: JMW
DATE: 06-17-19

THORNWOOD DRIVE
HEATH, OHIO
DOT# 151 801J MILEPOST# 108.36

SHEET
05 OF 12

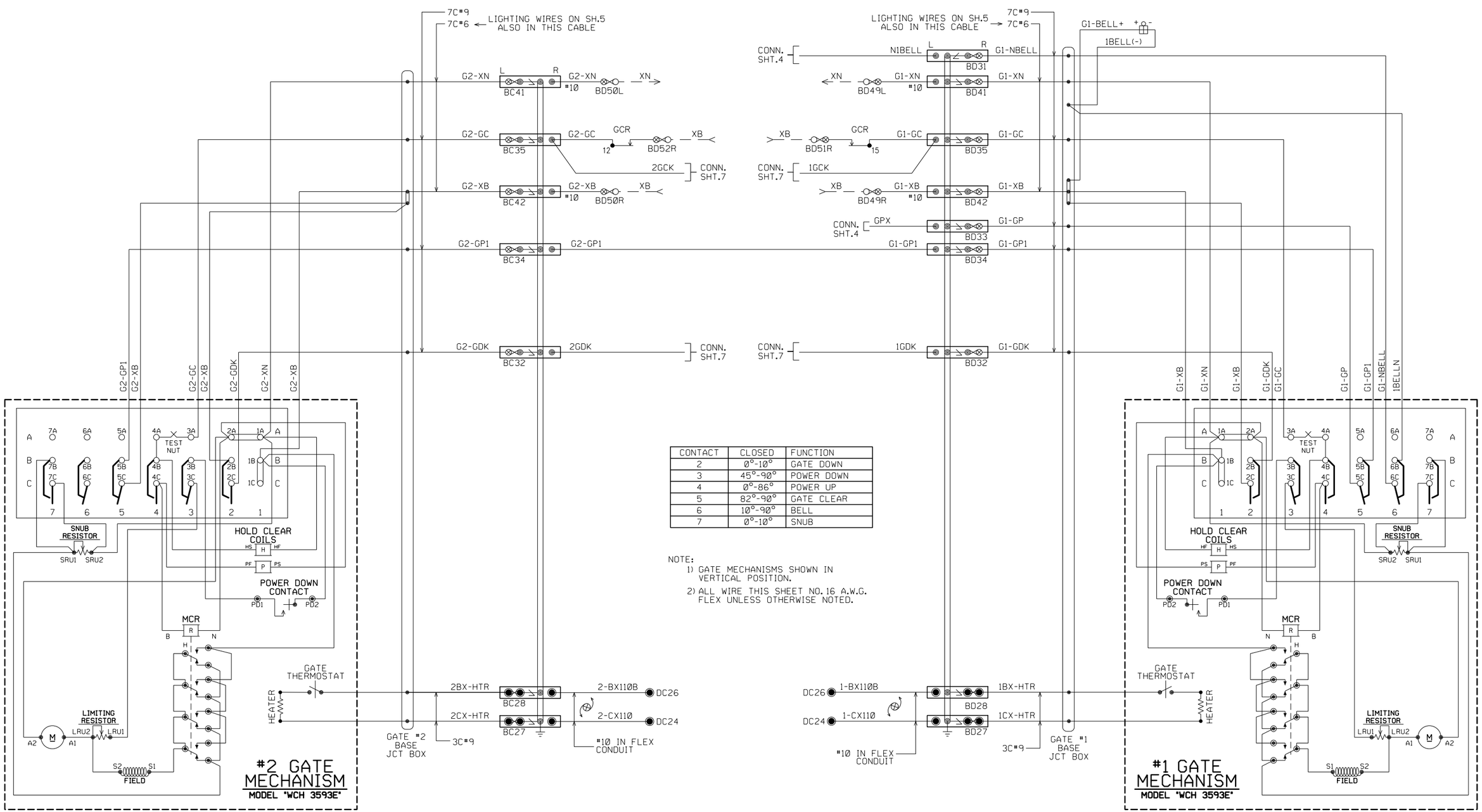

CONTACT	CLOSED	FUNCTION
2	0°-10°	GATE DOWN
3	45°-90°	POWER DOWN
4	0°-86°	POWER UP
5	82°-90°	GATE CLEAR
6	10°-90°	BELL
7	0°-10°	SNUB

NOTE:
1) GATE MECHANISMS SHOWN IN VERTICAL POSITION.
2) ALL WIRE THIS SHEET NO. 16 A.W.G. FLEX UNLESS OTHERWISE NOTED.

REVISIONS

THE OPERATION OF THE CIRCUITS AND EQUIPMENT REPRESENTED HEREIN CANNOT BE FULLY CHECKED UNTIL ALL CIRCUITS AND DEVICES ARE CONNECTED TO FORM A COMPLETE SYSTEM, OR AN EFFECTIVE SUBSYSTEM. SUCH SYSTEM OR SUBSYSTEM MUST BE GIVEN COMPLETE CIRCUIT AND OPERATIONAL TESTS BEFORE BEING PLACED IN REGULAR OPERATION.

STATE OF OHIO
SCOTT L WERTANS
E-73435
REGISTERED PROFESSIONAL ENGINEER
6/21/19

The Columbus & Ohio River Rail Road Company
47849 Papermill Road
Coshocton, Ohio 43812
740-622-8092

GATE MECH CIRCUITRY

COLUMBUS & OHIO RIVER RAILROAD

DRAWN: PRS
DESIGNED: MST
CHECKED: JMW
DATE: 06-17-19

THORNWOOD DRIVE
HEATH, OHIO
DOT# 151 801J MILEPOST# 108.36

SHEET 06 OF 12

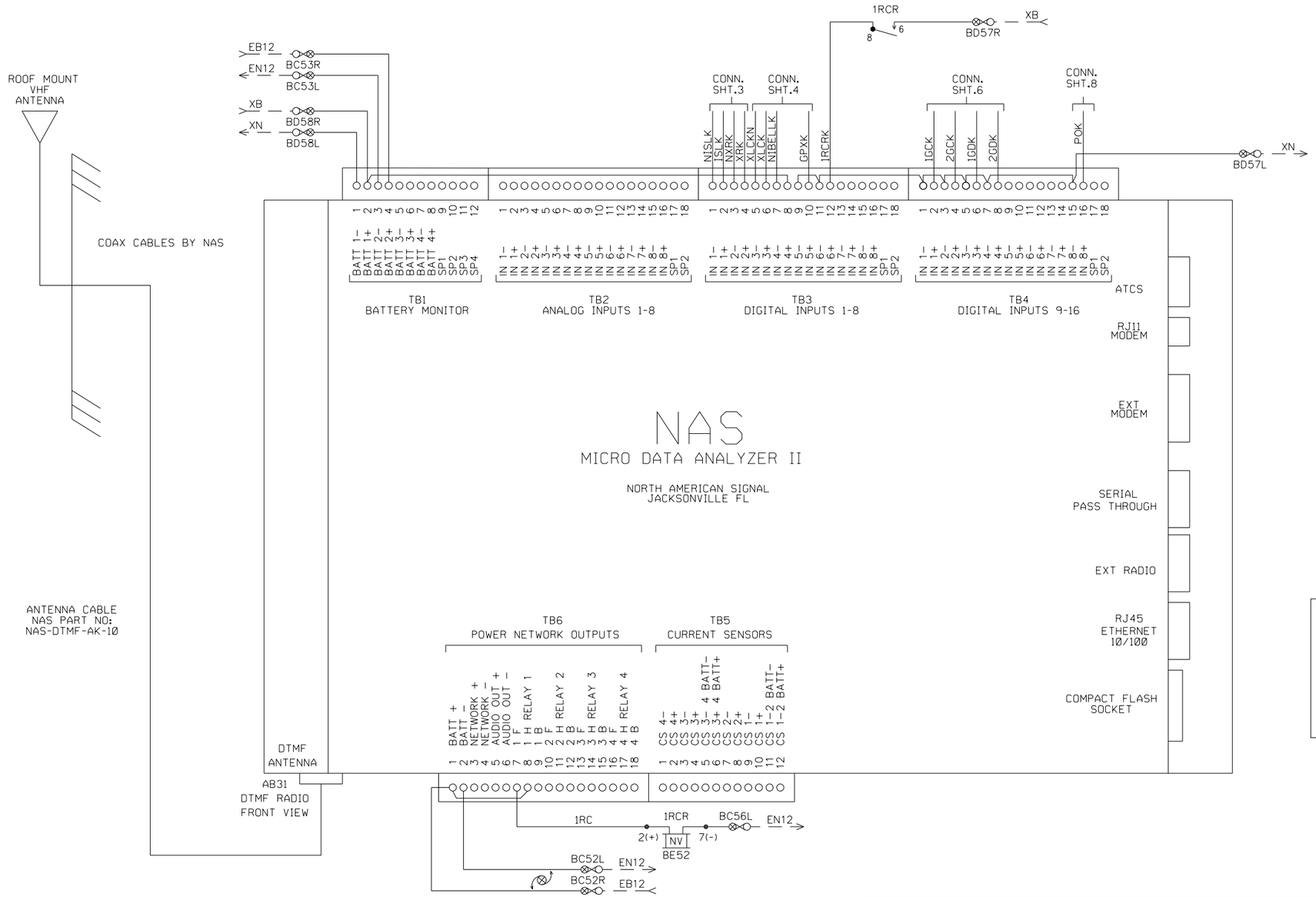

NOTES:
1) TO ACTIVATE CROSSING ENTER 801#
2) TO DEACTIVATE CROSSING ENTER 801*

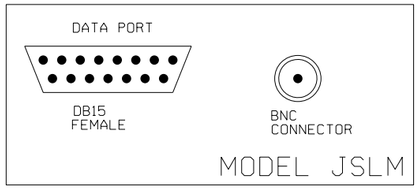

MOUNTED INTERNAL ON MDA UNIT

NOTES:
1. ALL WIRE THIS SHEET NO. 16 A.W.G. FLEX UNLESS OTHERWISE NOTED.
2. DENOTES TWISTED WIRE PAIR.
3. DENOTES TEST TERMINAL.

REVISIONS

THE OPERATION OF THE CIRCUITS AND EQUIPMENT REPRESENTED HEREIN CANNOT BE FULLY CHECKED UNTIL ALL CIRCUITS AND DEVICES ARE CONNECTED TO FORM A COMPLETE SYSTEM, OR AN EFFECTIVE SUBSYSTEM. SUCH SYSTEM OR SUBSYSTEM MUST BE GIVEN COMPLETE CIRCUIT AND OPERATIONAL TESTS BEFORE BEING PLACED IN REGULAR OPERATION.

STATE OF OHIO SCOTT L WERTANS E-73435 REGISTERED PROFESSIONAL ENGINEER 6/21/19

The Columbus & Ohio River Rail Road Company
47849 Papermill Road
Coshocton, Ohio 43812
740-622-8092

DATA RECORDER CIRCUITRY

COLUMBUS & OHIO RIVER RAILROAD

DRAWN: PRS
DESIGNED: MST
CHECKED: JMW
DATE: 06-17-19

THORNWOOD DRIVE
HEATH, OHIO
DOT# 151 801J MILEPOST# 108.36

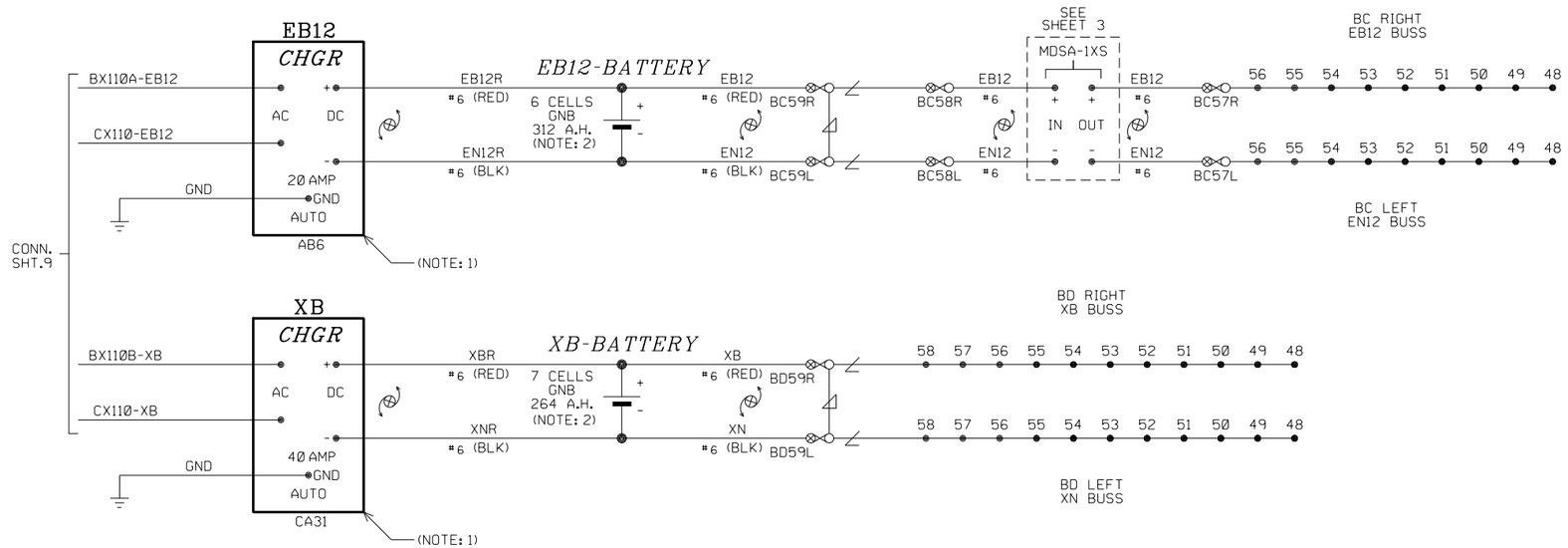

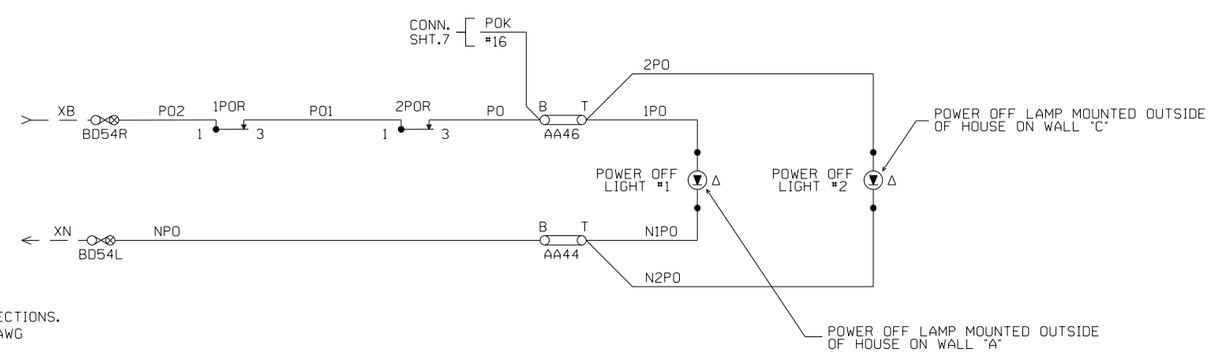

NOTES:

1. USE 120AC INPUT FOR CHARGERS.
2. USE 1/4" TERMINALS AT BATTERY CONNECTIONS.
3. ALL WIRING IN THE BUNGALOW IS #16 AWG FLEX UNLESS OTHERWISE NOTED.

LEGEND:

- -TEST TERMINAL
- -EQUALIZER
- -ARRESTOR TO GROUND
- -TWISTED WIRE 2 TURNS PER FOOT
- -INSULATED NUT
- △ - LED LIGHT 8 TO 16 VDC (P/N: LC2-002-WR-LA)

REVISIONS

THE OPERATION OF THE CIRCUITS AND EQUIPMENT REPRESENTED HEREIN CANNOT BE FULLY CHECKED UNTIL ALL CIRCUITS AND DEVICES ARE CONNECTED TO FORM A COMPLETE SYSTEM, OR AN EFFECTIVE SUBSYSTEM. SUCH SYSTEM OR SUBSYSTEM MUST BE GIVEN COMPLETE CIRCUIT AND OPERATIONAL TESTS BEFORE BEING PLACED IN REGULAR OPERATION.

STATE OF OHIO
SCOTT L WERTANS
E-73435
REGISTERED PROFESSIONAL ENGINEER
6/21/19

The Columbus & Ohio River Rail Road Company
47849 Papermill Road
Coshocton, Ohio 43812
740-622-8092

DC POWER DISTRIBUTION

COLUMBUS & OHIO RIVER RAILROAD

DRAWN: PRS
DESIGNED: MST
CHECKED: JMW
DATE: 06-17-19

THORNWOOD DRIVE
HEATH, OHIO
DOT# 151 801J MILEPOST# 108.36

SHEET 08 OF 12

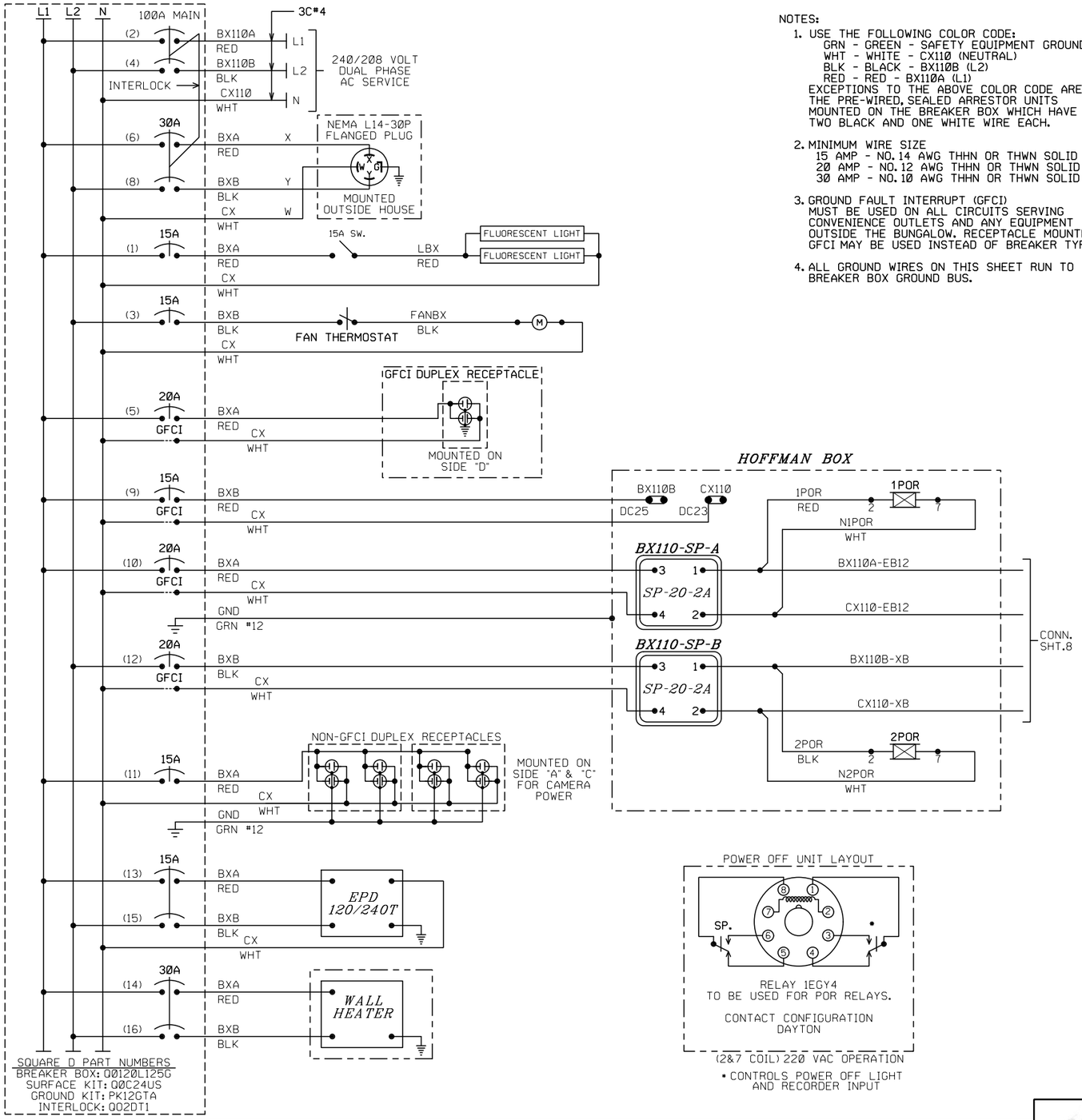

NOTES:

1. USE THE FOLLOWING COLOR CODE:
   GRN - GREEN - SAFETY EQUIPMENT GROUND
   WHT - WHITE - CX110 (NEUTRAL)
   BLK - BLACK - BX110B (L2)
   RED - RED - BX110A (L1)
   EXCEPTIONS TO THE ABOVE COLOR CODE ARE THE PRE-WIRED, SEALED ARRESTOR UNITS MOUNTED ON THE BREAKER BOX WHICH HAVE TWO BLACK AND ONE WHITE WIRE EACH.
2. MINIMUM WIRE SIZE
   15 AMP - NO.14 AWG THHN OR THWN SOLID
   20 AMP - NO.12 AWG THHN OR THWN SOLID
   30 AMP - NO.10 AWG THHN OR THWN SOLID
3. GROUND FAULT INTERRUPT (GFCI) MUST BE USED ON ALL CIRCUITS SERVING CONVENIENCE OUTLETS AND ANY EQUIPMENT OUTSIDE THE BUNGALOW. RECEPTACLE MOUNTED GFCI MAY BE USED INSTEAD OF BREAKER TYPE.
4. ALL GROUND WIRES ON THIS SHEET RUN TO BREAKER BOX GROUND BUS.

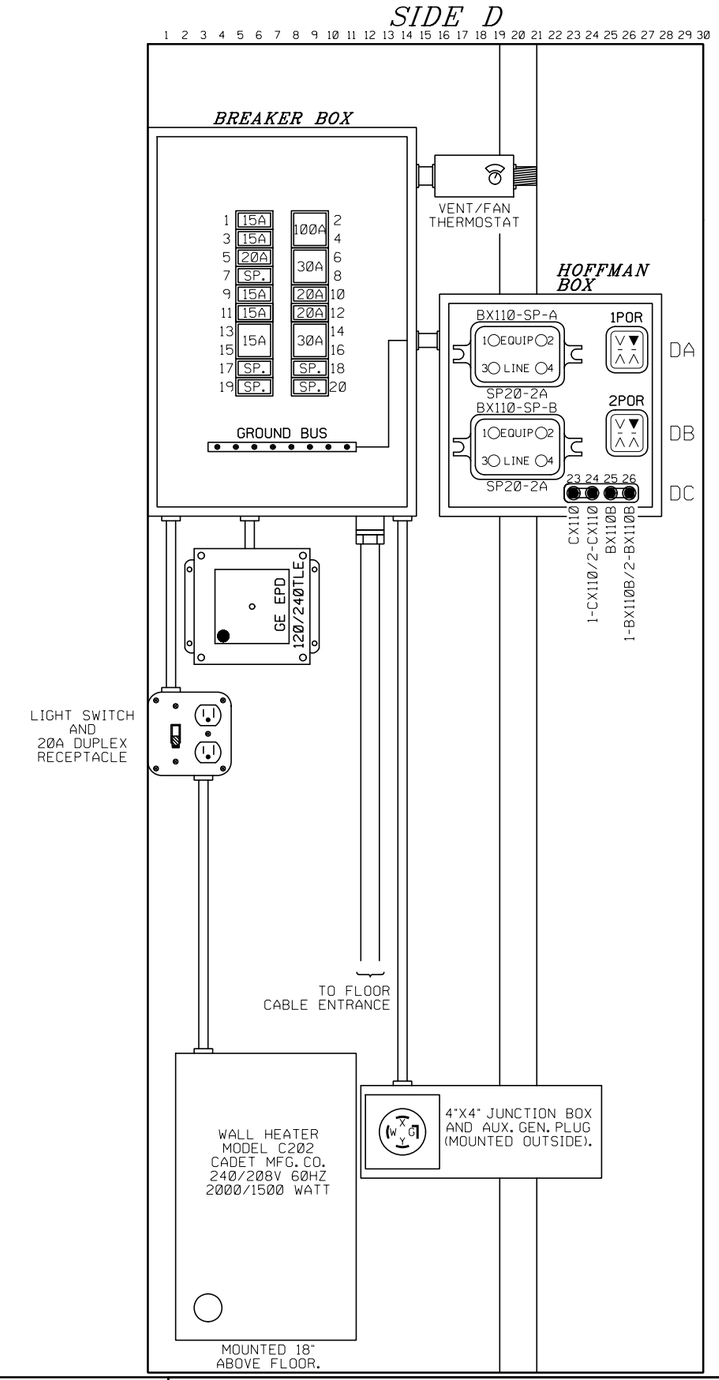

REVISIONS

THE OPERATION OF THE CIRCUITS AND EQUIPMENT REPRESENTED HEREIN CANNOT BE FULLY CHECKED UNTIL ALL CIRCUITS AND DEVICES ARE CONNECTED TO FORM A COMPLETE SYSTEM, OR AN EFFECTIVE SUBSYSTEM. SUCH SYSTEM OR SUBSYSTEM MUST BE GIVEN COMPLETE CIRCUIT AND OPERATIONAL TESTS BEFORE BEING PLACED IN REGULAR OPERATION.

STATE OF OHIO SCOTT L WERTANS E-73435 REGISTERED PROFESSIONAL ENGINEER 6/21/19

The Columbus & Ohio River Rail Road Company
47849 Papermill Road
Coshocton, Ohio 43812
740-622-8092

SIDE D DETAIL - AC POWER DISTRIBUTION

COLUMBUS & OHIO RIVER RAILROAD

DRAWN: PRS
DESIGNED: MST
CHECKED: JMW
DATE: 06-17-19

THORNWOOD DRIVE
HEATH, OHIO
DOT# 151 801J MILEPOST# 108.36

SHEET 09 OF 12

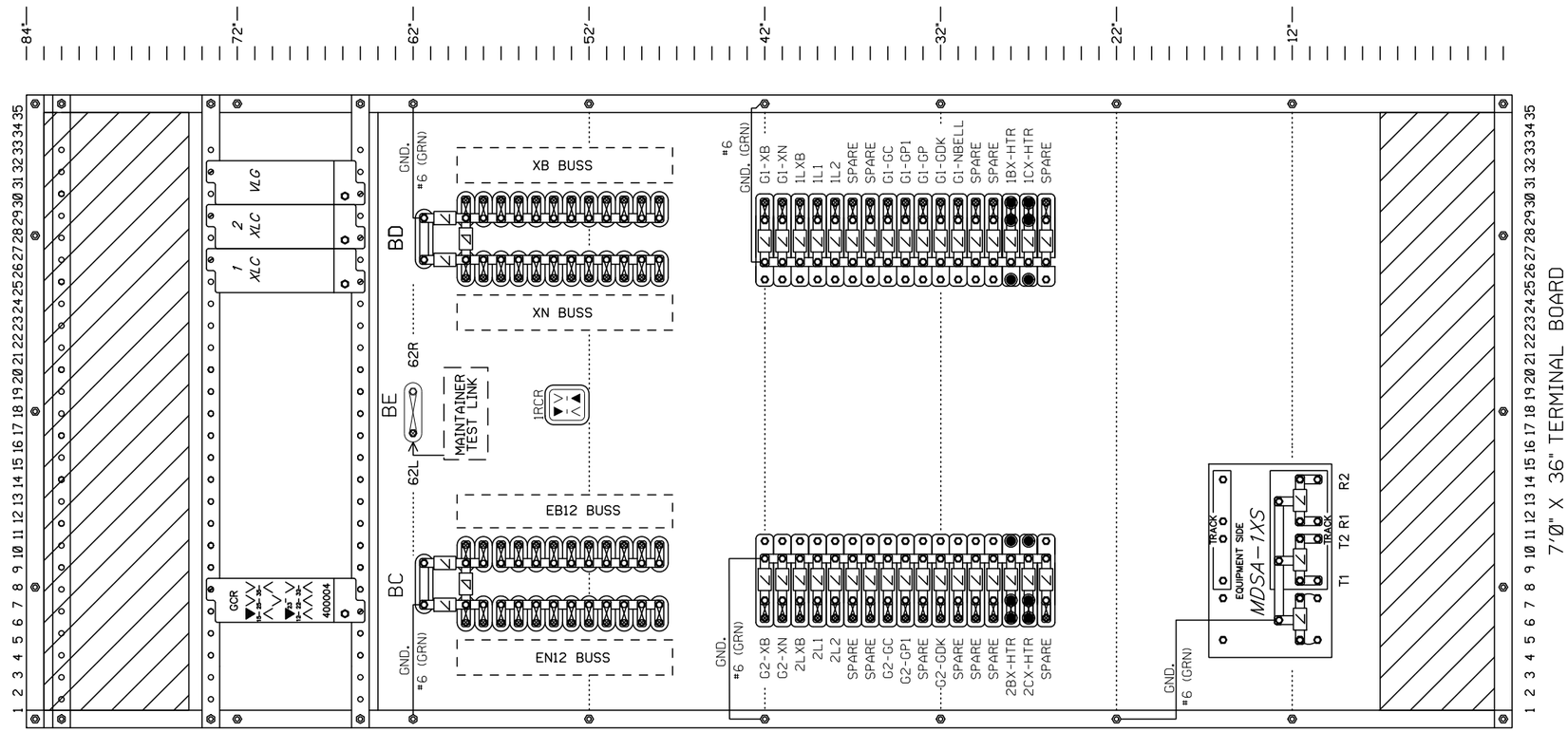

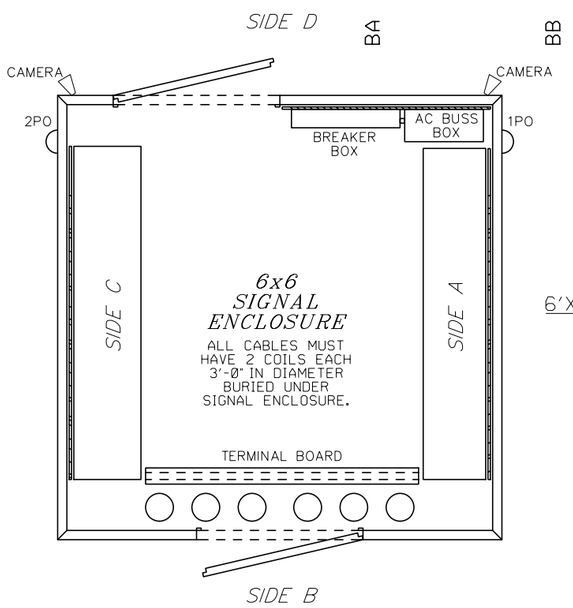

6'X6' SIGNAL ENCLOSURE LAYOUT

"NOT TO SCALE"

DTMF RELAY UNIT LAYOUT

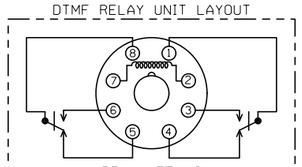

RELAY 5EMH3
TO BE USED FOR 1RCR RELAY.
OPERATING VOLTAGE = 12 VDC

CONTACT CONFIGURATION
DAYTON

BATTERY BUSS DETAILS

ROW BC

EN12 BUSS (LEFT)		EB12 BUSS (RIGHT)
EB12 BATT(-)	59	EB12 BATT(+)
MDSA-1XS IN-	58	MDSA-1XS IN+
MDSA-1XS OUT-	57	MDSA-1XS OUT+
1RCR_7(-)	56	
	55	
AC21	54	AC20
MDA II TB1 BATT 2(-)	53	MDA II TB1 BATT 2(+)
MDA II TB6 BATT-	52	MDA II TB6 BATT+
VLG-N12	51	VLG-B12
	50	
1XLC-25	49	1XLC-26
2XLC-25	48	2XLC-26

ROW BD

XN BUSS (LEFT)		XB BUSS (RIGHT)
XB BATT(-)	59	XB BATT(+)
MDA II TB1 BATT 1(-)	58	MDA II TB1 BATT 1(+)
MDA II TB4 IN 8(-)	57	1RCR_6
1XLC-14	56	1XLC-24
2XLC-14	55	2XLC-24
AA44B	54	1POR_1
	53	BD40L
	52	GCR_13
	51	GCR_16
BC41R	50	BC42R
BD41L	49	BD42L
	48	BC40R

RELAY CROSS REFERENCE

ALSTOM	SIEMENS
A62-277	400004

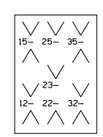

400004

▼ = CONTACT USED

⋁ = CONTACT NOT USED

NOTE: NO EQUIPMENT ALLOWED IN SHADED AREAS.

REVISIONS

THE OPERATION OF THE CIRCUITS AND EQUIPMENT REPRESENTED HEREIN CANNOT BE FULLY CHECKED UNTIL ALL CIRCUITS AND DEVICES ARE CONNECTED TO FORM A COMPLETE SYSTEM, OR AN EFFECTIVE SUBSYSTEM. SUCH SYSTEM OR SUBSYSTEM MUST BE GIVEN COMPLETE CIRCUIT AND OPERATIONAL TESTS BEFORE BEING PLACED IN REGULAR OPERATION.

STATE OF OHIO
SCOTT L WERTANS
E-73435
REGISTERED PROFESSIONAL ENGINEER
6/21/19

The Columbus & Ohio River Rail Road Company
47849 Papermill Road
Coshocton, Ohio 43812
740-622-8092

SIDE B DETAIL - TERMINAL BOARD

COLUMBUS & OHIO RIVER RAILROAD

DRAWN: PRS
DESIGNED: MST
CHECKED: JMW
DATE: 06-17-19

THORNWOOD DRIVE
HEATH, OHIO
DOT# 151 801J MILEPOST# 108.36

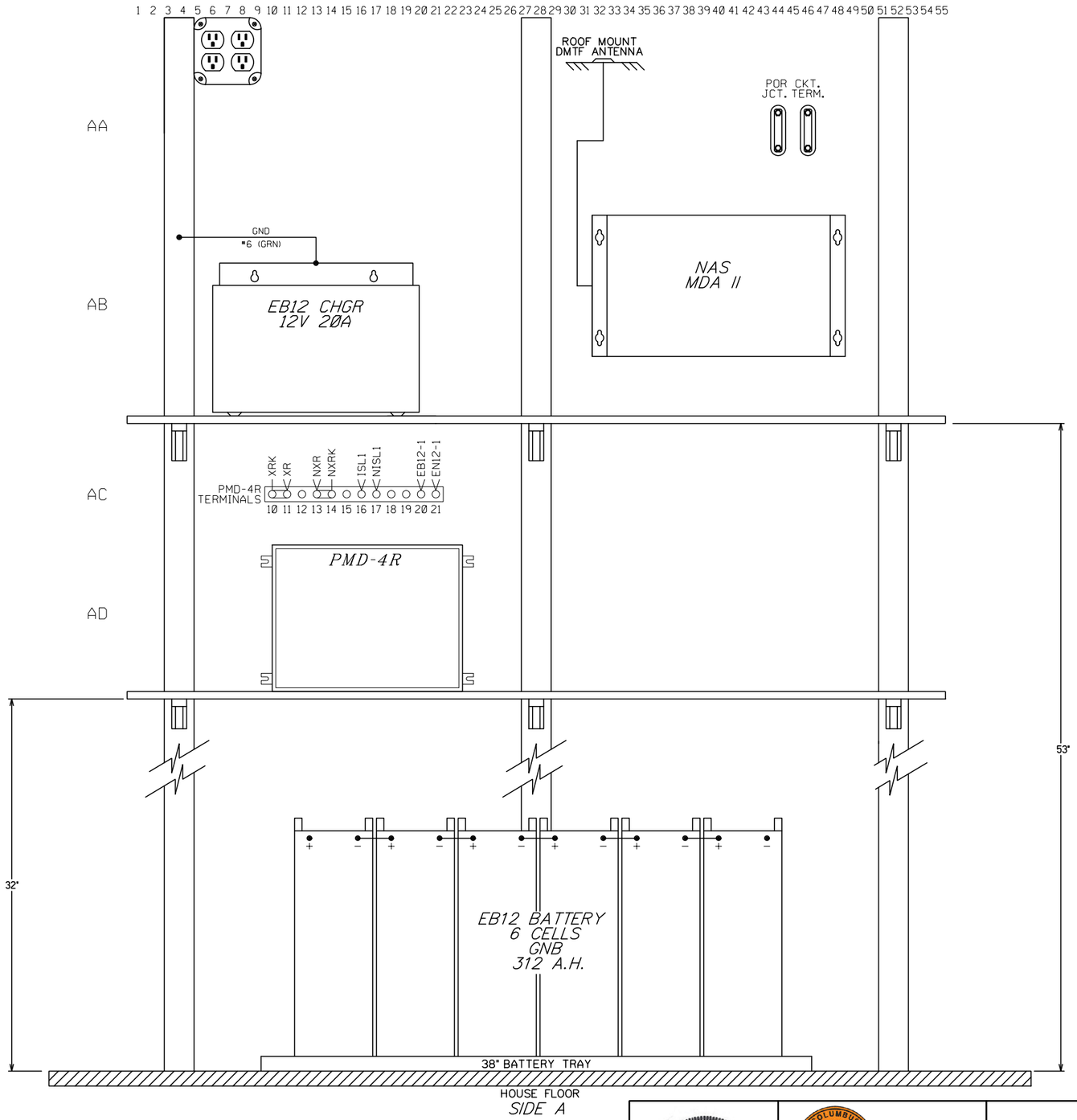

SIDE A

REVISIONS

THE OPERATION OF THE CIRCUITS AND EQUIPMENT REPRESENTED HEREIN CANNOT BE FULLY CHECKED UNTIL ALL CIRCUITS AND DEVICES ARE CONNECTED TO FORM A COMPLETE SYSTEM, OR AN EFFECTIVE SUBSYSTEM. SUCH SYSTEM OR SUBSYSTEM MUST BE GIVEN COMPLETE CIRCUIT AND OPERATIONAL TESTS BEFORE BEING PLACED IN REGULAR OPERATION.

STATE OF OHIO
SCOTT L WERTANS
E-73435
REGISTERED PROFESSIONAL ENGINEER
8/21/19

The Columbus & Ohio River Rail Road Company
47849 Papermill Road
Coshocton, Ohio 43812
740-622-8092

SIDE A DETAIL

COLUMBUS & OHIO RIVER RAILROAD

DRAWN: PRS
DESIGNED: MST
CHECKED: JMW
DATE: 06-17-19

THORNWOOD DRIVE
HEATH, OHIO
DOT# 151 801J MILEPOST# 108.36

SHEET 11 OF 12

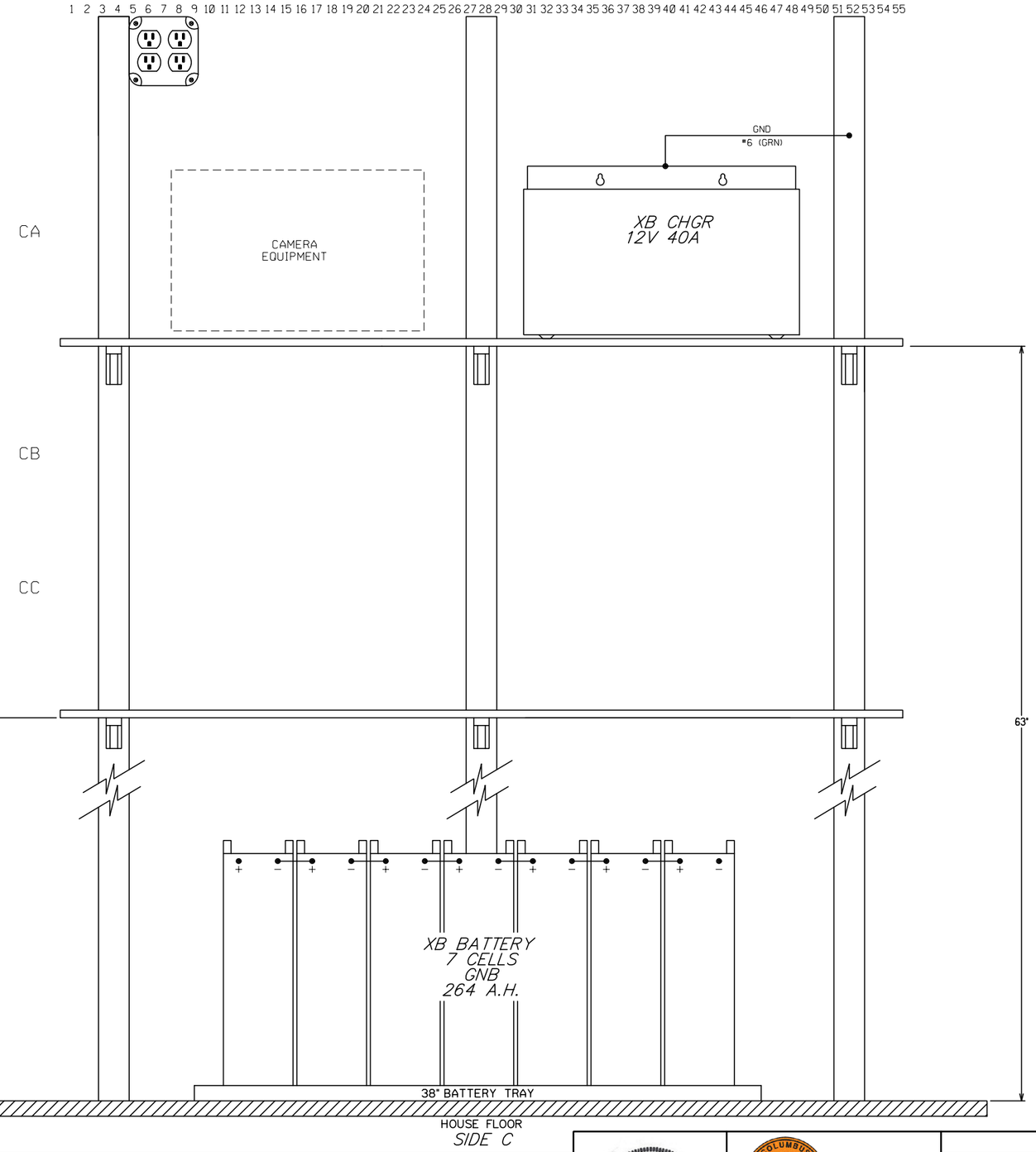

SIDE C

REVISIONS

THE OPERATION OF THE CIRCUITS AND EQUIPMENT REPRESENTED HEREIN CANNOT BE FULLY CHECKED UNTIL ALL CIRCUITS AND DEVICES ARE CONNECTED TO FORM A COMPLETE SYSTEM, OR AN EFFECTIVE SUBSYSTEM. SUCH SYSTEM OR SUBSYSTEM MUST BE GIVEN COMPLETE CIRCUIT AND OPERATIONAL TESTS BEFORE BEING PLACED IN REGULAR OPERATION.

STATE OF OHIO
SCOTT L WERTANS
E-73435
REGISTERED PROFESSIONAL ENGINEER
6/21/19

The Columbus & Ohio River Rail Road Company
47849 Papermill Road
Coshocton, Ohio 43812
740-622-8092

SIDE C DETAIL

COLUMBUS & OHIO RIVER RAILROAD

DRAWN: PRS
DESIGNED: MST
CHECKED: JMW
DATE: 06-17-19

THORNWOOD DRIVE
HEATH, OHIO
DOT# 151 801J MILEPOST# 108.36

SHEET 12 OF 12

Force Account Estimate

Force Account Estimate

Railroad:	The Columbus & Ohio River Rail Road Company	**Region:**	NORTHEAST
Agency:	ORDC	**State:**	OH
DOT #:	151801J	**COUNTY:**	Licking
ROADWAY:	Thornwood Drive	**CITY:**	Heath
DESCRIPTION:	Installation of 12" LED Flashing Lights and Gates, camera system, new 6x6 signal bungalow with PMD-4. Project to be done in conjunction with Licking County roadway realignment and surface replacement.		
AGENCY PROJECT NUMBER:	PID 107285	**ESTIMATE SUBJECT TO REVISION AFTER:**	12/14/19

PRELIMINARY ENGINEERING:				
Contracted & Administrative Engineering Services			$	12,900
Subtotal			**$**	**12,900**
CONSTRUCTION & CLOSEOUT:				
Contracted & Administrative Engineering Services			$	12,859
Subtotal			**$**	**12,859**
FLAGGING SERVICE:				
Contracted or Railroad Flagmen Services	5	Days	$	7,000
Subtotal			**$**	**7,000**
UTILITY WORK:				
Power Service			$	5,000
Other			$	-
Subtotal			**$**	**5,000**
CONTRACT WORK:				
Outside Services			$	-
Design & Labor & Material			$	108,532
Subtotal			**$**	**108,532**
RAILROAD TRACK:				
Labor & Material			$	-
Subtotal			**$**	**-**
RAILROAD SIGNAL & COMMUNICATION:				
Labor & Material			$	-
Subtotal			**$**	**-**
PROJECT SUBTOTAL:			**$**	**146,291**
Public Project Admin:	**3.00%**		$	4,389
Contingencies:	**0.00%**		$	-
PROJECT TOTAL:		**********	**$**	**150,680**
CURRENT AUTHORIZED BUDGET:		**********	**$**	**-**
TOTAL SUPPLEMENT REQUESTED:		**********	**$**	**150,680**

DIVISION OF COST:

Agency	100.00%	$	150,680
Railroad	0.00%	$	-

NOTE: Estimate is based on FULL CROSSING CLOSURE during work by Railroad Forces & Contractors.

This estimate has been prepared based on site conditions, anticipated work duration periods, material prices, labor rates, manpower and resource availability, and other factors known as of the date prepared. The actual cost for the railroad work may differ based upon the agency's requirements, their contractor's work procedures, and/or other conditions that become apparent once construction commences or during the progress of the work.

Estimated prepared by: BPB **Approved by:** *JAS* **Public Project Department**

DATE: 05/15/19 **REVISED:** 06/17/19 **DATE:** 06/17/19

Factory Wired Instrument Shelter

Quote Number:	0				
Customer:	Columbus & Ohio River RR				
Road Name:	Thornwood Dr.				
City, State & County:	Heath,(Licking), OH.				
Crossing No.	151801J				
Milepost No.	108.36				
State Project No.	0				
ITEM DESCRIPTION		**QTY**	**U/M**	**UNIT SELL**	**TOTAL SELL**
Alum. 6' x 6, Shelter GETS Crossing W/O NEMA PLUGS		1	EA	$ 13,854.38	$ 13,854.38
Camera Material (Quote 18999) 4 Cam,19" Mon,4 TB HD Package (Jtoler E-mail 2-9-18)		1	EA	$ 1,712.90	$ 1,712.90
Power Off Light, LED, 2 Wire		2	EA	$ 161.29	$ 322.58
PMD-4R, Redundant Motion		1	EA	$ 13,651.61	$ 13,651.61
Surge Arrestor. MDSA-1XS		1	EA	$ 505.51	$ 505.51
Vital Logic Gate (VLG)		1	EA	$ 1,325.59	$ 1,325.59
Plugboard Kit For VLG		1	EA	$ 117.72	$ 117.72
Crossing Lamp Controller (XLC)		2	EA	$ 850.75	$ 1,701.51
Plugboard Kit For XLC		2	EA	$ 91.01	$ 182.02
ST-1 Relay Socket w/Test Posts, (22) 20-16 Flags		1	EA	$ 82.31	$ 82.31
Terminal Flag #10-#14		30	EA	$ 2.96	$ 88.71
Relay, ST-1, 4FB-2F-1B, 500ohm	A62-277	1	EA	$ 894.35	$ 894.35
Lightning Arrester, Clearview		38	EA	$ 19.87	$ 755.10
Heavy Duty Equalizer		2	EA	$ 25.12	$ 50.24
AC Line Surge Protector, Model SP20-2A		2	EA	$ 204.73	$ 409.46
Panduit Duct, 2' X 3', 2 inch		30	FT	$ 3.26	$ 97.74
Panduit Cover, 2' X 3', 2 inch		30	FT	$ 0.84	$ 25.16
Panduit Duct, 2' X 3', 3 inch		18	FT	$ 3.77	$ 67.94
Panduit Cover, 2' X 3', 3 inch		18	FT	$ 1.27	$ 22.84
#10 TC Blue Flex Wire		600	FT	$ 0.44	$ 264.52
#14 TC Blue Flex Wire		700	FT	$ 0.43	$ 301.08
#10/12 AMP Eyelets		150	EA	$ 0.25	$ 37.10
#14/16 AMP Eyelets		150	EA	$ 0.13	$ 19.35
#6 AWG THHN Strand Red		100	FT	$ 0.52	$ 51.61
#6 AWG THHN Strand Black		100	FT	$ 0.52	$ 51.61
#6 AWG THHN Strand Green		12	FT	$ 0.49	$ 5.94
#10 AWG THHN Solid Red		10	FT	$ 0.17	$ 1.72
#10 AWG THHN Solid White		10	FT	$ 0.17	$ 1.72
Recorder, Micro Data Analyzer II w/ DTMF-**DO NOT ORDER-NEED TO ORDER ANTENNA KIT**		1	EA	$ 3,709.68	$ 3,709.68
Insulated Nut		16	EA	$ 0.70	$ 11.18
Relay, NV, 12VAC, 2FB (8 PINS)		1	EA	$ 18.66	$ 18.66
Relay, NV, 120VAC, 2FB (8 PINS)		2	EA	$ 14.47	$ 28.95
Socket, Relay (8 PINS) OCT Screw		3	EA	$ 2.82	$ 8.45
Battery Charger, 12V / 40A		2	EA	$ 720.43	$ 1,440.86
4 Post Terminal Block w/ Hardware		34	EA	$ 15.80	$ 537.05
Buss Strap Grd Assy.		3	FT	$ 10.83	$ 32.48
Tags, Slip On		0.25	Roll	$ 301.08	$ 75.27
Stick-On Stencil		2	EA	$ 29.57	$ 59.14
Test Link, 1" Offset w/Gold Nut		86	EA	$ 2.33	$ 200.67
Terminal Block, 2 x 6 w/flat nut only		9	EA	$ 20.43	$ 183.87
Terminal Block, 2 post 2-3/8" w/flat nut only		6	EA	$ 7.26	$ 43.55
1/4" Bevel Washer		100	EA	$ 0.06	$ 6.02
1/4-24 Clamp Nut Nickel		50	EA	$ 0.12	$ 5.97
#6 Non-Insulated Terminal Eye 1/4 stud		30	EA	$ 0.35	$ 10.65
#6 Non-Insulated Terminal Eye 5/16 stud		8	EA	$ 0.41	$ 3.27
Binding (Barrel) Nuts		150	EA	$ 0.15	$ 22.58
Maintainer Test Switch, 3 post test terminal		1	EA	$ 16.55	$ 16.55
Strap, Solid, 1" Centers		5	EA	$ 0.32	$ 1.61
Strap, Solid, 2-3/8" Centers		6	EA	$ 0.69	$ 4.13
Buss Strap, 1" Centers 36 Hole		2	EA	$ 17.10	$ 34.19
Circuit Plan Holder		1	EA	$ 11.83	$ 11.83
FWIS Misc. Package		1	Lot	$ 107.53	$ 107.53
Total Cost For Factory Wired Instrument Shelter Material				$38,521.51	$43,176.44

Gate/Flasher Material

Quote Number:	0						
Customer:	Columbus & Ohio River RR						
Road Name:	Thornwood Dr.						
City, State & County:	Heath,(Licking), OH.						
Crossing No.	151801J						
Milepost No.	108.36						
State Project No.	0						
ITEM DESCRIPTION		**QTY**	**U/M**	**UNIT SELL**	**TOTAL SELL**		
12" Head w/24" Background & Hood (Painted AL)							
Terminal For LED Hook-up **(For larger RDG & GE LED)**		8	EA	$ 105.38	$ 843.01		
12" LED Highway Crossing Light (HD)		8	EA	$ 134.41	$ 1,075.27		
Pinnacle 5" End Cap		1	EA	$ 9.31	$ 9.31		
Alum. Mast, 5" x 16' Base Hole 0 Degrees & Main Hole 90 Degrees right		2	EA	$ 231.90	$ 463.81		
Signal Mast Grounding w/ 72" pigtail #6 solid		2	EA	$ 48.04	$ 96.09		
JCT. Box Base, 5" W/2"NPT Cap		2	EA	$ 793.61	$ 1,587.23		
2-Way Cross Arm Assembly Less Heads (Gate Flasher)		2	EA	$ 396.33	$ 792.67		
5" Crossarms Assembly Mounting Kit		2	EA	$ 23.39	$ 46.77		
Railroad Crossing Sign, HI		2	EA	$ 77.96	$ 155.91		
5" Mounting Kit for Railroad Crossing Signs w/Extension Bracket		2	EA	$ 57.23	$ 114.45		
Gate **3593E** Mechanism Assembly, including the 5" Mast Mounting Hardware, Flex							
Conduit, with fittings, **Long Arm Supports** & Counterweight kit for 25' - 28' Arms W/Gate Heaters		2	EA	$ 5,403.14	$ 10,806.28		
Gate Heater Thermostat (To Be mounted inside gate mech IORY Projects)		2	EA	$ 34.96	$ 69.91		
Insulated Nut		8	EA	$ 0.73	$ 5.85		
Test Link, 1" Offset w/Gold Nut		36	EA	$ 2.18	$ 78.58		
Wiring Harness 18'6" Bell		1	EA	$ 29.08	$ 29.08		
Wiring Harness 12' Light		2	EA	$ 29.06	$ 58.13		
Wiring Harness 8' Mech (STD)		2	EA	$ 66.77	$ 133.55		
Gate Arm Wind Bracket, 36"		2	EA	$ 73.12	$ 146.24		
Conversion Bracket Plain w/hardware		2	EA	$ 203.23	$ 406.45		
Gate/Flasher Pallet		2	EA	$ 59.14	$ 118.28		
Misc. Signal Material		1	EA	$ 215.05	$ 215.05		
Total Cost For Gate/Flasher Material				$7,994.02	$17,251.91		

Ground Material

Quote Number:	0					
Customer:	Columbus & Ohio River RR					
Road Name:	Thornwood Dr.					
City, State & County:	Heath,(Licking), OH.					
Crossing No.	151801J					
Milepost No.	108.36					
State Project No.	0					
ITEM DESCRIPTION		**QTY**	**U/M**	**UNIT SELL**	**TOTAL SELL**	
Insulated Terminal Wrench, 1/2" / Triangle		1	EA	$ 25.33	$ 25.33	
Plugboard Terminal Wrench		1	EA	$ 64.89	$ 64.89	
Battery Tray (12" x 38")		1	EA	$ 47.31	$ 47.31	
Battery Tray (12" x 24")		3	EA	$ 30.11	$ 90.32	
Battery, 250 Amp Hour, NiCd		10	EA	$ 226.88	$ 2,268.82	
Battery, 340 Amp Hour, NiCd		9	EA	$ 329.03	$ 2,961.29	
Electronic Bell, 5" MTG.		1	EA	$ 209.68	$ 209.68	
Gate Arm Light Kit w/LED Bulbs and wire, Tip Light Only W/Reverse Tip Diode		2	EA	$ 58.06	$ 116.13	
Galv. Steel Gate Foundation - 60" Tall		2	EA	$ 510.75	$ 1,021.51	
5" Jct. Box Base Shroud		2	EA	$ 44.18	$ 88.37	
G&W, Lamp Cord Mounting Clamps	**All G&W**	2	EA	$ 15.05	$ 30.11	
G&W, Lamp Cord Mounting Clamps	**All G&W**	2	EA	$ 15.05	$ 30.11	
G&W Gate Arm 30' or Less, NON-HWP, 16' Al Base sec (HI Intensity), 3' Sleeve	**Needs Mid Section**	2	EA	$ 236.56	$ 473.12	
G&W Gate Arm 30' or Less, NON-HWP, 16' Fg 2nd sec (HI Intensity)	**Needs Base Section**	2	EA	$ 184.95	$ 369.89	
Track Cable, #6 Tw. Pr. (150-12-3933)		250	FT	$ 2.73	$ 682.80	
Signal Cable, 7/C # 6 AWG (206-11-6247)		275	FT	$ 12.47	$ 3,430.11	
Signal Cable, 7/C #14 AWG (206-11-6887)		275	FT	$ 4.17	$ 1,147.31	
AC Meter, 3/C # 9 AWG.(206-11-6923)		275	FT	$ 4.23	$ 1,162.10	
AC Cable, 3/C # 6 AWG w/GRD (206-11-6070)		200	FT	$ 6.60	$ 1,320.43	
Railroad Emergency Contact Sign - Reference Spec Prior to Ordering		2	EA	$ 21.18	$ 42.37	
5" Mounting Kit for Railroad Crossing Signs w/Extension Bracket		2	EA	$ 57.23	$ 114.45	
Hex. Railroad Lock		5	EA	$ 36.83	$ 184.14	
Copperweld Ground Rod, 5/8" X 8'		6	EA	$ 11.82	$ 70.90	
Cadweld One Shot, 5/8" (HALO) Triple		4	EA	$ 12.46	$ 49.85	
Cadweld One Shot, 5/8" (SIGNAL) Single		2	EA	$ 11.24	$ 22.47	
Track Connector, Web, 4"		4	EA	$ 5.11	$ 20.43	
Track Connection Kits		2	EA	$ 58.22	$ 116.43	
Track Wire Retainer Clip, Erico #SBA248B		4	EA	$ 2.31	$ 9.25	
Shunt, NBS-1 (452 Hz)		2	EA	$ 450.54	$ 901.08	
Shunt, NBS-1 (267 Hz)		1	EA	$ 450.54	$ 450.54	
4" PVC Sch. 80 Conduit		125	FT	$ 7.53	$ 940.86	
Hose, Red Ruber 3/4 Inch Hose (15' Per Track Connection Pair)		30	FT	$ 0.86	$ 25.81	
Dress Stone		1	EA	$ 967.74	$ 967.74	
Sleeve, 3/16 - 3/16 & 3/16 - #6 Tinned		4	EA	$ 1.51	$ 6.02	
Duct Seal		10	LB	$ 2.43	$ 24.30	
Bond Strand, Erico# SBS8TLINS664		75	FT	$ 1.22	$ 91.13	
No Oxide Grease		1	EA	$ 41.12	$ 41.12	
Anti-Seize - Silver Grade 4 OZ		1	EA	$ 7.80	$ 7.80	
#6 Bare Copper		50	FT	$ 0.27	$ 13.44	
Field Material Misc. Package		1	Lot	$ 161.29	$ 161.29	
Total Cost For Ground Material				$4,337.27	$19,801.02	

OHIO RAIL DEVELOPMENT COMMISSION
Mail Stop #3140, 1980 West Broad Street, Columbus OH 43223
Mike DeWine, Governor • Mark Policinski, ORDC Chairman

May 22, 2019

Johnny Varner
Assistant Vice President – Regional Engineering
Genesee & Wyoming/CUOH
201 N. Penn St
Punxsutawney, PA 15767

RE: PE Submitted RR Solicit Bids
LIC Thornwood Dr DOT# 151801J PID# 107285

Dear Mr. Varner:

The plan and estimate transmitted May 21, 2019, for the referenced project has been reviewed and is acceptable. Genesee & Wyoming/CUOH may proceed with soliciting bids for the proposed grade crossing warning system in accordance with the abbreviated plan. This authorization is made with the stipulation and understanding that the approved estimate may contain entries for items or activities that may be cited and found to be ineligible for federal participation during the project audit.

A construction authorization will be sent once the bid documents have been received and approved. No field work may be started without a construction authorization from this office.

Sincerely,

Greg Gronbach
Project Manager
Ohio Railroad Development Commission

C: Randall Schumacher, Supervisor, Rail Division, PUCO
Jill Henry, Rail Division Specialist, PUCO
ORDC (file)

OHIO RAIL DEVELOPMENT COMMISSION

Mail Stop #3140, 1980 West Broad Street, Columbus OH 43223

John R. Kasich, Governor • Mark Policinski, ORDC Chairman

June 21, 2018

Christopher Frank
Genesee & Wyoming/CUOH
4349 Easton Way, ste. 110
Columbus, OH 43219

RE: Licking County, Thornwood Drive
DOT# 151801J, PID# 107285

Dear Mr. Frank:

A diagnostic review was held at the above grade crossing on December 14, 2017. The crossing has been recommended for an upgrade to the lights and gates.

Columbus & Ohio River Railroad (CUOH) is authorized to proceed with the site plans and cost estimates or bid package for this project. This authorization is made with the stipulation and understanding that any field work needs prior approval before work begins. This authorization is made with the stipulation and understanding that an approved estimate may contain entries for items or activities that may be cited and found to be ineligible for federal participation during the project audit. Please note that the railroad must provide ORDC with a plan stamped by a professional engineer licensed in the State of Ohio prior to acceptance and close out of the project.

The diagnostic review form is attached. Please note any recommendations (page 5), if any, made by the team with regard to requirements for this location. Any minor roadway work necessary for MUTCD compliance should be incorporated into the PE and such costs will flow through the railroad reimbursement process.

The Project Manager for this project is James Tucker. James can be reached at (614) 398-6897, or james.tucker@dot.ohio.gov, if you have any questions.

Sincerely,

Project Manager

C: Randall Schumacher, Supervisor, Rail Division, PUCO
Jill Henry, Rail Division Specialist, PUCO
Susan Arduini, ORDC
ORDC (file)

Attachment: 1 (diagnostic review form)

OHIO RAIL DEVELOPMENT COMMISSION

Mail Stop #3140, 1980 West Broad Street, Columbus OH 43223
John R. Kasich, Governor • Mark Policinski, ORDC Chairman

January 12, 2018

Christopher Frank
Genesee & Wyoming/CUOH
4349 Easton Way, Ste. 110
Columbus, OH 43219

Subject: Grade Crossing Warning Device Improvement
Licking County, Thornwood Drive
US DOT # 151801J, PID 107285

Dear Mr. Frank:

A diagnostic review was conducted at the Thornwood Drive, DOT # 151801J, crossing on December 14, 2017. As a result of the review, we will upgrade the flashing lights and roadway gates.

This project shall be completed in compliance with Agreement No. 0009-A dated May 28, 2001, entered into by the State of Ohio and Columbus and Ohio River Railroad (CUOH) and incorporated as if fully rewritten herein. This construction shall also meet the general terms and conditions under the Moving Ahead for Progress in the 21st Century Act (MAP-21) and subsequent amendments and the State of Ohio's Federally Funded Warning Device Program.

Preliminary engineering (PE) and construction costs shall be borne one hundred percent (100%) by ORDC. Reimbursable costs will be limited by the ORDC based on approved estimates and bid tabulations, if applicable. These limits will be quantified by the ORDC in its construction authorization to CUOH and may be amended by the ORDC based on revised estimates and bid tabulations.

This Letter Agreement and the approved plans constitute the scope of the project. CUOH shall notify ORDC in writing of any changes in the scope of work which are not in the approved plans and estimates and secure approval in writing of same before the work is performed.

PE will not be commenced by CUOH prior to ORDC issuing a PE authorization. PE and project estimate will be submitted by CUOH to ORDC within ninety (90) days or other time specified by ORDC in the PE authorization. Construction will not be commenced by CUOH prior to ORDC issuing a construction authorization. Construction will be completed by CUOH within nine (9) months or other time specified in the time specified by ORDC in the construction authorization.

Please indicate your acceptance of the terms and conditions of this Letter Agreement by signing and returning one (1) copy to me at the address listed above and retain a copy for your files. This Agreement may be executed in one or more counterparts, each of which shall be deemed to be a duplicate original, but all of which taken together shall be deemed to constitute a single Agreement.

Sincerely,

Matthew R. Dietrich
Executive Director

Columbus and Ohio River Railroad:

By: _____

Title: President

Date: 5/31/18

By: _____

Title: _____

Date: _____

LIC Thornwood Dr CUOH PID 107285 151801J

OHIO RAIL DEVELOPMENT COMMISSION

Ohio Rail Development Commission
Mail Stop 3140, 1980 W. Broad Street,
Columbus, OH 43223

Diagnostic Review Team Survey

Reason for Survey:
(e.g. formula, accident, constituent, etc.)

Date: 12/14/2017

Location Data

Street or Road Name:	Thornwood Drive
Route/Road Number (i.e. Twp., Co., SR or US)	
US DOT No.:	151801J
County:	LIC
Township:	
City: (In or Near)	City of Heath
Railroad Name:	Columbus & Ohio River
Railroad Division:	Louisville
Branch/Line Name:	
Nearest RR Timetable Station:	Heath
RR Milepost:	108.36

On-Site Review Team

(Include: Name – Organization – Phone Number – Email)

1. Eric T. Neff ORDC 614-749-6760 ericneff@dot.ohio.gov
2. Eddie Heath 740 522-1420 x210 ehunt@heathohio.gov
3. Jill Henry PUCO 614-466-0435 jill.henry@puco.ohio.gov
4. Gary Hornsley OHCR 740-502-7214 ghonsley@GWRR
5. Dan Birrell CUOH 740 295 4122 dbirrell@GWRR.com
6. Jared Knerr Licking Co Engr. 740-670-5292 jknerr@liccounty.com
7. Brian Moreheads Newark City Engr 740-670-7225 bmorehead@newarkohio.net
8.
9.

Existing Traffic Control Devices

Type of Warning Devices	Installed?		Quantity/Comments
Advance Warning Signs (condition?)	☑ Yes	☐ No	
'Stop' Signs	☐ Yes	☑ No	
'Stop Ahead' Signs	☐ Yes	☑ No	
Pavement Markings (condition?)	☑ Yes	☐ No	
Crossbucks	☑ Yes	☐ No	
Number of Tracks Signs	☐ Yes	☑ No	
Inventory Tags	☑ Yes	☐ No	
Interconnected Highway Traffic Signal	☐ Yes	☑ No	
Mast-Mounted Flashing Lights	☑ Yes	☐ No	
Cantilever Flashing Lights	☐ Yes	☑ No	Number: Length:
Side Lights	☐ Yes	☑ No	
Automatic Gates	☑ Yes	☐ No	Number: Length:
Bells	☑ Yes	☐ No	Number: 2
Sidewalk Gate Arms	☐ Yes	☑ No	
'No Turn' Signs	☐ Yes	☑ No	
Illumination	☐ Yes	☑ No	
Is crossing flagged by train crew?	☐ Yes	☑ No	
Other	☐ Yes	☐ No	

UPDATED (04/2013)

Safety Data (Obtain crash reports, if possible, prior to review)

	Initial Information (from database)	Revised
Number & dates of crashes in previous 5 years	0	
Hazard Ranking	1369 Date Run: 11/30/2017	

Railroad Data

Railroad Characteristics	Initial Information (from database)	Revised
Total trains per day	14	
< 1 per day		
Day thru trains	5	
Night thru trains	5	
Daytime switching movements	2	
Nighttime switching movements	2	
Total number of tracks	1	
Number of main tracks	1	
Number of other tracks	0	
Maximum train speed	~~40~~ 30	30 per RR
Typical train speed	~~40~~ 30	30 per RR
Amtrak		

If non-gated crossing, is clearing sight distance adequate in all quadrants? (See Table 1) ☐ Yes ☐ No N/A

If multiple tracks, can two trains occupy crossing at the same time? ☐ Yes ☑ No

Can one train block the motorists' view of another train at crossing? ☐ Yes (Explain below) ☑ No

Can one or more tracks be eliminated through the crossing? ☐ Yes ☑ No

Are there other track(s) crossing this same roadway within 100 ft of this crossing? ☐ Yes ☑ No

If yes, Crossing DOT #(if different) _____

If yes, distance _____ (take measurement between track centerlines at closest point along roadway)

Roadway Data

Local Highway Authority: City of Heath

Roadway Characteristics	Initial Information (from database)	Revised
Average daily traffic	2895 (2005) City to fund	
Highway paved	X Yes ☐ No	☐ Yes ☐ No

Roadway Surface: ☑ Blacktop ☐ Gravel ☐ Concrete ☐ Other _____

Roadway width: 20 ft.

Number of highway lanes	2	
Urban or Rural	Rural	
Vehicle Speed: 45 MPH		

School Bus Operation: ☐ No ☑ Yes ____ Amount

Hazardous Materials Trucks: ☐ No ☐ Yes .05 Amount

Shoulders: ☑ No ☐ Yes

Is the shoulder surfaced? ☑ No ☐ Yes

Is there existing guardrail along roadway in crossing vicinity? ☑ No ☐ Yes

Is stopping site distance adequate? (See Table 2) ☑ Yes ☐ No If no, deficient approach(es) _____

410'

Quadrant NW Curb and Gutter:	Quadrant ~~SW~~ SE Curb and Gutter:
☐ Functional (Curb height = 4" or more)	☐ Functional (Curb height = 4" or more)
☐ Non-functional (Curb height = Less than 4")	☐ Non-functional (Curb height = Less than 4")
☑ None	☑ None

Pedestrians: ☑ No ☐ Yes

Is sidewalk present? ☑ No ☐ Yes

Is there a nearby intersection that could cause queuing over the crossing? ☑ No ☐ Yes

If yes,

Distance N/A

Is this intersection signalized? ☑ No ☐ Yes

Are the signals currently interconnected with the existing crossing warning devices? ☑ No ☐ Yes

Is there a 'Do not Stop on Track' sign? ☑ No ☐ Yes

Is a roadway improvement project (e.g. widening, turn lanes, nearby new or upgraded traffic signal, sidewalk) planned at or near this location in the foreseeable future? ☐ No ☑ Yes

If yes,

Improvement type_____ Lead Agency _____ Timeline/completion - _____

Is it the consensus of the Diagnostic Review Team that this is a potential closure project: ☑ No ☐ Yes

Explain reasons:

Type of Development

☑ Open Space	☐ Institutional	Location of nearby schools:
☑ Industrial	☐ Commercial	
☐ Residential		

Utility Information

Is commercial power available? ☐ No ☑ Yes

Utility Provider (Company Name) TBD Phone Number _____

Nearest Available Power Source _____

What other utilities are present? (add locations to sketch)
☐ Gas ☐ Cable ☐ Telephone ☐ Fiber Optic Cable
☐ Petroleum ☐ Water ☐ Sanitary Sewer
☐ Other _____

Is(are) there potential utility conflict(s) ☐ Yes ☐ No ☑ Unknown

Comments:

Potential Red Flags / Project Challenges
Traffic Signal Preemption (include traffic signal intersection name and LHA with jurisdiction over traffic signal, if known):
Crossing Consolidation or Closure:
Real Estate or ROW: City/County may be purchasing adjacent property for road project. Will not affect or be part of crossing improvement.
Culverts / Drainage / Ballast Conditions:
Roadway and/or Sidewalks:
Circuitry (e.g. reaches out to other crossings, specific needs, etc.):
Environmental:
Other:

Diagnostic Team Recommendations

	Quadrants Needed
☑ Install/upgrade active devices	
☐ Automatic Flashing Lights (AFLS)	
☐ AFLS /Cants	
☑ AFLS / Gates	
☐ AFLS / Gates / Cants	
☑ Bells / number	1
☐ Upgrade circuitry / type	
☐ Sidelights	
☐ Guardrail Needed	
☐ Install/Replace curb	
☑ Bungalow placement & offset from rail & highway	SE
☐ Other (define)	

Comments:

☐ Install/upgrade traffic signal preemption	
☐ No improvements needed	

☐ Other (define)

Acknowledgement of Recommendations (each entity represented at the diagnostic must have at least one signature acknowledgement):

[illegible]	[illegible]	BM
[illegible]	JNK DRB	GPH

Field Dimensions

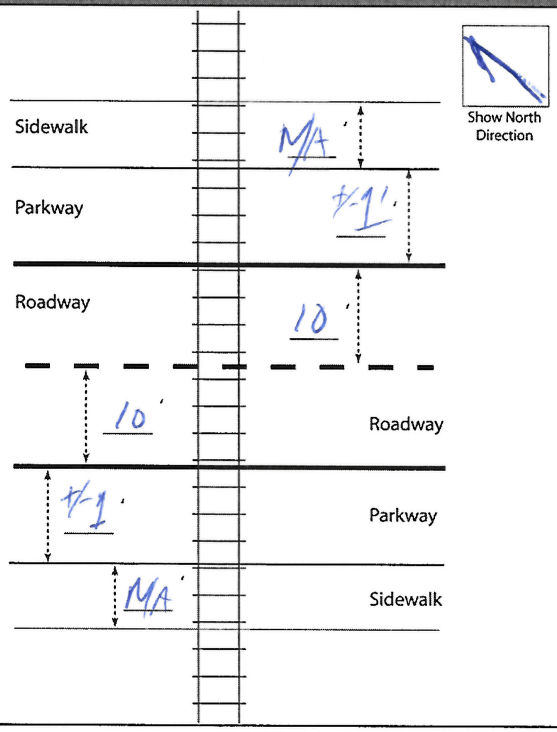

Untitled Map

LIC - Thornwood Drive, DOT # 151801J

Field Sketch

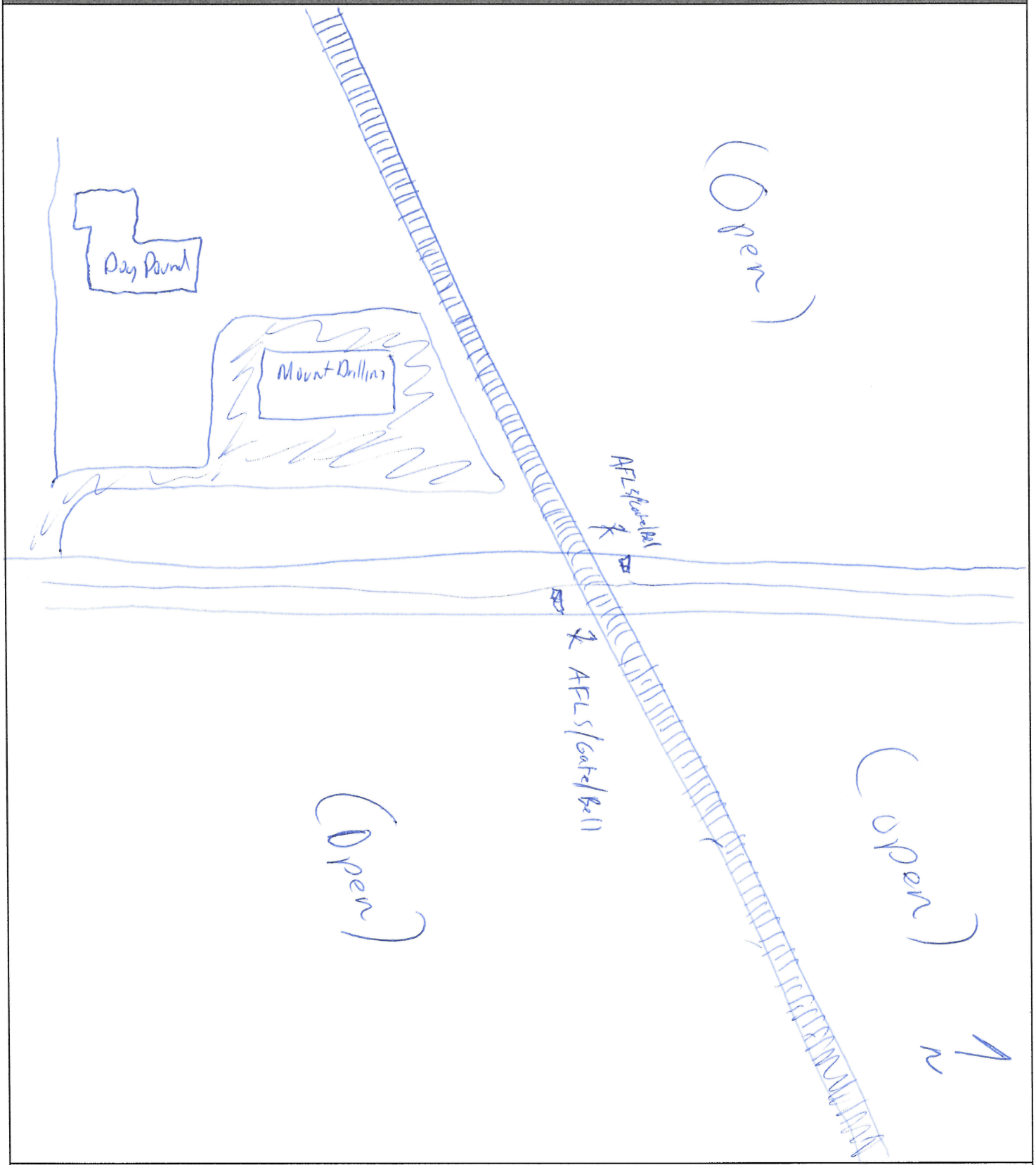

Crossing Angle ☐ 0-29° ☐ 30-59° ☑ 60-90° Measured in SW Quadrant?

Sketch by: [illegible]

Table 1

Clearing Sight Distances

Maximum Authorized Train Speed	Distance (dT) Along Railroad from Crossing (ft)
1 - 10	240
15	360
20	480
25	600
30	720
35	840
40	960
45	1080
50	1200
55	1320
60	1440
65	1560
70	1680
75	1800
80	1920
85	2040
90	2160

Source: R-H Grade Crossing Handbook Table 36 (pp. 132-133)

Notes:

All calculated distances are rounded up to the next higher 5-foot increment.

Distances indicated are for 65-ft double bottom semi-tractor trailers and level single track 90 degree crossings; and may need to be adjusted for multiple tracks, skewed crossings or approaches on grades.

Clearing Sight Distance is to be measured in each vehicle travel direction at non-gated crossings as viewed from a point 25 feet from centerline of nearest track in the center of whichever travel lane is nearest the direction along track being measured.

Table 2

Stopping Sight Distances

Highway Vehicle Speed	Distance (dH) Along Roadway from Crossing (ft)
0	n/a
5	50
10	70
15	105
20	135
25	180
30	225
35	280
40	340
45	410
50	490
55	570
60	660
65	760
70	865

Source: R-H Grade Crossing Handbook Table 36 (pp. 132-133)

Notes:

All calculated distances are rounded up to the next higher 5-foot increment.

Distances indicated are for 65-ft double bottom semi-tractor trailers on dry level pavements.

Stopping Sight Distance is to be measured on each roadway approach to crossing from stop bar.

This foregoing document was electronically filed with the Public Utilities

Commission of Ohio Docketing Information System on

7/15/2019 8:08:16 AM

in

Case No(s). 19-1451-RR-FED

Summary: Application In the Matter of a Request for the Upgrade of Active Warning Devices at the Columbus & Ohio River Railroad Crossing, Thornwood Drive DOT#151-801J in Licking County, Ohio. electronically filed by Mrs. Jill A Henry on behalf of PUCO/Rail Division