Public Utilities
Commission of Ohio

Memo

To: Docketing Division

From: Jill Henry, Rail Specialist, Rail Division

Cc: PUCO Legal Department

Date: 9/12/18

Re: PUCO Case No. 18-1420-RR-FED- In the Matter of a Request for the Installation of Active Warning Devices at the Norfolk Southern Railway Crossing, Essick Road/TR 704 DOT#544-878J, in Columbiana County, Ohio.

On March 19, 2018, the Ohio Rail Development Commission (ORDC) authorized funding for Norfolk Southern Railway to install active warning devices at Essick Road/TR 704 DOT#544-878J in Tuscarawas County, Ohio. The crossing was surveyed, on October 13, 2017, and found to warrant the upgrade. The electric utility provider for this crossing is Ohio Edison-First Energy Corp.

The project will be paid for with federal funds and is actual cost. The plans and estimates in the amount of $324,669.00 have been approved. Construction may commence at once. **Staff requests a Finding & Order with completion of the project in twelve months.** Staff requests that the following language be incorporated in the Finding & Order:

It is expected that all work necessary for FHWA acceptance of the warning devices will be completed by the in-service due date and that the <u>railroad will be responsible</u> for this work. This work includes, but is not limited to:

- **Any ancillary work to make the warning devices function as designed and visible to the roadway user, and**
- **MUTCD compliance, including minor roadway work if necessary.**

Please serve the following parties of record:

Norfolk Southern Railway Company
Kurt Young
Public Projects Engineer
1200 Peachtree Street NE
Box 123
Atlanta, GA 30309-3597

Norfolk Southern Railway Company
Cayela Wimberly
Director Grade Crossing Safety
1200 Peachtree Street NE
Atlanta, GA 30309-3597

Eastman & Smith LTD.
Casey Talbott
Attorney for Norfolk Southern
One SeaGate 24th Floor
P.O. Box 10032
Toledo, OH 43699-0032

Ohio Rail Development Commission
Cathy Stout
Safety Manager
1980 West Broad Street
Mail Stop #3140
Columbus, OH 43223

Columbiana County Engineer
William Helscel
Chief Deputy Engineer
235 S. Market Street
Lisbon, OH 44432

West Township, Columbiana County
Trustees
8610 Knox School Road
Minerva, OH 44657

Ohio Edison- First Energy Corp.

OHIO RAIL DEVELOPMENT COMMISSION
INTER-OFFICE COMMUNICATION

TO: **Randall Schumacher, Supervisor, Rail Division, PUCO**

FROM: **Cathy Stout, Manager, Safety Section, ORDC**

BY: **James Tucker, Project Manager, ORDC**

SUBJECT: **Columbiana County, TR 704/Essick Rd, Norfolk Southern DOT#544878J, PID#107031**

DATE: **September 12, 2018**

The Ohio Rail Development Commission (ORDC) established a diagnostic survey at the subject location on October 13, 2017. The Diagnostic Team recommended that the crossing be upgraded to flashing lights and roadway gates. Copies of the diagnostic review form and the plan and estimate are attached.

PE has already been provided by the railroad. ORDC approves the site plans and estimates as provided. Please issue a construction-only order for the project outlined above for twelve months. This construction authorization is made with the stipulation and understanding that any field work needs prior approval before work begins. This authorization is made with the stipulation and understanding that an approved estimate may contain entries for items or activities that may be cited and found to be ineligible for federal participation during the project audit.

It is expected that all work necessary for FHWA acceptance of the warning devices will be completed by the in-service due date and that the railroad will be responsible for this work. This work includes, but is not limited to:

- Any ancillary work to make warning devices function as designed and visible to the roadway user, and
- MUTCD compliance – including minor roadway work if necessary.

Thank you for your assistance with these matters.

Attachment: Diagnostic Review
Plan & Estimate

c: Jill Henry, PUCO
Susan Arduni, ORDC
ORDC Project Manager (file)

OHIO RAIL DEVELOPMENT COMMISSION

Mail Stop #3140, 1980 West Broad Street, Columbus OH 43223
John R. Kasich, Governor • Mark Policinski, ORDC Chairman

September 12, 2018

Mr. Kurt Young
Public Projects Engineer
1200 Peach Street NE, Box 123
Atlanta, Ga. 30309

RE: Columbiana County, TR 704/Essick Rd, DOT #544878J
PID#107031, NS Project 10.3194

Dear Mr. Young:

The plan and estimate dated July 18, 2018, for the referenced project has been reviewed and is acceptable. **Please note that the railroad must provide ORDC with a plan stamped by a professional engineer licensed in the State of Ohio prior to acceptance and close out of the project.** Norfolk Southern (NS) may proceed with the construction of the proposed flashing lights and gate roadway gates in accordance with the abbreviated plan. This authorization is made with the stipulation and understanding that the approved estimate may contain entries for items or activities that may be cited and found to be ineligible for federal participation during the project audit. Reimbursement of eligible actual cost from ORDC is limited to $324,669.00. Additional costs must be approved in writing by the Ohio Rail Development Commission (ORDC) prior to being incurred. Emergency verbal authorizations by ORDC may be permitted and will be confirmed by ORDC in writing within ten (10) business days of the verbal approval.

This authorization is contingent upon NS accepting the following instructions:

1. NS's project foreman will furnish written notification five (5) working days prior to the date work will start at the project site to James Tucker, ORDC, email james.tucker@dot.ohio.gov and to the Public Utilities Commission of Ohio at jill.henry@puco.oh.gov NS's project foreman will also notify the same of any stops and re-starts of the work activity and of the date work was completed for the project.

2. NS will arrange for utilities to be located at the project site by the Ohio Utilities Protection Service (OUPS) prior to any construction activities at the site. Utilities that are not participating members of the service must be contacted directly by NS.

3. NS's project foremen will notify James Tucker at 614-398-6897 (telephone) or james.tucker@dot.ohio.gov (email) of any changes in the scope of work, cost overruns, material changes, etc. which are not included in the approved plan and estimate and secure approval of same before the work is performed.

4. Open cut of roadways is not permitted except in unusual circumstances and must be coordinated with the local highway authority and preapproved by ORDC.

5. NS will furnish two (2) copies of each partial bill to ORDC. Please find the enclosed ODOT Purchase Order to reference when billing.

6. NS will furnish two (2) copies of the final all-inclusive bill to ORDC stating the exact dates of starting and completing work, the initial and final dates of construction and location where the accounts may be audited.

7. This installation will include any ancillary work to make the warning devices function as designed and meet MUTCD.

Thank you for your assistance with these matters.

Sincerely,

James Tucker
Project Manager

C: Randall Schumacher, Rail Division Supervisor, PUCO
Jill Henry, Grade Crossing Planner, PUCO
Susan Arduini, ORDC
ORDC (file)

18-Jul-18

Detailed Estimate for Grade Crossing Warning Devices

City/State: HOMEWORTH, OH
MilePost: RD-56.87
State Proj. No.: PID 107031
S&E Proj. No.: 10.3194
Man Days: 168

Road: ESSICK RD (TR 703)
DOT/AAR: 544878J
County: COLUMBIANA
File Number:

*****Purchases - Others*****		
Meals and Lodging:	$22,979.98	
Rental of Equipment:	$31,413.55	
(2 Trucks, 1 Backhoe w/ Trailer and 1 Pipe-Pusher for 28 Days)		
Construction Supervision Vehicle:	$4,805.22	
Purchases - Other Total:		$59,198.75
*****Material And Additives*****		
Material Cost:	$111,883.00	
Sales and Use Tax:	$8,951.00	
Material Handling Freight:	$11,188.29	
Material Total:		$132,022.29
*****Labor And Additives*****		
Labor Cost:	$54,096.00	
(6 man crew at $1,932.00 a day for: 28 days)		
Payroll Tax & Overheads:	$46,122.25	
Preliminary Engineering:	$17,427.79	
Construction Supervision:	$15,801.44	
Labor Total:		$133,447.48
	Project Cost:	$324,668.52
	Scrap / Salvage Credit:	$0.00
	Project Total:	**$324,669.00**

Estimated on: 18-Jul-18

Estimated by: q2suj

Estimate valid for 1 year from date of estimate

SH. NO.	CONTENTS
NX1	INDEX SHEET
NX2	OUT OF SERVICE (OOS) INSTRUCTIONS
1	LAYOUT
2	PROFILE
3	CABLE PLAN
4	LOAD CENTER
5	B12 & B16 CHARGERS & BATTERIES
6	4000 GCP 2-TK CHASSIS & MODULE LAYOUT
7	4000 GCP PROGRAMMING SETUP
8	4000 GCP PROGRAMMING SETUP
9	CONNECTORS FOR TRACK MODULES
10	CPU MODULE, SEAR III & VHF HOOK-UPS
11	SEAR III PROGRAMMING SETUP
12	SSCC#1 MODULE HOOK-UP
13	SSCC#2 MODULE HOOK-UP
14	SIGNAL "A" S40 GATE & FLASHER CIRCUITS
15	SIGNAL "B" S40 GATE & FLASHER CIRCUITS
16	BACKBOARD 1A & 1B
17	REAR BACKBOARD 1A & 1B
18	FARADAY SHIELD 1A & 1B
19	FARADAY SHIELD 1C
20	HOUSE SIDE C LAYOUT & RACK PLACEMENT
21	HOUSE SIDE A LAYOUT
22	HOUSE SIDE B LAYOUT & TOP VIEW

INDEX SHEET

DESIGNED BY: TAH 06-15-18	NORFOLK SOUTHERN	
DRAWN BY: RSD 06-15-18	OFFICE OF ASS'T. VICE PRESIDENT COMM. & SIGNAL, ATLANTA, GA.	M.P.: RD-056.87
CHECKED BY: BES 06-15-18	HOMEWORTH, OH FLGS AT ESSICK RD. (TR 703)	
IN SERVICE: - -	CLEVELAND LINE	FILE No. R-
	CADD or DWG. No. 24260569.NX1	SHEET No. 1 of 1

REVISION INITIALS											

PROPERTY
PENNSYLVANIA R. R.

TAKING TRACK(S) OUT OF SERVICE (OOS):

SP-1001 MUST BE COMPLIED WITH

THE OUT OF SERVICE MENU IS ACCESSED ON THE DISPLAY BY TOUCHING THE DESIRED TRACK IN THE TRACK STATUS WINDOW ON THE DISPLAY. SELECT OUT OF SERVICE FROM THE DROP DOWN MENU.

PLACE A JUMPER ACROSS THE OOS TERMINALS SHOWN IN THE PLANS.

SP-1001 MUST BE COMPLIED WITH

SELECT "TAKE GCP OUT OF SERVICE."

ONCE THE GCP APPROACH IS TAKEN OUT OF SERVICE, IF AN ISLAND EXISTS, THE OPTION TO "TAKE ISL OUT OF SERVICE" IS PRESENTED. IF THE ISLAND IS LEFT IN SERVICE, THE CROSSING WILL ACTIVATE IF THE ISLAND IS OCCUPIED.

IF DESIRED, SELECT "TAKE ISL OUT OF SERVICE."

THE TRACK IS NOW OUT OF SERVICE. WHEN THE OUT OF SERVICE SCREEN IS CLOSED, THE DISPLAY RETURNS TO THE TRACK STATUS SCREEN. NOTE THAT THE OUT OF SERVICE TRACK IS ALTERNATELY FLASHING DARK GRAY AND LIGHT BLUE.

REPEAT FOR ADDITIONAL TRACKS IF NEEDED.

PUTTING TRACK(S) BACK IN SERVICE:

SP-1001 MUST BE COMPLIED WITH

REMOVE THE JUMPER ACROSS THE OOS TERMINALS SHOWN IN THE PLANS.

SP-1001 MUST BE COMPLIED WITH

OUT OF SERVICE (OOS) INSTRUCTIONS

DESIGNED BY: TAH 06-15-18	NORFOLK SOUTHERN	
DRAWN BY: RSD 06-15-18	OFFICE OF ASS'T. VICE PRESIDENT COMM. & SIGNAL, ATLANTA, GA.	M.P.: RD-056.87
CHECKED BY: BES 06-15-18	HOMEWORTH, OH FLGS AT ESSICK RD. (TR 703)	
IN SERVICE: - -	CLEVELAND LINE	FILE No. R-
	CADD or DWG. No. 24260569.NX2	SHEET No. 1 of 1

REVISION INITIALS											

PROPERTY
PENNSYLVANIA R. R.

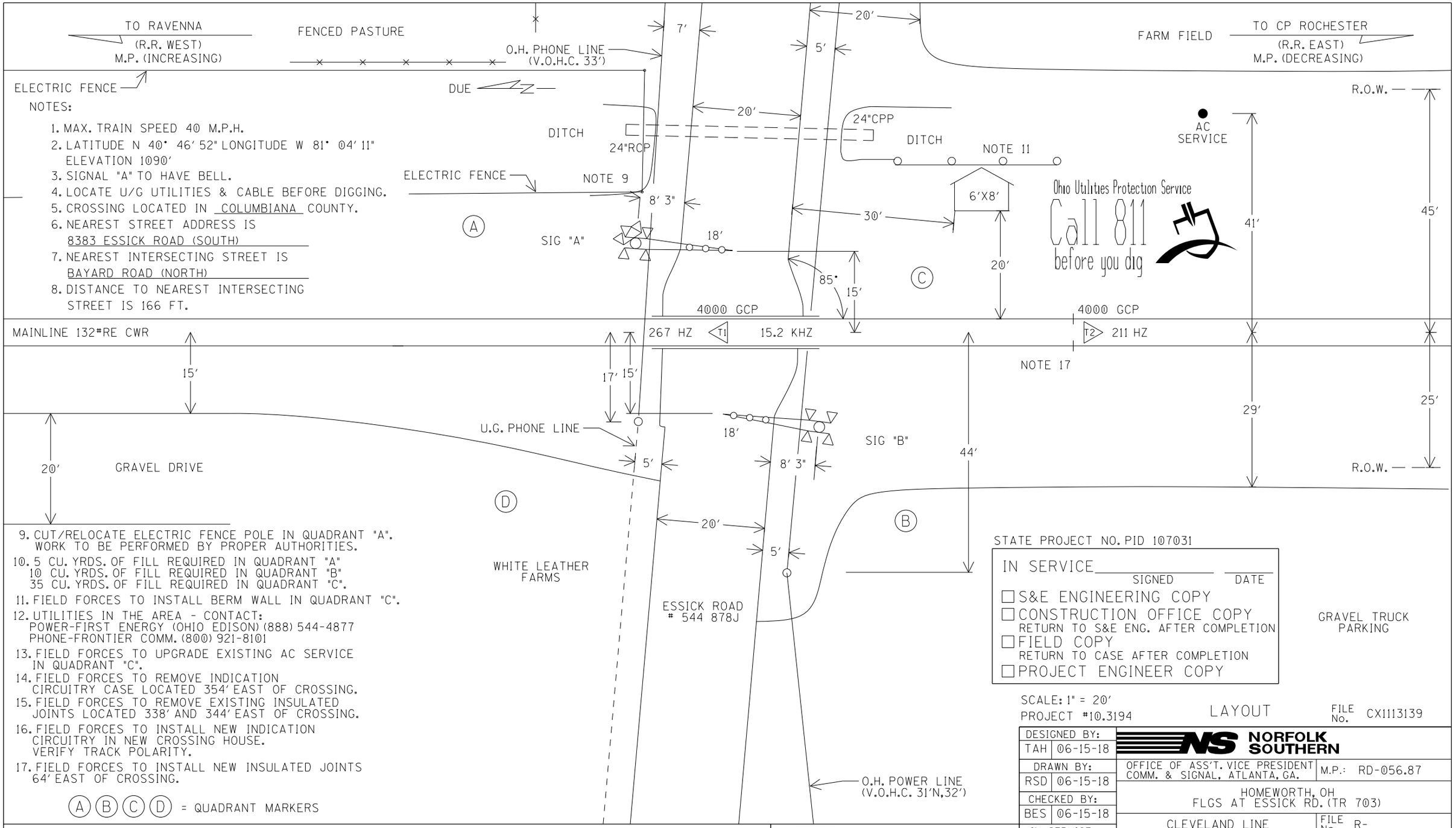

NOTES:

1. MAX. TRAIN SPEED 40 M.P.H.
2. LATITUDE N 40° 46' 52" LONGITUDE W 81° 04' 11"
   ELEVATION 1090'
3. SIGNAL "A" TO HAVE BELL.
4. LOCATE U/G UTILITIES & CABLE BEFORE DIGGING.
5. CROSSING LOCATED IN COLUMBIANA COUNTY.
6. NEAREST STREET ADDRESS IS
   8383 ESSICK ROAD (SOUTH)
7. NEAREST INTERSECTING STREET IS
   BAYARD ROAD (NORTH)
8. DISTANCE TO NEAREST INTERSECTING
   STREET IS 166 FT.
9. CUT/RELOCATE ELECTRIC FENCE POLE IN QUADRANT "A".
   WORK TO BE PERFORMED BY PROPER AUTHORITIES.
10. 5 CU. YRDS. OF FILL REQUIRED IN QUADRANT "A"
    10 CU. YRDS. OF FILL REQUIRED IN QUADRANT "B"
    35 CU. YRDS. OF FILL REQUIRED IN QUADRANT "C".
11. FIELD FORCES TO INSTALL BERM WALL IN QUADRANT "C".
12. UTILITIES IN THE AREA - CONTACT:
    POWER-FIRST ENERGY (OHIO EDISON) (888) 544-4877
    PHONE-FRONTIER COMM. (800) 921-8101
13. FIELD FORCES TO UPGRADE EXISTING AC SERVICE
    IN QUADRANT "C".
14. FIELD FORCES TO REMOVE INDICATION
    CIRCUITRY CASE LOCATED 354' EAST OF CROSSING.
15. FIELD FORCES TO REMOVE EXISTING INSULATED
    JOINTS LOCATED 338' AND 344' EAST OF CROSSING.
16. FIELD FORCES TO INSTALL NEW INDICATION
    CIRCUITRY IN NEW CROSSING HOUSE.
    VERIFY TRACK POLARITY.
17. FIELD FORCES TO INSTALL NEW INSULATED JOINTS
    64' EAST OF CROSSING.

(A) (B) (C) (D) = QUADRANT MARKERS

STATE PROJECT NO. PID 107031

IN SERVICE _____ _____
SIGNED DATE

☐ S&E ENGINEERING COPY
☐ CONSTRUCTION OFFICE COPY
RETURN TO S&E ENG. AFTER COMPLETION
☐ FIELD COPY
RETURN TO CASE AFTER COMPLETION
☐ PROJECT ENGINEER COPY

SCALE: 1" = 20'
PROJECT #10.3194

LAYOUT

FILE No. CX1113139

DESIGNED BY: TAH	06-15-18
DRAWN BY: RSD	06-15-18
CHECKED BY: BES	06-15-18
IN SERVICE:	- -

NORFOLK SOUTHERN

OFFICE OF ASS'T. VICE PRESIDENT COMM. & SIGNAL, ATLANTA, GA.

M.P.: RD-056.87

HOMEWORTH, OH
FLGS AT ESSICK RD. (TR 703)

CLEVELAND LINE

FILE No. R-

CADD or DWG. No. 24260569.01

SHEET No. 1 of 22

REVISION INITIALS

PROPERTY
PENNSYLVANIA R. R.

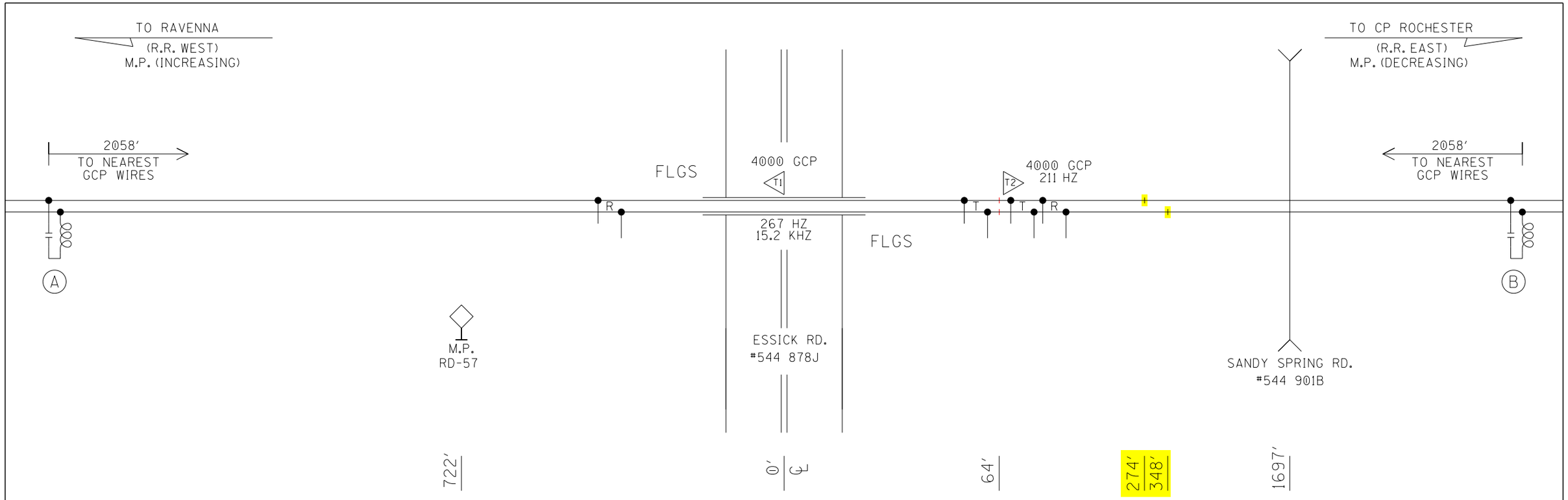

RED-IN
YELLOW-OUT

(A)- MF-NBS FSS-1B 250849-001 (267HZ)

(B)- MF-NBS FSS-1E 250849-004 (211HZ)

PROFILE

DESIGNED BY: TAH 06-15-18	NORFOLK SOUTHERN	
DRAWN BY: RSD 06-15-18	OFFICE OF ASS'T. VICE PRESIDENT COMM. & SIGNAL, ATLANTA, GA.	M.P.: RD-056.87
CHECKED BY: BES 06-15-18	HOMEWORTH, OH FLGS AT ESSICK RD. (TR 703)	
IN SERVICE: - -	CLEVELAND LINE	FILE No. R-
	CADD or DWG. No. 24260569.02	SHEET No. 2 of 22

REVISION INITIALS										

PROPERTY
PENNSYLVANIA R. R.

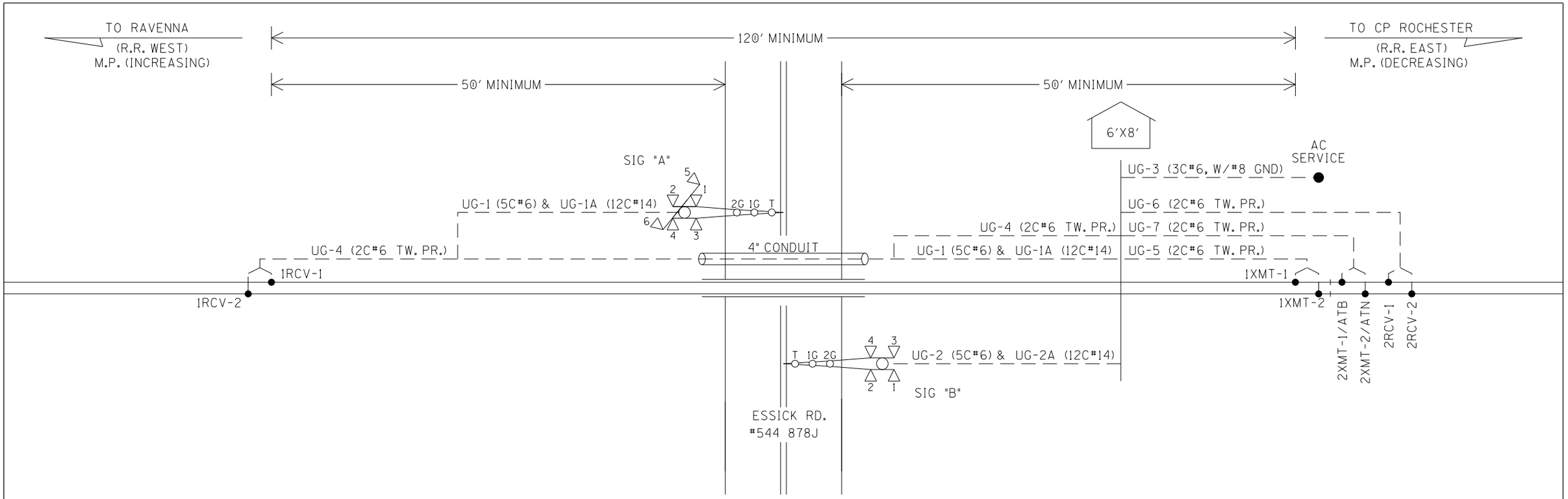

UG-1-5CUG #6

AEC
AEZ
AEB
B16-A
N16-A

UG-2-5CUG #6

BEC
BEZ
BEB
B16-B
N16-B

UG-1A-12CUG #14

NAXG
AXG
1AXX
AXX
XGP1
AGD
AGBX120
AGNX120
SPARE
SPARE
SPARE
SPARE

UG-2A-12CUG #14

NBXG
BXG
1BXX
BXX
XGP1
XGP
BGD
BGBX120
BGNX120
SPARE
SPARE
SPARE

UG-3-3CUG #6 W/#8 GND

BX120-A
BX120-B
NX120
GND

UG-4-TW. PR. #6

1RCV-1
1RCV-2

UG-5-TW. PR. #6

1XMT-1
1XMT-2

UG-6-TW. PR. #6

2RCV-1
2RCV-2

UG-7-TW. PR. #6

2XMT-1/ATB
2XMT-2/ATN

CABLE PLAN

DESIGNED BY: TAH 06-15-18	NORFOLK SOUTHERN
DRAWN BY: RSD 06-15-18	OFFICE OF ASS'T. VICE PRESIDENT COMM. & SIGNAL, ATLANTA, GA. — M.P.: RD-056.87
CHECKED BY: BES 06-15-18	HOMEWORTH, OH FLGS AT ESSICK RD. (TR 703)
IN SERVICE: - -	CLEVELAND LINE — FILE No. R-
	CADD or DWG. No. 24260569.03 — SHEET No. 3 of 22

REVISION INITIALS

PROPERTY
PENNSYLVANIA R.R.

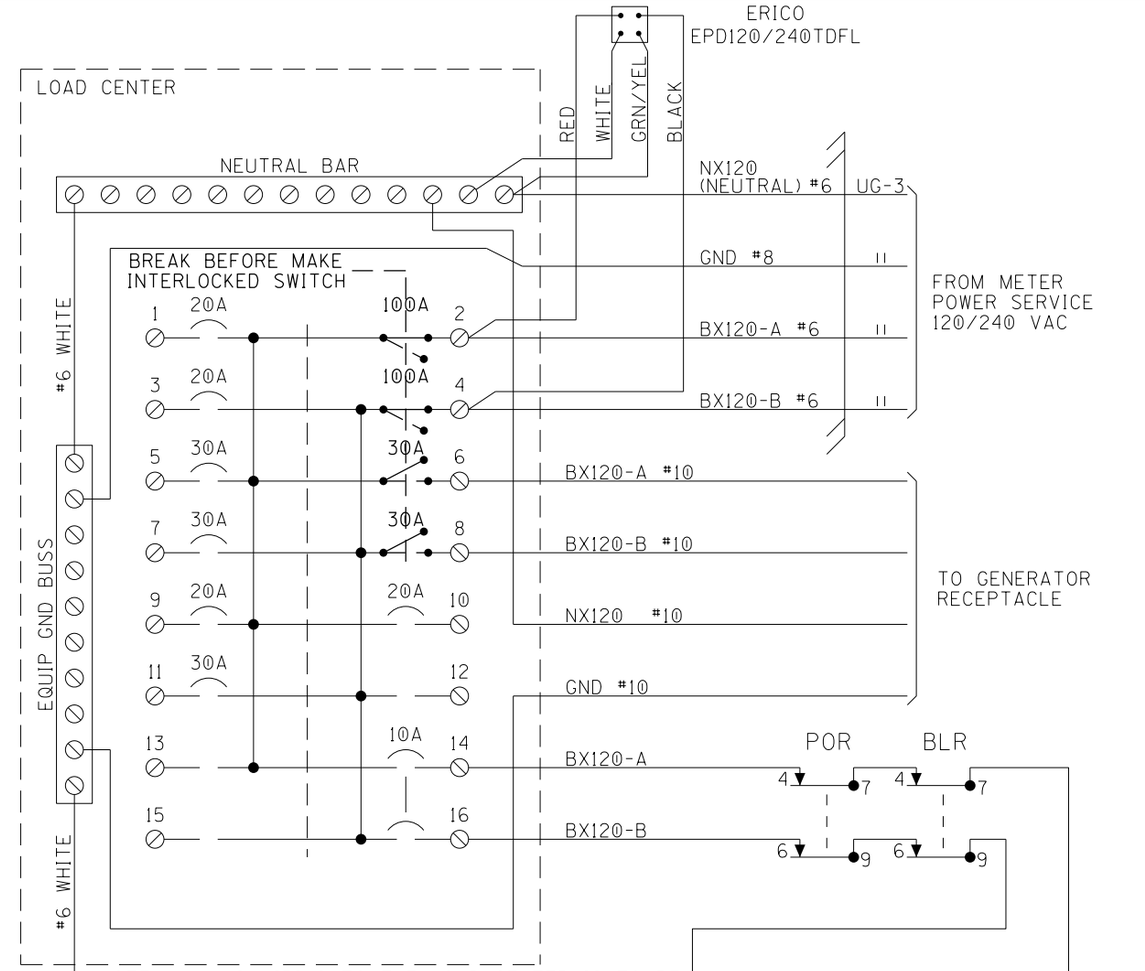

NOTE: ALL AC WIRING TO THE LOAD CENTER IS TO BE IN METALLIC CONDUIT WITH NO EXPOSED TERMINALS. ALL AC 120V AND 240V EQUIPMENT IS TO BE PROPERLY GROUNDED.

SQUARE "D" PART NUMBERS:

LOAD CENTER——Q0116L125G
10A 2P CIR BKR——Q0210
20A 1P CIR BKR——Q0120
30A 1P CIR BKR——Q0130
30A 2P CIR BKR——Q0230
100A 2P CIR BKR——Q02100
MECH INTERLOCK——PK4DTIM4LA

GENERATOR RECEPTACLE:
MALE CONNECTOR - NEMA L1430-FI

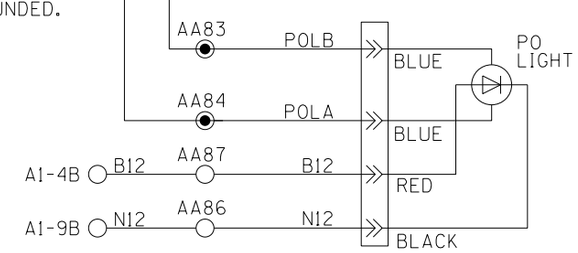

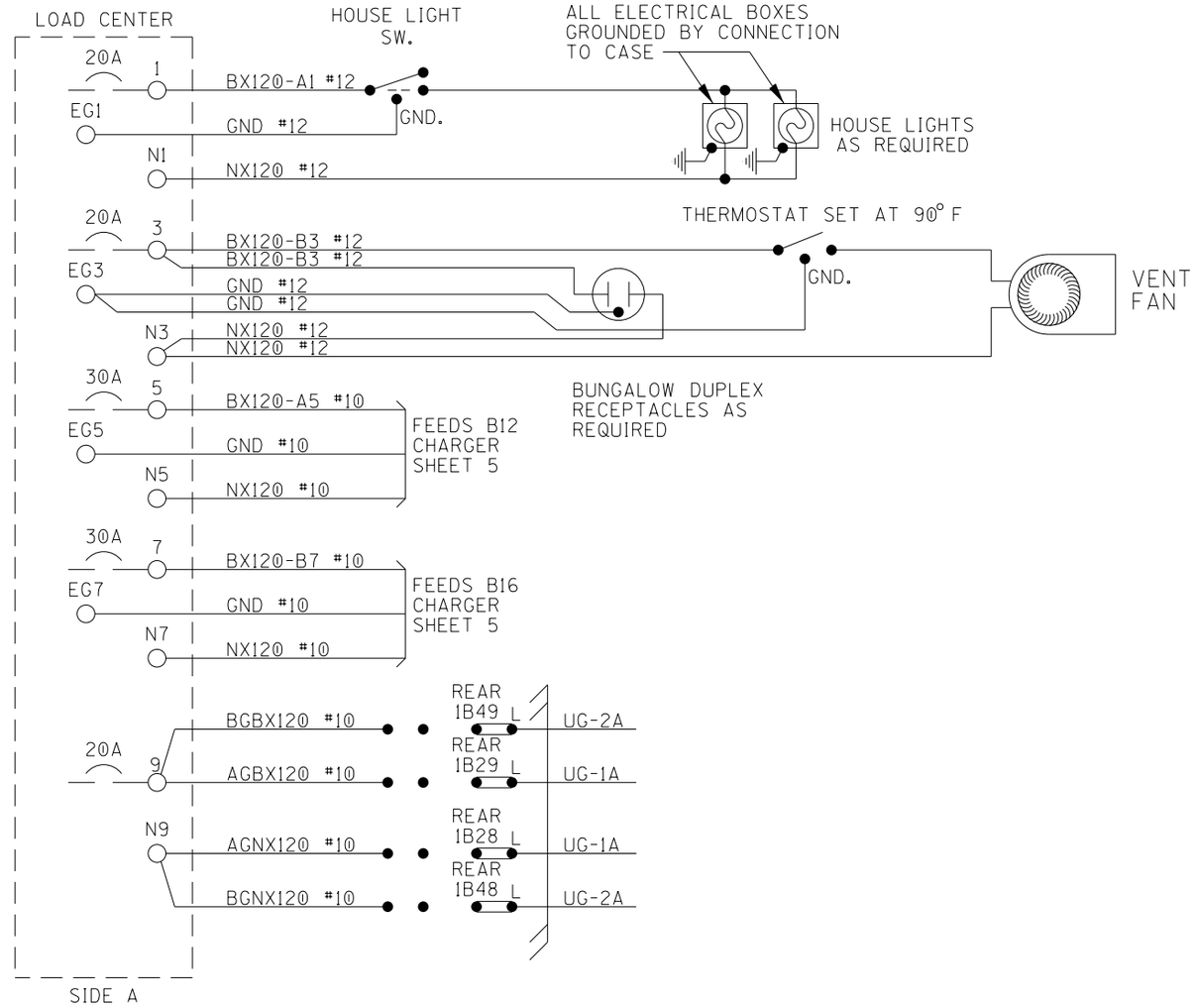

NOTE:
ALL WIRING TO BE #16AWG
UNLESS NOTED OTHERWISE.

GENERATOR RECEPTACLE:
MALE CONNECTOR - NEMA L1430-FI

LOAD CENTER

DESIGNED BY: TAH 06-15-18	NORFOLK SOUTHERN	
DRAWN BY: RSD 06-15-18	OFFICE OF ASS'T. VICE PRESIDENT COMM. & SIGNAL, ATLANTA, GA.	M.P.: RD-056.87
CHECKED BY: BES 06-15-18	HOMEWORTH, OH FLGS AT ESSICK RD. (TR 703)	
IN SERVICE: - -	CLEVELAND LINE	FILE No. R-
	CADD or DWG. No. 24260569.04	SHEET No. 4 of 22

REVISION INITIALS										

PROPERTY
PENNSYLVANIA R. R.

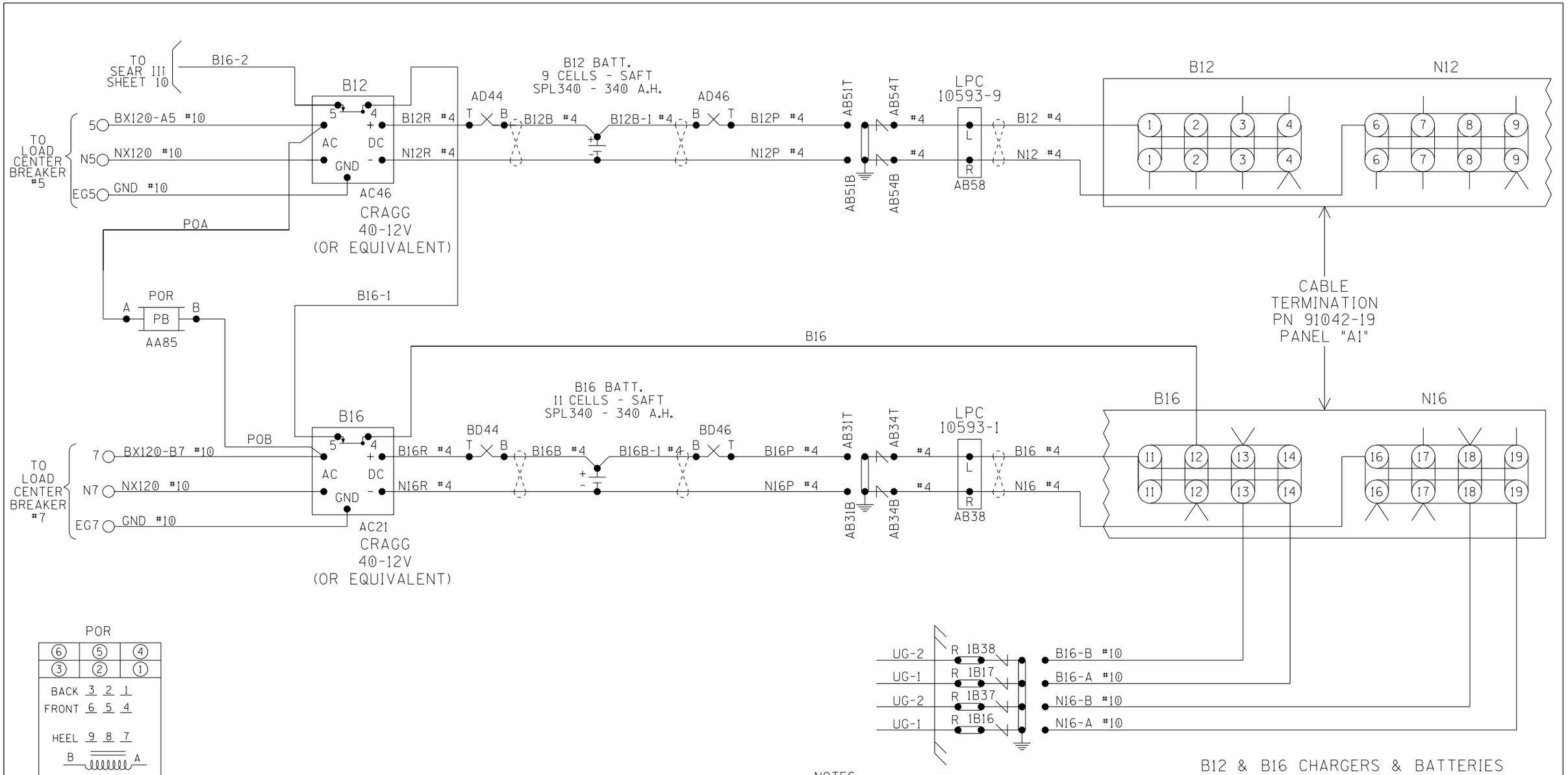

NOTES:
ALL WIRING TO BE #16AWG UNLESS NOTED OTHERWISE.

B12 & B16 CHARGERS & BATTERIES

DESIGNED BY: TAH 06-15-18	NORFOLK SOUTHERN	
DRAWN BY: RSD 06-15-18	OFFICE OF ASS'T. VICE PRESIDENT COMM. & SIGNAL, ATLANTA, GA.	M.P.: RD-056.87
CHECKED BY: BES 06-15-18	HOMEWORTH, OH FLGS AT ESSICK RD. (TR 703)	
IN SERVICE: - -	CLEVELAND LINE	FILE No. R-
	CADD or DWG. No. 24260569.05	SHEET No. 5 of 22

REVISION INITIALS

PROPERTY
PENNSYLVANIA R.R.

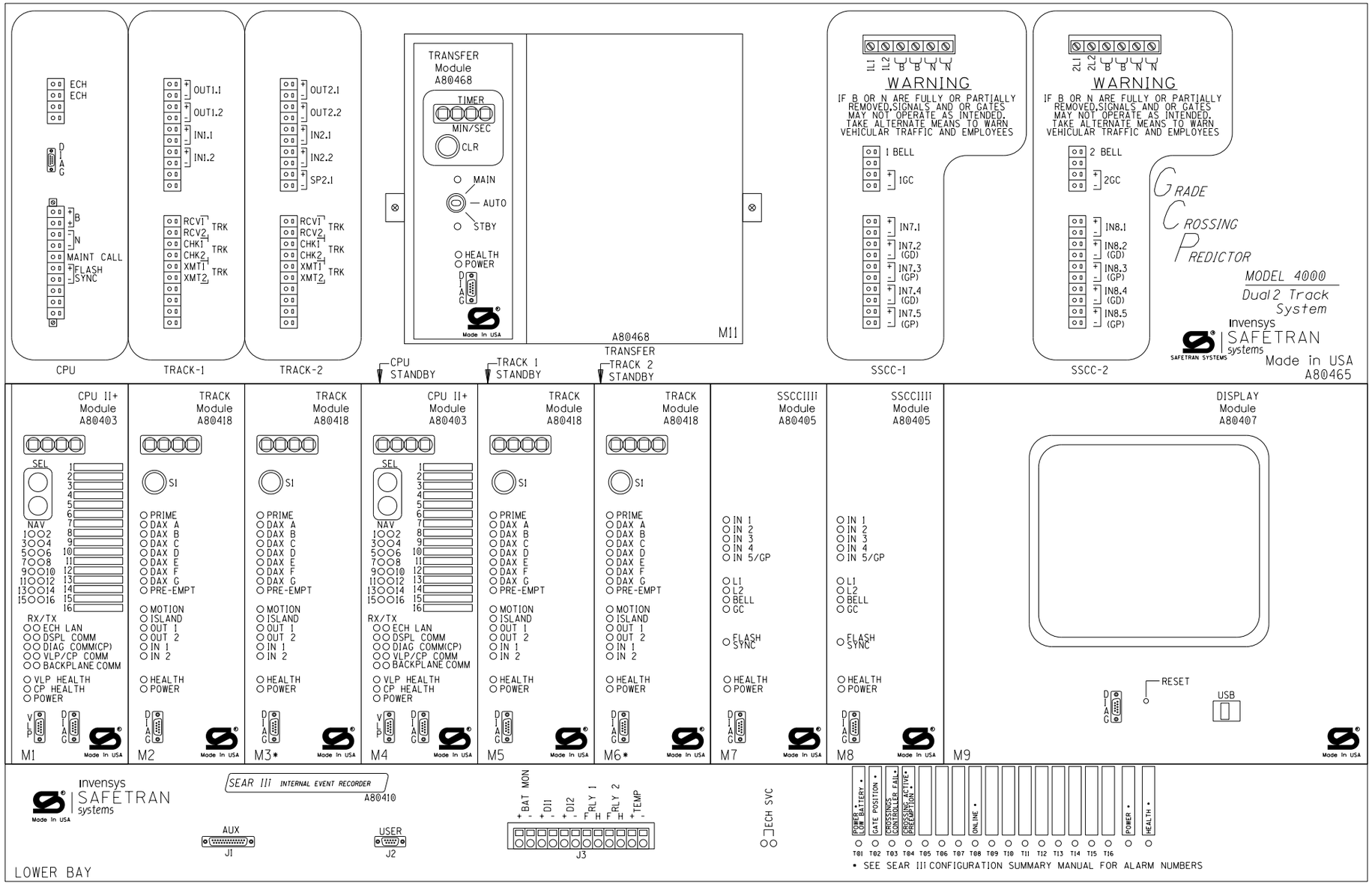

WARNING

REMOVAL OF THE SSCCIIIi MODULE WILL CAUSE THE GATE(S) TO DROP BUT THE LIGHTS WILL NOT ACTIVATE

CAUTION

ASSURE CORRECT POLARITY OF THE SSCCIIIi MODULE OR SEVERE DAMAGE WILL OCCUR.

ATTENTION!

ENSURE THE DISPLAY MODULE HEATER IS DISABLED. LEAVING THE DISPLAY HEATER ENABLED WILL REDUCE THE AMOUNT OF BATTERY STANDBY TIME IN THE EVENT OF AN AC POWER FAILURE.

HEATER FUNCTION IS JUMPER SELECTABLE ON THE DISPLAY MODULE BOARD.
THREE OPTIONS ARE AVAILABLE:
NORMAL LCD HTR (DEFAULT)
HI CURRENT
NO JUMPER (HEATER DISABLED)

*= MAIN AND STANDBY MAY USE RIO IN TRACK 2 SLOTS (M3 AND M6)

4000 GCP 2-TK CHASSIS & MODULE LAYOUT

DESIGNED BY: TAH 06-15-18	NORFOLK SOUTHERN	
DRAWN BY: RSD 06-15-18	OFFICE OF ASS'T. VICE PRESIDENT COMM. & SIGNAL, ATLANTA, GA.	M.P.: RD-056.87
CHECKED BY: BES 06-15-18	HOMEWORTH, OH FLGS AT ESSICK RD. (TR 703)	
IN SERVICE: - -	CLEVELAND LINE	FILE No. R-
	CADD or DWG. No. 24260569.06	SHEET No. 6 of 22

REVISION INITIALS										

PROPERTY
PENNSYLVANIA R. R.

Program Report

Location and SIN

DOT Number: 544878J
Milepost Number: RD-56.87
Site Name: ESSICK RD

SIN: 755003612516

MCF and Template Selection

MCF Name: GCP-T6X-02-1.mcf
MCF Revision: 021
MCFCRC: 6076E435

Template = 1D:3 Uni pairs

Check Numbers

Office Check No. (DT 4.6.0): 4227D7DF
Office Check Number: 4227D7DF
Config. Check Number: 58DA18B0
(Based on MCF Revision 021)

Program

BASIC: module configuration
Track 1 Slot = Track
Track 2/RIO 1 Slot = Track
Track 3 Slot = Not Used
Track 4 Slot = Not Used
Track 5/RIO 2 Slot = Not Used
Track 6/RIO 3 Slot = Not Used
SSCC-1 Slot = SSCC3i
SSCC-2 Slot = SSCC3i
SEAR Used = Yes

BASIC: MS/GCP operation
Track 1 : MS/GCP Operation = Yes
Track 2 : MS/GCP Operation = Yes

BASIC: island operation
Track 1 : Island Used = Internal
Track 2 : Island Used = No

BASIC: preemption
Preempt Logic = No

BASIC: radio Dax links
Radio DAX link A Used = No
Radio DAX link B Used = No

BASIC: Vital Comms links
Vital Comms link 1 Used = No
Vital Comms link 2 Used = No

PREDICTORS: track 1
Track 1 : Prime Used = Yes
Track 1 : Dax A Used = No
Track 1 : Dax B Used = No
Track 1 : Dax C Used = No
Track 1 : Dax D Used = No
Track 1 : Dax E Used = No
Track 1 : Dax F Used = No
Track 1 : Dax G Used = No

PREDICTORS: track 2
Track 2 : Prime Used = Yes
Track 2 : Dax A Used = No
Track 2 : Dax B Used = No
Track 2 : Dax C Used = No
Track 2 : Dax D Used = No
Track 2 : Dax E Used = No
Track 2 : Dax F Used = No
Track 2 : Dax G Used = No

GCP: track 1
Track 1 : GCP Freq Category = Other
Track 1 : GCP Frequency = 267 Hz
Track 1 : Approach Distance = 2058 ft
Track 1 : Uni/Bi/Sim-Bidirnl = Unidirnl
Track 1 : GCP Transmit Level = Medium
Track 1 : Island Connection = Isl1
Track 1 : Island Distance = 126 ft
Track 1 : Computed Distance = 9999 ft
Track 1 : Linearization Steps = 100

GCP: track 1 enhanced det
Track 1 : Inbound PS Sensitivity = Off
Track 1 : Speed Limiting Used = Yes
Track 1 : Outbound False Act Lvl = Normal
Track 1 : Outbound PS Timer = 20 sec
Track 1 : Trailing Switch Logic = On
Track 1 : Post Joint Detn Time = 15 sec
Track 1 : Adv Appr Predn = No
Track 1 : Cancel Pickup Delay = This Isl

GCP: track 1 prime
Track 1 : Prime Warning Time = 30 sec
Track 1 : Prime Offset Distance = 0 ft
Track 1 : Switch MS EZ Level = 10
Track 1 : Prime MS/GCP Mode = Pred
Track 1 : Prime Pickup Delay = 15 sec
Track 1 : Prime UAX = Not Used

GCP: track 1 pos start
Track 1 : Positive Start = Off
Track 1 : Sudden Shnt Det Used = No
Track 1 : Low EZ Detection Used = No

GCP: track 1 MS Control
Track 1 : MS/GCP Ctrl IP Used = No
Track 1 : MS Sensitivity Level = 0
Track 1 : Compensation Level = 1300
Track 1 : Warn Time-Ballast Comp = High
Track 1 : Low EX Adjustment = 39
Track 1 : Bidirn Dax Passthru = No
Track 1 : False Act on Train Stop = No
Track 1 : EX Limiting Used = Yes
Track 1 : EZ Correction Used = Yes

GCP: track 2
Track 2 : GCP Freq Category = Standard
Track 2 : GCP Frequency = 211 Hz
Track 2 : Approach Distance = 2058 ft
Track 2 : Uni/Bi/Sim-Bidirnl = Unidirnl
Track 2 : GCP Transmit Level = Medium
Track 2 : Island Connection = Isl1
Track 2 : Island Distance = 0 ft
Track 2 : Computed Distance = 9999 ft
Track 2 : Linearization Steps = 100

GCP: track 2 enhanced det
Track 2 : Inbound PS Sensitivity = Off
Track 2 : Speed Limiting Used = Yes
Track 2 : Outbound False Act Lvl = Normal
Track 2 : Outbound PS Timer = 20 sec
Track 2 : Trailing Switch Logic = On
Track 2 : Post Joint Detn Time = 15 sec
Track 2 : Adv Appr Predn = No
Track 2 : Cancel Pickup Delay = This Isl

GCP: track 2 prime
Track 2 : Prime Warning Time = 30 sec
Track 2 : Prime Offset Distance = 0 ft
Track 2 : Switch MS EZ Level = 10
Track 2 : Prime MS/GCP Mode = Pred
Track 2 : Prime Pickup Delay = 15 sec
Track 2 : Prime UAX = Not Used

GCP: track 2 pos start
Track 2 : Positive Start = Off
Track 2 : Sudden Shnt Det Used = No
Track 2 : Low EZ Detection Used = No

GCP: track 2 MS Control
Track 2 : MS/GCP Ctrl IP Used = No
Track 2 : MS Sensitivity Level = 0
Track 2 : Compensation Level = 1300
Track 2 : Warn Time-Ballast Comp = Low
Track 2 : Low EX Adjustment = 39
Track 2 : Bidirn Dax Passthru = No
Track 2 : False Act on Train Stop = No
Track 2 : EX Limiting Used = Yes
Track 2 : EZ Correction Used = Yes

ISLAND: track 1
Track 1 : Isl Frequency = 15.2 kHz
Track 1 : Pickup Delay (2s +) = 0 sec
Track 1 : Isl Enable IP Used = No

AND: track Anding
AND 1 XR Used = Yes
AND 2 Used = No
AND 3 Used = No
AND 4 Used = No
AND 5 Used = No
AND 6 Used = No
AND 7 Used = No
AND 8 Used = No

4000 GCP PROGRAMMING SETUP

DESIGNED BY: TAH 06-15-18	NORFOLK SOUTHERN		
DRAWN BY: RSD 06-15-18	OFFICE OF ASS'T. VICE PRESIDENT COMM. & SIGNAL, ATLANTA, GA.	M.P.: RD-056.87	
CHECKED BY: BES 06-15-18	HOMEWORTH, OH FLGS AT ESSICK RD. (TR 703)		
IN SERVICE: - -	CLEVELAND LINE	FILE No. R-	
	CADD or DWG. No. 24260569.07	SHEET No. 7 of 22	

REVISION INITIALS											

PROPERTY
PENNSYLVANIA R. R.

AND: AND 1 XR
AND 1 XR Track 1 = Prime
AND 1 XR Track 2 = Prime
AND 1 Enable Used = Yes
And 1 Enable Pickup = 5 sec
AND 1 Enable Drop = 0 sec
AND 1 Wrap Used = No

ADVANCED: MS restart
MS/GCP Restart Used = No

ADVANCED: out of service
OOS Control = Display+OOS IPs
OOS Timeout = Yes
OOS Timeout = 1 hrs

ADVANCED: out of service 2
T1 OOS Control = OOS Input 1
T2 OOS Control = OOS Input 1

ADVANCED: track wrap circuits
Wrap LOS Timer = 5 sec
Track 1 Wrap Used = No
Track 2 Wrap Used = No

ADVANCED: trk 1 overrides
Track 1 : All Predictors Override Used = No

ADVANCED: trk 2 overrides
Track 2 : All Predictors Override Used = No

ADVANCED: OR logic
OR 1 Used = No
OR 2 Used = No
OR 3 Used = No
OR 4 Used = No

ADVANCED: internal I/O 1
Pass Thrus = No
Int.1 Sets = Not Used
Int.1 Set by = Not Used
Int.2 Sets = Not Used
Int.2 Set by = Not Used
Int.3 Sets = Not Used
Int.3 Set by = Not Used
Int.4 Sets = Not Used
Int.4 Set by = Not Used

ADVANCED: internal I/O 2
Int.5 Sets = Not Used
Int.5 Set by = Not Used
Int.6 Sets = Not Used
Int.6 Set by = Not Used
Int.7 Sets = Not Used
Int.7 Set by = Not Used
Int.8 Sets = Not Used
Int.8 Set by = Not Used

ADVANCED: internal I/O 3
Int.9 Sets = Not Used
Int.9 Set by = Not Used
Int.10 Sets = Not Used
Int.10 Set by = Not Used
Int.11 Sets = Not Used
Int.11 Set by = Not Used
Int.12 Sets = Not Used
Int.12 Set by = Not Used

ADVANCED: internal I/O 4
Int.13 Sets = Not Used
Int.13 Set by = Not Used
Int.14 Sets = Not Used
Int.14 Set by = Not Used
Int.15 Sets = Not Used
Int.15 Set by = Not Used
Int.16 Sets = Not Used
Int.16 Set by = Not Used

ADVANCED: site options
Daylight Savings = On
Units = Standard
Maint Call Rpt IP Used = No
Emergency Activate IP = No
EZ/EX Logging = Change
EZ/EX Point Change = 3

SSCC
Gates Used = Yes
SSCC1+2 GPs Coupled = Yes
Min Activation = 0 sec
Rmt Activation Cancel = 2 min
Bell On Gate Rising = No
Mute Bell On Gate Down = No
SSCCIV Controller Used = No

SSCC: 1
SSCC-1 Activation = AND 1 XR
SSCC-1 Gate Delay = 6 sec
SSCC-1 Number of GPs = 1
SSCC-1 Number of GDs = 2
SSCC 1 : Flash Rate = 40
SSCC 1 : Low Battery Detection = No
SSCC 1 : Flash Sync = master
SSCC 1 : Invert Gate Output = No
SSCC 1 : Lamp Neutral Test = Off
Aux-1 Xng Ctrl Used = No

SSCC: 2
SSCC-2 Activation = AND 1 XR
SSCC-2 Gate Delay = 6 sec
SSCC-2 Number of GPs = 0
SSCC-2 Number of GDs = 0
SSCC 2 : Flash Rate = 40
SSCC 2 : Low Battery Detection = No
SSCC 2 : Flash Sync = slave
SSCC 2 : Invert Gate Output = No
SSCC 2 : Lamp Neutral Test = Off
Aux-2 Xng Ctrl Used = No

OUTPUT: assignment page 1
OUT 1.1 = Not Used
OUT 1.2 = Not Used
OUT 2.1 = Not Used
OUT 2.2 = Not Used

INPUT: assignment page 1
IN 1.1 = Not Used
IN 1.2 = Not Used
IN 2.1 = Not Used
IN 2.2 = Not Used

IO: assignment SSCC
OUT GC 1 = Gate Output 1
OUT GC 2 = Gate Output 2
IN 7.1 = Not Used
IN 7.2 = GD 1.2
IN 7.3 = AND 1 XR Enable
IN 7.4 = GD 1.1
IN 7.5 = GP 1.1
IN 8.1 = Out Of Service IP 1
IN 8.2 = Not Used
IN 8.3 = Not Used
IN 8.4 = Not Used
IN 8.5 = Not Used

SEAR
SEAR Subnode = 3
DI 1 = Not Used
DI 2 = Not Used
Rly 1 = General1
Rly 2 = Not Used

SEAR: inputs
SP 2.1 = POK 1
SP 3.1 = Not Used
SP 4.1 = Not Used
SP 5.1 = Not Used
SP 6.1 = Not Used

SEAR: slot 1-4 inputs
IN 1.1 = Not Used
IN 1.2 = Not Used
IN 2.1 = Not Used
IN 2.2 = Not Used
IN 3.1 = Not Used
IN 3.2 = Not Used
IN 4.1 = Not Used
IN 4.2 = Not Used

SEAR: inputs slot 5
IN 5.1 = Not Used
IN 5.2 = Not Used

SEAR: inputs slot 6
IN 6.1 = Not Used
IN 6.2 = Not Used

SEAR: slot 7-8 inputs
IN 7.1 = Not Used
IN 8.2 = Not Used
IN 8.3 = Not Used
IN 8.4 = Not Used
IN 8.5 = Not Used

SITE: programming
Radio Subnode = 1
Field Password = Off
Low Battery Enabled = Off

Configuration Package File

Filename: 24260569.pac

4000 GCP PROGRAMMING SETUP

DESIGNED BY: TAH 06-15-18	NORFOLK SOUTHERN		
DRAWN BY: RSD 06-15-18	OFFICE OF ASS'T. VICE PRESIDENT COMM. & SIGNAL, ATLANTA, GA.	M.P.: RD-056.87	
CHECKED BY: BES 06-15-18	HOMEWORTH, OH FLGS AT ESSICK RD. (TR 703)		
IN SERVICE: - -	CLEVELAND LINE	FILE No. R-	
	CADD or DWG. No. 24260569.08	SHEET No. 8 of 22	

REVISION INITIALS											

PROPERTY
PENNSYLVANIA R. R.

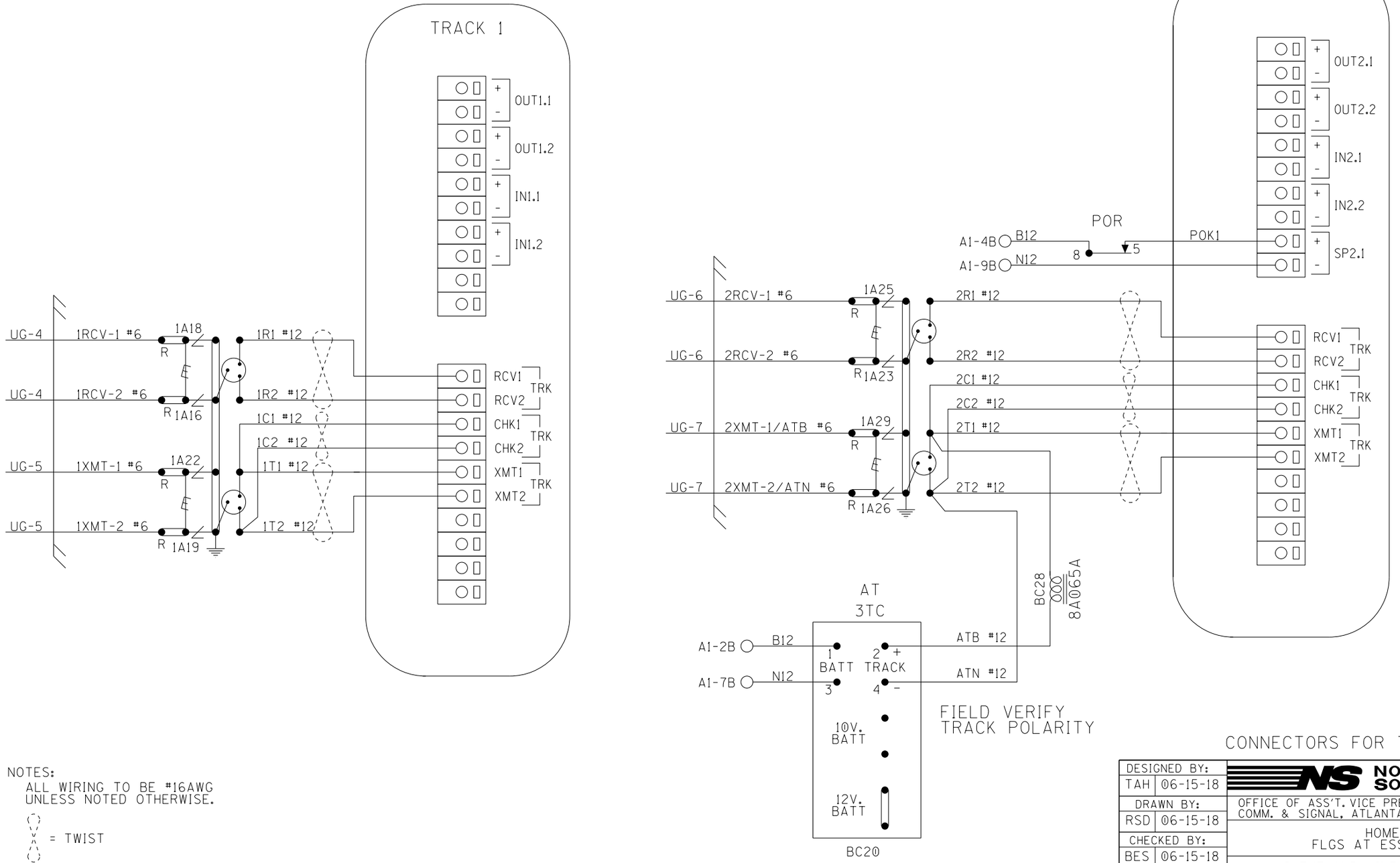

CONNECTORS FOR TRACK MODULES

NOTES:
ALL WIRING TO BE #16AWG
UNLESS NOTED OTHERWISE.

= TWIST

DESIGNED BY: TAH 06-15-18	NORFOLK SOUTHERN		
DRAWN BY: RSD 06-15-18	OFFICE OF ASS'T. VICE PRESIDENT COMM. & SIGNAL, ATLANTA, GA.	M.P.: RD-056.87	
CHECKED BY: BES 06-15-18	HOMEWORTH, OH FLGS AT ESSICK RD. (TR 703)		
IN SERVICE: - -	CLEVELAND LINE	FILE No. R-	
	CADD or DWG. No. 24260569.09	SHEET No. 9 of 22	

REVISION INITIALS

PROPERTY
PENNSYLVANIA R.R.

* SEE SEAR III CONFIGURATION SUMMARY MANUAL FOR ALARM NUMBERS

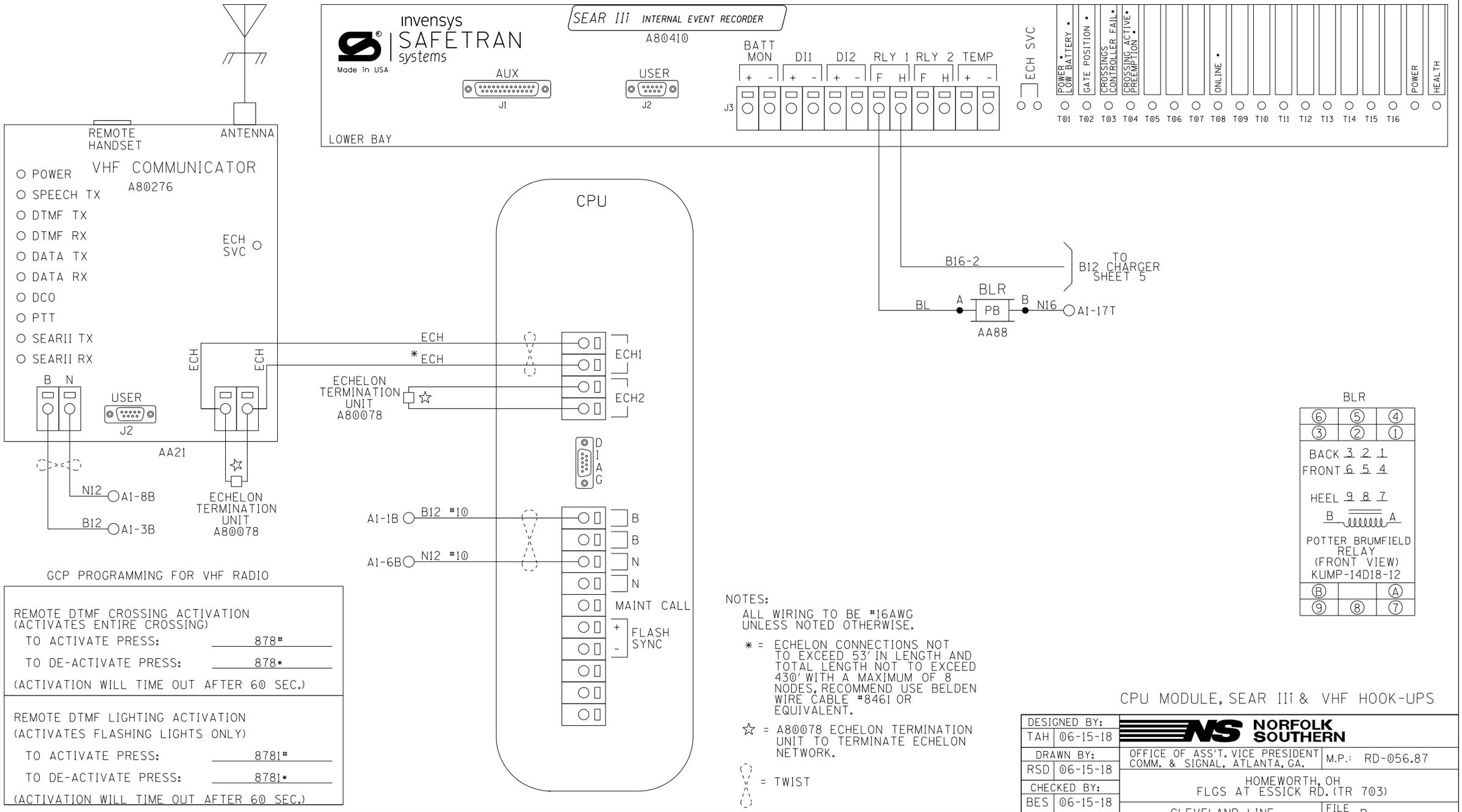

GCP PROGRAMMING FOR VHF RADIO

REMOTE DTMF CROSSING ACTIVATION (ACTIVATES ENTIRE CROSSING)	
TO ACTIVATE PRESS:	878#
TO DE-ACTIVATE PRESS:	878*
(ACTIVATION WILL TIME OUT AFTER 60 SEC.)	
REMOTE DTMF LIGHTING ACTIVATION (ACTIVATES FLASHING LIGHTS ONLY)	
TO ACTIVATE PRESS:	8781#
TO DE-ACTIVATE PRESS:	8781*
(ACTIVATION WILL TIME OUT AFTER 60 SEC.)	

NOTES:

ALL WIRING TO BE #16AWG UNLESS NOTED OTHERWISE.

* = ECHELON CONNECTIONS NOT TO EXCEED 53' IN LENGTH AND TOTAL LENGTH NOT TO EXCEED 430' WITH A MAXIMUM OF 8 NODES, RECOMMEND USE BELDEN WIRE CABLE #8461 OR EQUIVALENT.

☆ = A80078 ECHELON TERMINATION UNIT TO TERMINATE ECHELON NETWORK.

= TWISTED

CPU MODULE, SEAR III & VHF HOOK-UPS

DESIGNED BY: TAH 06-15-18	NORFOLK SOUTHERN		
DRAWN BY: RSD 06-15-18	OFFICE OF ASS'T. VICE PRESIDENT COMM. & SIGNAL, ATLANTA, GA.	M.P.: RD-056.87	
CHECKED BY: BES 06-15-18	HOMEWORTH, OH FLGS AT ESSICK RD. (TR 703)		
IN SERVICE: - -	CLEVELAND LINE	FILE No. R-	
	CADD or DWG. No. 24260569.10	SHEET No. 10 of 22	

REVISION INITIALS										

PROPERTY
PENNSYLVANIA R.R.

	SITE SET UP PROCEDURE	
	FUNCTION	LED DISPLAY
	DATE/TIME	
	AUTOMATIC DST ADJUSTMENT	YES
	TIME ZONE	EST
	SITE NAME	ESSICK RD.
	MILEPOST	RD-56.87
	DOT #	544878J
	TESTER TYPE	CROSSING
	DATE FORMAT	MM-DD-YYYY
	TEMP FORMAT	FAHRENHEIT
	INDICATE HOLD (SEC)	0
	INDICATE REFRESH (SEC)	60
	SITE ATCS	7.550.036.125.03.01
	SITE TYPE	NO COMMUNICATION
**	OFFICE ATCS ADDRESS	2.550.01.9100
**	PRIMARY HOP ADDR	7.RRR.LLL.GGG.XX.XX
**	BACKUP HOP ADDR 1	7.RRR.LLL.GGG.XX.XX
**	BACKUP HOP ADDR 2	7.RRR.LLL.GGG.XX.XX
**	POLL ID	1
**	MODE	GEN/ATCS
**	WAMS XID	DISABLED
**	OFFICE COMM DEVICE	MCM (ECHELON)
**	RADIO ATCS ADDR	7.RRR.LLL.GGG.01.01
**	PHONE #	(OFFICE NUMBER)
**	INIT STRING	
**	FIELD COMM DEVICE	NONE
***	USER PORT BAUD	57600
***	USER PORT DATA BITS	8
***	USER PORT PARITY	NONE
***	USER PORT STOP BITS	1
***	USER PORT FLOW CONTROL	NONE
***	AUX PORT BAUD	9600
***	AUX PORT DATA BITS	8
***	AUX PORT PARITY	NONE
***	AUX PORT STOP BITS	1
***	AUX PORT FLOW CONTROL	NONE

	CONTROL SYSTEM CONFIGURATION MENU QUESTIONS	
	THE QUESTION	SELECT FROM MENU OPTION
	RESET NAMES AND MODULES?	YES
	RAILROAD NUMBER	550
	CROSSING CONFIGURATION	NORMAL
	AND 1 USED AS XR?	YES
	AND 2 USED AS XR?	NO
	AND 3 USED AS XR?	NO
	AND 4 USED AS XR?	NO
	AND 5 USED AS XR?	NO
	AND 6 USED AS XR?	NO
	AND 7 USED AS XR?	NO
	AND 8 USED AS XR?	NO
*	XR CONTROLLED BY FOREIGN RR	
	ENTRANCE GATES	2
	85% VOLTAGE RELAY OUT	YES
*	GATES CONTROLLED BY FOREIGN RR	
	BATTERY BANKS	2
	BATTERY MON USED	NO
	PREEMPTION	NO
	INTERNAL CROSSING CONTROLLERS	2
	EXTERNAL CROSSING CONTROLLERS	0
	VHF COMMUNICATOR	YES
	DTMF ACTIVATION	YES
****	ACTIVATION CODE	878
	ACTIVATION TIMEOUT (SECONDS)	60
	ILOD MODULES	0
*****	ANY LED BULBS USED	
	VHF VOICE CHANNEL	2
	VHF DATA CHANNEL	2
	USE CELL MODEM NON-CRITICAL FEATURE	NO

PROGRAM MENU QUESTIONS	PROGRAM
EDIT DIGITAL INPUTS	NO
EDIT BATTERIES	NO
EDIT RELAYS	NO
EDIT INDICATOR LEDS	NO
EDIT TEST LEDS	NO
EDIT ILOD SENSORS	NO
EDIT VHF SETTINGS	NO
GCP4K ATCS SUBNODE	16

NOTES:

* = DISPLAYED IF CROSSING CONFIGURATION IS SPLIT GATE.

** = IF SITE TYPE = NO COMMUNICATION, THEN THESE OPTIONS ARE NOT DISPLAYED.

*** = THESE SETTINGS SHOULD BE LEFT AT THE DEFAULT SETTING.

**** = USE LAST 3 NUMBERS FROM DOT NUMBER.

***** = IF ILOD MODULE >0.

TO CONFIGURE SEARIIi PRESS SITE SETUP KEY.
USE ARROW KEYS TO MAKE SELECTION,
PRESS ENTER AFTER SELECTION HAS BEEN MADE.

SEAR IIi PROGRAMMING SETUP

DESIGNED BY: TAH 06-15-18	NORFOLK SOUTHERN		
DRAWN BY: RSD 06-15-18	OFFICE OF ASS'T. VICE PRESIDENT COMM. & SIGNAL, ATLANTA, GA.	M.P.: RD-056.87	
CHECKED BY: BES 06-15-18	HOMEWORTH, OH FLGS AT ESSICK RD. (TR 703)		
IN SERVICE: - -	CLEVELAND LINE	FILE No. R-	
	CADD or DWG. No. 24260569.11	SHEET No. 11 of 22	

REVISION INITIALS											

PROPERTY
PENNSYLVANIA R. R.

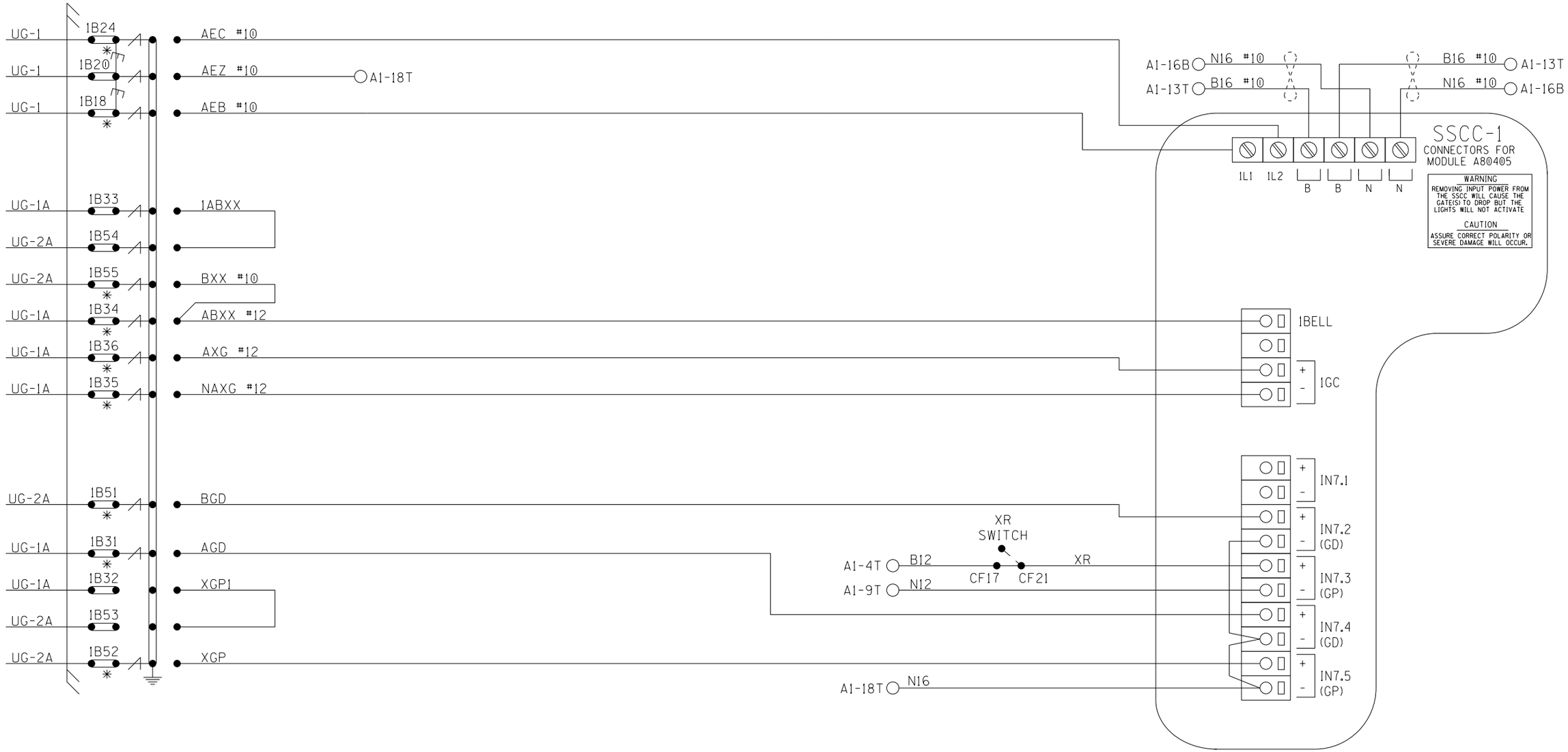

NOTES: ALL WIRING TO BE #16AWG UNLESS NOTED OTHERWISE.

* = TEST LINKS MUST BE OPENED TEMPORARILY FOR NEW COLD START OF NEW OR REPLACEMENT SSCC MODULE AND CAN ONLY BE CLOSED IN SEQUENCE WITH MFR. INSTRUCTIONS: SECTION 8 OF THE GCP 4000 REFERENCE MANUAL.

= TWIST

SSCC#1 MODULE HOOK-UP

DESIGNED BY: TAH 06-15-18	NORFOLK SOUTHERN		
DRAWN BY: RSD 06-15-18	OFFICE OF ASS'T. VICE PRESIDENT COMM. & SIGNAL, ATLANTA, GA.	M.P.: RD-056.87	
CHECKED BY: BES 06-15-18	HOMEWORTH, OH FLGS AT ESSICK RD. (TR 703)		
IN SERVICE: - -	CLEVELAND LINE	FILE No. R-	
	CADD or DWG. No. 24260569.12	SHEET No. 12 of 22	

REVISION INITIALS											

PROPERTY
PENNSYLVANIA R. R.

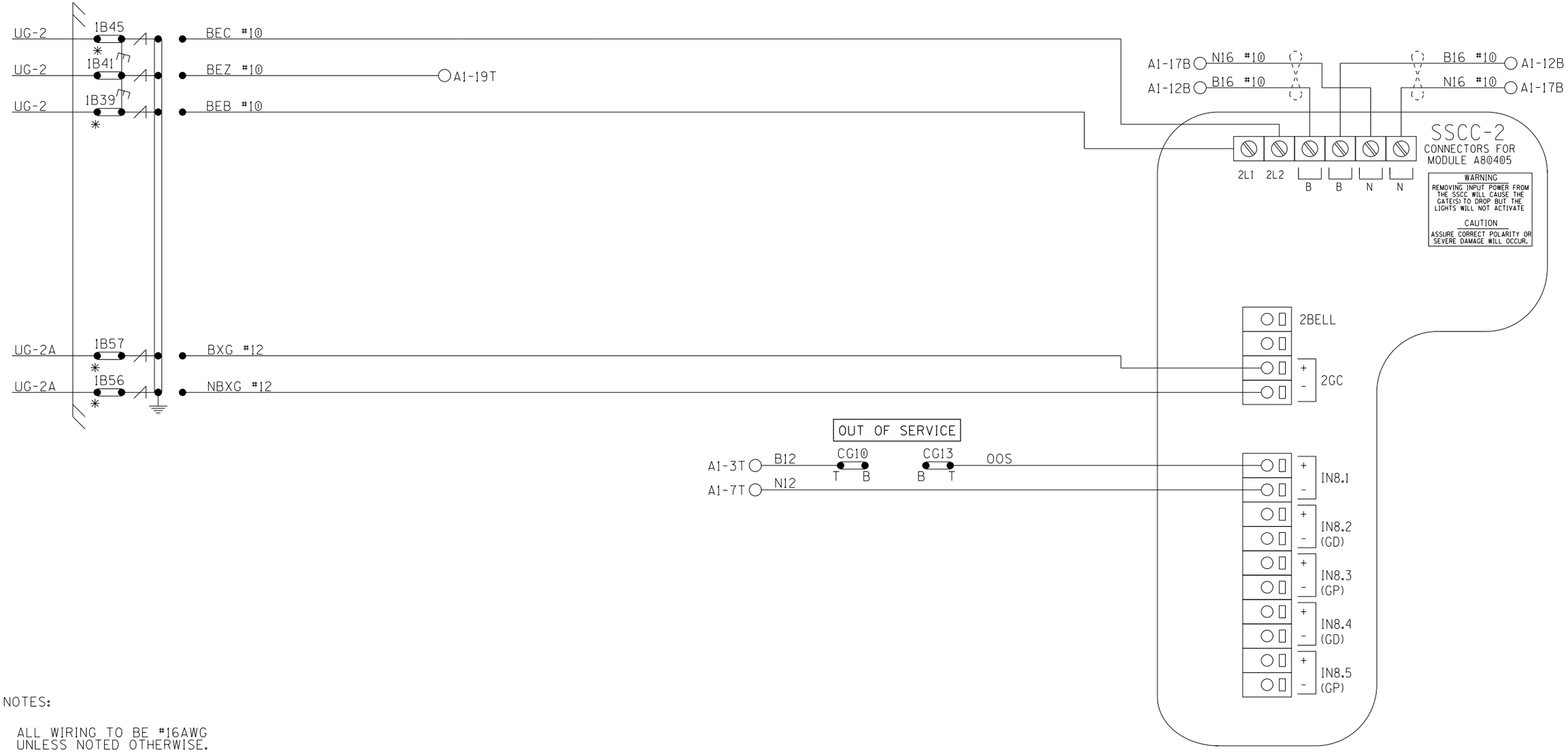

NOTES:

ALL WIRING TO BE #16AWG
UNLESS NOTED OTHERWISE.

* = TEST LINKS MUST BE OPENED TEMPORARILY FOR NEW COLD START OF NEW OR REPLACEMENT SSCC MODULE AND CAN ONLY BE CLOSED IN SEQUENCE WITH MFR. INSTRUCTIONS: SECTION 8 OF THE GCP 4000 REFERENCE MANUAL.

= TWIST

SSCC#2 MODULE HOOK-UP

DESIGNED BY: TAH 06-15-18	NORFOLK SOUTHERN		
DRAWN BY: RSD 06-15-18	OFFICE OF ASS'T. VICE PRESIDENT COMM. & SIGNAL, ATLANTA, GA.	M.P.: RD-056.87	
CHECKED BY: BES 06-15-18	HOMEWORTH, OH FLGS AT ESSICK RD. (TR 703)		
IN SERVICE: - -	CLEVELAND LINE	FILE No. R-	
	CADD or DWG. No. 24260569.13	SHEET No. 13 of 22	

REVISION INITIALS											

PROPERTY
PENNSYLVANIA R. R.

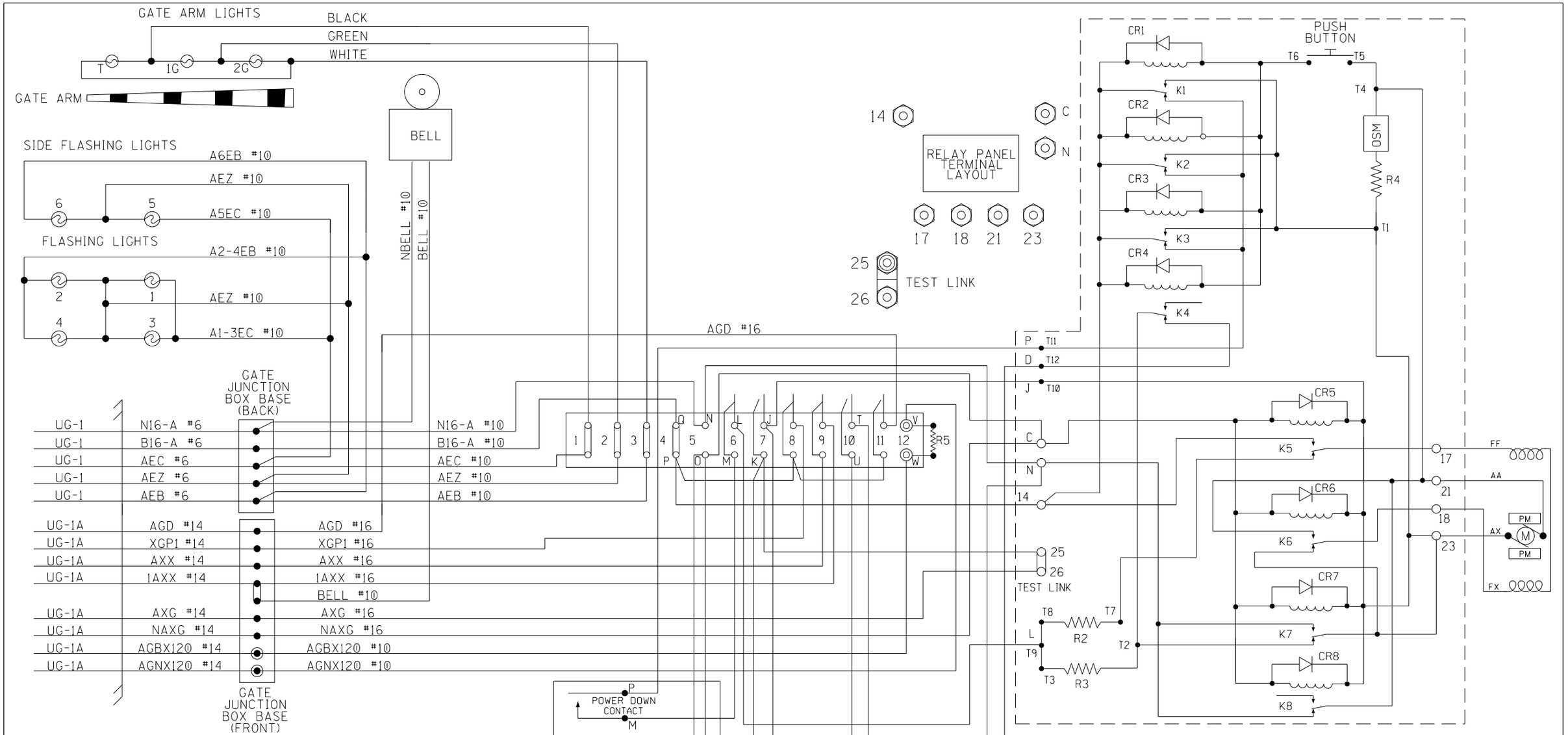

CONTACT SPACE	CONTACT CLOSED AT	FUNCTION OF CONTACT
(6) L-M	45°-90°	POWER DOWN CONTROL
(7) J-K	0°-89°	POWER UP CONTROL
(8)	83°-90°	FLASHING LGT. CONTROL
(9)	5°-90°	BELL CONTROL
(10) T-U	0°-5°	HORIZONTAL SNUB
(11)	0°-5°	GATE DOWN INDICATION

R1 - DOWN SNUB RESISTOR, ADJ.
R2 - POWER DOWN RATE RESISTOR
R3 - POWER DOWN LIMIT RESISTOR

R4 - OSM SNUB RESISTOR
R5 - DEFROSTER
K1-8 - GATE & MAINT. RELAYS
OSM - OVERSPEED MODULE

SIGNAL "A" S40 GATE & FLASHER CIRCUITS

DESIGNED BY: TAH 06-15-18	NORFOLK SOUTHERN	
DRAWN BY: RSD 06-15-18	OFFICE OF ASS'T. VICE PRESIDENT COMM. & SIGNAL, ATLANTA, GA.	M.P.: RD-056.87
CHECKED BY: BES 06-15-18	HOMEWORTH, OH FLGS AT ESSICK RD. (TR 703)	
IN SERVICE: - -	CLEVELAND LINE	FILE No. R-
	CADD or DWG. No. 24260569.14	SHEET No. 14 of 22

REVISION INITIALS

PROPERTY
PENNSYLVANIA R. R.

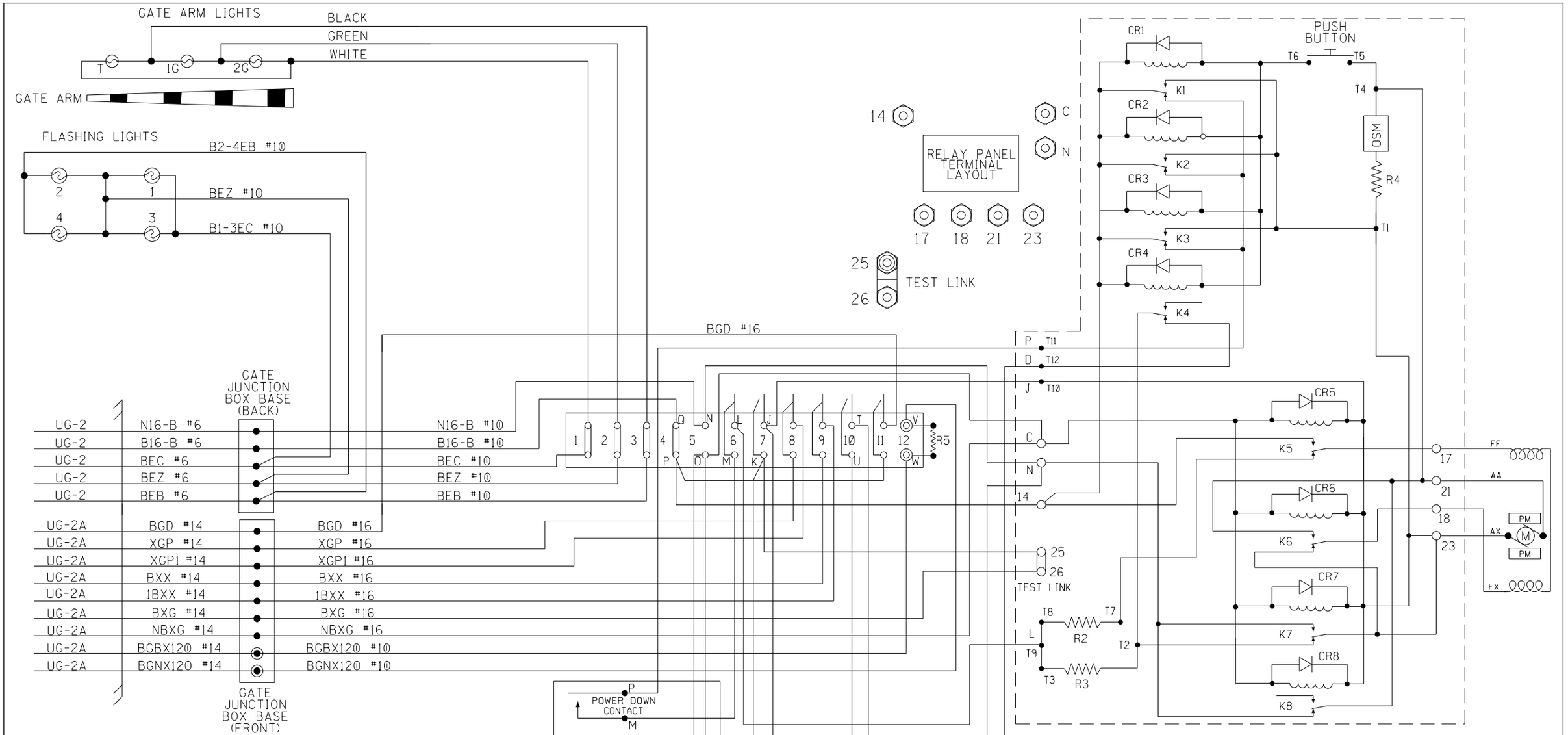

CONTACT SPACE	CONTACT CLOSED AT	FUNCTION OF CONTACT
(6) L-M	45° -90°	POWER DOWN CONTROL
(7) J-K	0° -89°	POWER UP CONTROL
(8)	83° -90°	FLASHING LGT. CONTROL
(9)	5° -90°	BELL CONTROL
(10) T-U	0° -5°	HORIZONTAL SNUB
(11)	0° -5°	GATE DOWN INDICATION

R1 - DOWN SNUB RESISTOR, ADJ.
R2 - POWER DOWN RATE RESISTOR
R3 - POWER DOWN LIMIT RESISTOR

R4 - OSM SNUB RESISTOR
R5 - DEFROSTER
K1-8 - GATE & MAINT. RELAYS
OSM - OVERSPEED MODULE

SIGNAL "B" S40 GATE & FLASHER CIRCUITS

DESIGNED BY: TAH 06-15-18	NORFOLK SOUTHERN	
DRAWN BY: RSD 06-15-18	OFFICE OF ASS'T. VICE PRESIDENT COMM. & SIGNAL, ATLANTA, GA.	M.P.: RD-056.87
CHECKED BY: BES 06-15-18	HOMEWORTH, OH FLGS AT ESSICK RD. (TR 703)	
IN SERVICE: - -	CLEVELAND LINE	FILE No. R-
	CADD or DWG. No. 24260569.15	SHEET No. 15 of 22

REVISION INITIALS										

PROPERTY
PENNSYLVANIA R. R.

LEFT TWO ROWS TERMINAL BOARD 1

"1A" "1B"

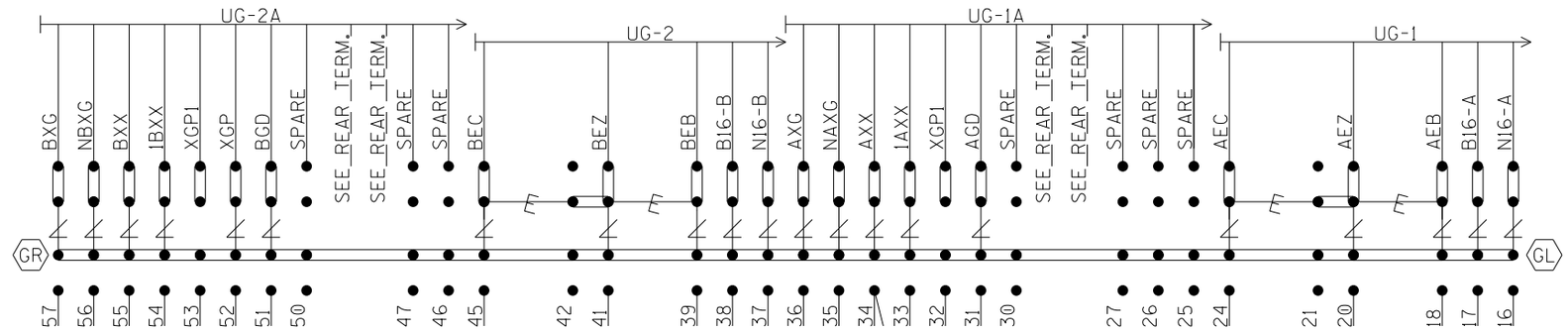

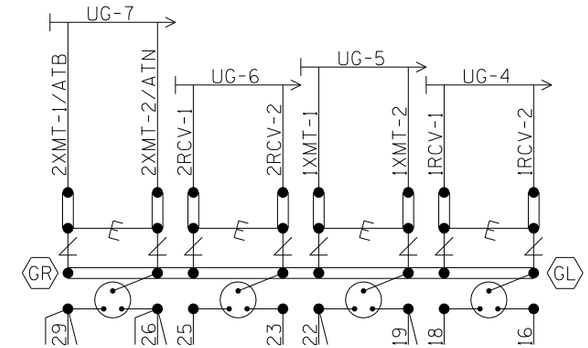

NOTE: INSTALL TEST LINKS ON ALL TRACK WIRES AND ON ALL LOW VOLTAGE UNDERGROUND CABLE TERMINATIONS.

SEE FARADAY SHIELD DETAILS - 1A & 1B FOR HOW THIS PORTION OF THE FARADAY SHIELD IS PREDRILLED. ONLY INSTALL AND USE THE TERMINALS NEEDED.

= Heavy Duty Equalizer (022700-1X)

= Clearview Lightning Arrester (022585-1X)

= LPC-10560-51

GR / GL = TERMINALS GROUNDED TO SHIELD. 4 POST BLOCKS USE EITHER - GR - SERMMI PART NO. 61278 GL - SERMMI PART NO. 61278-1.

BACKBOARD 1A & 1B

DESIGNED BY: TAH 06-15-18	NORFOLK SOUTHERN	
DRAWN BY: RSD 06-15-18	OFFICE OF ASS'T. VICE PRESIDENT COMM. & SIGNAL, ATLANTA, GA.	M.P.: RD-056.87
CHECKED BY: BES 06-15-18	HOMEWORTH, OH FLGS AT ESSICK RD. (TR 703)	
IN SERVICE: - -	CLEVELAND LINE	FILE No. R-
	CADD or DWG. No. 24260569.16	SHEET No. 16 of 22

REVISION INITIALS										

PROPERTY
PENNSYLVANIA R. R.

REAR VIEW OF LEFT TWO ROWS TERMINAL BOARD 1

"1A" "1B"

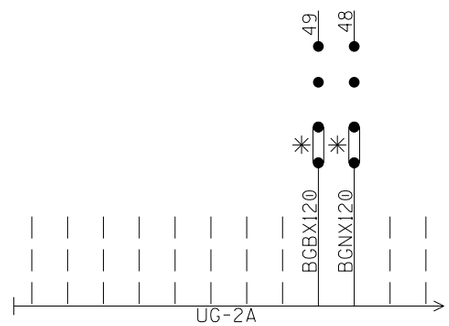

(SEE PREVIOUS SHEET FOR OTHER WIRES IN CABLE)

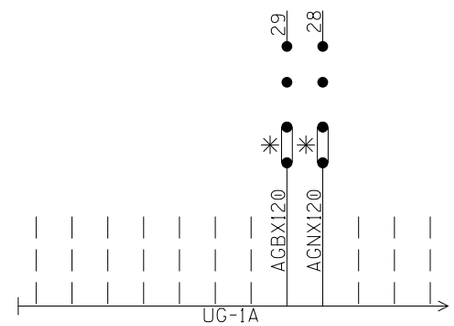

(SEE PREVIOUS SHEET FOR OTHER WIRES IN CABLE)

NOTE: ALL 120VAC AND ABOVE WILL BE WIRED TO THE REAR OF FARADAY BACKBOARD. INSULATED NUTS MUST BE USED ON ALL TERMINALS.

✳ = CLOSED DURING WINTER MONTHS

REAR BACKBOARD 1A & 1B

DESIGNED BY: TAH 06-15-18	NORFOLK SOUTHERN		
DRAWN BY: RSD 06-15-18	OFFICE OF ASS'T. VICE PRESIDENT COMM. & SIGNAL, ATLANTA, GA.	M.P.: RD-056.87	
CHECKED BY: BES 06-15-18	HOMEWORTH, OH FLGS AT ESSICK RD. (TR 703)		
IN SERVICE: - -	CLEVELAND LINE	FILE No. R-	
	CADD or DWG. No. 24260569.17	SHEET No. 17 of 22	

REVISION INITIALS											

PROPERTY
PENNSYLVANIA R. R.

NOTE: IF THE FARADAY SHIELD WOULD EVER NEED TO BE DRILLED IN THE FIELD, PROPER PRECAUTIONS MUST BE TAKEN TO INSURE METAL SHAVINGS DO NOT GET INTO EXISTING TERMINALS/WIRES.

AREA BELOW IS SCALED WITH AS=.75

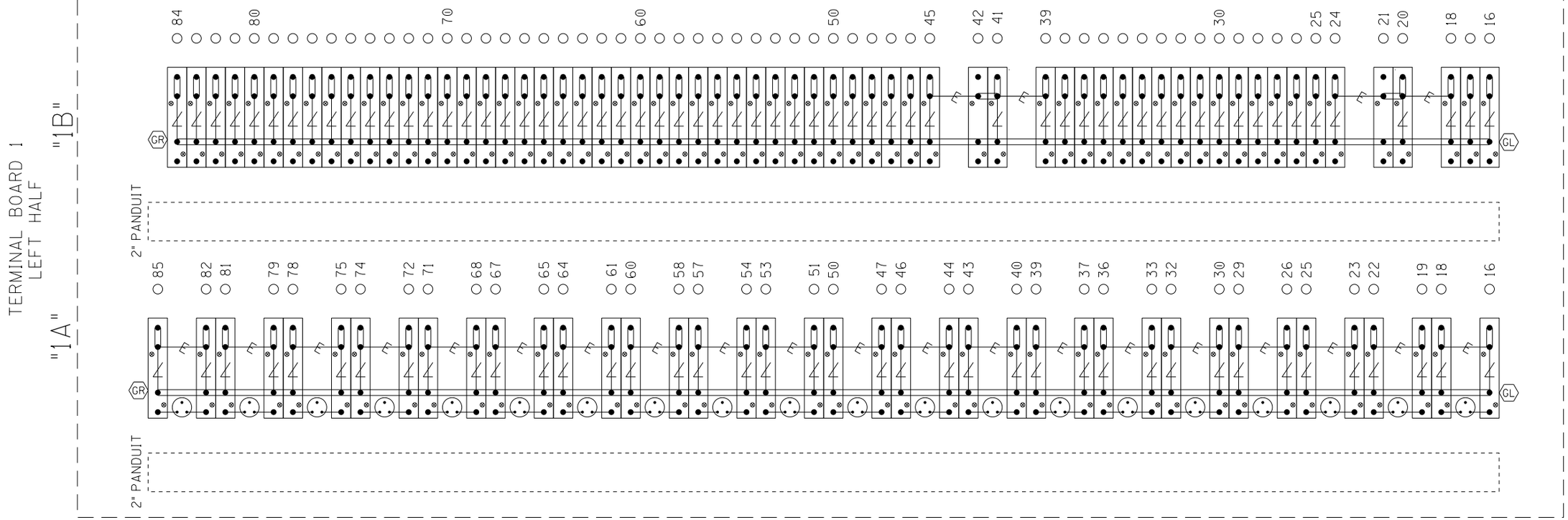

= Heavy Duty Equalizer (022700-1X)

Clearview = Lightning Arrester (022585-1X)

= LPC-10560-51

FARADAY SHIELD 1A & 1B

= INDICATES PLACEMENT OF PANDUIT

THIS SHEET IS FOR REFERENCE ONLY, TO REFLECT HOW THE FARADAY SHIELD IS PREDRILLED. ONLY INSTALL AND USE THE TERMINALS NEEDED.

GR / GL = TERMINALS GROUNDED TO SHIELD.
4 POST BLOCKS USE EITHER -
GR - SERMMI PART NO. 61278
GL - SERMMI PART NO. 61278-1.

DESIGNED BY: TAH 06-15-18	NORFOLK SOUTHERN	
DRAWN BY: RSD 06-15-18	OFFICE OF ASS'T. VICE PRESIDENT COMM. & SIGNAL, ATLANTA, GA.	M.P.: RD-056.87
CHECKED BY: BES 06-15-18	HOMEWORTH, OH FLGS AT ESSICK RD. (TR 703)	
IN SERVICE: - -	CLEVELAND LINE	FILE No. R-
	CADD or DWG. No. 24260569.18	SHEET No. 18 of 22

REVISION INITIALS										

PROPERTY
PENNSYLVANIA R.R.

NOTE: IF THE FARADAY SHIELD WOULD EVER NEED TO BE DRILLED IN THE FIELD, PROPER PRECAUTIONS MUST BE TAKEN TO INSURE METAL SHAVINGS DO NOT GET INTO EXISTING TERMINALS/WIRES.

AREA BELOW IS SCALED WITH AS=.75

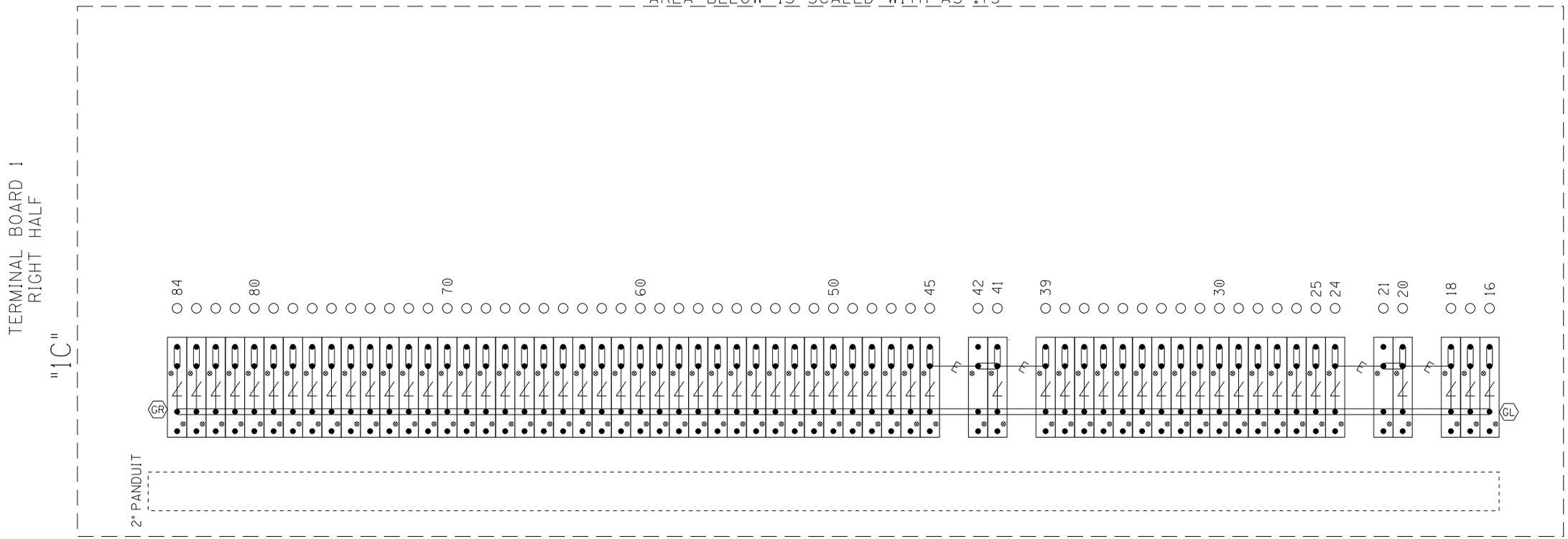

= Heavy Duty Equalizer (022700-1X)

Clearview = Lightning Arrester (022585-1X)

= LPC-10560-51

GR / GL = TERMINALS GROUNDED TO SHIELD. 4 POST BLOCKS USE EITHER - GR - SERMMI PART NO. 61278 GL - SERMMI PART NO. 61278-1.

= INDICATES PLACEMENT OF PANDUIT

THIS SHEET IS FOR REFERENCE ONLY, TO REFLECT HOW THE FARADAY SHIELD IS PREDRILLED. ONLY INSTALL AND USE THE TERMINALS NEEDED.

FARADAY SHIELD 1C

DESIGNED BY: TAH 06-15-18	NORFOLK SOUTHERN	
DRAWN BY: RSD 06-15-18	OFFICE OF ASS'T. VICE PRESIDENT COMM. & SIGNAL, ATLANTA, GA.	M.P.: RD-056.87
CHECKED BY: BES 06-15-18	HOMEWORTH, OH FLGS AT ESSICK RD. (TR 703)	
IN SERVICE: - -	CLEVELAND LINE	FILE No. R-
	CADD or DWG. No. 24260569.19	SHEET No. 19 of 22

REVISION INITIALS										

PROPERTY
PENNSYLVANIA R.R.

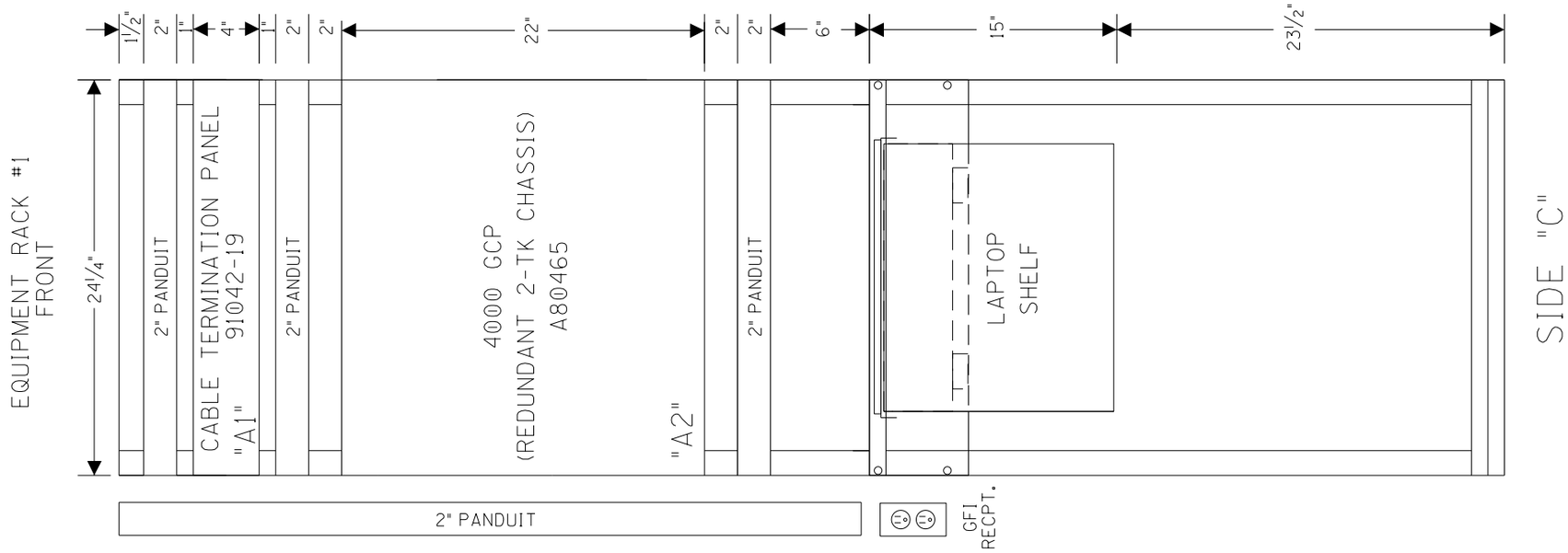

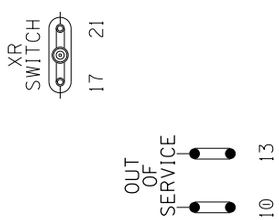

HOUSE SIDE C LAYOUT &
RACK PLACEMENT

"CA" "CB" "CC" "CD" "CE" "CF" "CG"

REVISION INITIALS										

PROPERTY
PENNSYLVANIA R. R.

DESIGNED BY: TAH 06-15-18	NORFOLK SOUTHERN	
DRAWN BY: RSD 06-15-18	OFFICE OF ASS'T. VICE PRESIDENT COMM. & SIGNAL, ATLANTA, GA.	M.P.: RD-056.87
CHECKED BY: BES 06-15-18	HOMEWORTH, OH FLGS AT ESSICK RD. (TR 703)	
IN SERVICE: - -	CLEVELAND LINE	FILE No. R-
	CADD or DWG. No. 24260569.20	SHEET No. 20 of 22

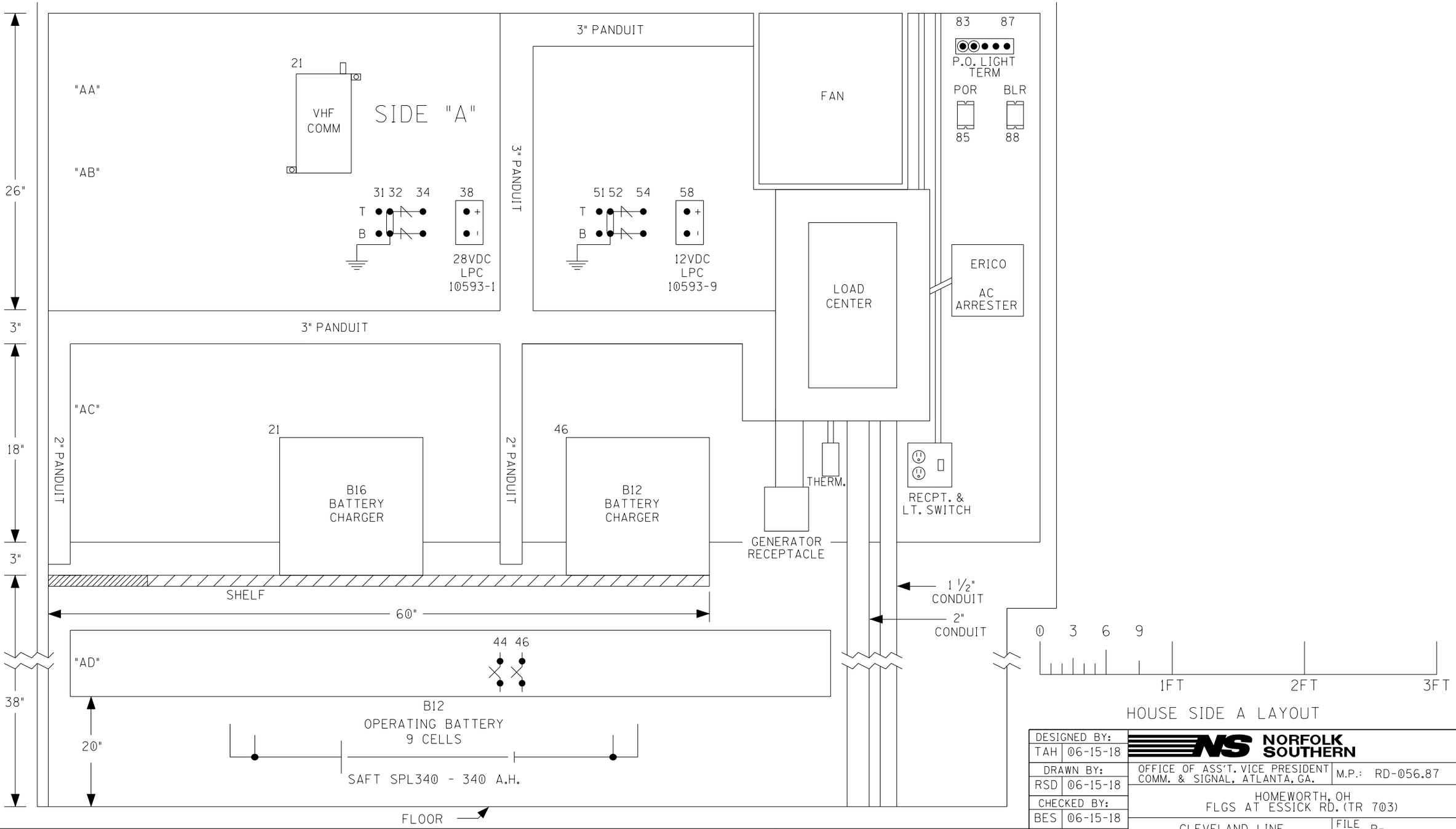

HOUSE SIDE A LAYOUT

DESIGNED BY: TAH 06-15-18	NORFOLK SOUTHERN		
DRAWN BY: RSD 06-15-18	OFFICE OF ASS'T. VICE PRESIDENT COMM. & SIGNAL, ATLANTA, GA.	M.P.: RD-056.87	
CHECKED BY: BES 06-15-18	HOMEWORTH, OH FLGS AT ESSICK RD. (TR 703)		
IN SERVICE: - -	CLEVELAND LINE	FILE No. R-	
	CADD or DWG. No. 24260569.21	SHEET No. 21 of 22	

REVISION INITIALS										

PROPERTY
PENNSYLVANIA R. R.

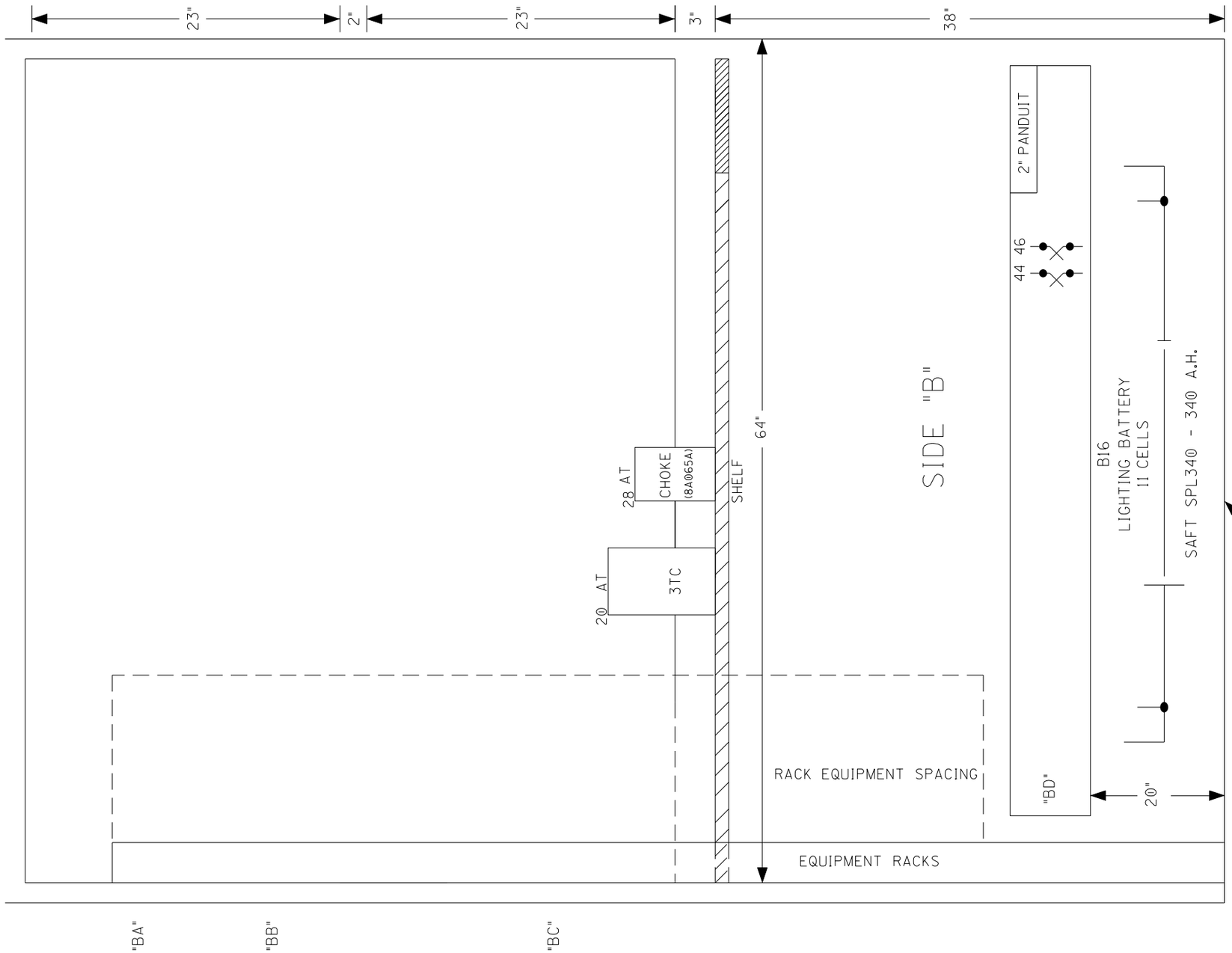

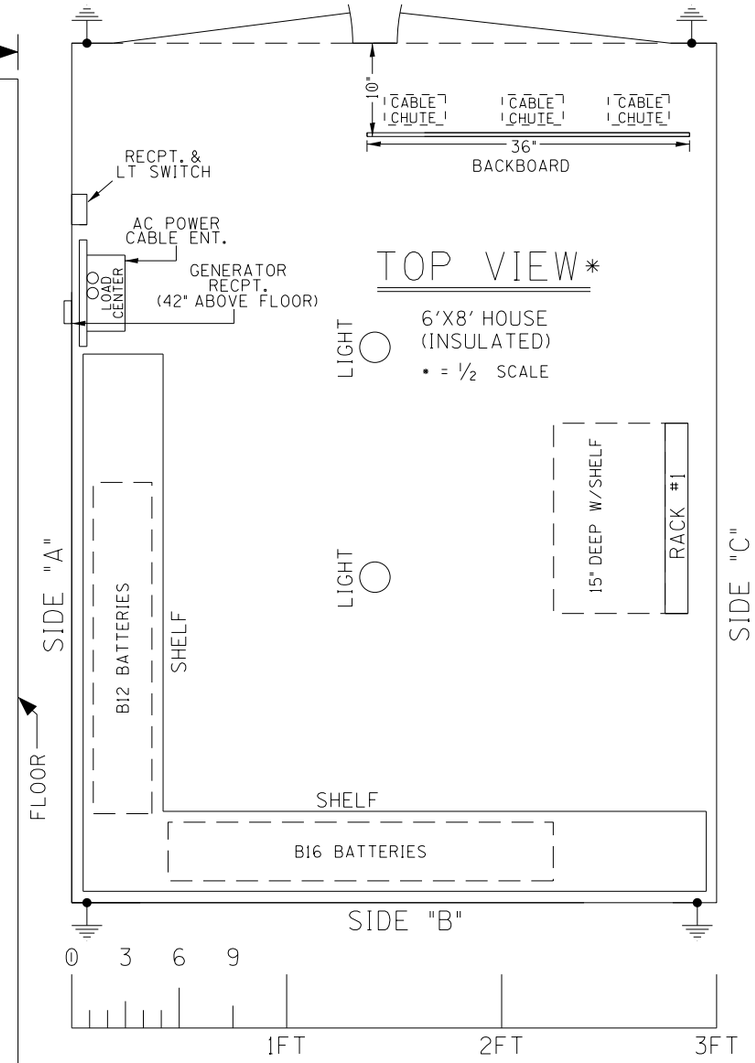

HOUSE SIDE B LAYOUT & TOP VIEW

DESIGNED BY: TAH 06-15-18	NORFOLK SOUTHERN	
DRAWN BY: RSD 06-15-18	OFFICE OF ASS'T. VICE PRESIDENT COMM. & SIGNAL, ATLANTA, GA.	M.P.: RD-056.87
CHECKED BY: BES 06-15-18	HOMEWORTH, OH FLGS AT ESSICK RD. (TR 703)	
IN SERVICE: - -	CLEVELAND LINE	FILE No. R-
	CADD or DWG. No. 24260569.22	SHEET No. 22 of 22

REVISION INITIALS											

PROPERTY
PENNSYLVANIA R. R.

OHIO RAIL DEVELOPMENT COMMISSION

Mail Stop #3140, 1980 West Broad Street, Columbus OH 43223

John R. Kasich, Governor • Mark Policinski, ORDC Chairman

March 19, 2018

Mr. Stephen J. Klinger
Norfolk Southern
Administrator Grade Crossing Program
1200 Peachtree Street NE, Box 123
Atlanta, Ga. 30324

RE: Columbiana County-TR704/Essick Rd, DOT# 544-878J, PID# 107031.

Dear Mr. Klinger:

A diagnostic review was held at the above grade crossing on October 13, 2017. The crossing has been recommended for the installation of lights and roadway gates.

Norfolk Southern (NS) is authorized to proceed with the site plans and cost estimates (PE) or bid package for this project. This authorization is made with the stipulation and understanding that any field work needs prior approval before work begins. This authorization is made with the stipulation and understanding that an approved estimate may contain entries for items or activities that may be cited and found to be ineligible for federal participation during the project audit.

The diagnostic review form is attached. Please note any recommendations (page 5), if any, made by the team with regard to requirements for this location. Any minor roadway work necessary for MUTCD compliance should be incorporated into the PE and such costs will flow through the railroad reimbursement process.

The Project Manager for this project is James Tucker. James can be reached at (614) 398-6897, or james.tucker@dot.ohio.gov, if you have any questions.

Sincerely,

Project Manager

C: Randall Schumacher, Supervisor, Rail Division, PUCO
Jill Henry, Grade Crossing Planner, PUCO
Susan Arduini, ORDC
ORDC (file)

Attachment: 1 (diagnostic review form)

Ohio | Public Utilities Commission
Asim Z. Haque, Chairman

Commissioners
M. Beth Trombold
Thomas W. Johnson
Lawrence K. Friedeman
Daniel R. Conway

December 27, 2017

Norfolk Southern Railroad
Mr. Stephen Klinger
Administrator Highway Grade Crossing Improvements
1200 Peachtree Street
Atlanta, GA 30309-3597

RE: Bayard Road/TR 703 DOT#544-856J
Essick Road/TR 704 DOT#544-878J
Columbiana County
Hereinafter referred to as the
"Projects"

Dear Mr. Klinger:

The Public Utilities Commission of Ohio (PUCO) has identified and the Ohio Rail Development Commission (ORDC) surveyed, on October 13, 2017, the above mentioned grade crossings for warning device upgrades. The locations have been approved for flashing lights and roadway gates.

The Projects shall comply with Agreement No. 17450, dated December 19, 2012, entered into by the State of Ohio and Norfolk Southern Railway Company (NS). Furthermore, the RAILROAD shall comply with all applicable state and federal laws governing grade crossing safety programs.

Reimbursable costs will be limited by ORDC based upon approved estimates and bid tabulations, if applicable. These limits will be quantified by the ORDC in its construction authorization to the RAILROAD and may be amended by the ORDC based upon revised estimates and bid tabulations. Additional costs must be approved in writing by the ORDC prior to being incurred. Emergency verbal authorizations by ORDC may be permitted but must be confirmed in writing within ten (10) business days of the verbal approval.

The RAILROAD shall complete plans and estimates for the Projects within ninety (90) days after the RAILROAD is notified of authorization to proceed unless otherwise agreed by ORDC/PUCO and the RAILROAD.

The RAILROAD shall not commence construction prior to PUCO's Order or ORDC's construction authorization. The RAILROAD shall provide written notification of the construction start date to PUCO and ORDC no later than five (5) business days prior to such date.

NS LA
Bayard Road/TR 703 DOT#544-856J
Essick Road/TR 704 DOT#544-878J
Columbiana County

Please indicate your acceptance of the terms and conditions of this Letter of Agreement by signing and returning one (1) copy to Ms. Jill Henry, Rail Specialist, Rail Division, Public Utilities Commission of Ohio, 180 E. Broad Street, Columbus, Ohio 43215-3793.

Sincerely,

Milan Orbovich
Director of Transportation
Public Utilities Commission of Ohio

Date 12/27/17

Norfolk Southern Railway Company

By _____

Title _____

Date _____

for
Matthew Dietrich
Executive Director
Ohio Rail Development Commission

Date 12/28/17

NS LA
Bayard Road/TR 703 DOT#544-856J
Essick Road/TR 704 DOT#544-878J
Columbiana County

Please indicate your acceptance of the terms and conditions of this Letter of Agreement by signing and returning one (1) copy to Ms. Jill Henry, Rail Specialist, Rail Division, Public Utilities Commission of Ohio, 180 E. Broad Street, Columbus, Ohio 43215-3793.

Sincerely,

Milan Orbovich
Director of Transportation
Public Utilities Commission of Ohio

Date 12/27/17

Norfolk Southern Railway Company

By Gregory R. Comstock

Title General Manager

Date 1/11/18

Matthew Dietrich
Executive Director
Ohio Rail Development Commission

Date

OHIO RAIL DEVELOPMENT COMMISSION

Ohio Rail Development Commission
Mail Stop 3140, 1980 W. Broad Street,
Columbus, OH 43223

Diagnostic Review Team Survey

Reason for Survey: (e.g. formula, accident, constituent, etc.) Constituent

Date: 10-13-17

Location Data

Street or Road Name: Essick Road

Route/Road Number (i.e. Twp., Co., SR or US): TR 704

US DOT No.: 544878J

County: Col

Township: West

City: (In or Near) Near Bayard

Railroad Name: Norfolk Southern

Railroad Division: Pittsburgh

Branch/Line Name: Cleveland

Nearest RR Timetable Station:

RR Milepost: 56.87

On-Site Review Team

(Include: Name – Organization – Phone Number – Email)

1. James Tucker ORDC 614-398-6897 James.tucker@dot.ohio.gov
2. Randy John PUCO 330-495-3810 Randy.John@
3. Eric Wiseman NS 540-577-8021 Eric.Wiseman@nscorp.com
4. William Helscel Columbiana County ENG 330-424-1740 bHelscel@CCENG.org
5. Dale Tommiller 330 771 2646 West Twp.
6.
7.
8.
9.

Existing Traffic Control Devices

Type of Warning Devices	Installed?		Quantity/Comments
Advance Warning Signs (condition?)	☒ Yes	☐ No	1 good 1 - needs replaced
'Stop' Signs	☒ Yes	☐ No	2
'Stop Ahead' Signs	☐ Yes	☒ No	
Pavement Markings (condition?)	☐ Yes	☒ No	
Crossbucks	☒ Yes	☐ No	2
Number of Tracks Signs	☐ Yes	☒ No	
Inventory Tags	☒ Yes	☐ No	
Interconnected Highway Traffic Signal	☐ Yes	☒ No	
Mast-Mounted Flashing Lights	☐ Yes	☒ No	
Cantilever Flashing Lights	☐ Yes	☒ No	Number: Length:
Side Lights	☐ Yes	☒ No	
Automatic Gates	☐ Yes	☒ No	Number: Length:
Bells	☐ Yes	☒ No	Number:
Sidewalk Gate Arms	☐ Yes	☒ No	
'No Turn' Signs	☐ Yes	☒ No	
Illumination	☐ Yes	☒ No	
Is crossing flagged by train crew?	☐ Yes	☒ No	
Other	☐ Yes	☐ No	

UPDATED (04/2013)

Safety Data (Obtain crash reports, if possible, prior to review)

	Initial Information (from database)	Revised
Number & dates of crashes in previous 5 years	0 (10/17/2011)	
Hazard Ranking	2158 Date Run: 9/18/2017	1321 10/16/17

Railroad Data

Railroad Characteristics	Initial Information (from database)	Revised
Total trains per day	~~12~~	37 week / 5- DAY
< 1 per day		
Day thru trains	~~5~~	3
Night thru trains	~~5~~	2
Daytime switching movements	~~2~~	Ø
Nighttime switching movements		
Total number of tracks	1	
Number of main tracks	1	
Number of other tracks		
Maximum train speed	~~30~~	40
Typical train speed	~~30~~	40
Amtrak		

If non-gated crossing, is clearing sight distance adequate in all quadrants? (See Table 1) ☒ Yes ☐ No

If multiple tracks, can two trains occupy crossing at the same time? ☐ Yes ☒ No

Can one train block the motorists' view of another train at crossing? ☐ Yes (Explain below) ☒ No

Can one or more tracks be eliminated through the crossing? ☐ Yes ☒ No

Are there other track(s) crossing this same roadway within 100 ft of this crossing? ☐ Yes ☒ No

If yes, Crossing DOT #(if different) _____

If yes, distance _____ (take measurement between track centerlines at closest point along roadway)

Roadway Data

Local Highway Authority: West Township

Roadway Characteristics	Initial Information (from database)	Revised
Average daily traffic	113 (2010)	525 (10-17)
Highway paved	X Yes ☐ No	☐ Yes ☐ No

Roadway Surface: ☒ Blacktop ☐ Gravel ☐ Concrete ☐ Other _____

Roadway width: 16 ft.

Number of highway lanes	2	
Urban or Rural	Rural	
Vehicle Speed: 55 MPH		

School Bus Operation: ☐ No ☒ Yes 6 Amount

Hazardous Materials Trucks: ☐ No ☒ Yes .05 Amount

Shoulders: ☐ No ☒ Yes

Is the shoulder surfaced? ☒ No ☐ Yes

Is there existing guardrail along roadway in crossing vicinity? ☒ No ☐ Yes

Is stopping site distance adequate? (See Table 2) ☐ Yes ☒ No If no, deficient approach(es) Both

Quadrant _____ Curb and Gutter:	Quadrant _____ Curb and Gutter:
☐ Functional (Curb height = 4" or more)	☐ Functional (Curb height = 4" or more)
☐ Non-functional (Curb height = Less than 4")	☐ Non-functional (Curb height = Less than 4")
☒ None	☒ None

Pedestrians: ☐ No ☒ Yes

Is sidewalk present? ☒ No ☐ Yes

Is there a nearby intersection that could cause queuing over the crossing? ☒ No ☐ Yes

If yes,

Distance _____

Is this intersection signalized? ☒ No ☐ Yes

Are the signals currently interconnected with the existing crossing warning devices? ☒ No ☐ Yes

Is there a 'Do not Stop on Track' sign? ☒ No ☐ Yes

Is a roadway improvement project (e.g. widening, turn lanes, nearby new or upgraded traffic signal, sidewalk) planned at or near this location in the foreseeable future? ☒ No ☐ Yes

If yes,

Improvement type_____ Lead Agency _____ Timeline/completion -

Is it the consensus of the Diagnostic Review Team that this is a potential closure project: ☒ No ☐ Yes

Explain reasons:

Type of Development

		Location of nearby schools:
☒ Open Space	☐ Institutional	Minerva local schools
☐ Industrial	☒ Commercial	
☒ Residential		

Utility Information

Is commercial power available? ☐ No ☒ Yes

Utility Provider (Company Name) Ohio Edison Phone Number _____

Nearest Available Power Source _____

What other utilities are present? (add locations to sketch)
☐ Gas ☐ Cable ☒ Telephone ☐ Fiber Optic Cable
☐ Petroleum ☐ Water ☐ Sanitary Sewer
☐ Other _____

Is(are) there potential utility conflict(s) ☐ Yes ☐ No ☒ Unknown

Comments:

Potential Red Flags / Project Challenges

Traffic Signal Preemption (include traffic signal intersection name and LHA with jurisdiction over traffic signal, if known):

N/A

Crossing Consolidation or Closure:

N/A

Real Estate or ROW:

N/A

Culverts / Drainage / Ballast Conditions:

N/A

Roadway and/or Sidewalks:

N/A

Circuitry (e.g. reaches out to other crossings, specific needs, etc.):

~~N/A~~ Possible Repeater Location South of crossing

Environmental:

N/A

Other:

Diagnostic Team Recommendations

	Quadrants Needed
☐ Install/upgrade active devices	
☐ Automatic Flashing Lights (AFLS)	
☐ AFLS /Cants	
☒ AFLS / Gates	NE + SW
☐ AFLS / Gates / Cants	
☒ Bells / number	1 - SW
☐ Upgrade circuitry / type	
☒ Sidelights	1 - aim @ Hill (TA-703)
☐ Guardrail Needed	
☐ Install/Replace curb	
☐ Bungalow placement & offset from rail & highway	
☐ Other (define)	

Comments: Sidelight for Bayard Hill

☐ Install/upgrade traffic signal preemption	
☐ No improvements needed	

☐ Other (define)

Acknowledgement of Recommendations (each entity represented at the diagnostic must have at least one signature acknowledgement):

J. T. R. John Glenn Whitehead

E. M. W. Dale Lowmiller

Field Dimensions

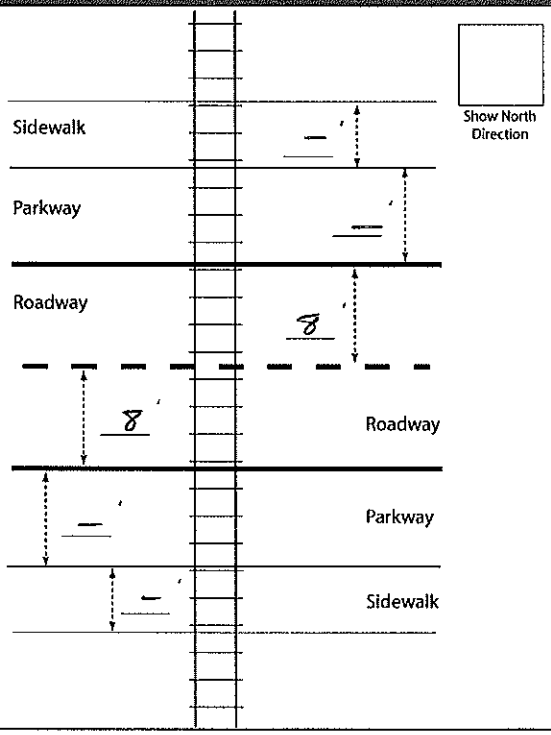

I told LHA that the Hazard rankings would need to be run with the updated numbers to determine if ORDC could fund this location. If not they could work with the PUCO on a cost/share project.

JT 10-13-17

Field Sketch

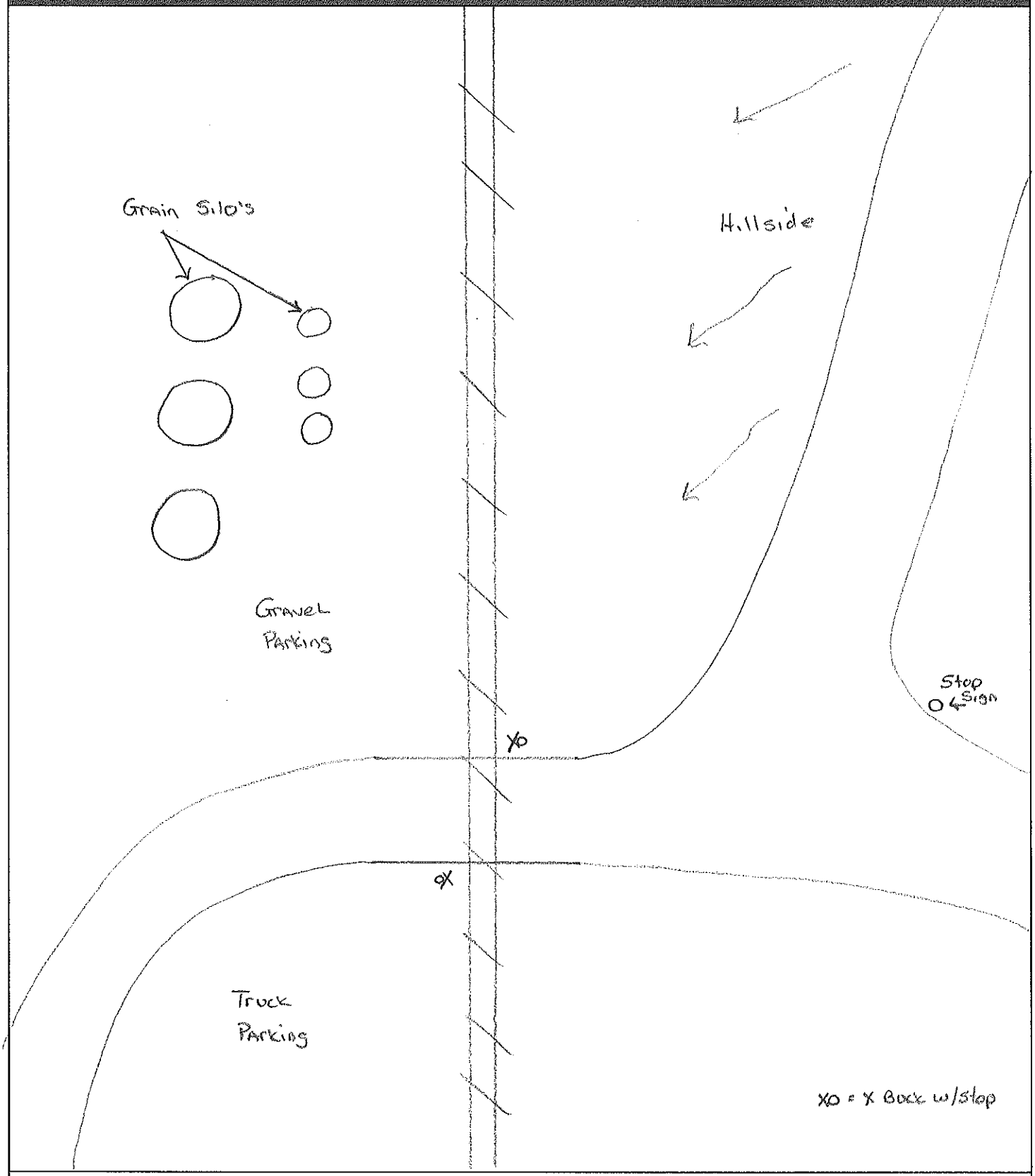

Crossing Angle ☐ 0-29° ☐ 30-59° ☒ 60-90° Measured in _____ Quadrant?

Sketch by: JT

Table 1

Clearing Sight Distances

Maximum Authorized Train Speed	Distance (dT) Along Railroad from Crossing (ft)
1 - 10	240
15	360
20	480
25	600
30	720
35	840
40	960
45	1080
50	1200
55	1320
60	1440
65	1560
70	1680
75	1800
80	1920
85	2040
90	2160

Source: R-H Grade Crossing Handbook Table 36 (pp. 132-133)

Notes:

All calculated distances are rounded up to the next higher 5-foot increment.

Distances indicated are for 65-ft double bottom semi-tractor trailers and level single track 90 degree crossings; and may need to be adjusted for multiple tracks, skewed crossings or approaches on grades.

Clearing Sight Distance is to be measured in each vehicle travel direction at non-gated crossings as viewed from a point 25 feet from centerline of nearest track in the center of whichever travel lane is nearest the direction along track being measured.

Table 2

Stopping Sight Distances

Highway Vehicle Speed	Distance (dH) Along Roadway from Crossing (ft)
0	n/a
5	50
10	70
15	105
20	135
25	180
30	225
35	280
40	340
45	410
50	490
55	570
60	660
65	760
70	865

Source: R-H Grade Crossing Handbook Table 36 (pp. 132-133)

Notes:

All calculated distances are rounded up to the next higher 5-foot increment.

Distances indicated are for 65-ft double bottom semi-tractor trailers on dry level pavements.

Stopping Sight Distance is to be measured on each roadway approach to crossing from stop bar.

This foregoing document was electronically filed with the Public Utilities

Commission of Ohio Docketing Information System on

9/13/2018 9:18:29 AM

in

Case No(s). 18-1420-RR-FED

Summary: Application In the Matter of a Request for the Installation of Active Warning Devices at the Norfolk Southern Railway Crossing, Essick Road/TR 704 DOT#544-878J, in Columbiana County, Ohio. electronically filed by Mrs. Jill A Henry on behalf of PUCO/Rail Division