REF. DRAWINGS

ITEM	QTY.	ASSEMBLY	DESCRIPTION	
1	1	74E0-1272	ALL HEAVY SUSPENSION CROSSARM 40 FT - CONCRETE OR STEEL H-FRAME - GALVANIZED	
2	3	11B6-2722	138KV SUSPENSION INSULATOR, POLYMER, 25K, W/CORONA RING	
3	2	30T0-1102	OHGW, SUSPENSION, CONCRETE, STEEL OR WOOD POLE	
4	2	21SE-1456	GROUND ROD FOR DIRECT EMBEDDED STEEL POLE	
5	2	71A0-1971	A449 1IN - HIGH STRENGTH DOUBLE ARMING BOLT, CONCRETE OR STEEL	

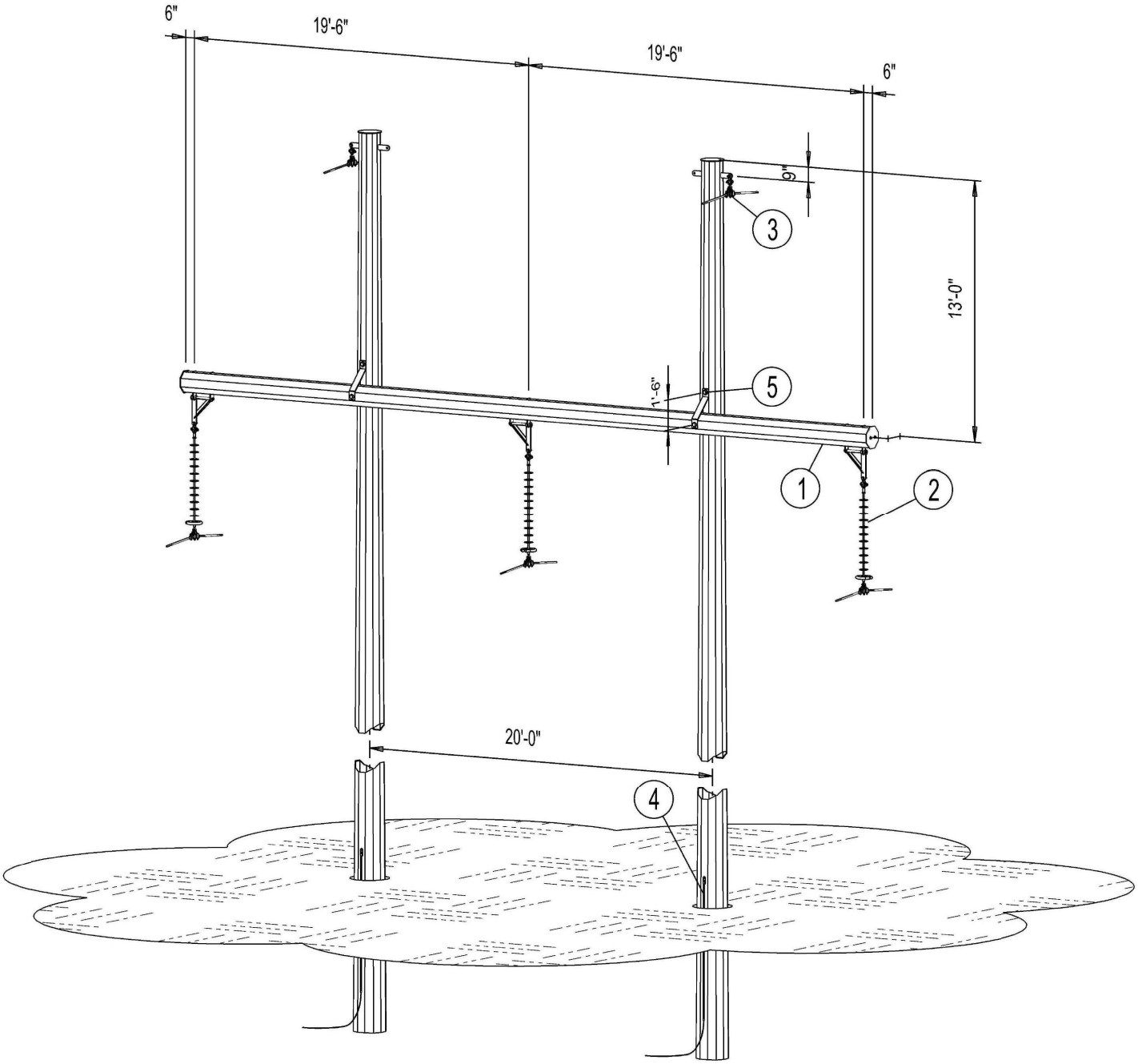

AMERICAN ELECTRIC POWER COMPANY, INC. DISCLAIMS ANY AND ALL WARRANTIES WITH RESPECT TO THE ACCURACY OR USE OF THIS DRAWING WHETHER EXPRESSED OR IMPLIED, INCLUDING SPECIFICALLY THE IMPLIED WARRANTIES OF MERCHANTABILITY AND FITNESS FOR A PARTICULAR PURPOSE. THIS DRAWING IS PROVIDED "AS IS", AND THE USER AGREES THAT IT ASSUMES ALL RISKS OF ITS USE, QUALITY, AND PERFORMANCE."

REV	DESCRIPTION	BY	DATE
1	REVISED BILL OF MATERIAL	McP	04/30/15

AEP AMERICAN ELECTRIC POWER

TRANSMISSION LINE STANDARDS

POLYMER - 138KV HEAVY SUSPENSION W/CORONA RING, H-FRAME, GALVANIZED STEEL

ENGR:	DRAWN: SAS	CHECKED: McP	APPROVED: JCN	DATE: 10/23/12	DRAWING No. CS45-2472	SHEET No. 1	REV. No. 1

Archive ID: 905-534

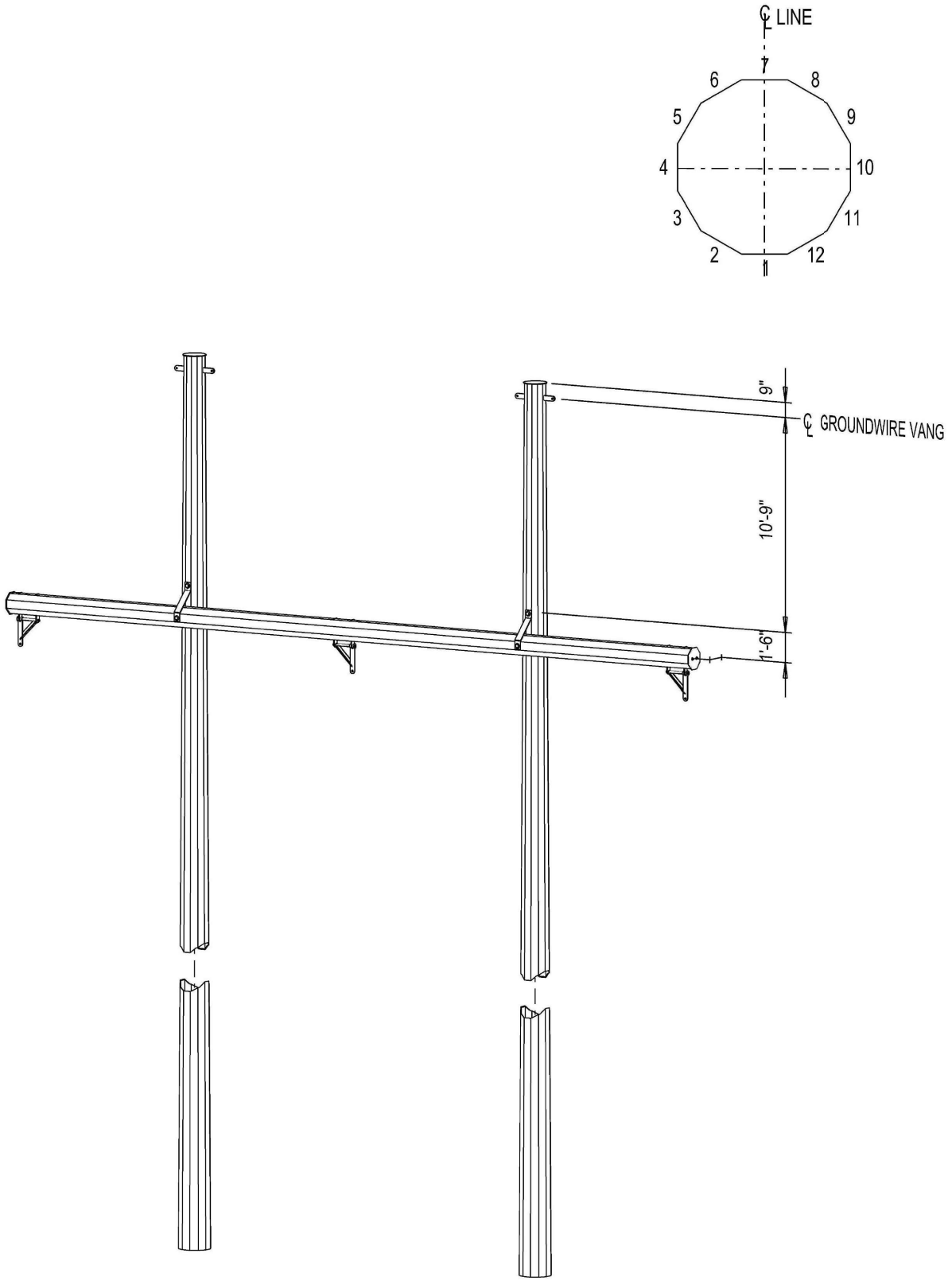

NOTES:

1. ALL HOLES SHALL BE 1 1/16"Ø UNLESS NOTED
2. ALL HOLES ON AXIS "1-7" AND VANGS ARE ON AXIS "4-10"
3. REFER TO DRAWING NO. 01D5-1225 FOR VANG DETAILS

AMERICAN ELECTRIC POWER COMPANY, INC. DISCLAIMS ANY AND ALL WARRANTIES WITH RESPECT TO THE ACCURACY OR USE OF THIS DRAWING WHETHER EXPRESSED OR IMPLIED, INCLUDING SPECIFICALLY THE IMPLIED WARRANTIES OF MERCHANTABILITY AND FITNESS FOR A PARTICULAR PURPOSE. THIS DRAWING IS PROVIDED "AS IS", AND THE USER AGREES THAT IT ASSUMES ALL RISKS OF ITS USE, QUALITY, AND PERFORMANCE."

REV	DESCRIPTION	BY	DATE
1	REVISED BILL OF MATERIAL	McP	04/30/15

AEP AMERICAN ELECTRIC POWER

TRANSMISSION LINE STANDARDS
DRILL LOCATIONS
POLYMER - 138KV HEAVY SUSPENSION
W/CORONA RING,
H-FRAME, GALVANIZED STEEL

ENGR:	DRAWN: SAS	CHECKED: McP	APPROVED: JCN	DATE: 10/23/12

DRAWING No. CS45-2472 | SHEET No. 2 | REV. No. 1

Archive ID: 905-534

REF. DRAWINGS

ITEM	QTY.	ASSEMBLY	DESCRIPTION	
1	1	74E0-1272	ALL HEAVY SUSPENSION CROSSARM 40 FT - CONCRETE OR STEEL H-FRAME - GALVANIZED	
2	3	11B6-2722	138KV SUSPENSION INSULATOR, POLYMER, 25K, W/CORONA RING	
3	2	30T0-1102	OHGW, SUSPENSION, CONCRETE, STEEL OR WOOD POLE	
4	2	21SE-1456	GROUND ROD FOR DIRECT EMBEDDED STEEL POLE	
5	2	71A0-1971	A449 1IN - HIGH STRENGTH DOUBLE ARMING BOLT, CONCRETE OR STEEL	
6	2	42C0-1117	GUY WIRE ASSEMBLY (AW), MEDIUM (25K) CORROSIVE ZONE	
7	2	50A0-1106	SCREW ANCHOR 3 HELIX	
8	2	25S1-2305	GROUNDING ASSEMBLY FOR GUY WIRE ON STEEL POLE	

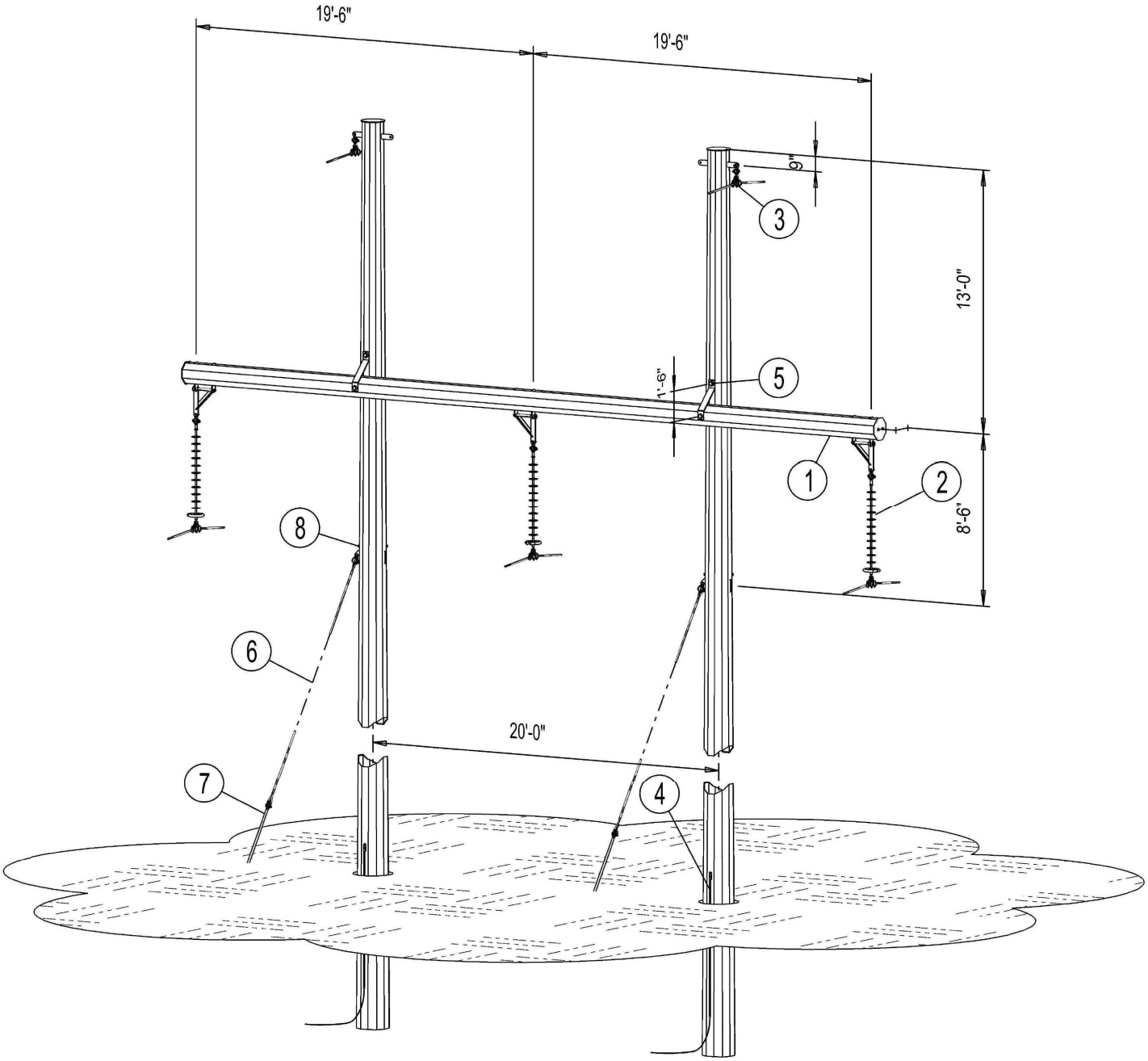

NOTES:
1. SEE PLAN & PROFILE DWG. FOR GUYING DETAILS

AMERICAN ELECTRIC POWER COMPANY, INC. DISCLAIMS ANY AND ALL WARRANTIES WITH RESPECT TO THE ACCURACY OR USE OF THIS DRAWING WHETHER EXPRESSED OR IMPLIED, INCLUDING SPECIFICALLY THE IMPLIED WARRANTIES OF MERCHANTABILITY AND FITNESS FOR A PARTICULAR PURPOSE. THIS DRAWING IS PROVIDED "AS IS", AND THE USER AGREES THAT IT ASSUMES ALL RISKS OF ITS USE, QUALITY, AND PERFORMANCE."

REV	DESCRIPTION	BY	DATE
1	REVISED BILL OF MATERIAL	McP	04/30/15

AEP AMERICAN ELECTRIC POWER

TRANSMISSION LINE STANDARDS

POLYMER - 138KV HEAVY SUSPENSION W/CORONA RING, H-FRAME, GALVANIZED STEEL, 2B2

ENGR:	DRAWN: SAS	CHECKED: McP	APPROVED: JCN	DATE: 10/23/12	DRAWING No. CS45-2473	SHEET No. 1	REV. No. 1

Archive ID: 905-535

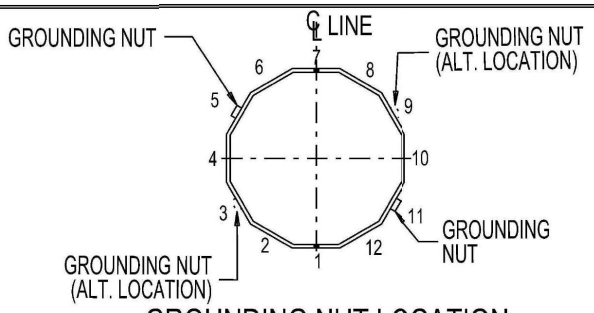

GROUNDING NUT LOCATION

¾"Ø GROUNDING NUTS TACK WELDED ON FLAT
ADJACENT TO HOLES AS NOTED
IN ORDER TO BOND GUY WIRES TO THE POLE.
ONE NUT REQURED FOR EACH DEADEND/GUY TEE HOLE
FOR EACH GROUNDING NUT FABRICATOR SHALL SUPPLY:
1 - ¾"Ø x 1" LG. H.H. BOLT
1 - ¾" Ø LOCKWASHER
SHIP ASSEMBLED

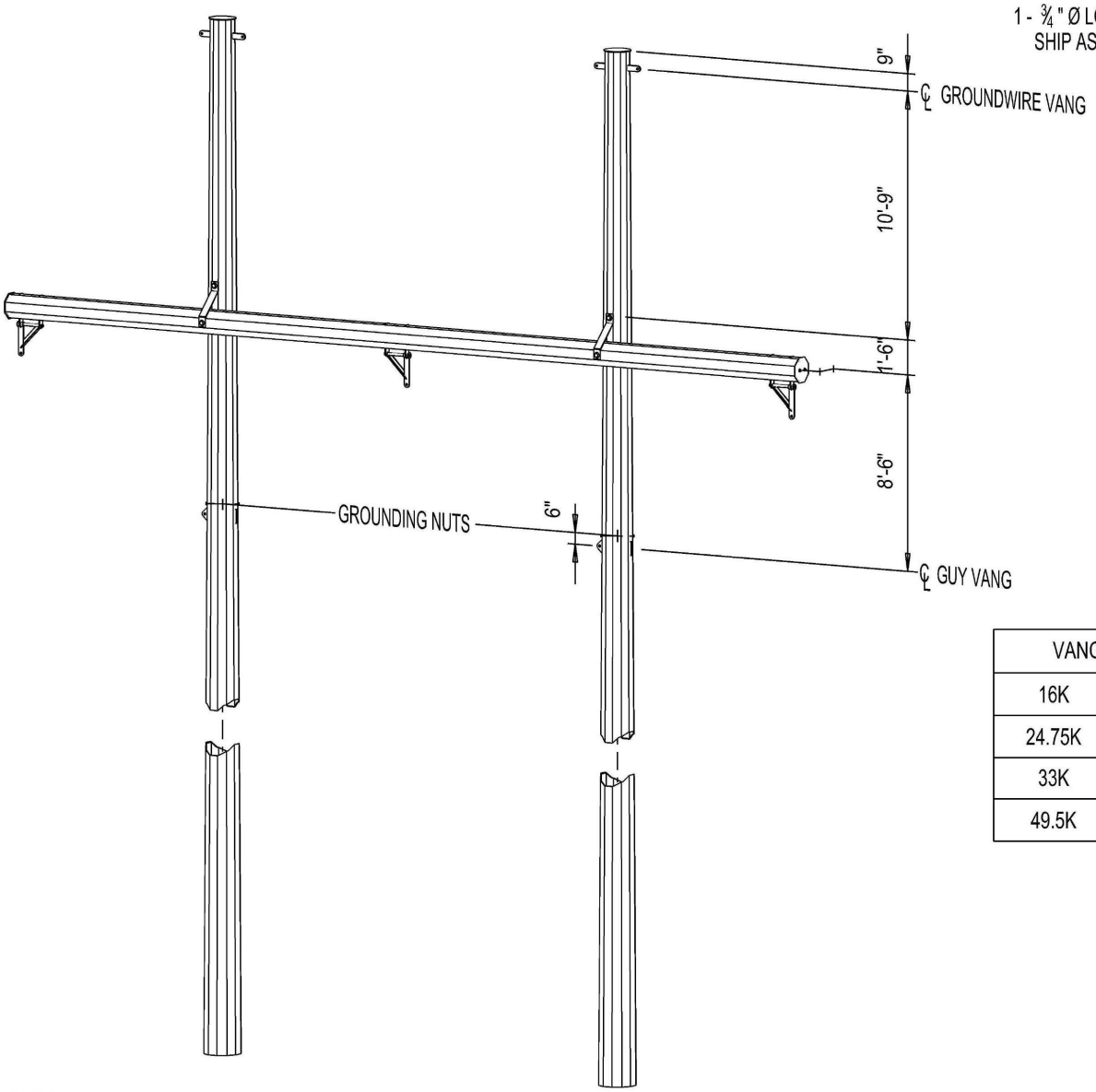

VANG TABLE	
16K	
24.75K	
33K	
49.5K	

NOTES:

1. ALL HOLES SHALL BE 1 1/16"Ø UNLESS NOTED
2. ALL HOLES ON AXIS "1-7" AND VANGS ARE ON AXIS "4-10"
3. REFER TO DRAWING NO. 01D5-1225 FOR VANG DETAILS

AMERICAN ELECTRIC POWER COMPANY, INC. DISCLAIMS ANY AND ALL WARRANTIES WITH RESPECT TO THE ACCURACY OR USE OF THIS DRAWING WHETHER EXPRESSED OR IMPLIED, INCLUDING SPECIFICALLY THE IMPLIED WARRANTIES OF MERCHANTABILITY AND FITNESS FOR A PARTICULAR PURPOSE. THIS DRAWING IS PROVIDED "AS IS", AND THE USER AGREES THAT IT ASSUMES ALL RISKS OF ITS USE, QUALITY, AND PERFORMANCE."

REV	DESCRIPTION	BY	DATE
1	REVISED BILL OF MATERIAL	McP	04/30/15

AEP AMERICAN ELECTRIC POWER

TRANSMISSION LINE STANDARDS
DRILL LOCATIONS
POLYMER - 138KV HEAVY SUSPENSION
W/CORONA RING,
H-FRAME, GALVANIZED STEEL, 2B2

ENGR:	DRAWN: SAS	CHECKED: McP	APPROVED: JCN	DATE: 10/23/12	DRAWING No. CS45-2473	SHEET No. 2	REV. No. 1

Archive ID: 905-535

Appendix C: Ecological Report

Summerfield-Berne 138 kV Transmission Line Rebuild Project, Monroe and Noble Counties, Ohio

Ecological Resources Inventory Report

Prepared for:

AEP Ohio Transmission Company, Inc.
700 Morrison Road
Gahanna, Ohio 43230

Electrical Consultants, Inc.
3521 Gabel Road
Billings, Montana 59102

Prepared by:

Stantec Consulting Services Inc.
11687 Lebanon Road
Cincinnati, Ohio 45241

December 21, 2017

Table of Contents

1.0 INTRODUCTION 1

2.0 METHODS 2
2.1 WETLAND DELINEATION 2
2.2 STREAM DELINEATION 2
2.3 RARE SPECIES 2

3.0 RESULTS 3
3.1 TERRESTRIAL HABITAT 3
3.2 WETLANDS 4
3.3 STREAMS 5
3.4 RARE, THREATENED, OR ENDANGERED SPECIES HABITAT 7

4.0 CONCLUSIONS AND RECOMMENDATIONS 11

5.0 REFERENCES 13

LIST OF TABLES

Table 1. Vegetation Communities and Land Cover Found within the Summerfield-Berne 138 kV Transmission Line Rebuild Project Area, Monroe and Noble Counties, Ohio 3
Table 2. Summary of Wetland Resources Found within the Summerfield-Berne 138 kV Transmission Line Rebuild Project Area, Monroe and Noble Counties, Ohio 5
Table 3. Summary of Stream Resources Found within the Summerfield-Berne 138 kV Transmission Line Rebuild Project Area, Monroe and Noble Counties, Ohio 5
Table 4. Summary of Potential Ohio State-Listed Species within the Summerfield-Berne 138 kV Transmission Line Rebuild Project Area, Monroe and Noble Counties, Ohio 7
Table 5. Summary of Potential Federally-Listed Species within the Summerfield-Berne 138 kV Transmission Line Rebuild Project Area, Monroe and Noble Counties, Ohio 10

LIST OF APPENDICES

APPENDIX A FIGURES A.1
A.1 Figure 1 – Project Location Map A.1
A.2 Figure 2 – Wetland and Waterbody Delineation Map A.2
A.3 Figure 3 – Habitat Assessment Map A.3

APPENDIX B AGENCY CORRESPONDENCE B.1

APPENDIX C REPRESENTATIVE PHOTOGRAPHS C.1

APPENDIX D DATA FORMS D.1
D.1 Wetland Determination Data Forms D.1
D.2 ORAM Data Forms D.2
D.3 HHEI and QHEI Data Forms D.3

1.0 Introduction

AEP Ohio Transmission Company, Inc. (AEP) is proposing to rebuild/upgrade approximately 3.5 miles of existing 138 kilovolt (kV) transmission line between the Berne Station facility in Monroe County and the Summerfield Station facility in Noble County, Ohio (Figure 1, Appendix A). The Project will include the rebuild/upgrade of structures within the existing AEP right–of–way (ROW) and potentially upgrading/expanding the Summerfield Station facility. The Project area was surveyed for wetlands, waterbodies, open water features, upland drainage features, and potential threatened, endangered, and rare species habitat by Stantec Consulting Services Inc. (Stantec) biologists on June 15 through 16, 2017, and July 20 through 21, 2017. The approximate locations of features located up to 50 feet outside of the Project area limits were also recorded during the field surveys, where landowner access was permitted. However, no data forms were collected on features that did not extend into the Project area. These features are shown on the Figure 2 maps in Appendix A as "approximate" wetlands, streams (waterways), open waters, and upland drainage features.

2.0 Methods

2.1 WETLAND DELINEATION

Prior to completing the field surveys, a desktop review of the Project area was conducted using U.S. Geological Survey (USGS) topographic mapping, National Wetlands Inventory (NWI) maps, U.S. Department of Agriculture (USDA) Natural Resources Conservation Service (NRCS) soil surveys, and aerial imagery mapping. Stantec completed a wetland delineation study in accordance with the *Corps of Engineers Wetlands Delineation Manual* (USACE 1987) and the *Regional Supplement to the Corps of Engineers Wetland Delineation Manual: Eastern Mountains and Piedmont Region* (Version 2.0) (USACE 2012). Wetland categories were classified using the Ohio Rapid Assessment Method (ORAM) for Wetlands Version 5.0 (Mack 2001).

2.2 STREAM DELINEATION

Streams that demonstrated a continuously defined channel (bed and bank), ordinary high water mark (OHWM), and the disturbance of terrestrial vegetation were delineated within the Project area, per the protocols outlined in the USACE's Guidance on Ordinary High Water Mark Identification (Regulatory Guidance Letter, No. 05-05) (USACE 2005). Delineated streams were classified as ephemeral, intermittent, or perennial per definitions in the Federal Register/Vol. 67, No. 10 (USACE 2002). Functional assessment of streams within the Project area was based on completion of the Ohio Environmental Protection Agency's (OEPA) Headwater Habitat Evaluation Index (HHEI; OEPA 2012) and/or Qualitative Habitat Evaluation Index (QHEI; OEPA 2006). The centerline of each waterway was identified and surveyed using a handheld sub-meter accuracy global positioning system (GPS) unit and mapped with geographic information system (GIS) software. Additionally, the locations of ponds/open water features and upland drainage features (which lacked a continuously defined bed and bank/OHWM) identified within the Project area were also recorded with a sub-meter accuracy GPS unit during the field surveys.

2.3 RARE SPECIES

Prior to conducting the field surveys, Stantec contacted the Ohio Department of Natural Resources (ODNR) and the U.S. Fish and Wildlife Service (USFWS) for information regarding rare, threatened, or endangered species and their habitats of concern within the vicinity of the Project area (Appendix B – Agency Correspondence). To assess potential impacts to rare, threatened, or endangered species, Stantec scientists conducted a pedestrian reconnaissance of the proposed Project area, collected information on existing habitats within the Project area, and assessed the potential for these habitats to be used by these species.

3.0 Results

3.1 TERRESTRIAL HABITAT

Stantec completed field surveys within the Project area on June 15 through 16, 2017, and July 20 through 21, 2017, for wetlands, waterbodies, and threatened and endangered species or their habitats. Figure 2 (Appendix A) shows the wetlands and waterbodies identified by Stantec within the Project area, as well as the locations of open waters and upland drainage features identified within the Project area. Figure 3 (Appendix A) shows the habitats and locations of any identified rare, threatened or endangered species observed within the Project area. Representative photographs of the wetlands, streams, upland drainage features, and other habitats identified within the Project area are included in Appendix C of this report (photo locations are shown on Figures 2 and 3, Appendix A). Completed wetland determination, ORAM, QHEI, and HHEI data forms are included in Appendix D.

Table 1. Vegetation Communities and Land Cover Found within the Summerfield-Berne 138 kV Transmission Line Rebuild Project Area, Monroe and Noble Counties, Ohio

Vegetation Communities and Land Cover Types within Project Area	Degree of Human-Related Ecological Disturbance	Unique, Rare, or High Quality?	Approximate Acreage Within Project Area
Mixed Early Successional/Second Growth Deciduous Forest	Moderate Disturbance/Natural Community (dominated by native woody and herbaceous species and/or opportunistic invaders).	No	9.95
Mixed Early Successional/ Second Growth Riparian Forest	Moderate Disturbance/Natural Community (dominated by native woody and herbaceous species and/or opportunistic invaders).	No	0.93
Early Successional Riparian Forest	Moderate Disturbance/Natural Community (dominated by native woody and herbaceous species and/or opportunistic invaders).	No	1.26
Old Field	Extreme Disturbance/Ruderal Community (dominated by opportunistic invaders and/or native highly tolerant taxa).	No	26.34
Pasture	Extreme Disturbance/Ruderal Community (dominated by opportunistic invaders and/or native highly tolerant taxa).	No	9.07
Existing Paved Roadway	Extreme Disturbance/existing paved road.	No	2.75

Vegetation Communities and Land Cover Types within Project Area	Degree of Human-Related Ecological Disturbance	Unique, Rare, or High Quality?	Approximate Acreage Within Project Area
Gravel Road	Extreme Disturbance/existing gravel road.	No	3.34
Industrial	Extreme Disturbance/Ruderal Community (dominated by opportunistic invaders, planted non-native species, and/or native highly tolerant taxa).	No	1.11
Hayfield	Extreme Disturbance/Ruderal Community (dominated by planted non-native herbaceous species, opportunistic invaders, or native highly tolerant taxa).	No	9.57
Dirt/Active Pipeline Construction Areas	Extreme Disturbance/Ruderal Community (dominated by areas of bare dirt, with opportunistic invaders, planted non-native species, and/or native highly tolerant taxa present to a lesser extent).	No	1.05
Cemetery	Extreme Disturbance/Ruderal Community (dominated by planted non-native herbaceous species, opportunistic invaders, or native highly tolerant taxa).	No	0.14
Palustrine Forested Wetland	Moderate Disturbance/Natural Community (dominated by native woody and herbaceous species and/or opportunistic invaders).	No	0.35
Palustrine Emergent Wetland	Moderate Disturbance/Natural Community (dominated by native herbaceous species and/or opportunistic invaders).	No	0.84
		Total	**66.70**

3.2 WETLANDS

Stantec completed field surveys for wetlands within the Project area on June 15 through 16, 2017 and July 20 through 21, 2017. Figure 2 (Appendix A) shows the wetlands identified by Stantec within the Project area. Representative wetland photographs are included in Appendix C of this report (photo locations are shown on Figure 2, Appendix A). Completed wetland determination and ORAM data forms are included in Appendix D. Information regarding the Cowardin classification and ORAM categories of wetlands identified within the Project area is provided in Table 2.

Table 2. Summary of Wetland Resources Found within the Summerfield-Berne 138 kV Transmission Line Rebuild Project Area, Monroe and Noble Counties, Ohio

Wetland Name	Photo Location Number[1]	Isolated?	Wetland Classification[2]	ORAM Score[5]	ORAM Category[5]	Delineated Area (acres) within Project Area
Wetland 1	2	No	PEM[3]	35	2	0.07
Wetland 2	13	No	PFO[4]	41	2	0.35
Wetland 3	15	Yes	PEM[3]	27	1	0.01
Wetland 4	18	No	PEM[3]	32.5	2	0.58
Wetland 5	19	Yes	PEM[3]	26	1	0.10
Wetland 6	20	No	PEM[3]	21.5	1	0.08
					TOTAL	**1.19**

[1] Appendix C – Representative Photographs as shown on Figure 2 (Appendix A).

[2] Wetland classification is based on Cowardin et al. (1979).

[3] PEM = Palustrine Emergent Wetland

[4] PFO = Palustrine Forested Wetland

[5] ORAM Score and Category are based on the Ohio Rapid Assessment Method for Wetlands v. 5.0 (Mack 2001).

3.3 STREAMS

Stantec completed field surveys for waterbodies within the Project area on June 15 through 16, 2017, and July 20 through 21, 2017. Figure 2 (Appendix A) shows the waterbodies (streams and open water features) identified by Stantec within the Project area, as well as the locations of non-jurisdictional upland drainage features identified within the Project area. Representative photographs of the streams, open waters, and upland drainage features are included in Appendix C of this report (photo locations are shown on Figure 2, Appendix A). Completed QHEI and HHEI data forms are included in Appendix D. Information regarding the streams identified within the Project area is provided in Table 3.

Table 3. Summary of Stream Resources Found within the Summerfield-Berne 138 kV Transmission Line Rebuild Project Area, Monroe and Noble Counties, Ohio

Stream Name	Photo Location Number[1]	Receiving Waters	Stream Flow Regime[2]	Stream Evaluation Method	Stream Evaluation Score	OHWM Width (feet)[3]	Delineated Length (feet) within Project Area
Stream 1	1	Mud Run	Ephemeral	HHEI	23	1.6	184
Stream 2	3	Mud Run	Ephemeral	HHEI	27	2.5	152

Stream Name	Photo Location Number[1]	Receiving Waters	Stream Flow Regime[2]	Stream Evaluation Method	Stream Evaluation Score	OHWM Width (feet)[3]	Delineated Length (feet) within Project Area
Stream 3	5	Mud Run	Ephemeral	HHEI	22	1.5	109
Stream 4	6	Mud Run	Ephemeral	HHEI	26	2.5	121
Stream 5 (Bishop Run)	8	South Fork Willis Creek	Perennial	HHEI	59	5	179
Stream 6	9	Bishop Run	Ephemeral	HHEI	24	1.5	102
Stream 7	10	South Fork Willis Creek	Perennial	QHEI	47.75	6	105
Stream 8	11	South Fork Willis Creek	Ephemeral	HHEI	17	1.5	90
Stream 9	12	South Fork Willis Creek	Ephemeral	HHEI	25	1	109
Stream 10 (Clear Fork Little Muskingum River)	14	Little Muskingum River	Intermittent	HHEI	64	5	160
Stream 11	16	Little Muskingum River	Intermittent	HHEI	47	2.5	107
Stream 12 (Clear Fork Little Muskingum River)	17	Little Muskingum River	Perennial	QHEI	56.5	12	141
Stream 13	21	Bishop Run	Ephemeral	HHEI	17	1	5
Stream 14 (Death Run)	22	Robinson Run	Perennial	QHEI/HHEI	53.5/70	12.5	340
Stream 15	23	Death Run	Ephemeral	HHEI	14	1	59
						TOTAL	**1,963**

[1]Appendix C – Representative Photographs as shown on Figure 2 (Appendix A)

[2] Stream classification is based on Federal Register/Vol. 67, No. 10 (USACE 2002)

[3] OHWM = Ordinary High Water Mark

3.4 RARE, THREATENED, OR ENDANGERED SPECIES HABITAT

Table 4. Summary of Potential Ohio State-Listed Species within the Summerfield-Berne 138 kV Transmission Line Rebuild Project Area, Monroe and Noble Counties, Ohio

Common Name	Scientific Name	State Listing[1]	Known to Occur in Monroe County?[2]	Known to Occur in Noble County?[2]	Known Within One Mile of Project Area?[3]	Habitat Preference	Habitat Observed in Project Area?	Impact Assessment	ODNR Comments/Recommendations
Amphibians									
Eastern Hellbender	*Cryptobranchus alleganiensis alleganiensis*	E	Yes	No	No	Found mostly in unglaciated portions of Ohio and prefers large, swift flowing streams where they hide under larger rocks (ODNR 2017b).	No	No suitable habitat was observed within the Project area and no in-water work will take place in perennial streams. Therefore, no impacts are anticipated.	Due to the location, and that there is no in-water work proposed in a perennial stream of sufficient size to provide suitable habitat, this project is not likely to impact this species.
Fish									
Channel Darter	*Percina copelandi*	T	Yes	No	No	Habitat includes warm, low and moderate gradient rivers and large creeks in areas of moderate current. This darter usually is found over sand and gravel substrates. It prefers clear water and silt-free bottoms. Channel darters may overwinter in quiet pools or backwaters. Spawning generally occurs over gravel, rubble, or rock-strewn bedrock in moderate or swift current (NatureServe 2017).	No	No suitable habitat was observed within the Project area and no in-water work will take place in perennial streams. Therefore, no impacts are anticipated.	The ODNR recommends no in-water work in perennial streams from April 15 to June 30 to reduce impacts to indigenous aquatic species and their habitat. If no in-water work is proposed in a perennial stream, this project is not likely to impact this species or other aquatic species.
Tippecanoe Darter	*Etheostoma tippecanoe*	T	Yes	No	No	This fish prefers medium to large streams in the Ohio River drainage system and are found in riffles of moderate current with substrates of gravel or cobble sized rocks (ODNR 2017b).	No	No suitable habitat was observed within the Project area and no in-water work will take place in perennial streams. Therefore, no impacts are anticipated.	The ODNR recommends no in-water work in perennial streams from April 15 to June 30 to reduce impacts to indigenous aquatic species and their habitat. If no in-water work is proposed in a perennial stream, this project is not likely to impact this species or other aquatic species.
River Darter	*Percina shumardi*	T	No	No	No	Large rivers and lower portions of tributaries; deep chutes and riffles where current is swift and bottom is coarse gravel or rock (NatureServe 2017).	No	No suitable habitat was observed within the Project area and no in-water work will take place in perennial streams. Therefore, no impacts are anticipated.	The ODNR recommends no in-water work in perennial streams from April 15 to June 30 to reduce impacts to indigenous aquatic species and their habitat. If no in-water work is proposed in a perennial stream, this project is not likely to impact this species or other aquatic species.
Ohio Lamprey	*Ichthyomyzon bdellium*	E	No	No	No	Ohio lampreys are only found in the Ohio River and the lower portions of its tributary streams. Spawning adults are found in clear brooks with fast flowing water and either sand or gravel bottoms. Juveniles are found in slow moving water buried in soft substrates of medium to large streams (ODNR 2017b).	No	No suitable habitat was observed within the Project area and no in-water work is proposed to occur in perennial streams. Therefore, no impacts are anticipated.	The ODNR recommends no in-water work in perennial streams from April 15 to June 30 to reduce impacts to indigenous aquatic species and their habitat. If no in-water work is proposed in a perennial stream, this project is not likely to impact this species or other aquatic species.

Common Name	Scientific Name	State Listing[1]	Known to Occur in Monroe County?[2]	Known to Occur in Noble County?[2]	Known Within One Mile of Project Area?[3]	Habitat Preference	Habitat Observed in Project Area?	Impact Assessment	ODNR Comments/Recommendations
Mussels									
Ohio Pigtoe	*Pleurobema cordatum*	E	Yes	No	No	This mussel prefers strong currents of large rivers with substrates of sand and gravel, though it is somewhat tolerant of lentic systems (NatureServe 2017).	No	No suitable habitat was observed within the Project area and no in-water work will take place in perennial streams. Therefore, no impacts are anticipated.	Due to the Project location and that there is no in-water work proposed in a perennial stream of sufficient size, the Project is not likely to impact this species.
Birds									
Northern Harrier	*Circus cyaneus*	E	Yes	Yes	No	Large, undisturbed tracts of wetlands and grasslands with low, thick vegetation (Cornell Lab of Ornithology 2016). Nests on the ground, commonly near low shrubs, in tall weeds or reeds, sometimes in bog; or on top of low bush above water, or on knoll of dry ground, or on higher shrubby ground near water, or on dry marsh vegetation. Sizes of hunting ranges vary widely during the breeding season in different areas. In two midwestern studies, the range sizes for pairs varied from 2.6 - 5.5 square kilometers. In North Dakota, breeding harriers were found only in grassland patches greater than 100 hectares (250 acres) (NatureServe 2017).	No	No suitable habitat was observed within the Project area. Therefore, no impacts are anticipated.	If potential habitat will be impacted, construction should be avoided in these areas between May 15 and August 1. If this type of habitat will not be impacted, the Project is not likely to impact this species.
Insects									
Regal Fritillary	*Speyeria idalia*	E	Yes	No	No	Occurs in tallgrass prairie remnants and other open sites including damp meadows, marshes, wet fields, and pastures (Butterflies and Moths of North America 2017).	Yes	Some potentially suitable habitat (pastures, palustrine emergent wetlands, and old field) is present within Project area. However, no impacts are anticipated due to lack of known occurrences within one mile of the Project area and because of the overall rarity of this species within Monroe County.	No comments received.
Mammals									

Common Name	Scientific Name	State Listing[1]	Known to Occur in Monroe County?[2]	Known to Occur in Noble County?[2]	Known Within One Mile of Project Area?[3]	Habitat Preference	Habitat Observed in Project Area?	Impact Assessment	ODNR Comments/Recommendations
Indiana Bat	*Myotis sodalis*	E	Yes	Yes	Yes	The Indiana bat is likely distributed over the entire State of Ohio, though not uniformly. This species generally forages in openings and edge habitats within upland and floodplain forest, but they also forage over old fields and pastures (Brack et al. 2010). Natural roost structures include trees (live or dead) with exfoliating bark, and exposure to solar radiation. Other important factors for roost trees include relative location to other trees, a permanent water source and foraging areas; Dead trees are preferred as maternity roosts; however, live trees are often used as secondary roosts depending on microclimate conditions (USFWS 2007; USFWS 2017b). Roosts have also occasionally been found to consist of cracks and hollows in trees, utility poles, buildings, and bat boxes. Primarily use caves for hibernacula, although are also known to hibernate in abandoned underground mines (Brack et al. 2010).	No	No potential roost trees or hibernacula were observed in the Project area. AEP intends to avoid areas with summer roost habitat to the extent possible. AEP will determine if any summer tree clearing is necessary in areas containing suitable roost habitat and will proceed accordingly.	The project is within the vicinity of one or more confirmed records for the Indiana bat. If suitable habitat is present and trees must be cut, the ODNR recommends that tree clearing only occur between October 1 and March 31. If no tree removal is proposed, this project is not likely to impact this species.
Black Bear	*Ursus americanus*	E	Yes	Yes	No	Wide variety of heavily wooded habitats, ranging from swamps and wetlands to dry upland hardwood and coniferous forests. Although they will utilize open areas, bears prefer wooded cover with a dense understory (NatureServe 2017).	Yes	Suitable foraging habitat is present within the Project area. However, due to the mobility of the species, no impacts are anticipated.	Due to the mobility of this species, the Project is not likely to impact this species.

[1]E=Endangered; T=Threatened
[2]According to Ohio Department of Natural Resources, State Listed Wildlife Species by County (ODNR 2017a).
[3]According to Ohio Natural Heritage Program (Appendix B).

Table 5. Summary of Potential Federally-Listed Species within the Summerfield-Berne 138 kV Transmission Line Rebuild Project Area, Monroe and Noble Counties, Ohio

Common Name	Scientific Name	Federal Listing[1]	Known to Occur in Monroe County?[2]	Known to Occur in Noble County?[2]	Habitat Preference	Habitat Observed in Project Area?	Impact Assessment	USFWS Comments/ Recommendations
Mammals								
Indiana Bat	*Myotis sodalis*	E	Yes	Yes	The Indiana bat is likely distributed over the entire State of Ohio, though not uniformly. This species generally forages in openings and edge habitats within upland and floodplain forest, but they also forage over old fields and pastures (Brack et al. 2010). Natural roost structures include trees (live or dead) with exfoliating bark, and exposure to solar radiation. Other important factors for roost trees include relative location to other trees, a permanent water source and foraging areas; Dead trees are preferred as maternity roosts; however, live trees are often used as secondary roosts depending on microclimate conditions (USFWS 2007; USFWS 2017b). Roosts have also occasionally been found to consist of cracks and hollows in trees, utility poles, buildings, and bat boxes. Primarily use caves for hibernacula, although are also known to hibernate in abandoned underground mines (Brack et al. 2010).	No	No potential roost trees or hibernacula were observed in the Project area. AEP intends to avoid areas with summer roost habitat to the extent possible. AEP will determine if any summer tree clearing is necessary in areas containing suitable roost habitat and will proceed accordingly.	The project is located in the vicinity of one or more confirmed records of Indiana bats. Therefore, the USFWS recommends that trees ≥ 3 inches dbh be saved wherever possible. Because this project will result in a small amount of forest clearing relative to the available habitat in the immediately surrounding area, habitat removal is unlikely to result in significant impacts to this species. If no caves or abandoned mines are present and tree removal is unavoidable, seasonal tree cutting (clearing of trees ≥3 inches diameter at breast height between October 1 and March 31) is recommended. Following this seasonal tree clearing recommendation should ensure that any effects to the Indiana bat are insignificant or discountable.
Northern Long-eared Bat	*Myotis septentrionalis*	T	Yes	Yes	The northern long-eared bat is found throughout Ohio. This species generally forages in forested habitat and openings in forested habitat and utilizes cracks, cavities, and loose bark within live and dead trees, as well as buildings as roosting habitat (Brack et al. 2010; USFWS 2016). The species utilizes caves and abandoned mines as winter hibernacula. Various sized caves are used providing they have a constant temperature, high humidity, and little to no air current (Brack et al. 2010).	No	No potential roost trees or hibernacula were observed within the Project area. AEP intends to avoid areas with summer roost habitat to the extent possible. AEP will determine if any summer tree clearing is necessary in areas containing suitable roost habitat and will proceed accordingly.	Should the project site contain trees ≥3 inches dbh, USFWS recommends trees be saved whenever possible. If any caves or abandoned mines may be disturbed, further coordination is requested. If no caves or abandoned mines are present and trees ≥3 inches dbh cannot be avoided, USFWS recommends that removal of trees ≥3 inches dbh only occur between October 1 and March 31 to avoid adverse effects to this species. Incidental take of northern long-eared bats from most tree clearing is exempted by a 4(d) rule.

[1]E=Endangered; T=Threatened
[2]According to USFWS (2017a).

4.0 Conclusions and Recommendations

Stantec conducted a wetland and waterbodies delineation and a preliminary habitat assessment for threatened and endangered species within the Project area on June 15 through 16, 2017, and July 20 through 21, 2017. During the field surveys, five palustrine emergent (PEM) wetlands totaling approximately 0.84 acres and one palustrine forested (PFO) wetland totaling approximately 0.35 acres were identified within the Project area. Nine ephemeral streams totaling approximately 931 linear feet in length, two intermittent streams totaling approximately 267 linear feet in length, and four perennial streams totaling approximately 765 linear feet in length were also delineated within the Project area. See Table 2 for more information regarding the wetland classification and ORAM category regarding wetlands identified within the Project area and Table 3 for more information regarding the streams identified within the Project area. The information provided by Stantec regarding wetland and stream boundaries is based on an analysis of the wetland and upland conditions present within the Project area at the time of the field work. The delineations were performed by experienced and qualified professionals using regulatory agency-accepted practices and sound professional judgment.

The ODNR Ohio Natural Heritage Program (Appendix B) stated that the Project is not located within one mile of any known locations of state-listed threatened or endangered species. The ODNR Ohio Natural Heritage Program had one record of an Oak-Maple-Tuliptree Forest Plant Community within the vicinity of the Project area. Other than this site, the ODNR is unaware of any unique ecological sites, geological features, animal assemblages, scenic rivers, state wildlife areas, nature preserves, parks or forests, national wildlife refuges, or other protected natural areas within the Project area or a one-mile radius of it.

The response received from the ODNR Office of Real Estate (Appendix B) indicated that the Project is within the range of the following state-listed threatened and endangered species of fish: channel darter, river darter, Tippecanoe darter, and Ohio lamprey. The ODNR recommended that no in-water work take place in perennial streams from April 15 to June 30, in order to reduce impacts to indigenous aquatic species and their habitat. If no in-water work is proposed in a perennial stream, the ODNR stated that this Project is not likely to impact these or other aquatic species.

The ODNR also stated that the Project is within the range of the northern harrier, a state endangered bird. ODNR stated that if potential nesting/hunting habitat will be impacted, construction should be avoided in these areas between May 15 and August 1. According to the ODNR, if this type of habitat will not be impacted, the Project is not likely to impact this species. The Project area does not contain typical hunting or nesting habitat for the northern harrier.

ODNR also stated that the Project is within the range of the eastern hellbender. However, the ODNR stated that due to the location, and that there is no in-water work proposed in a perennial stream of sufficient size to provide suitable habitat, this Project is not likely to impact this species.

Additionally, the ODNR stated that the Project is within the range of the black bear, but that the Project is not likely to impact that species due to its mobility. Finally, the ODNR stated that the Project is within the range of the Indiana bat and within the vicinity of one or more records of the Indiana bat. They stated that if suitable Indiana bat habitat is present and trees must be cut, the ODNR recommends that tree clearing only occur between October 1 and March 31.

Though no potential hibernacula or potentially suitable roost trees for for the Indiana or northern long-eared bat were identified within the Project area, it is located in the vicinity of one or more confirmed records of Indiana bats according to the U.S. Fish and Wildlife Service (USFWS) (Appendix B). Therefore, the USFWS recommends that trees ≥ 3 inches diameter breast height (dbh) be saved wherever possible. Because the Project will result in a small amount of forest clearing relative to the available habitat in the immediately surrounding area, habitat removal is unlikely to result in significant impacts to these species. Because Indiana bat presence in the vicinity of the Project has been confirmed, clearing of trees ≥ 3 inches dbh during the summer roosting season may result in direct take of individuals. If no caves or abandoned mines are present and tree removal is unavoidable, USFWS recommends that removal of any trees ≥ 3 inches dbh only occur between October 1 and March 31. Following this seasonal tree clearing recommendation should ensure that any effects to Indiana bats and northern long-eared bats are insignificant or discountable. According to the USFWS (Appendix B), because Indiana bat presence has already been confirmed in the project vicinity, any additional summer surveys would not constitute presence/absence surveys for this species. In addition, the USFWS stated that due to the project type, size, and location, they do not anticipate adverse effects to any other federally endangered, threatened, proposed, or candidate species.

5.0 References

Brack, Virgil Jr., Dale W. Sparks, John O. Whitaker Jr., Brianne L. Walters, and Angela Boyer. 2010. Bats of Ohio. Indiana State University Center for North American Bat Research and Conservation.

Butterflies and Moths of North America. 2016. Regal Fritillary. Available at http://www.butterfliesandmoths.org/species/Speyeria-idalia. Accessed on 29 February 2016.

Cornell Lab of Ornithology. 2016. All About Birds: Northern Harrier – *Circus cyaneus*. Available online at https://www.allaboutbirds.org/guide/Northern_Harrier/lifehistory. Accessed June 15, 2017.

Cowardin, L.M., V. Carter V., F.C. Golet, E.T. LaRoe. 1979. Classification of Wetlands and Deepwater Habitats of the United States. U.S. Fish and Wildlife Service Report No. FWS/OBS/-79/31.Washington, D.C.

Mack, J.J. 2001. Ohio Rapid Assessment Method for Wetlands, Manual for Using Version 5.0. Ohio EPA Technical Bulletin Wetland/2001-1-1. Ohio Environmental Protection Agency, Division of Surface Water, 401 Wetland Ecology Unit, Columbus, Ohio.

NatureServe. 2017. NatureServe Explorer: An online encyclopedia of life [web application]. Version 7.0. NatureServe, Arlington, VA. U.S.A. Available http://explorer.natureserve.org. Accessed June 14, 2017.

Ohio Department of Natural Resources (ODNR) Division of Wildlife. 2017a. State Listed Wildlife Species by County. Available at http://wildlife.ohiodnr.gov/species-and-habitats/state-listed-species/state-listed-species-by-county. Accessed June 14, 2017.

ODNR Division of Wildlife. 2017b. Species Guide Index. Available at http://wildlife.ohiodnr.gov/species-and-habitats/species-guide-index/. Accessed June 14, 2017.

Ohio Environmental Protection Agency (OEPA). 2006. Methods for Assessing Habitat in Flowing Waters: Using the Qualitative Habitat Evaluation Index (QHEI).

OEPA. 2012. Field Evaluation Manual for Ohio's Primary Headwater Habitat Streams, Version 3.0. Ohio EPA Division of Surface Water, Columbus, Ohio. 117 pp.

U.S. Army Corps of Engineers (USACE), Environmental Laboratory. 1987. Corps of Engineers Wetlands Delineation Manual, Technical Report Y-87-1, U.S. Army Engineer Waterway Experiment Station, Vicksburg, Mississippi.

USACE. 2002. Issuance of Nationwide Permits; Notice, 67 Fed. Reg. 10. January 15, 2002. Federal Register: The Daily Journal of the United States. Available at https://www.gpo.gov/fdsys/pkg/FR-2002-01-15/pdf/02-539.pdf.

USACE. 2005. *Guidance on Ordinary High Water Mark Identification* (Regulatory Guidance Letter, No. 05-05). Available online at http://www.usace.army.mil/Portals/2/docs/civilworks/RGLS/rgl05-05.pdf. Accessed June 14, 2017.

USACE. 2012. Regional Supplement to the Corps of Engineers Wetland Delineation Manual: Eastern Mountains and Piedmont Region (Version 2.0), ed. J.F. Berkowitz, J.S. Wakely R.W. Lichvar, C.V. Noble. ERDC/EL TR-12-9. Vicksburg, MS: U.S. Army Engineer Research and Development Center.

USFWS. 2007. Indiana bat (*Myotis sodalis*) draft recovery plan: First revision. U.S. Fish and Wildlife Service, Ft. Snelling, Minnesota. 258 pp.

USFWS. 2016. Environmental Conservation Online System (ECOS): Species Profile for Northern Long-eared Bat (*Myotis septentrionalis*). Available online at https://ecos.fws.gov/tess_public/profile/speciesProfile?spcode=A0JE. Accessed June 14, 2017.

USFWS. 2017a. Federally Listed Species by Ohio Counties. Available at https://www.fws.gov/midwest/ohio/pdf/OhioTEListByCountyOct2015.pdf. Accessed May 1, 2017.

USFWS. 2017b. 2017 Range-wide Indiana Bat Summer Survey Guidelines, May 2017. Available at https://www.fws.gov/midwest/endangered/mammals/inba/inbasummersurveyguidance.html. Accessed June 14, 2017.

Appendix A Figures

A.1 FIGURE 1 – PROJECT LOCATION MAP

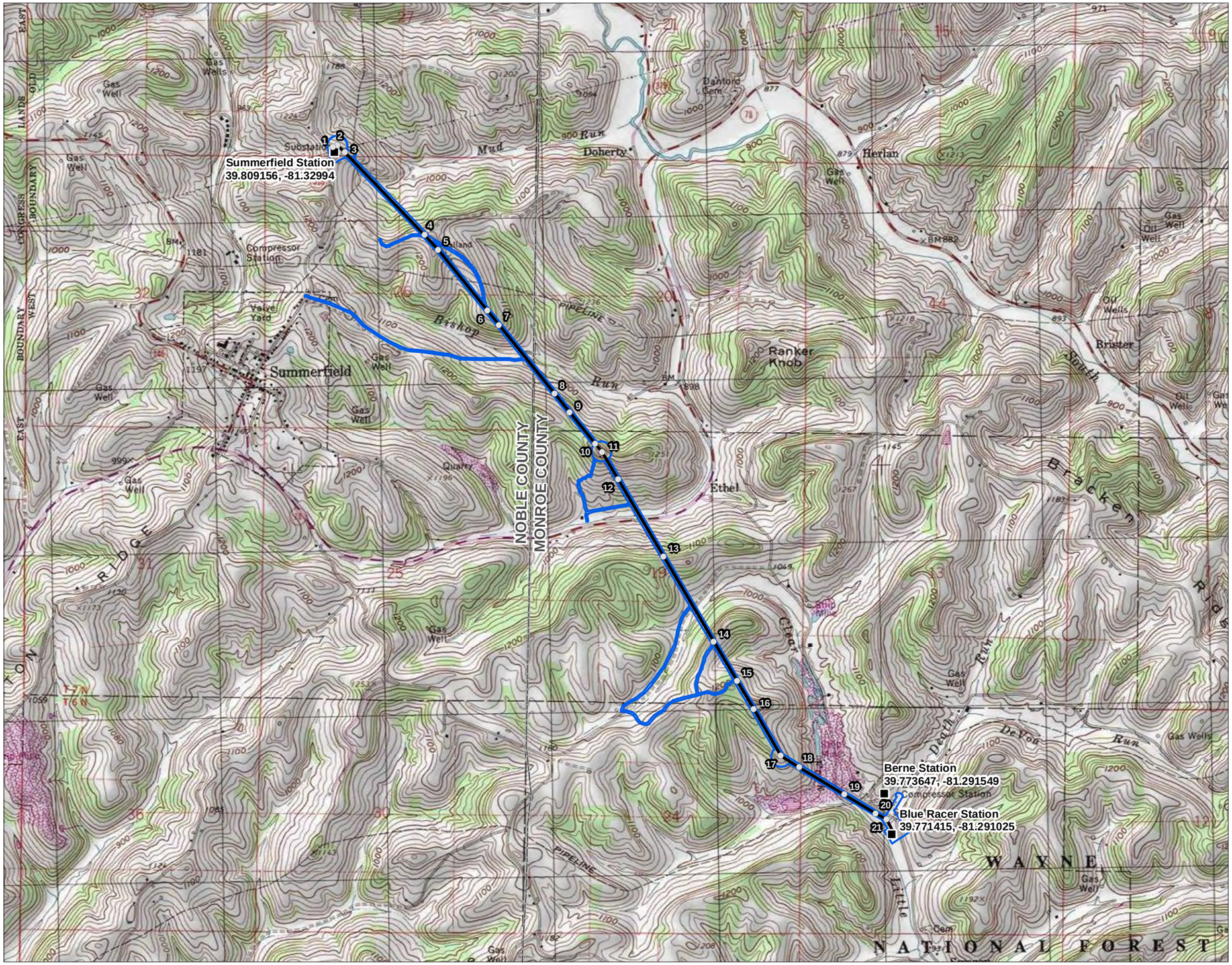

Figure No.
1

Title
Project Location Map

Client/Project
AEP Ohio Transmission Company, Inc.
Summerfield-Berne 138 kV Transmission Line
Rebuild Project

Project Location
Monroe and Noble
Counties, Ohio

193704906
Prepared by JLH on 2017-12-21
Technical Review by AK on 2017-12-21
Independent Review by DJG on 2017-12-21

0 1,000 2,000 Feet
1:24,000 (At original document size of 11x17)

N

Legend

- Substation
- Structure to be Replaced
- Summerfield-Berne 138 kV Transmission Line
- Project Area

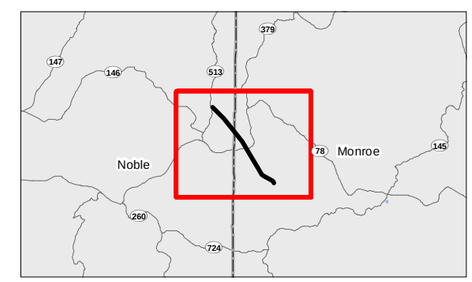

Notes
1. Coordinate System: NAD 1983 StatePlane Ohio South FIPS 3402 Feet
2. Data Sources Include: Stantec, AEP
3. Background: USGS 7.5' Topographic Quadrangle: Summerfield (OH), 1978.

Stantec

Disclaimer: Stantec assumes no responsibility for data supplied in electronic format. The recipient accepts full responsibility for verifying the accuracy and completeness of the data. The recipient releases Stantec, its officers, employees, consultants and agents, from any and all claims arising in any way from the content or provision of the data.

V:\1193\Active\193704906\03_data\gis_cad\shp\mxd\secs\fnurestlp1_ecs_topo_193704906.mxd Revised: 2017-12-21 By: JHIEDEMAN

A.2 FIGURE 2 – WETLAND AND WATERBODY DELINEATION MAP

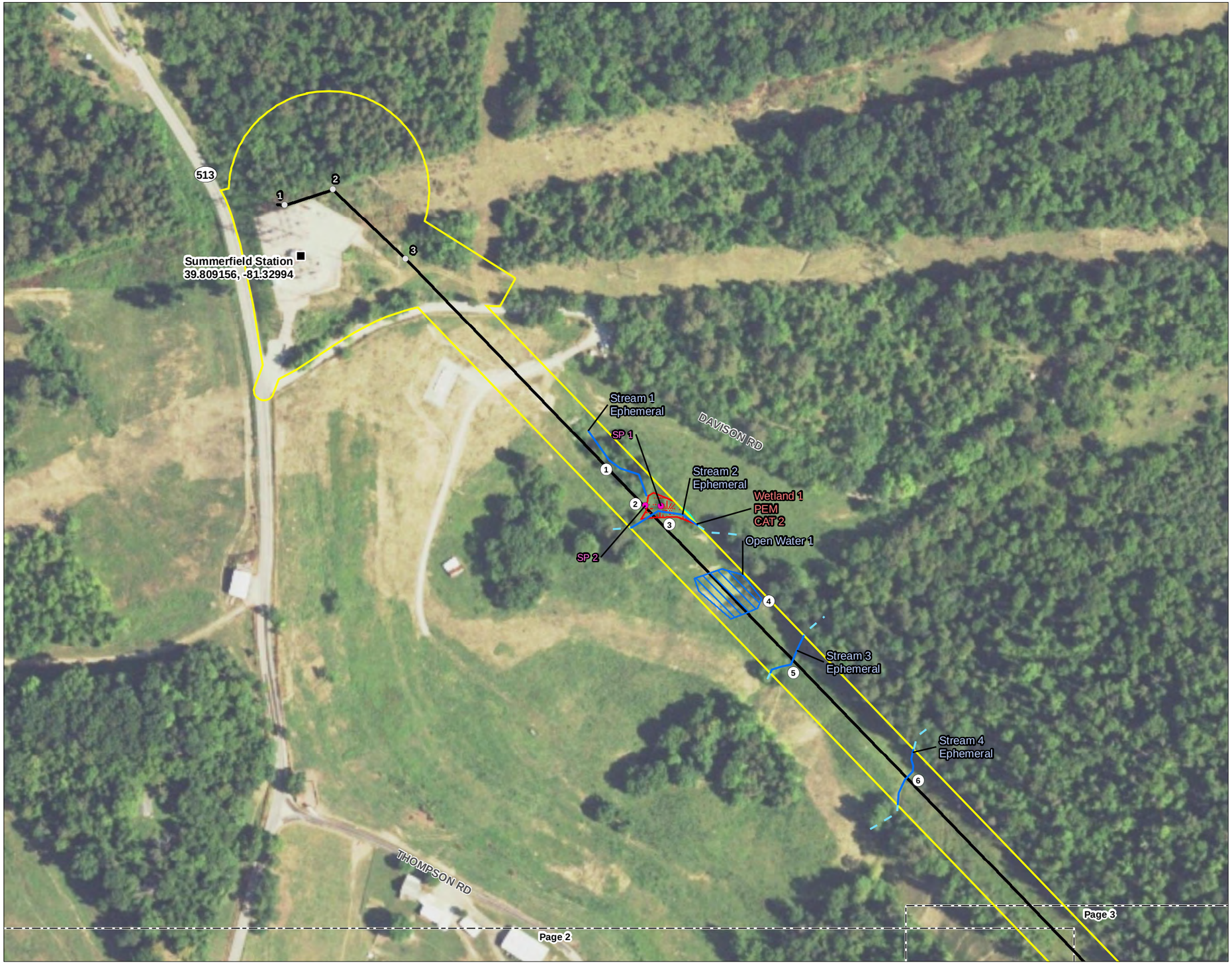

Figure No.
2

Title
Wetland and Waterbody Delineation Map

Client/Project
AEP Ohio Transmission Company, Inc.
Summerfield-Berne 138 kV Transmission Line
Rebuild Project

Project Location
Monroe and Noble
Counties, Ohio

193704906
Prepared by JLH on 2017-12-21
Technical Review by AK on 2017-12-21
Independent Review by DJG on 2017-12-21

0 100 200 Feet
1:2,400 (At original document size of 11x17)

N

Legend

- Substation
- Structure to be Replaced
- Summerfield-Berne 138 kV Transmission Line
- Project Area
- Existing Culvert
- Wetland Determination Sample Point
- Photo Location
- Upland Drainage Feature
- Approximate Upland Drainage Feature
- Field Delineated Waterway
- Approximate Waterway
- Field Delineated Open Water
- Approximate Open Water
- Field Delineated Emergent Wetland
- Field Delineated Forested Wetland
- Approximate Wetland

FEMA Flood Hazard Area
- 100-year Flood Zone
- 100-year Floodway

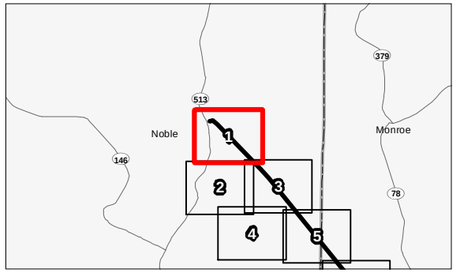

Notes
1. Coordinate System: NAD 1983 StatePlane Ohio South FIPS 3402 Feet
2. Data Sources Include: Stantec, AEP, NADS, FEMA, OGRIP
3. Orthophotography: 2015 NAIP

Stantec

Disclaimer: Stantec assumes no responsibility for data supplied in electronic format. The recipient accepts full responsibility for verifying the accuracy and completeness of the data. The recipient releases Stantec, its officers, employees, consultants and agents, from any and all claims arising in any way from the content or provision of the data.

\\ 193704906\01\ data\ gis\ cad\ shp\ eco_lines\fig2_eco_envfeats_193704906.mxd Revised: 2017-12-21 By: JHE/DEMAN

Figure No.
2

Title
Wetland and Waterbody Delineation Map

Client/Project
AEP Ohio Transmission Company, Inc.
Summerfield-Berne 138 kV Transmission Line
Rebuild Project

Project Location
Monroe and Noble
Counties, Ohio

193704906
Prepared by JLH on 2017-12-21
Technical Review by AK on 2017-12-21
Independent Review by DJG on 2017-12-21

0 100 200 Feet
1:2,400 (At original document size of 11x17)

N

Legend

- Substation
- Structure to be Replaced
- Summerfield-Berne 138 kV Transmission Line
- Project Area
- Existing Culvert
- Wetland Determination Sample Point
- Photo Location
- Upland Drainage Feature
- Approximate Upland Drainage Feature
- Field Delineated Waterway
- Approximate Waterway
- Field Delineated Open Water
- Approximate Open Water
- Field Delineated Emergent Wetland
- Field Delineated Forested Wetland
- Approximate Wetland

FEMA Flood Hazard Area
- 100-year Flood Zone
- 100-year Floodway

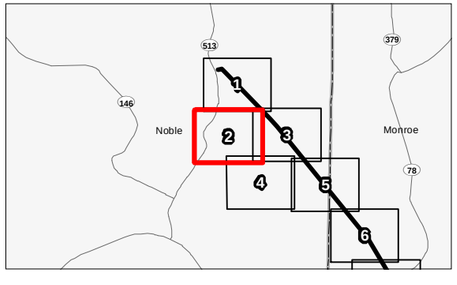

Notes
1. Coordinate System: NAD 1983 StatePlane Ohio South FIPS 3402 Feet
2. Data Sources Include: Stantec, AEP, NADS, FEMA, OGRIP
3. Orthophotography: 2015 NAIP

Stantec

Disclaimer: Stantec assumes no responsibility for data supplied in electronic format. The recipient accepts full responsibility for verifying the accuracy and completeness of the data. The recipient releases Stantec, its officers, employees, consultants and agents, from any and all claims arising in any way from the content or provision of the data.

V:\1937\Active\193704906\03_data\gis_cad\mxd\eco_figures\fig2_eco_envfeats_193704906.mxd Revised: 2017-12-21 By: JHERZMAN

Figure No.
2

Title
Wetland and Waterbody Delineation Map

Client/Project
AEP Ohio Transmission Company, Inc.
Summerfield-Berne 138 kV Transmission Line
Rebuild Project

Project Location
Monroe and Noble
Counties, Ohio

193704906
Prepared by JLH on 2017-12-21
Technical Review by AK on 2017-12-21
Independent Review by DJG on 2017-12-21

0 100 200 Feet
1:2,400 (At original document size of 11x17)

N

Legend

- Substation
- Structure to be Replaced
- Summerfield-Berne 138 kV Transmission Line
- Project Area
- Existing Culvert
- Wetland Determination Sample Point
- Photo Location
- Upland Drainage Feature
- Approximate Upland Drainage Feature
- Field Delineated Waterway
- Approximate Waterway
- Field Delineated Open Water
- Approximate Open Water
- Field Delineated Emergent Wetland
- Field Delineated Forested Wetland
- Approximate Wetland

FEMA Flood Hazard Area
- 100-year Flood Zone
- 100-year Floodway

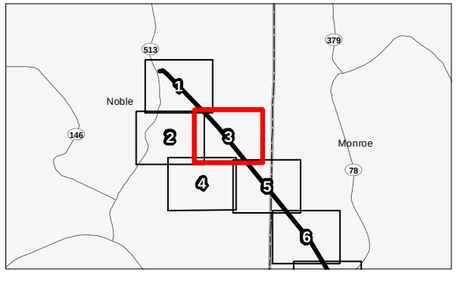

Notes
1. Coordinate System: NAD 1983 StatePlane Ohio South FIPS 3402 Feet
2. Data Sources Include: Stantec, AEP, NADS, FEMA, OGRIP
3. Orthophotography: 2015 NAIP

Stantec

Disclaimer: Stantec assumes no responsibility for data supplied in electronic format. The recipient accepts full responsibility for verifying the accuracy and completeness of the data. The recipient releases Stantec, its officers, employees, consultants and agents, from any and all claims arising in any way from the content or provision of the data.

V:\193704906\03_data\gis\mxds\eco_figures\fig2_eco_envfeats_193704906.mxd Revised: 2017-12-21 By: JHUDEMAN

Figure No.
2

Title
Wetland and Waterbody Delineation Map

Client/Project
AEP Ohio Transmission Company, Inc.
Summerfield-Berne 138 kV Transmission Line
Rebuild Project

Project Location
Monroe and Noble
Counties, Ohio

193704906
Prepared by JLH on 2017-12-21
Technical Review by AK on 2017-12-21
Independent Review by DJG on 2017-12-21

0 100 200 Feet
1:2,400 (At original document size of 11x17)

N

Legend

- Substation
- Structure to be Replaced
- Summerfield-Berne 138 kV Transmission Line
- Project Area
- Existing Culvert
- Wetland Determination Sample Point
- Photo Location
- Upland Drainage Feature
- Approximate Upland Drainage Feature
- Field Delineated Waterway
- Approximate Waterway
- Field Delineated Open Water
- Approximate Open Water
- Field Delineated Emergent Wetland
- Field Delineated Forested Wetland
- Approximate Wetland

FEMA Flood Hazard Area
- 100-year Flood Zone
- 100-year Floodway

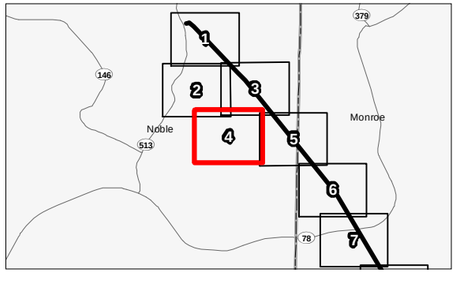

Notes
1. Coordinate System: NAD 1983 StatePlane Ohio South FIPS 3402 Feet
2. Data Sources Include: Stantec, AEP, NADS, FEMA, OGRIP
3. Orthophotography: 2015 NAIP

Stantec

Disclaimer: Stantec assumes no responsibility for data supplied in electronic format. The recipient accepts full responsibility for verifying the accuracy and completeness of the data. The recipient releases Stantec, its officers, employees, consultants and agents, from any and all claims arising in any way from the content or provision of the data.

V:\1937\active\193704906\03_data\gis\mxds\ecp_figures\fig2.aprx, envfeats 193704906.mxd Revised: 2017-12-21 By: JHEIDEMAN

This foregoing document was electronically filed with the Public Utilities

Commission of Ohio Docketing Information System on

1/5/2018 10:09:11 AM

in

Case No(s). 17-2505-EL-BLN

Summary: Letter of Notification electronically filed by Ms. Christen M. Blend on behalf of AEP Ohio Transmission Power Company, Inc.