LARGE FILING SEPARATOR SHEET

CASE NUMBER 13-202-RR FED

FILE DATE JAN 14 2013

SECTION: 172

NUMBER OF PAGES: 226

DESCRIPTION OF DOCUMENT:

Application

NC FILE

Public Utilities Commission of Ohio

13-0202-RR-FED

Memo

To: Docketing Division

From: George Martin, Grade Crossing Planner, Rail Division

Re: In the matter of the authorization of a Norfolk Southern Railway Corridor Project in the City of Miamisburg, Montgomery County

Date: January 14, 2013

The Ohio Rail Development Commission (ORDC) has authorized funding for Norfolk Southern Railway (NS) to upgrade a total of eight (8) grade crossings within the City of Miamisburg, Montgomery County. These crossings were surveyed on September 23, 2011, and were found to warrant upgrades. One of these crossings, Kercher Street, DOT# 524650E, was previously included in Case No. 07-1169-RR-FED. Due to engineering issues which resulted in this corridor project, Kercher Street is now part of this case.

The following grade crossings will be upgraded as follows:

Richard Street, DOT# 524659, flashing lights and roadway gates
Kercher Street, DOT# 524650E, flashing lights and roadway gates
E Pearl Street, DOT# 524651L, circuitry upgrade and modernization
E Maple Street, DOT# 524653A, circuitry upgrade and modernization
Central Avenue/SR 725, DOT# 524654G, circuitry upgrade and modernization
Linden Avenue, DOT# 524657C, circuitry upgrade and modernization
Lock Street, DOT# 524658J, flashing lights and roadway gates
Mound Avenue, DOT# 524659R, circuitry upgrade and modernization

The project will be paid for with federal funds, and are actual cost. The plans and estimates for this corridor project have been submitted and approved. **Due to the complexity of the project and the number of crossings which need to be placed into service at the same time, staff requests a 15-month order.** Construction may commence at once. Staff requests that the following language be incorporated in the Entry:

It is expected that all work necessary for FHWA acceptance of the warning devices will be completed by the in-service due date and that the railroad will be responsible for this work. This work includes, but is not limited to:
Any ancillary work to make the warning devices function as designed and visible to the roadway user, and
MUTCD compliance, including minor roadway work if necessary.

A suggested case coding and heading would be:

This is to certify that the images appearing are an accurate and complete reproduction of a case file document delivered in the regular course of business
Technician Sm Date Processed JAN 14 2013

RECEIVED-DOCKETING DIV
2013 JAN 14 PM 1:00
PUCO

PUCO Case No. 13- -RR-FED In the matter of the authorization of Norfolk Southern Railway Corridor Project in the City of Miamisburg, Montgomery County

C: Legal Department

Please serve the following parties of record.

Ms Cathy Stout

Ohio Rail Development Commission

1980 W Broad St, Mailstop # 3140

Columbus, Oh 43223

Ms Cayela Wimberly

Norfolk Southern Railway

1200 Peachtree St, Box 123

Atlanta, Ga 30309

Mayor Richard C Church, Jr

Miamisburg Civic Center

10 North First St

Miamisburg, Oh 45342

Mr Keith Johnson

City Manager

10 North First

Miamisburg, Oh 45342

Dayton Power & Light

OHIO RAIL DEVELOPMENT COMMISSION
INTER-OFFICE COMMUNICATION

TO: **George Martin, Rail Division, PUCO**

FROM: **Cathy Stout, Manager, Safety Section, ORDC**

BY: **Tim Perkins, Project Manager**

SUBJECT: **City of Miamisburg, Montgomery County, Corridor, NS, PID No. 92869**
Richard St., DOT No. 524 649 K, Mile Post: CJ 217.5, S&E Project No. 10.1376
Lock St., DOT No. 524 658 J, Mile Post: CJ 218.5, S&E Project No. 10.1383
Kercher St., DOT No. 524 650 E, Mile Post: CJ 217.7, S&E Project No. 10.1377
Maple St., DOT No. 524 653 A, Mile Post: CJ 218.1, S&E Project No. 10.1380
Linden Ave., DOT No. 524 657 C, Mile Post: CJ 218.3, S&E Project No. 10.1382
S.R. 725-11.58, Central Ave., DOT No. 524 654 G, Mile Post: CJ 218.2, S&E Project No. 10.1381
E. Pearl St., DOT No. 524 651 L, Mile Post: CJ 217.9, S&E Project No. 10.1378
Mound Ave., DOT No. 524 659 R, Mile Post: CJ 218.6, S&E Project No. 10.1384

DATE: **January 11, 2013**

A diagnostic survey of this Corridor was conducted on September 23, 2011. The Ohio Rail Development Commission (ORDC) and the Public Utilities Commission (PUCO) attended the reviews. The Diagnostic Team recommended the improvements of warning devices at each location to flashing lights and roadway gates. Copies of the diagnostic review form and the plan and estimate are attached for each location.

PE has already been provided by the railroad. ORDC approves the site plans and estimates as provided. Please issue a construction-only order for fifteen (15) months for the projects outlined above. This construction authorization is made with the stipulation and understanding that any field work needs prior approval before the work begins. This authorization is made with the stipulation and understanding that an approved estimate may contain entries for items or activities that may be cited and found to be ineligible for federal participation during the project audit.

It is expected that all work necessary for FHWA acceptance of the warning devices will be completed by the in-service due date and that the railroad will be responsible for this work. This work includes, but is not limited to:

- any ancillary work to make warning devices function as designed and visible to the roadway user, and
- MUTCD compliance – including minor roadway work if necessary.

Thank you for your assistance with these matters.

Attachment: Diagnostic Review
Plan & Estimate

OHIO RAIL DEVELOPMENT COMMISSION

1980 WEST BROAD STREET • COLUMBUS, OH 43223
JOHN R. KASICH, GOVERNOR • JAMES G. BRADLEY, ORDC CHAIRMAN

March 30, 2012

Ms. Cayela J. Wimberly
Norfolk Southern Railway
Public Projects Engineer
1200 Peachtree Street, Box 123
Atlanta, Ga. 30309

Subject: Grade Crossing Warning Device Improvements, CJ Corridor
Montgomery County, City of Miamisburg, PID 92869

- Richard Street, DOT# 524 649K, 10.1376
  Upgrade to Flashing Light Signals and Roadway Gates
- Kercher Street, DOT# 524 650E, 10.1377
  Upgrade to Flashing Light Signals and Roadway Gates
- E. Pearl Street, DOT# 524 651 L, 10.1378
  Circuitry Upgrade and Modernization
- E. Maple Street, DOT# 524 653A, 10.1380
  Circuitry Upgrade and Modernization
- Central Avenue, SR 725-11.58, DOT# 524 654G, 10.1381
  Circuitry Upgrade and Modernization
- Linden Avenue, DOT# 524 657C, 10.1382
  Circuitry Upgrade and Modernization
- Lock Street, DOT# 524 658J, 10.1383
  Upgrade to Flashing Light Signals and Roadway Gates
- Mound Avenue, DOT# 524 659R, 10.1384
  Circuitry Upgrade and Modernization

Cayela

Dear Ms. Wimberly:

The above grade crossings were identified for improvements in the CJ Corridor Agreement, Agreement number 13595, dated October 13, 2005, and letter agreement dated March 19, 2012.

Norfolk Southern Corporation (NS) is authorized to proceed with the site plans and cost estimates (PE) for this project. Site plans have been submitted previously for all locations above except Lock Street. These plans are acceptable however they should be reviewed to ensure they meet current needs and revised/updated estimates submitted. Lock Street will require plans as well as estimates. Please note that existing equipment should be incorporated into the modernization of the warning devices unless it does not support the improved circuitry and/or meet current engineering standards. This authorization is made with the stipulation and understanding that any field work needs prior approval before work begins. This authorization is made with the stipulation and understanding that an approved estimate may contain entries for items or activities that may be cited and found to be ineligible for federal participation during the project audit.

The ORDC is not requesting that the PUCO issue an Order at this time. When the ORDC receives the PE it will be evaluated and a construction-only Order requested from PUCO. Please submit the PE to ORDC within 90 days of receipt of this letter.

The diagnostic review forms are attached. Please note any recommendations (page 3), if any, made by the team with regard to requirements for this location. Any minor roadway work necessary for MUTCD compliance should be incorporated into the PE and such costs will flow through the railroad reimbursement process.

Please note in your design process that in accordance with a separate agreement grade crossings in the vicinity, Buckeye Street, DOT# 524652T and Park Street, 524655N, are scheduled to be closed within approximately 120 days. Construction will not be authorized prior to the closure taking effect to ensure that no conflict between the existing circuitry and the subject improvements occurs.

The Project Manager for this project is Tim Perkins. Tim can be reached at (614) 580-7749, or tim.perkins@dot.state.oh.us, if you have any questions.

Sincerely,

Susan Kirkland

Susan J. Kirkland
Manager, Safety Programs

C: D. Casey Talbot, Attorney at Law, Eastman & Smith, Ltd.
Leah Thomas-Dalton, Rail Division Chief, PUCO
George Martin, PUCO, Grade Crossing Planner
Project Manager, ORDC

Ohio Rail Development Commission
1980 W. Broad Street, 2nd Floor
Columbus, OH 43223

Diagnostic Review Team Survey

Date: 9.23.11

Location Data

Street or Road Name:	Kercher St.		
Route/Road Number (i.e. Twp., Co., SR or US)		AAR-DOT No.:	524650E
County: Montgomery	Township:	City: (In or Near)	Miamisburg
Railroad Name: Norfolk Southern (NS)	Railroad Division: ~~Dearborne~~ LAKE	Branch/Line Name:	Cincinnati LI
Nearest RR Timetable Station: Oxford		RR Milepost:	217.7

On-Site Review Team

(Include: Name – Organization – Phone Number)

1. TIM PERKINS ORDC 614-644-0284
2. Matt Malich ORDC 614-387-5162
3. Derrick Duke NS 308-222-0220
4. GEORGE MARTIN NCO 614-752-9107
5. DAVE BOWLIN CITY OF MIAMISBURG 937 847-6639
6. BOB STANLEY CITY OF MIAMISBURG 937 847-6531
7.
8.
9.
10.
11.
12.
13.

Existing Traffic Control Devices

Type of Warning Devices	Installed?		Quantity/Comments
Advance Warning Signs	☑ Yes	☐ No	2
'Stop' Signs	☐ Yes	☑ No	
'Stop Ahead' Signs	☐ Yes	☑ No	
Pavement Markings	☑ Yes	☐ No	2
Crossbucks	☐ Yes	☑ No	
Number of Tracks Signs	☑ Yes	☐ No	
Inventory Tags	☑ Yes	☐ No	
Interconnected Highway Traffic Signal	☐ Yes	☑ No	
Mast-Mounted Flashing Lights	☑ Yes	☐ No	
Cantilever Flashing Lights	☐ Yes	☑ No	Number: Length:
Side Lights	☐ Yes	☑ No	
Automatic Gates	☐ Yes	☑ No	Number: Length:
Bells	☐ Yes	☑ No	

UPDATED (12/2006)

Sidewalk Gate Arms	☑ Yes ☐ No	
'No Turn' Signs	☐ Yes ☑ No	
Illumination	☑ Yes ☐ No	
Is crossing flagged by train crew?	☐ Yes ☑ No	
Other	☐ Yes ☑ No	

Safety Data (Obtain crash reports, if possible, prior to review)

	Initial Information (from database)	Revised
Number & dates of crashes in previous 5 years	1 – 12/26/2008 (2 injuries)	
Hazard Ranking	47 Date Run: 8/19/2011	

Railroad Data

Railroad Characteristics	Initial Information (from database)	Revised
Total trains per day	18	
< 1 per day		
Day thru trains	6	
Night thru trains	10	
Daytime switching movements	2	
Nighttime switching movements	0	
Total number of tracks	2	
Number of main tracks	2	
Number of other tracks	0	
Maximum train speed	45	
Typical train speed		
Amtrak		

If non-gated crossing, is clearing sight distance adequate in all quadrants? (See Table 1) ☐ Yes ☑ No

If multiple tracks, can two trains occupy crossing at the same time? ☑ Yes ☐ No

Can one train block the motorists' view of another train at crossing? ☑ Yes (Explain below) ☐ No

Are there other track(s) crossing this same roadway within 100 ft of this crossing? ☐ Yes ☑ No

If yes, Crossing DOT #(if different) _____

If yes, distance _____ (take measurement between track centerlines at closest point along roadway)

Roadway Data

Local Highway Authority: City of Miamisburg

Roadway Characteristics	Initial Information (from database)	Revised
Average daily traffic	2120	
Highway paved	☒ Yes ☐ No	☐ Yes ☐ No

Roadway Surface: ☒ Blacktop ☐ Gravel ☐ Concrete ☐ Other _____

Roadway width: 30 ft.

Number of highway lanes	2	
Urban or Rural	Urban	
Vehicle Speed: 25 MPH		

School Bus Operation: ☐ No ☑ Yes _____ Amount

Hazardous Materials Trucks: ☑ No ☐ Yes _____ Amount

Shoulders: ☑ No ☐ Yes

Is the shoulder surfaced? ☑ No ☐ Yes

Is there existing guardrail along roadway in crossing vicinity? ☑ No ☐ Yes

Is stopping site distance adequate? (See Table 2) ☑ Yes ☐ No If no, deficient approach(es) _____

Quadrant NE Curb and Gutter:	Quadrant SW Curb and Gutter:
☐ Functional (Curb height = 4" or more)	☐ Functional (Curb height = 4" or more)
☐ Non-functional (Curb height = Less than 4")	☐ Non-functional (Curb height = Less than 4")
☑ None	☑ None

Pedestrians: ☐ No ☑ Yes

Is sidewalk present? ☐ No ☑ Yes

Is there a nearby intersection that could cause queuing over the crossing? ☑ No ☐ Yes

If yes,

Distance _____

Is this intersection signalized? ☑ No ☐ Yes

Are the signals currently interconnected with the existing crossing warning devices? ☑ No ☐ Yes

Is it the consensus of the Diagnostic Review Team that this is a potential closure project: ☑ No ☐ Yes

Explain reasons:

Type of Development

☐ Open Space	☐ Institutional	Location of nearby schools:
☑ Industrial	☐ Commercial	
☑ Residential		

Utility Information

Is commercial power available? ☐ No ☑ Yes

Utility Provider (Company Name) DP&L Phone Number _____

Nearest Available Power Source _____

What other utilities are present? _____

Is there potential utility conflict(s) ☐ Yes ☐ No ☐ Unknown

Diagnostic Team Recommendations

	Quadrants Needed
☐ Install/upgrade active devices	
☐ Automatic Flashing Lights (AFLS)	
☐ AFLS /Cants	
☐ AFLS / Gates	
☐ AFLS / Gates / Cants	
☐ Upgrade circuitry	
☐ Sidelights	
☐ Guardrail Needed	
☐ Install/Replace curb	
☐ Other (define)	

Comments: Curb both quadrants and pole relocation.

☐ Install/upgrade traffic signal preemption	
☐ No improvements needed	

☐ Other (define)	

Acknowledgement of Recommendations (each entity represented at the diagnostic must have at least one signature acknowledgement):

	Dave Bowlin	
		Jim Perkins

Field Dimensions

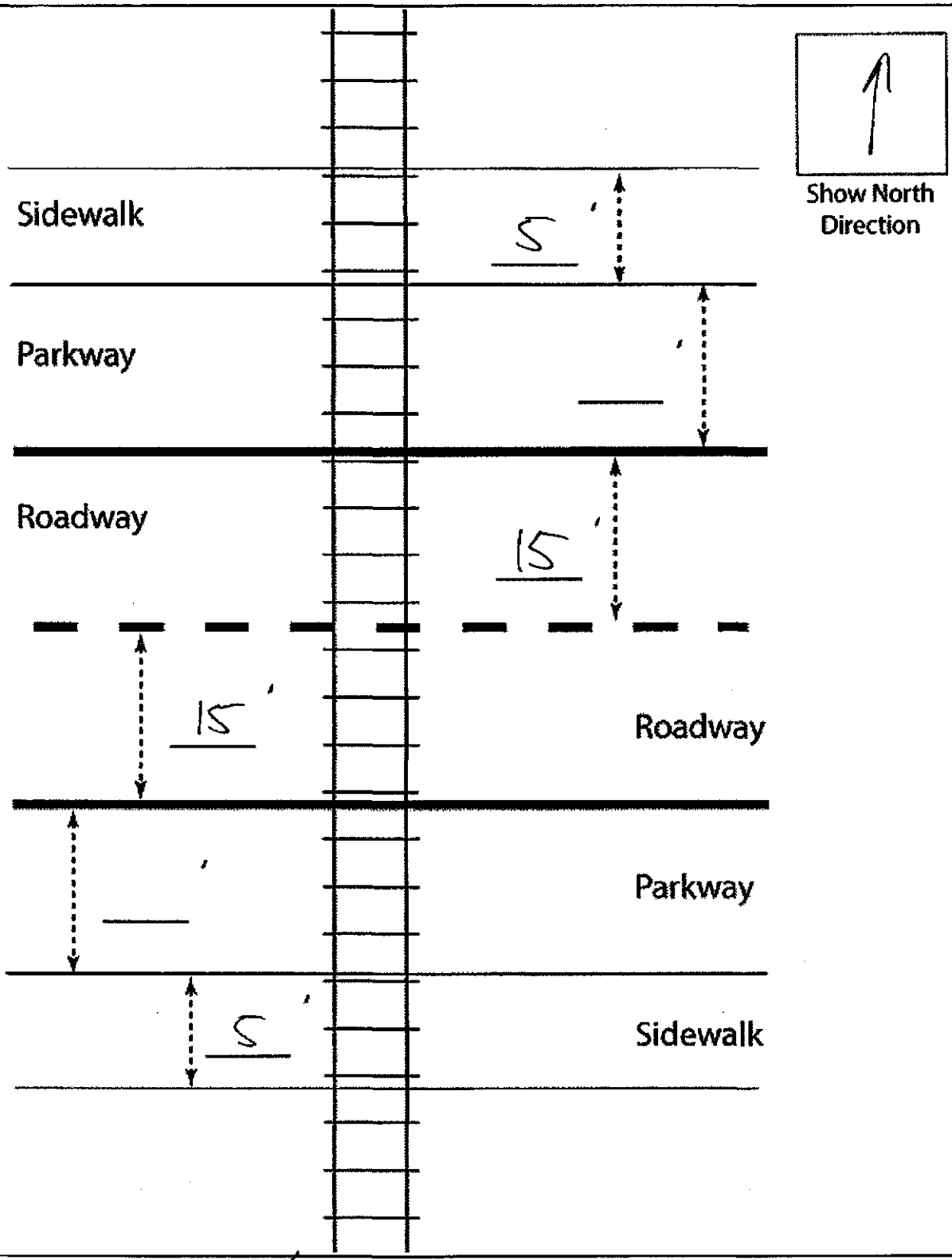

Crossing Angle ☐ 0-29° ☐ 30-59° ☑ 60-90° Measured in _____ Quadrant?

Measurements by: TP

UPDATED (12/2006)

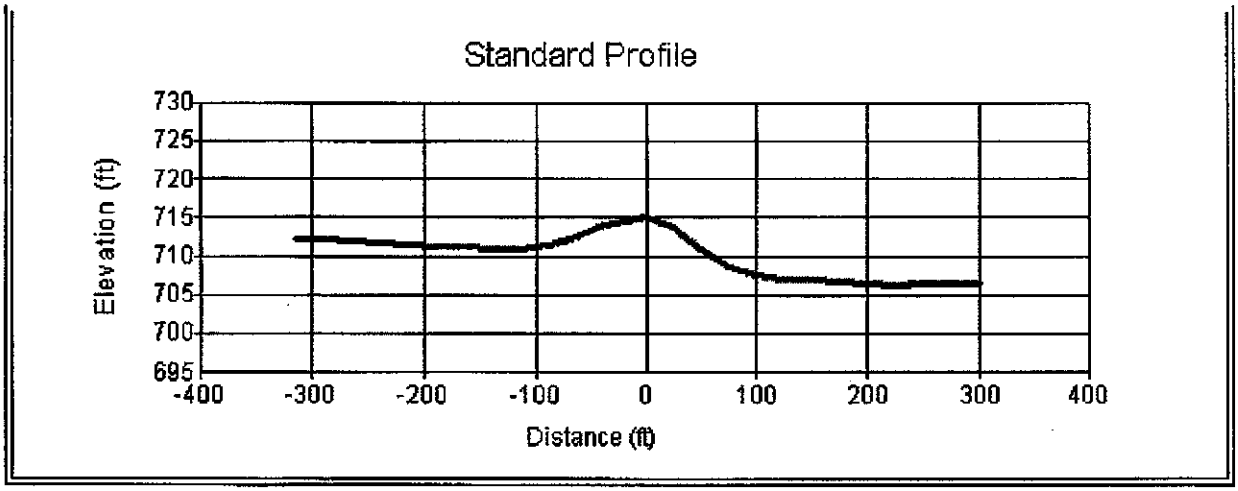

(Click on Profile to View Data)

Site Sketch

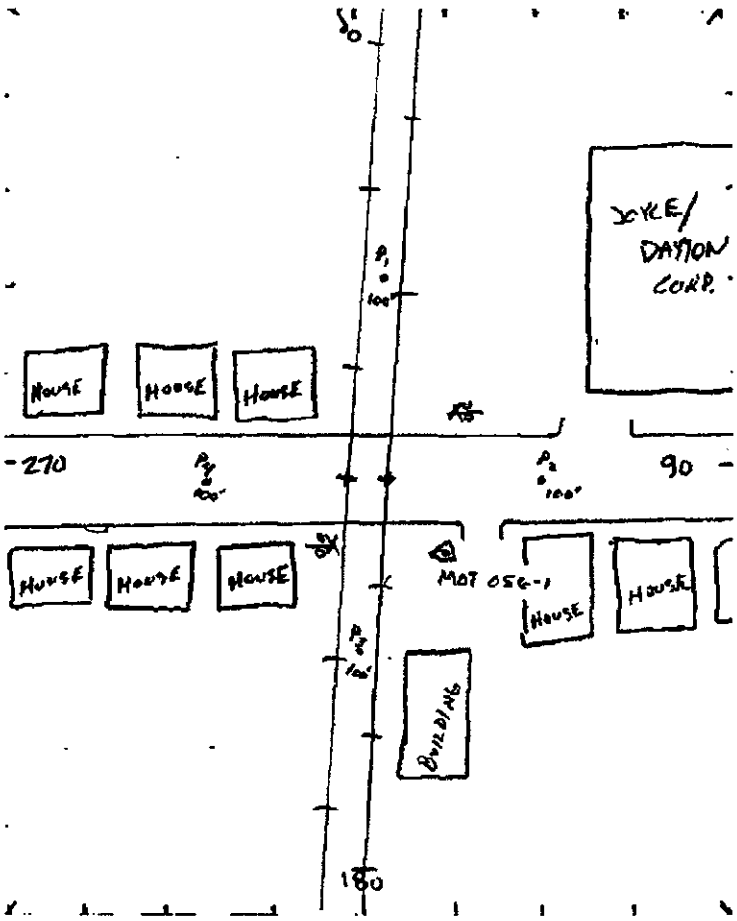

Back to Top

Field Sketch

Crossing Angle ☐ 0-29° ☐ 30-59° ☐ 60-90° Measured in _____ Quadrant?

Sketch by: _____

TABLE I

Clearing Sight Distances

Maximum Authorized Train Speed	Distance (dT) Along Railroad from Crossing (ft)
1 - 10	240
15	360
20	480
25	600
30	720
35	840
40	960
45	1080
50	1200
55	1320
60	1440
65	1560
70	1680
75	1800
80	1920
85	2040
90	2160

Source: R-H Grade Crossing Handbook Table 36 (pp. 132-133)

Notes:

All calculated distances are rounded up to the next higher 5-foot increment.

Distances indicated are for 65-ft double bottom semi-tractor trailers and level single track 90 degree crossings; and may need to be adjusted for multiple tracks, skewed crossings or approaches on grades.

Clearing Sight Distance is to be measured in each vehicle travel direction at non-gated crossings as viewed from a point 25 feet from centerline of nearest track in the center of whichever travel lane is nearest the direction along track being measured.

Table 2

Stopping Sight Distances

Highway Vehicle Speed	Distance (dH) Along Roadway from Crossing (ft)
0	n/a
5	50
10	70
15	105
20	135
25	180
30	225
35	280
40	340
45	410
50	490
55	570
60	660
65	760
70	865

Source: R-H Grade Crossing Handbook Table 36 (pp. 132-133)

Notes:

All calculated distances are rounded up to the next higher 5-foot increment.

Distances indicated are for 65-ft double bottom semi-tractor trailers on dry level pavements.

Stopping Sight Distance is to be measured on each roadway approach to crossing from stop bar.

DEPARTMENT OF TRANSPORTATION
FEDERAL RAILROAD ADMINISTRATION (FRA)

HIGHWAY-RAIL GRADE CROSSING ACCIDENT/INCIDENT REPORT

OMB Approval No. 2130-0500

Name Of		Alphabetic Code	RR Accident/Incident No.
1. Reporting Railroad	Norfolk Southern Corp. [NS]	1a. NS	1b. 035429
2. Other Railroad Involved in Train Accident/Incident		2a.	2b.
3. Railroad Responsible for Track Maintenance	Norfolk Southern Corp. [NS]	3a. NS	3b. 035429

4. U.S. DOT-AAR Grade Crossing ID No.	5. Date of Accident/Incident	6. Time of Accident/Incident
524650E	12/26/08	11:20 AM

7. Nearest Railroad Station	8. Division	9. County	10. State Abbr.	Code
OXFORD	LAKE	MONTGOMERY	39	OH

11. City *(if in a city)* MIAMISBURG | 12. Highway Name or No. KERCHER ST | ☑ Public ☐ Private

Highway User Involved

13. Type — A. Auto, B. Truck, C. Truck-trailer, D. Pick-up truck, E. Van, F. Bus, G. School Bus, H. Motorcycle, J. Other Motor Vehicle, K. Pedestrian, M. Other *(specify)* — Code: D

14. Vehicle Speed *(est. mph at impact)*: 15

15. Direction *(geographical)* — 1. North 2. South 3. East 4. West — Code: 1

16. Position — 1. Stalled on crossing 2. Stopped on Crossing 3. Moving over crossing 4. Trapped — Code: 3

20a. Was the highway user and/or rail equipment involved in the impact transporting hazardous materials? — 1. Highway User 2. Rail Equipment 3. Both 4. Neither — Code: 2

Rail Equipment Involved

17. Equipment — 1. Train *(units pulling)* 2. Train *(units pushing)* 3. Train *(standing)* 4. Car(s) *(moving)* 5. Car(s) *(standing)* 6. Light loco(s) *(moving)* 7. Light loco(s) *(standing)* 8. Other *(specify)* A. Train pulling- RCL B. Train pushing- RCL C. Train standing- RCL — Code: 1

18. Position of Car Unit in Train: 1

19. Circumstance — 1. Rail equipment struck highway user 2. Rail equipment struck by highway user — Code: 1

20b. Was there a hazardous materials release by — 1. Highway User 2. Rail Equipment 3. Both 4. Neither — Code: 4

20c. State the name and quantity of the hazardous materials released, if any

21. Temperature *(specify if minus)*: 45 °F

22. Visibility *(single entry)* — 1. Dawn 2. Day 3. Dusk 4. Dark — Code: 2

23. Weather *(single entry)* — 1. Clear 2. Cloudy 3. Rain 4. Fog 5. Sleet 6. Snow — Code: 1

24. Type of Equipment Consist *(single entry)* — 1. Freight train 2. Passenger train 3. Commuter train 4. Work train 5. Single car 6. Cut of cars 7. Yard/Switching 8. Light loco(s) 9. Main./inspect. car A. Spec. MoW Equip — Code: 1

25. Track Type Used by Rail Equipment Involved — 1. Main 2. Yard 3. Siding 4. Industry — Code: 1

26. Track Number or Name: MAIN #1

27. FRA Track Class: 4

28. Number of Locomotive Units: 1

29. Number of Cars: 16

30. Consist Speed *(Recorded if available)* — R. Recorded E. Estimated: 40 mph — Code: E

31. Time Table Direction — 1. North 2. South 3. East 4. West — Code: 4

32. Type of Crossing Warning — 1. Gates 2. Cantilever FLS 3. Standard FLS 4. Wig wags 5. Hwy. traffic signals 6. Audible 7. Crossbucks 8. Stop signs 9. Watchman 10. Flagged by crew 11. Other *(specify)* 12. None

Code(s): 03 07

33. Signaled Crossing Warning: 20 sec warn min (1);

34. Whistle Ban — 1. Yes 2. No 3. Unknown — Code: 2

35. Location of Warning — 1. Both Sides 2. Side of Vehicle Approach 3. Opposite Side of Vehicle Approach — Code: 1

36. Crossing Warning Interconnected with Highway Signals — 1. Yes 2. No 3. Unknown — Code: 2

37. Crossing Illuminated by Street Lights or Special Lights — 1. Yes 2. No 3. Unknown — Code: 2

38. Driver's Age: 29

39. Driver's Gender — 1. Male 2. Female — Code: 1

40. Driver Drove Behind or in Front of Train and Struck or was Struck by Second Train — 1. Yes 2. No 3. Unknown — Code: 1

41. Driver — 1. Drove around or thru the gate 2. Stopped and then proceeded 3. Did not stop 4. Stopped on crossing 5. Other *(specify)* — Code: 3

42. Driver Passed Standing Highway Vehicle — 1. Yes 2. No 3. Unknown — Code: 2

43. View of Track Obscured by *(primary obstruction)* — 1. Permanent Structure 2. Standing railroad equipment 3. Passing Train 4. Topography 5. Vegetation 6. Highway Vehicles 7. Other *(specify)* 8. Not Obstructed — Code: 8

Casualties to:	Killed	Injured
46. Highway-Rail Crossing Users	0	2
49. Railroad Employees	0	0
52. Passengers on Train	0	0

44. Driver was — 1. Killed 2. Injured 3. Uninjured — Code: 2

45. Was Driver in the Vehicle? — 1. Yes 2. No — Code: 1

47. Highway Vehicle Property Damage *(est. dollar damage)*: $1,500

48. Total Number of Highway-Rail Crossing Users *(include driver)*: 2

50. Total Number of People on Train *(include passengers and crew)*: 2

51. Is a Rail Equipment Accident / Incident Report Being Filed — 1. Yes 2. No — Code: 2

53a. Special Study Block | 53b. Special Study Block

54. Narrative Description

HIGHWAY USER ATTEMPTED TO TRAVERSE CROSSING IMMEDIATELY BEHIND EASTBOUND TRAIN ON MAIN TWO INTO THE PATH OF WESTBOUND TRAIN 169 ON MAIN ONE.

55. Typed Name and Title	56. Signature	57. Date

FORM FRA F 6180.57

* NOTE THAT ALL CASUALTIES MUST BE REPORTED ON FORM FRA F 6180.55A

DEPARTMENT OF TRANSPORTATION
FEDERAL RAILROAD ADMINISTRATION (FRA)

HIGHWAY-RAIL GRADE CROSSING ACCIDENT/INCIDENT REPORT

OMB Approval No. 2130-0500

Name Of		Alphabetic Code	RR Accident/Incident No.
1. Reporting Railroad	Norfolk Southern Corp. [NS]	1a. NS	1b. 017130
2. Other Railroad Involved in Train Accident/Incident		2a.	2b.
3. Railroad Responsible for Track Maintenance	Norfolk Southern Corp. [NS]	3a. NS	3b. 017130

4. U.S. DOT-AAR Grade Crossing ID No. **524650E** | 5. Date of Accident/Incident 06/18/04 | 6. Time of Accident/Incident 09:30 AM

7. Nearest Railroad Station	8. Division	9. County	10. State Abbr.	Code
MIAMISBURG	LAKE	MONTGOMERY	39	OH

11. City *(if in a city)* MIAMISBURG | 12. Highway Name or No. KERCHER ST | ☑ Public ☐ Private

Highway User Involved

13. Type — A. Auto, B. Truck, C. Truck-trailer, D. Pick-up truck, E. Van, F. Bus, G. School Bus, H. Motorcycle, J. Other Motor Vehicle, K. Pedestrian, M. Other *(specify)* — Code: B

14. Vehicle Speed *(est. mph at impact)*: 2

15. Direction *(geographical)* — 1. North 2. South 3. East 4. West — Code: 4

16. Position — 1. Stalled on crossing 2. Stopped on Crossing 3. Moving over crossing 4. Trapped — Code: 3

20a. Was the highway user and/or rail equipment involved in the impact transporting hazardous materials? — 1. Highway User 2. Rail Equipment 3. Both 4. Neither — Code: 2

Rail Equipment Involved

17. Equipment — 1. Train *(units pulling)* 2. Train *(units pushing)* 3. Train *(standing)* 4. Car(s) *(moving)* 5. Car(s) *(standing)* 6. Light loco(s) *(moving)* 7. Light loco(s) *(standing)* 8. Other *(specify)* A. Train pulling- RCL B. Train pushing- RCL C. Train standing- RCL — Code: 1

18. Position of Car Unit in Train: 1

19. Circumstance — 1. Rail equipment struck highway user 2. Rail equipment struck by highway user — Code: 1

20b. Was there a hazardous materials release by — 1. Highway User 2. Rail Equipment 3. Both 4. Neither — Code: 4

20c. State the name and quantity of the hazardous materials released, if any

21. Temperature *(specify if minus)*: 85 °F

22. Visibility *(single entry)* — 1. Dawn 2. Day 3. Dusk 4. Dark — Code: 2

23. Weather *(single entry)* — 1. Clear 2. Cloudy 3. Rain 4. Fog 5. Sleet 6. Snow — Code: 1

24. Type of Equipment Consist *(single entry)* — 1. Freight train 2. Passenger train 3. Commuter train 4. Work train 5. Single car 6. Cut of cars 7. Yard/Switching 8. Light loco(s) 9. Main./inspect. car A. Spec. MoW Equip — Code: 1

25. Track Type Used by Rail Equipment Involved — 1. Main 2. Yard 3. Siding 4. Industry — Code: 1

26. Track Number or Name: MAIN

27. FRA Track Class: 4

28. Number of Locomotive Units: 2

29. Number of Cars: 63

30. Consist Speed *(Recorded if available)* — R. Recorded E. Estimated — 45 mph — Code: E

31. Time Table Direction — 1. North 2. South 3. East 4. West — Code: 3

32. Type of Crossing Warning — 1. Gates 2. Cantilever FLS 3. Standard FLS 4. Wig wags 5. Hwy. traffic signals 6. Audible 7. Crossbucks 8. Stop signs 9. Watchman 10. Flagged by crew 11. Other *(specify)* 12. None

Code(s): 03 | 07

33. Signaled Crossing Warning: 20 sec warn min (1);

34. Whistle Ban — 1. Yes 2. No 3. Unknown — Code: 2

35. Location of Warning — 1. Both Sides 2. Side of Vehicle Approach 3. Opposite Side of Vehicle Approach — Code: 1

36. Crossing Warning Interconnected with Highway Signals — 1. Yes 2. No 3. Unknown — Code: 2

37. Crossing Illuminated by Street Lights or Special Lights — 1. Yes 2. No 3. Unknown — Code: 1

38. Driver's Age: 36

39. Driver's Gender — 1. Male 2. Female — Code: 1

40. Driver Drove Behind or in Front of Train and Struck or was Struck by Second Train — 1. Yes 2. No 3. Unknown — Code: 2

41. Driver — 1. Drove around or thru the gate 2. Stopped and then proceeded 3. Did not stop 4. Stopped on crossing 5. Other *(specify)* — Code: 5

42. Driver Passed Standing Highway Vehicle — 1. Yes 2. No 3. Unknown — Code: 2

43. View of Track Obscured by *(primary obstruction)* — 1. Permanent Structure 2. Standing railroad equipment 3. Passing Train 4. Topography 5. Vegetation 6. Highway Vehicles 7. Other *(specify)* 8. Not Obstructed — Code: 8

Casualties to:	Killed	Injured
46. Highway-Rail Crossing Users	0	1
49. Railroad Employees	0	0
52. Passengers on Train		

44. Driver was — 1. Killed 2. Injured 3. Uninjured — Code: 2

45. Was Driver in the Vehicle? — 1. Yes 2. No — Code: 1

47. Highway Vehicle Property Damage *(est. dollar damage)*: $3,000

48. Total Number of Highway-Rail Crossing Users *(include driver)*: 1

50. Total Number of People on Train *(include passengers and crew)*: 2

51. Is a Rail Equipment Accident / Incident Report Being Filed — 1. Yes 2. No — Code: 2

53a. Special Study Block | 53b. Special Study Block

54. Narrative Description

ITEM 41: DRIVER PULLED INTO FOUL OF CROSSING.

55. Typed Name and Title | 56. Signature | 57. Date

FORM FRA F 6180.57

* NOTE THAT ALL CASUALTIES MUST BE REPORTED ON FORM FRA F 6180.55A

DEPARTMENT OF TRANSPORTATION
FEDERAL RAILROAD ADMINISTRATION (FRA)

HIGHWAY-RAIL GRADE CROSSING ACCIDENT/INCIDENT REPORT

OMB Approval No. 2130-0500

Name Of		Alphabetic Code	RR Accident/Incident No.
1. Reporting Railroad	Consolidated Rail Corp. [CR]	1a. CR	1b. 0810306
2. Other Railroad Involved in Train Accident/Incident		2a.	2b.
3. Railroad Responsible for Track Maintenance	Consolidated Rail Corp. [CR]	3a. CR	3b. 0810306

4. U.S. DOT-AAR Grade Crossing ID No.	5. Date of Accident/Incident	6. Time of Accident/Incident
524650E	03/31/87	02:57 AM

7. Nearest Railroad Station	8. Division	9. County	10. State Abbr.	Code
OXFORD		MONTGOMERY	39	OH

11. City *(if in a city)* MIAMISBURG | 12. Highway Name or No. KERCHER ST | ☑ Public ☐ Private

Highway User Involved

13. Type — A. Auto, B. Truck, C. Truck-trailer, D. Pick-up truck, E. Van, F. Bus, G. School Bus, H. Motorcycle, J. Other Motor Vehicle, K. Pedestrian, M. Other *(specify)* — Code: A

14. Vehicle Speed *(est. mph at impact)*: 5

15. Direction *(geographical)*: 1. North 2. South 3. East 4. West — Code: 3

16. Position: 1. Stalled on crossing 2. Stopped on Crossing 3. Moving over crossing 4. Trapped — Code: 3

20a. Was the highway user and/or rail equipment involved in the impact transporting hazardous materials? 1. Highway User 2. Rail Equipment 3. Both 4. Neither — Code: 4

Rail Equipment Involved

17. Equipment: 1. Train *(units pulling)* 2. Train *(units pushing)* 3. Train *(standing)* 4. Car(s) *(moving)* 5. Car(s) *(standing)* 6. Light loco(s) *(moving)* 7. Light loco(s) *(standing)* 8. Other *(specify)* A. Train pulling- RCL B. Train pushing- RCL C. Train standing- RCL — Code: 1

18. Position of Car Unit in Train: 2

19. Circumstance: 1. Rail equipment struck highway user 2. Rail equipment struck by highway user — Code: 2

20b. Was there a hazardous materials release by: 1. Highway User 2. Rail Equipment 3. Both 4. Neither — Code:

20c. State the name and quantity of the hazardous materials released, if any

21. Temperature *(specify if minus)*: 30 °F

22. Visibility *(single entry)*: 1. Dawn 2. Day 3. Dusk 4. Dark — Code: 4

23. Weather *(single entry)*: 1. Clear 2. Cloudy 3. Rain 4. Fog 5. Sleet 6. Snow — Code: 2

24. Type of Equipment Consist *(single entry)*: 1. Freight train 2. Passenger train 3. Commuter train 4. Work train 5. Single car 6. Cut of cars 7. Yard/Switching 8. Light loco(s) 9. Main./inspect. car A. Spec. MoW Equip — Code: 1

25. Track Type Used by Rail Equipment Involved: 1. Main 2. Yard 3. Siding 4. Industry — Code: 1

26. Track Number or Name: #1 MAIN TRACK

27. FRA Track Class: 3

28. Number of Locomotive Units: 2

29. Number of Cars: 108

30. Consist Speed *(Recorded if available)*: R. Recorded E. Estimated — 30 mph — Code: R

31. Time Table Direction: 1. North 2. South 3. East 4. West — Code: 4

32. Type of Crossing Warning: 1. Gates 2. Cantilever FLS 3. Standard FLS 4. Wig wags 5. Hwy. traffic signals 6. Audible 7. Crossbucks 8. Stop signs 9. Watchman 10. Flagged by crew 11. Other *(specify)* 12. None

Code(s)	03	07					

33. Signaled Crossing Warning: 20 sec warn min (1);

34. Whistle Ban: 1. Yes 2. No 3. Unknown — Code:

35. Location of Warning: 1. Both Sides 2. Side of Vehicle Approach 3. Opposite Side of Vehicle Approach — Code: 1

36. Crossing Warning Interconnected with Highway Signals: 1. Yes 2. No 3. Unknown — Code: 2

37. Crossing Illuminated by Street Lights or Special Lights: 1. Yes 2. No 3. Unknown — Code: 1

38. Driver's Age

39. Driver's Gender: 1. Male 2. Female — Code:

40. Driver Drove Behind or in Front of Train and Struck or was Struck by Second Train: 1. Yes 2. No 3. Unknown — Code: 2

41. Driver: 1. Drove around or thru the gate 2. Stopped and then proceeded 3. Did not stop 4. Stopped on crossing 5. Other *(specify)* — Code: 3

42. Driver Passed Standing Highway Vehicle: 1. Yes 2. No 3. Unknown — Code: 2

43. View of Track Obscured by *(primary obstruction)*: 1. Permanent Structure 2. Standing railroad equipment 3. Passing Train 4. Topography 5. Vegetation 6. Highway Vehicles 7. Other *(specify)* 8. Not Obstructed — Code: 8

Casualties to:	Killed	Injured
46. Highway-Rail Crossing Users	0	1
49. Railroad Employees	0	0
52. Passengers on Train	0	0

44. Driver was: 1. Killed 2. Injured 3. Uninjured — Code: 2

45. Was Driver in the Vehicle? 1. Yes 2. No — Code: 1

47. Highway Vehicle Property Damage *(est. dollar damage)*: $0

48. Total Number of Highway-Rail Crossing Users *(include driver)*: 1

50. Total Number of People on Train *(include passengers and crew)*:

51. Is a Rail Equipment Accident / Incident Report Being Filed: 1. Yes 2. No — Code: 2

53a. Special Study Block | 53b. Special Study Block

54. Narrative Description

55. Typed Name and Title | 56. Signature | 57. Date

FORM FRA F 6180.57

* NOTE THAT ALL CASUALTIES MUST BE REPORTED ON FORM FRA F 6180.55A

DEPARTMENT OF TRANSPORTATION
FEDERAL RAILROAD ADMINISTRATION (FRA)

HIGHWAY-RAIL GRADE CROSSING ACCIDENT/INCIDENT REPORT

OMB Approval No. 2130-0500

Name Of		Alphabetic Code	RR Accident/Incident No.
1. Reporting Railroad	Detroit, Toledo And Ironton RR Co. [DTI]	1a. DTI	1b. 799
2. Other Railroad Involved in Train Accident/Incident		2a.	2b.
3. Railroad Responsible for Track Maintenance	Consolidated Rail Corp. [CR]	3a. CR	3b. XXX

4. U.S. DOT-AAR Grade Crossing ID No.	5. Date of Accident/Incident	6. Time of Accident/Incident
524650E	03/15/78	09:30 PM

7. Nearest Railroad Station	8. Division	9. County	10. State Abbr.	Code
		MONTGOMERY	39	OH

11. City (if in a city)	12. Highway Name or No.	
MIAMISBURG	KERCHER	☑ Public ☐ Private

Highway User Involved

13. Type — A. Auto, B. Truck, C. Truck-trailer, D. Pick-up truck, E. Van, F. Bus, G. School Bus, H. Motorcycle, J. Other Motor Vehicle, K. Pedestrian, M. Other (specify) — Code: B

14. Vehicle Speed (est. mph at impact)

15. Direction (geographical) — 1. North 2. South 3. East 4. West — Code: 1

16. Position — 1. Stalled on crossing 2. Stopped on Crossing 3. Moving over crossing 4. Trapped — Code: 3

20a. Was the highway user and/or rail equipment involved in the impact transporting hazardous materials? — 1. Highway User 2. Rail Equipment 3. Both 4. Neither — Code: 4

Rail Equipment Involved

17. Equipment — 1. Train (units pulling) 2. Train (units pushing) 3. Train (standing) 4. Car(s) (moving) 5. Car(s) (standing) 6. Light loco(s) (moving) 7. Light loco(s) (standing) 8. Other (specify) A. Train pulling- RCL B. Train pushing- RCL C. Train standing- RCL — Code: 1

18. Position of Car Unit in Train: 1

19. Circumstance — 1. Rail equipment struck highway user 2. Rail equipment struck by highway user — Code: 1

20b. Was there a hazardous materials release by — 1. Highway User 2. Rail Equipment 3. Both 4. Neither — Code:

20c. State the name and quantity of the hazardous materials released, if any

21. Temperature (specify if minus): 0 °F

22. Visibility (single entry) — 1. Dawn 2. Day 3. Dusk 4. Dark — Code: 4

23. Weather (single entry) — 1. Clear 2. Cloudy 3. Rain 4. Fog 5. Sleet 6. Snow — Code: 1

24. Type of Equipment Consist (single entry) — 1. Freight train 2. Passenger train 3. Commuter train 4. Work train 5. Single car 6. Cut of cars 7. Yard/Switching 8. Light loco(s) 9. Main./inspect. car A. Spec. MoW Equip — Code: 1

25. Track Type Used by Rail Equipment Involved — 1. Main 2. Yard 3. Siding 4. Industry — Code: 1

26. Track Number or Name: MAIN

27. FRA Track Class:

28. Number of Locomotive Units: 3

29. Number of Cars: 54

30. Consist Speed (Recorded if available) — R. Recorded, E. Estimated: 20 mph — Code: R

31. Time Table Direction — 1. North 2. South 3. East 4. West — Code: 3

32. Type of Crossing Warning — 1. Gates 2. Cantilever FLS 3. Standard FLS 4. Wig wags 5. Hwy. traffic signals 6. Audible 7. Crossbucks 8. Stop signs 9. Watchman 10. Flagged by crew 11. Other (specify) 12. None

Code(s): 03

33. Signaled Crossing Warning

34. Whistle Ban — 1. Yes 2. No 3. Unknown — Code:

35. Location of Warning — 1. Both Sides 2. Side of Vehicle Approach 3. Opposite Side of Vehicle Approach — Code: 1

36. Crossing Warning Interconnected with Highway Signals — 1. Yes 2. No 3. Unknown — Code: 2

37. Crossing Illuminated by Street Lights or Special Lights — 1. Yes 2. No 3. Unknown — Code: 3

38. Driver's Age

39. Driver's Gender — 1. Male 2. Female — Code:

40. Driver Drove Behind or in Front of Train and Struck or was Struck by Second Train — 1. Yes 2. No 3. Unknown — Code: 1

41. Driver — 1. Drove around or thru the gate 2. Stopped and then proceeded 3. Did not stop 4. Stopped on crossing 5. Other (specify) — Code: 2

42. Driver Passed Standing Highway Vehicle — 1. Yes 2. No 3. Unknown — Code: 2

43. View of Track Obscured by (primary obstruction) — 1. Permanent Structure 2. Standing railroad equipment 3. Passing Train 4. Topography 5. Vegetation 6. Highway Vehicles 7. Other (specify) 8. Not Obstructed — Code: 3

Casualties to:	Killed	Injured
46. Highway-Rail Crossing Users	0	0
49. Railroad Employees	0	0
52. Passengers on Train	0	0

44. Driver was — 1. Killed 2. Injured 3. Uninjured — Code: 3

45. Was Driver in the Vehicle? — 1. Yes 2. No — Code: 1

47. Highway Vehicle Property Damage (est. dollar damage): $0

48. Total Number of Highway-Rail Crossing Users (include driver): 1

50. Total Number of People on Train (include passengers and crew):

51. Is a Rail Equipment Accident / Incident Report Being Filed — 1. Yes 2. No — Code:

53a. Special Study Block

53b. Special Study Block

54. Narrative Description

55. Typed Name and Title

56. Signature

57. Date

FORM FRA F 6180.57

* NOTE THAT ALL CASUALTIES MUST BE REPORTED ON FORM FRA F 6180.55A

DEPARTMENT OF TRANSPORTATION
FEDERAL RAILROAD ADMINISTRATION (FRA)

HIGHWAY-RAIL GRADE CROSSING ACCIDENT/INCIDENT REPORT

OMB Approval No. 2130-0500

Name Of	Alphabetic Code	RR Accident/Incident No.
1. Reporting Railroad: Consolidated Rail Corp. [CR]	1a. CR	1b. 0820310
2. Other Railroad Involved in Train Accident/Incident	2a.	2b.
3. Railroad Responsible for Track Maintenance	3a.	3b.

4. U.S. DOT-AAR Grade Crossing ID No. **524650E** | 5. Date of Accident/Incident **10/21/76** | 6. Time of Accident/Incident **12:50 PM**

7. Nearest Railroad Station: **MIAMISBURG** | 8. Division: | 9. County: **MONTGOMERY** | 10. State Abbr. **39** Code **OH**

11. City *(if in a city)* **MIAMISBURG** | 12. Highway Name or No. **KERCHER STREET** | ☑ Public ☐ Private

Highway User Involved

13. Type — A. Auto, B. Truck, C. Truck-trailer, D. Pick-up truck, E. Van, F. Bus, G. School Bus, H. Motorcycle, J. Other Motor Vehicle, K. Pedestrian, M. Other *(specify)* — Code: **B**

14. Vehicle Speed *(est. mph at impact)*

15. Direction *(geographical)* 1. North 2. South 3. East 4. West — Code: **1**

16. Position 1. Stalled on crossing 2. Stopped on Crossing 3. Moving over crossing 4. Trapped — Code: **3**

20a. Was the highway user and/or rail equipment involved in the impact transporting hazardous materials? 1. Highway User 2. Rail Equipment 3. Both 4. Neither — Code: **4**

Rail Equipment Involved

17. Equipment — 1. Train *(units pulling)* 2. Train *(units pushing)* 3. Train *(standing)* 4. Car(s) *(moving)* 5. Car(s) *(standing)* 6. Light loco(s) *(moving)* 7. Light loco(s) *(standing)* 8. Other *(specify)* A. Train pulling- RCL B. Train pushing- RCL C. Train standing- RCL — Code: **2**

18. Position of Car Unit in Train: **3**

19. Circumstance 1. Rail equipment struck highway user 2. Rail equipment struck by highway user — Code: **1**

20b. Was there a hazardous materials release by 1. Highway User 2. Rail Equipment 3. Both 4. Neither — Code:

20c. State the name and quantity of the hazardous materials released, if any

21. Temperature *(specify if minus)* **44 °F**

22. Visibility *(single entry)* 1. Dawn 2. Day 3. Dusk 4. Dark — Code: **2**

23. Weather *(single entry)* 1. Clear 2. Cloudy 3. Rain 4. Fog 5. Sleet 6. Snow — Code: **2**

24. Type of Equipment Consist *(single entry)* 1. Freight train 2. Passenger train 3. Commuter train 4. Work train 5. Single car 6. Cut of cars 7. Yard/Switching 8. Light loco(s) 9. Main./inspect. car A. Spec. MoW Equip — Code: **1**

25. Track Type Used by Rail Equipment Involved 1. Main 2. Yard 3. Siding 4. Industry — Code: **3**

26. Track Number or Name: **NO 2 WESTWARD MAIN**

27. FRA Track Class: **3**

28. Number of Locomotive Units: **1**

29. Number of Cars: **2**

30. Consist Speed *(Recorded if available)* R. Recorded E. Estimated **10** mph — Code: **E**

31. Time Table Direction 1. North 2. South 3. East 4. West — Code: **4**

32. Type of Crossing Warning 1. Gates 2. Cantilever FLS 3. Standard FLS 4. Wig wags 5. Hwy. traffic signals 6. Audible 7. Crossbucks 8. Stop signs 9. Watchman 10. Flagged by crew 11. Other *(specify)* 12. None

Code(s): **03**

33. Signaled Crossing Warning: **20 sec warn min (1);**

34. Whistle Ban 1. Yes 2. No 3. Unknown — Code:

35. Location of Warning 1. Both Sides 2. Side of Vehicle Approach 3. Opposite Side of Vehicle Approach — Code: **1**

36. Crossing Warning Interconnected with Highway Signals 1. Yes 2. No 3. Unknown — Code: **2**

37. Crossing Illuminated by Street Lights or Special Lights 1. Yes 2. No 3. Unknown — Code:

38. Driver's Age

39. Driver's Gender 1. Male 2. Female — Code:

40. Driver Drove Behind or in Front of Train and Struck or was Struck by Second Train 1. Yes 2. No 3. Unknown — Code: **2**

41. Driver 1. Drove around or thru the gate 2. Stopped and then proceeded 3. Did not stop 4. Stopped on crossing 5. Other *(specify)* — Code: **3**

42. Driver Passed Standing Highway Vehicle 1. Yes 2. No 3. Unknown — Code: **3**

43. View of Track Obscured by *(primary obstruction)* 1. Permanent Structure 2. Standing railroad equipment 3. Passing Train 4. Topography 5. Vegetation 6. Highway Vehicles 7. Other *(specify)* 8. Not Obstructed — Code: **8**

Casualties to:	Killed	Injured
46. Highway-Rail Crossing Users	0	0
49. Railroad Employees	0	0
52. Passengers on Train	0	0

44. Driver was 1. Killed 2. Injured 3. Uninjured — Code: **3**

45. Was Driver in the Vehicle? 1. Yes 2. No — Code: **1**

47. Highway Vehicle Property Damage *(est. dollar damage)* **$300**

48. Total Number of Highway-Rail Crossing Users *(include driver)* **1**

50. Total Number of People on Train *(include passengers and crew)*

51. Is a Rail Equipment Accident / Incident Report Being Filed 1. Yes 2. No — Code: **2**

53a. Special Study Block | 53b. Special Study Block

54. Narrative Description

55. Typed Name and Title | 56. Signature | 57. Date

FORM FRA F 6180.57 * NOTE THAT ALL CASUALTIES MUST BE REPORTED ON FORM FRA F 6180.55A

DEPARTMENT OF TRANSPORTATION
FEDERAL RAILROAD ADMINISTRATION (FRA)

HIGHWAY-RAIL GRADE CROSSING ACCIDENT/INCIDENT REPORT

OMB Approval No. 2130-0500

Name Of		Alphabetic Code	RR Accident/Incident No.
1. Reporting Railroad	Penn Central Transportation Co. [PC]	1a. PC	1b. 0820304
2. Other Railroad Involved in Train Accident/Incident		2a.	2b.
3. Railroad Responsible for Track Maintenance		3a.	3b.

4. U.S. DOT-AAR Grade Crossing ID No.	5. Date of Accident/Incident	6. Time of Accident/Incident
524650E	06/14/75	06:00 PM

7. Nearest Railroad Station	8. Division	9. County	10. State Abbr.	Code
MIDDLETOWN		MONTGOMERY	39	OH

11. City *(if in a city)* MIAMISBURG | 12. Highway Name or No. KERCHER STREET | ☑ Public ☐ Private

Highway User Involved

13. Type — A. Auto, B. Truck, C. Truck-trailer, D. Pick-up truck, E. Van, F. Bus, G. School Bus, H. Motorcycle, J. Other Motor Vehicle, K. Pedestrian, M. Other *(specify)* — Code: A

14. Vehicle Speed *(est. mph at impact)*: 5

15. Direction *(geographical)* 1. North 2. South 3. East 4. West — Code: 1

16. Position 1. Stalled on crossing 2. Stopped on Crossing 3. Moving over crossing 4. Trapped — Code: 3

20a. Was the highway user and/or rail equipment involved in the impact transporting hazardous materials? 1. Highway User 2. Rail Equipment 3. Both 4. Neither — Code: 4

Rail Equipment Involved

17. Equipment — 1. Train *(units pulling)* 2. Train *(units pushing)* 3. Train *(standing)* 4. Car(s) *(moving)* 5. Car(s) *(standing)* 6. Light loco(s) *(moving)* 7. Light loco(s) *(standing)* 8. Other *(specify)* A. Train pulling- RCL B. Train pushing- RCL C. Train standing- RCL — Code: 8

18. Position of Car Unit in Train

19. Circumstance 1. Rail equipment struck highway user 2. Rail equipment struck by highway user — Code: 1

20b. Was there a hazardous materials release by 1. Highway User 2. Rail Equipment 3. Both 4. Neither — Code:

20c. State the name and quantity of the hazardous materials released, if any

21. Temperature *(specify if minus)*: 80 °F

22. Visibility *(single entry)* 1. Dawn 2. Day 3. Dusk 4. Dark — Code: 2

23. Weather *(single entry)* 1. Clear 2. Cloudy 3. Rain 4. Fog 5. Sleet 6. Snow — Code: 2

24. Type of Equipment Consist *(single entry)* 1. Freight train 2. Passenger train 3. Commuter train 4. Work train 5. Single car 6. Cut of cars 7. Yard/Switching 8. Light loco(s) 9. Main./inspect. car A. Spec. MoW Equip. — Code: 4

25. Track Type Used by Rail Equipment Involved 1. Main 2. Yard 3. Siding 4. Industry — Code: 3

26. Track Number or Name: SIDING

27. FRA Track Class: 1

28. Number of Locomotive Units: 0

29. Number of Cars: 0

30. Consist Speed *(Recorded if available)* R. Recorded E. Estimated: 4 mph — Code: E

31. Time Table Direction 1. North 2. South 3. East 4. West — Code: 3

32. Type of Crossing Warning 1. Gates 2. Cantilever FLS 3. Standard FLS 4. Wig wags 5. Hwy. traffic signals 6. Audible 7. Crossbucks 8. Stop signs 9. Watchman 10. Flagged by crew 11. Other *(specify)* 12. None

Code(s): 03

33. Signaled Crossing Warning: Allgd. no warn (4);

34. Whistle Ban 1. Yes 2. No 3. Unknown — Code:

35. Location of Warning 1. Both Sides 2. Side of Vehicle Approach 3. Opposite Side of Vehicle Approach — Code: 1

36. Crossing Warning Interconnected with Highway Signals 1. Yes 2. No 3. Unknown — Code: 2

37. Crossing Illuminated by Street Lights or Special Lights 1. Yes 2. No 3. Unknown — Code: 2

38. Driver's Age

39. Driver's Gender 1. Male 2. Female — Code:

40. Driver Drove Behind or in Front of Train and Struck or was Struck by Second Train 1. Yes 2. No 3. Unknown — Code: 2

41. Driver 1. Drove around or thru the gate 2. Stopped and then proceeded 3. Did not stop 4. Stopped on crossing 5. Other *(specify)* — Code: 3

42. Driver Passed Standing Highway Vehicle 1. Yes 2. No 3. Unknown — Code: 3

43. View of Track Obscured by *(primary obstruction)* 1. Permanent Structure 2. Standing railroad equipment 3. Passing Train 4. Topography 5. Vegetation 6. Highway Vehicles 7. Other *(specify)* 8. Not Obstructed — Code: 8

Casualties to:	Killed	Injured
46. Highway-Rail Crossing Users	0	0
49. Railroad Employees	0	0
52. Passengers on Train	0	0

44. Driver was 1. Killed 2. Injured 3. Uninjured — Code: 3

45. Was Driver in the Vehicle? 1. Yes 2. No — Code: 1

47. Highway Vehicle Property Damage *(est. dollar damage)*: $200

48. Total Number of Highway-Rail Crossing Users *(include driver)*: 1

50. Total Number of People on Train *(include passengers and crew)*:

51. Is a Rail Equipment Accident / Incident Report Being Filed 1. Yes 2. No — Code: 2

53a. Special Study Block | 53b. Special Study Block

54. Narrative Description

55. Typed Name and Title | 56. Signature | 57. Date

FORM FRA F 6180.57 * NOTE THAT ALL CASUALTIES MUST BE REPORTED ON FORM FRA F 6180.55A

Ohio Rail Development Commission
1980 W. Broad Street, 2nd Floor
Columbus, OH 43223

Diagnostic Review Team Survey

Date: 9-23-11

Location Data

Street or Road Name:	Mound Ave		
Route/Road Number (i.e. Twp., Co., SR or US)		AAR-DOT No.:	524659R
County: Montgomery	Township:	City: (In or Near)	Miamisburg
Railroad Name: Norfolk Southern (NS)	Railroad Division: Dearborn	Branch/Line Name:	Cincinnati LI
Nearest RR Timetable Station: Miamisburg		RR Milepost:	218.7

On-Site Review Team

(Include: Name – Organization – Phone Number)

1. TIM PERKINS ORDC 614-644-0284
2. Matt Malich ORDC 614-387-5162
3. GEORGE MARTIN PUCO 614-752-9107
4. DAVE BOWLIN CITY OF MIAMISBURG 937-847-6639
5. Derrick Drake NS 304-712-0228
6. BOB STANLEY CITY OF MIAMISBURG 937 847 6531
7.
8.
9.
10.
11.
12.
13.

Existing Traffic Control Devices

Type of Warning Devices	Installed?		Quantity/Comments
Advance Warning Signs	☑ Yes	☐ No	
'Stop' Signs	☐ Yes	☑ No	
'Stop Ahead' Signs	☐ Yes	☑ No	
Pavement Markings	☑ Yes	☐ No	
Crossbucks	☐ Yes	☐ No	
Number of Tracks Signs	☐ Yes	☑ No	
Inventory Tags	☑ Yes	☐ No	
Interconnected Highway Traffic Signal	☐ Yes	☑ No	
Mast-Mounted Flashing Lights	☑ Yes	☐ No	
Cantilever Flashing Lights	☐ Yes	☑ No	Number: Length:
Side Lights	☑ Yes	☐ No	
Automatic Gates	☑ Yes	☐ No	Number: Length:
Bells	☑ Yes	☐ No	

Sidewalk Gate Arms	☐ Yes ☑ No	
'No Turn' Signs	☐ Yes ☑ No	
Illumination	☐ Yes ☑ No	
Is crossing flagged by train crew?	☐ Yes ☑ No	
Other	☐ Yes ☑ No	

Safety Data (Obtain crash reports, if possible, prior to review)

	Initial Information (from database)	Revised
Number & dates of crashes in previous 5 years	0	
Hazard Ranking	1600 Date Run: 8/19/2011	

Railroad Data

Railroad Characteristics	Initial Information (from database)	Revised
Total trains per day	18	
< 1 per day		
Day thru trains	6	
Night thru trains	10	
Daytime switching movements	2	
Nighttime switching movements	0	
Total number of tracks	2	
Number of main tracks	2	
Number of other tracks	0	
Maximum train speed	50	
Typical train speed		
Amtrak		

If non-gated crossing, is clearing sight distance adequate in all quadrants? (See Table 1) ☐ Yes ☐ No

If multiple tracks, can two trains occupy crossing at the same time? ☑ Yes ☐ No

Can one train block the motorists' view of another train at crossing? ☑ Yes (Explain below) ☐ No

Are there other track(s) crossing this same roadway within 100 ft of this crossing? ☐ Yes ☑ No

If yes, Crossing DOT #(if different) _____

If yes, distance _____ (take measurement between track centerlines at closest point along roadway)

Roadway Data

Local Highway Authority: City of Miamisburg

Roadway Characteristics	Initial Information (from database)	Revised
Average daily traffic	3180	
Highway paved	☒ Yes ☐ No	☐ Yes ☐ No

Roadway Surface: ☒ Blacktop ☐ Gravel ☐ Concrete ☐ Other _____

Roadway width: 44 ft. West approach 40 ft East approach

Number of highway lanes	2	
Urban or Rural	Urban	
Vehicle Speed: 25 MPH		

School Bus Operation: ☐ No ☑ Yes _____ Amount

Hazardous Materials Trucks: ☑ No ☐ Yes _____ Amount

Shoulders: ☑ No ☐ Yes

Is the shoulder surfaced? ☑ No ☐ Yes

Is there existing guardrail along roadway in crossing vicinity? ☑ No ☐ Yes

Is stopping site distance adequate? (See Table 2) ☑ Yes ☐ No If no, deficient approach(es) _____

Quadrant NE Curb and Gutter:	Quadrant SW Curb and Gutter:
☑ Functional (Curb height = 4" or more)	☑ Functional (Curb height = 4" or more)
☐ Non-functional (Curb height = Less than 4")	☐ Non-functional (Curb height = Less than 4")
☐ None	☐ None

Pedestrians: ☐ No ☑ Yes

Is sidewalk present? ☐ No ☑ Yes

Is there a nearby intersection that could cause queuing over the crossing? ☑ No ☐ Yes

If yes,

Distance _____

Is this intersection signalized? ☑ No ☐ Yes

Are the signals currently interconnected with the existing crossing warning devices? ☑ No ☐ Yes

Is it the consensus of the Diagnostic Review Team that this is a potential closure project: ☑ No ☐ Yes

Explain reasons:

Type of Development

☐ Open Space	☐ Institutional	Location of nearby schools:
☐ Industrial	☑ Commercial	
☑ Residential		

Utility Information

Is commercial power available? ☐ No ☑ Yes

Utility Provider (Company Name) D P & L Phone Number _____

Nearest Available Power Source _____

What other utilities are present? _____

Is there potential utility conflict(s) ☑ Yes ☐ No ☐ Unknown

Diagnostic Team Recommendations

	Quadrants Needed
☐ Install/upgrade active devices	
☐ Automatic Flashing Lights (AFLS)	
☐ AFLS /Cants	
☐ AFLS / Gates	
☐ AFLS / Gates / Cants	
☐ Upgrade circuitry	
☐ Sidelights	
☐ Guardrail Needed	
☐ Install/Replace curb	
☐ Other (define)	

Comments: City to relocate curb in NE quadrant. Some sidewalk restoration will be required.

☐ Install/upgrade traffic signal preemption	
☐ No improvements needed	

☐ Other (define)	

Acknowledgement of Recommendations (each entity represented at the diagnostic must have at least one signature acknowledgement):

Jim Perkins | George Martin | [illegible]

Dave Bowlin | Matt Malick | Jeff Stilley

Field Dimensions

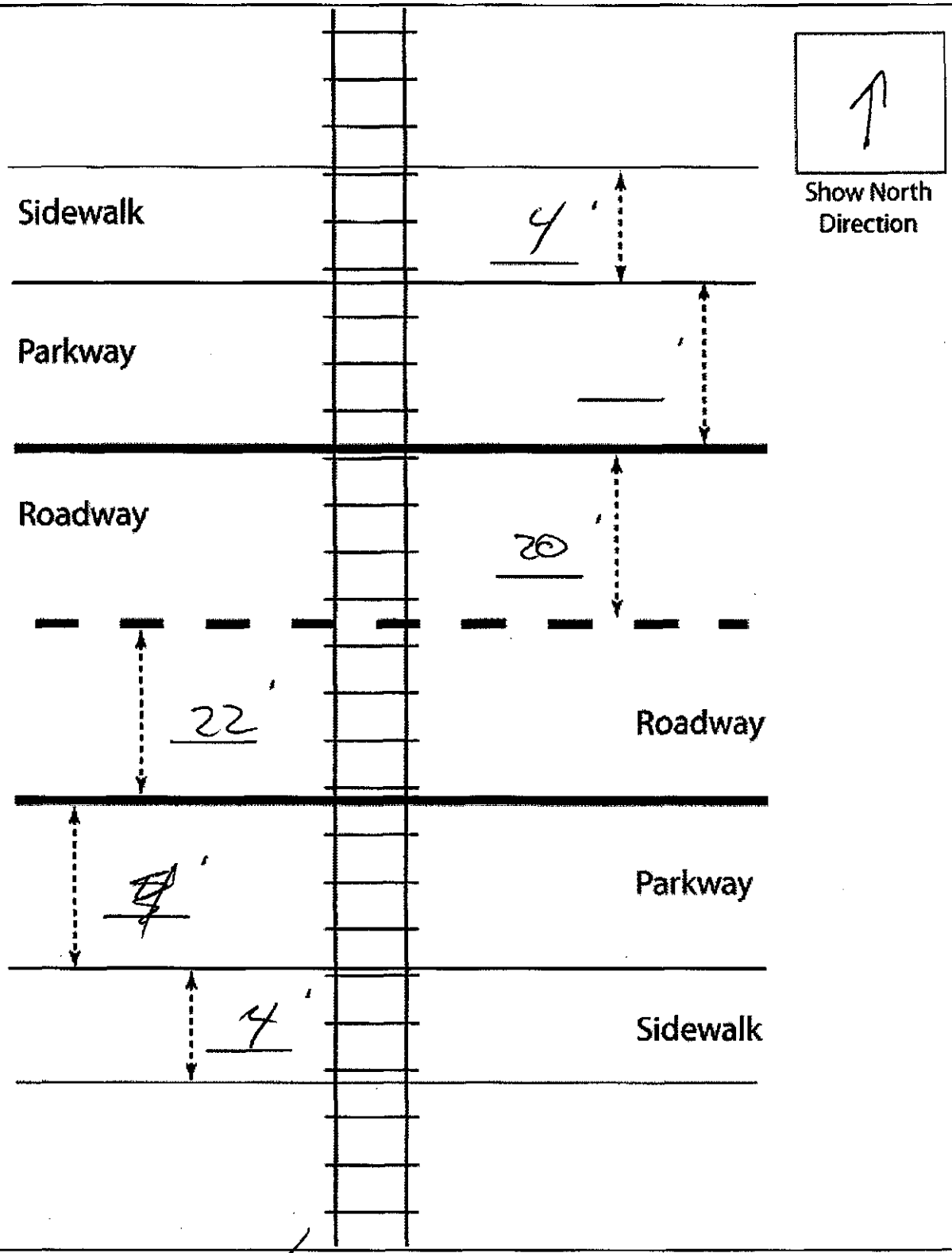

Crossing Angle ☐ 0-29° ☐ 30-59° ☑ 60-90° Measured in _____ Quadrant?

Measurements by: MM

UPDATED (12/2006)

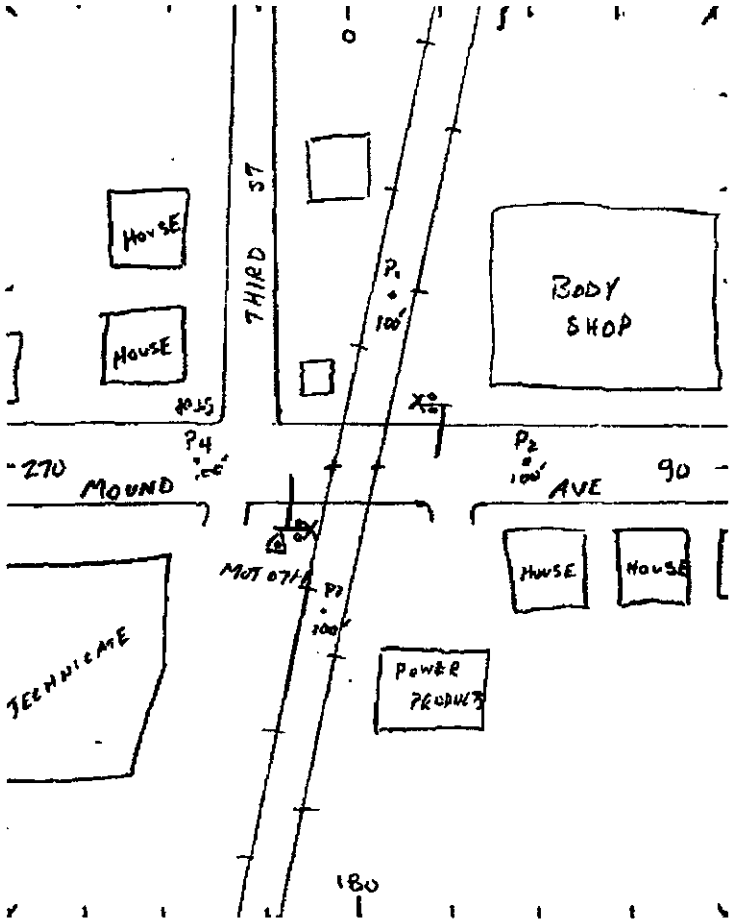
0
57
THIRD
HOUSE
HOUSE
BODY SHOP
P1
100'
X
P4
P2
100'
270
MOUND
AVE
90
HOUSE
HOUSE
P3
100'
POWER PRODUCTS
180

Back to Top

Field Sketch

Crossing Angle ☐ 0-29° ☐ 30-59° ☐ 60-90° Measured in _____ Quadrant?

Sketch by: _____

DEPARTMENT OF TRANSPORTATION
FEDERAL RAILROAD ADMINISTRATION (FRA)

HIGHWAY-RAIL GRADE CROSSING ACCIDENT/INCIDENT REPORT

OMB Approval No. 2130-0500

Name Of		Alphabetic Code	RR Accident/Incident No.
1. Reporting Railroad	Consolidated Rail Corp. [CR]	1a. CR	1b. 0820303
2. Other Railroad Involved in Train Accident/Incident		2a.	2b.
3. Railroad Responsible for Track Maintenance	Consolidated Rail Corp. [CR]	3a. CR	3b. 0820303

4. U.S. DOT-AAR Grade Crossing ID No.	5. Date of Accident/Incident	6. Time of Accident/Incident
524659R	03/10/78	01:55 PM

7. Nearest Railroad Station	8. Division	9. County	10. State Abbr.	Code
HUTCHINGS STATION		MONTGOMERY	39	OH

11. City *(if in a city)*	12. Highway Name or No.	
MIAMISBURG	FARMINGTON ROAD	☑ Public ☐ Private

Highway User Involved

13. Type — A. Auto, B. Truck, C. Truck-trailer, D. Pick-up truck, E. Van, F. Bus, G. School Bus, H. Motorcycle, J. Other Motor Vehicle, K. Pedestrian, M. Other *(specify)* — Code: B

14. Vehicle Speed *(est. mph at impact)*

15. Direction *(geographical)* — 1. North 2. South 3. East 4. West — Code: 1

16. Position — 1. Stalled on crossing 2. Stopped on Crossing 3. Moving over crossing 4. Trapped — Code: 3

20a. Was the highway user and/or rail equipment involved in the impact transporting hazardous materials? — 1. Highway User 2. Rail Equipment 3. Both 4. Neither — Code: 4

Rail Equipment Involved

17. Equipment — 1. Train *(units pulling)* 2. Train *(units pushing)* 3. Train *(standing)* 4. Car(s) *(moving)* 5. Car(s) *(standing)* 6. Light loco(s) *(moving)* 7. Light loco(s) *(standing)* 8. Other *(specify)* A. Train pulling- RCL B. Train pushing- RCL C. Train standing- RCL — Code: 1

18. Position of Car Unit in Train: 1

19. Circumstance — 1. Rail equipment struck highway user 2. Rail equipment struck by highway user — Code: 1

20b. Was there a hazardous materials release by — 1. Highway User 2. Rail Equipment 3. Both 4. Neither — Code:

20c. State the name and quantity of the hazardous materials released, if any

21. Temperature *(specify if minus)*: 38 °F

22. Visibility *(single entry)* — 1. Dawn 2. Day 3. Dusk 4. Dark — Code: 2

23. Weather *(single entry)* — 1. Clear 2. Cloudy 3. Rain 4. Fog 5. Sleet 6. Snow — Code: 1

24. Type of Equipment Consist *(single entry)* — 1. Freight train 2. Passenger train 3. Commuter train 4. Work train 5. Single car 6. Cut of cars 7. Yard/Switching 8. Light loco(s) 9. Main./inspect. car A. Spec. MoW Equip — Code: 1

25. Track Type Used by Rail Equipment Involved — 1. Main 2. Yard 3. Siding 4. Industry — Code: 1

26. Track Number or Name: NO 2 WESTBOUND MAIN

27. FRA Track Class: 3

28. Number of Locomotive Units: 2

29. Number of Cars: 47

30. Consist Speed *(Recorded if available)* — R. Recorded E. Estimated — 35 mph — Code: E

31. Time Table Direction — 1. North 2. South 3. East 4. West — Code: 4

32. Type of Crossing Warning — 1. Gates 2. Cantilever FLS 3. Standard FLS 4. Wig wags 5. Hwy. traffic signals 6. Audible 7. Crossbucks 8. Stop signs 9. Watchman 10. Flagged by crew 11. Other *(specify)* 12. None

Code(s): 07

33. Signaled Crossing Warning

34. Whistle Ban — 1. Yes 2. No 3. Unknown — Code:

35. Location of Warning — 1. Both Sides 2. Side of Vehicle Approach 3. Opposite Side of Vehicle Approach — Code: 1

36. Crossing Warning Interconnected with Highway Signals — 1. Yes 2. No 3. Unknown — Code: 2

37. Crossing Illuminated by Street Lights or Special Lights — 1. Yes 2. No 3. Unknown — Code:

38. Driver's Age

39. Driver's Gender — 1. Male 2. Female — Code:

40. Driver Drove Behind or in Front of Train and Struck or was Struck by Second Train — 1. Yes 2. No 3. Unknown — Code: 2

41. Driver — 1. Drove around or thru the gate 2. Stopped and then proceeded 3. Did not stop 4. Stopped on crossing 5. Other *(specify)* — Code: 3

42. Driver Passed Standing Highway Vehicle — 1. Yes 2. No 3. Unknown — Code: 3

43. View of Track Obscured by *(primary obstruction)* — 1. Permanent Structure 2. Standing railroad equipment 3. Passing Train 4. Topography 5. Vegetation 6. Highway Vehicles 7. Other *(specify)* 8. Not Obstructed — Code: 8

Casualties to:	Killed	Injured
46. Highway-Rail Crossing Users	0	0
49. Railroad Employees	0	0
52. Passengers on Train	0	0

44. Driver was — 1. Killed 2. Injured 3. Uninjured — Code: 3

45. Was Driver in the Vehicle? — 1. Yes 2. No — Code: 1

47. Highway Vehicle Property Damage *(est. dollar damage)*: $500

48. Total Number of Highway-Rail Crossing Users *(include driver)*: 1

50. Total Number of People on Train *(include passengers and crew)*

51. Is a Rail Equipment Accident / Incident Report Being Filed — 1. Yes 2. No — Code: 2

53a. Special Study Block

53b. Special Study Block

54. Narrative Description

55. Typed Name and Title

56. Signature

57. Date

FORM FRA F 6180.57

* NOTE THAT ALL CASUALTIES MUST BE REPORTED ON FORM FRA F 6180.55A

DEPARTMENT OF TRANSPORTATION
FEDERAL RAILROAD ADMINISTRATION (FRA)

HIGHWAY-RAIL GRADE CROSSING ACCIDENT/INCIDENT REPORT

OMB Approval No. 2130-0500

Name Of		Alphabetic Code	RR Accident/Incident No.
1. Reporting Railroad	Penn Central Transportation Co. [PC]	1a. PC	1b. 0820305
2. Other Railroad Involved in Train Accident/Incident		2a.	2b.
3. Railroad Responsible for Track Maintenance		3a.	3b.

4. U.S. DOT-AAR Grade Crossing ID No.	5. Date of Accident/Incident	6. Time of Accident/Incident
524659R	01/22/76	12:10 AM

7. Nearest Railroad Station	8. Division	9. County	10. State Abbr.	Code
MIAMISBURG		MONTGOMERY	39	OH

11. City *(if in a city)* MIAMISBURG | 12. Highway Name or No. MOUND STREET | ☑ Public ☐ Private

Highway User Involved

13. Type — A. Auto, B. Truck, C. Truck-trailer, D. Pick-up truck, E. Van, F. Bus, G. School Bus, H. Motorcycle, J. Other Motor Vehicle, K. Pedestrian, M. Other *(specify)* — Code: B

14. Vehicle Speed *(est. mph at impact)*

15. Direction *(geographical)* 1. North 2. South 3. East 4. West — Code: 1

16. Position 1. Stalled on crossing 2. Stopped on Crossing 3. Moving over crossing 4. Trapped — Code: 3

20a. Was the highway user and/or rail equipment involved in the impact transporting hazardous materials? 1. Highway User 2. Rail Equipment 3. Both 4. Neither — Code: 4

Rail Equipment Involved

17. Equipment — 1. Train *(units pulling)* 2. Train *(units pushing)* 3. Train *(standing)* 4. Car(s) *(moving)* 5. Car(s) *(standing)* 6. Light loco(s) *(moving)* 7. Light loco(s) *(standing)* 8. Other *(specify)* A. Train pulling- RCL B. Train pushing- RCL C. Train standing- RCL — Code: 1

18. Position of Car Unit in Train: 1

19. Circumstance 1. Rail equipment struck highway user 2. Rail equipment struck by highway user — Code: 1

20b. Was there a hazardous materials release by 1. Highway User 2. Rail Equipment 3. Both 4. Neither — Code:

20c. State the name and quantity of the hazardous materials released, if any

21. Temperature *(specify if minus)* 23 °F

22. Visibility *(single entry)* 1. Dawn 2. Day 3. Dusk 4. Dark — Code: 4

23. Weather *(single entry)* 1. Clear 2. Cloudy 3. Rain 4. Fog 5. Sleet 6. Snow — Code: 2

24. Type of Equipment Consist *(single entry)* 1. Freight train 2. Passenger train 3. Commuter train 4. Work train 5. Single car 6. Cut of cars 7. Yard/Switching 8. Light loco(s) 9. Main./inspect. car A. Spec. MoW Equip. — Code: 1

25. Track Type Used by Rail Equipment Involved 1. Main 2. Yard 3. Siding 4. Industry — Code: 1

26. Track Number or Name: NO 2

27. FRA Track Class: 3

28. Number of Locomotive Units: 1

29. Number of Cars: 40

30. Consist Speed *(Recorded if available)* R. Recorded E. Estimated 20 mph — Code: E

31. Time Table Direction 1. North 2. South 3. East 4. West — Code: 4

32. Type of Crossing Warning 1. Gates 2. Cantilever FLS 3. Standard FLS 4. Wig wags 5. Hwy. traffic signals 6. Audible 7. Crossbucks 8. Stop signs 9. Watchman 10. Flagged by crew 11. Other *(specify)* 12. None

Code(s): 03

33. Signaled Crossing Warning: 20 sec warn min (1);

34. Whistle Ban 1. Yes 2. No 3. Unknown — Code:

35. Location of Warning 1. Both Sides 2. Side of Vehicle Approach 3. Opposite Side of Vehicle Approach — Code: 1

36. Crossing Warning Interconnected with Highway Signals 1. Yes 2. No 3. Unknown — Code: 2

37. Crossing Illuminated by Street Lights or Special Lights 1. Yes 2. No 3. Unknown — Code: 1

38. Driver's Age

39. Driver's Gender 1. Male 2. Female — Code:

40. Driver Drove Behind or in Front of Train and Struck or was Struck by Second Train 1. Yes 2. No 3. Unknown — Code: 2

41. Driver 1. Drove around or thru the gate 2. Stopped and then proceeded 3. Did not stop 4. Stopped on crossing 5. Other *(specify)* — Code: 3

42. Driver Passed Standing Highway Vehicle 1. Yes 2. No 3. Unknown — Code: 3

43. View of Track Obscured by *(primary obstruction)* 1. Permanent Structure 2. Standing railroad equipment 3. Passing Train 4. Topography 5. Vegetation 6. Highway Vehicles 7. Other *(specify)* 8. Not Obstructed — Code: 8

Casualties to:	Killed	Injured
46. Highway-Rail Crossing Users	0	0
49. Railroad Employees	0	0
52. Passengers on Train	0	0

44. Driver was 1. Killed 2. Injured 3. Uninjured — Code: 3

45. Was Driver in the Vehicle? 1. Yes 2. No — Code: 1

47. Highway Vehicle Property Damage *(est. dollar damage)* $1,500

48. Total Number of Highway-Rail Crossing Users *(include driver)* 1

50. Total Number of People on Train *(include passengers and crew)*

51. Is a Rail Equipment Accident / Incident Report Being Filed 1. Yes 2. No — Code: 2

53a. Special Study Block | 53b. Special Study Block

54. Narrative Description

55. Typed Name and Title | 56. Signature | 57. Date

FORM FRA F 6180.57

* NOTE THAT ALL CASUALTIES MUST BE REPORTED ON FORM FRA F 6180.55A

Ohio Rail Development Commission
1980 W. Broad Street, 2nd Floor
Columbus, OH 43223

Diagnostic Review Team Survey

Date: 9-23-11

Location Data

Street or Road Name: E Maple Ave.

Route/Road Number (i.e. Twp., Co., SR or US):

AAR-DOT No.: 524653A

County: Montgomery

Township:

City: (In or Near) Miamisburg

Railroad Name: Norfolk Southern (NS)

Railroad Division: Dearborn

Branch/Line Name: Cincinnati LI

Nearest RR Timetable Station: Miamisburg

RR Milepost: 218.2

On-Site Review Team

(Include: Name – Organization – Phone Number)

1. TIM PERKINS ORDC 614-644-0284
2. Matt Malich ORDC 614-387-5162
3. GEORGE MARTIN PUCO 614-752-9107
4. DAVE BOWLIN CITY OF MIAMISBURG 937-847-6639
5. Derrick Dolan NS 304-712-0220
6. BOB STANLEY CITY OF MIAMISBURG 937 847 6531
7.
8.
9.
10.
11.
12.
13.

Existing Traffic Control Devices

Type of Warning Devices	Installed?		Quantity/Comments
Advance Warning Signs	☑ Yes	☐ No	One way
'Stop' Signs	☐ Yes	☑ No	
'Stop Ahead' Signs	☐ Yes	☑ No	
Pavement Markings	☑ Yes	☐ No	One way
Crossbucks	☐ Yes	☐ No	
Number of Tracks Signs	☐ Yes	☑ No	
Inventory Tags	☑ Yes	☐ No	
Interconnected Highway Traffic Signal	☐ Yes	☑ No	
Mast-Mounted Flashing Lights	☑ Yes	☐ No	
Cantilever Flashing Lights	☐ Yes	☑ No	Number: Length:
Side Lights	☐ Yes	☐ No	
Automatic Gates	☑ Yes	☐ No	Number: 1 Length:
Bells	☑ Yes	☐ No	

UPDATED (12/2006)

Sidewalk Gate Arms	☐ Yes ☑ No	
'No Turn' Signs	☐ Yes ☑ No	
Illumination	☐ Yes ☑ No	
Is crossing flagged by train crew?	☐ Yes ☑ No	
Other	☐ Yes ☑ No	

Safety Data (Obtain crash reports, if possible, prior to review)

	Initial Information (from database)	Revised
Number & dates of crashes in previous 5 years	0	
Hazard Ranking	3057 Date Run: 8/19/2011	

Railroad Data

Railroad Characteristics	Initial Information (from database)	Revised
Total trains per day	18	
< 1 per day		
Day thru trains	6	
Night thru trains	10	
Daytime switching movements	2	
Nighttime switching movements	0	
Total number of tracks	2	
Number of main tracks	2	
Number of other tracks	0	
Maximum train speed	45	
Typical train speed		
Amtrak		

If non-gated crossing, is clearing sight distance adequate in all quadrants? (See Table 1) ☐ Yes ☐ No

If multiple tracks, can two trains occupy crossing at the same time? ☑ Yes ☐ No

Can one train block the motorists' view of another train at crossing? ☑ Yes (Explain below) ☐ No

Are there other track(s) crossing this same roadway within 100 ft of this crossing? ☐ Yes ☑ No

If yes, Crossing DOT #(if different) _____

If yes, distance _____ (take measurement between track centerlines at closest point along roadway)

Roadway Data

Local Highway Authority: City of Miamisburg

Roadway Characteristics	Initial Information (from database)	Revised
Average daily traffic	760	
Highway paved	☒ Yes ☐ No	☐ Yes ☐ No

Roadway Surface: ☒ Blacktop ☐ Gravel ☐ Concrete ☐ Other _____

Roadway width: _____ft. West approach 31 ft East side

Number of highway lanes	1	
Urban or Rural	Urban	
Vehicle Speed: 25 MPH		

School Bus Operation: ☐ No ☑ Yes _____ Amount

Hazardous Materials Trucks: ☑ No ☐ Yes _____ Amount

Shoulders: ☑ No ☐ Yes

Is the shoulder surfaced? ☑ No ☐ Yes

Is there existing guardrail along roadway in crossing vicinity? ☑ No ☐ Yes

Is stopping site distance adequate? (See Table 2) ☑ Yes ☐ No If no, deficient approach(es) _____

Quadrant NE Curb and Gutter:	Quadrant SW Curb and Gutter:
☐ Functional (Curb height = 4" or more)	☐ Functional (Curb height = 4" or more)
☐ Non-functional (Curb height = Less than 4")	☐ Non-functional (Curb height = Less than 4")
☐ None	☐ None

Pedestrians: ☐ No ☑ Yes

Is sidewalk present? ☐ No ☑ Yes

Is there a nearby intersection that could cause queuing over the crossing? ☑ No ☐ Yes

If yes,

Distance _____

Is this intersection signalized? ☑ No ☐ Yes

Are the signals currently interconnected with the existing crossing warning devices? ☑ No ☐ Yes

Is it the consensus of the Diagnostic Review Team that this is a potential closure project: ☐ No ☐ Yes

Explain reasons:

Type of Development

☐ Open Space	☐ Institutional	Location of nearby schools:
☐ Industrial	☑ Commercial	
☑ Residential		

Utility Information

Is commercial power available? ☐ No ☑ Yes

Utility Provider (Company Name) Dayton P+L Phone Number _____

Nearest Available Power Source _____

What other utilities are present? _____

Is there potential utility conflict(s) ☐ Yes ☐ No ☐ Unknown

Diagnostic Team Recommendations

	Quadrants Needed
☐ Install/upgrade active devices	
☐ Automatic Flashing Lights (AFLS)	
☐ AFLS /Cants	
☐ AFLS / Gates	
☐ AFLS / Gates / Cants	
☐ Upgrade circuitry	
☐ Sidelights	
☐ Guardrail Needed	
☐ Install/Replace curb	
☐ Other (define)	

Comments: New lights + gates but no relocation

☐ Install/upgrade traffic signal preemption	
☐ No improvements needed	

☐ Other (define)	

Acknowledgement of Recommendations (each entity represented at the diagnostic must have at least one signature acknowledgement):

Dave Bowlin

Field Dimensions

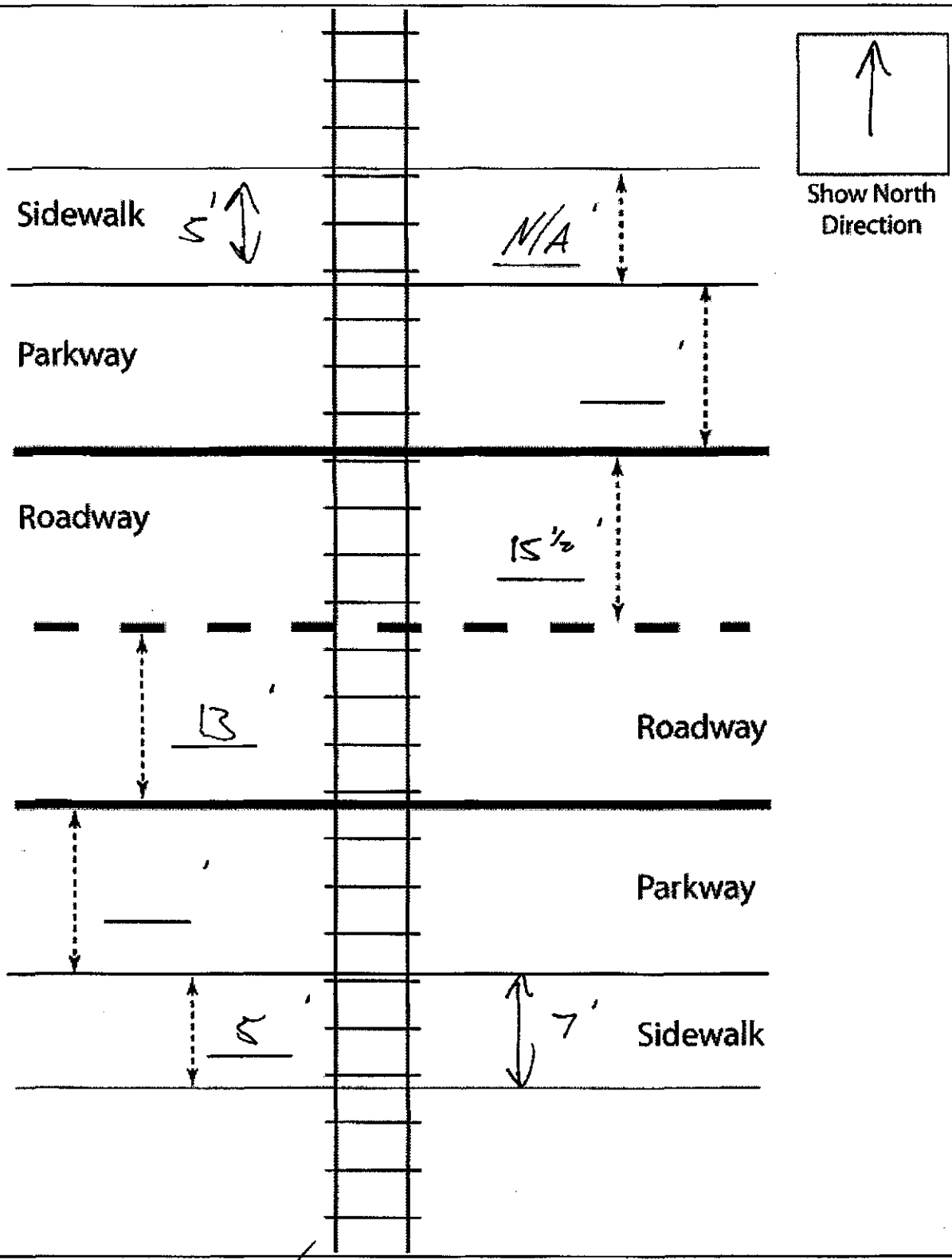

Crossing Angle ☐ 0-29° ☐ 30-59° ☒ 60-90° Measured in _____ Quadrant?

Measurements by: TP

UPDATED (12/2006)

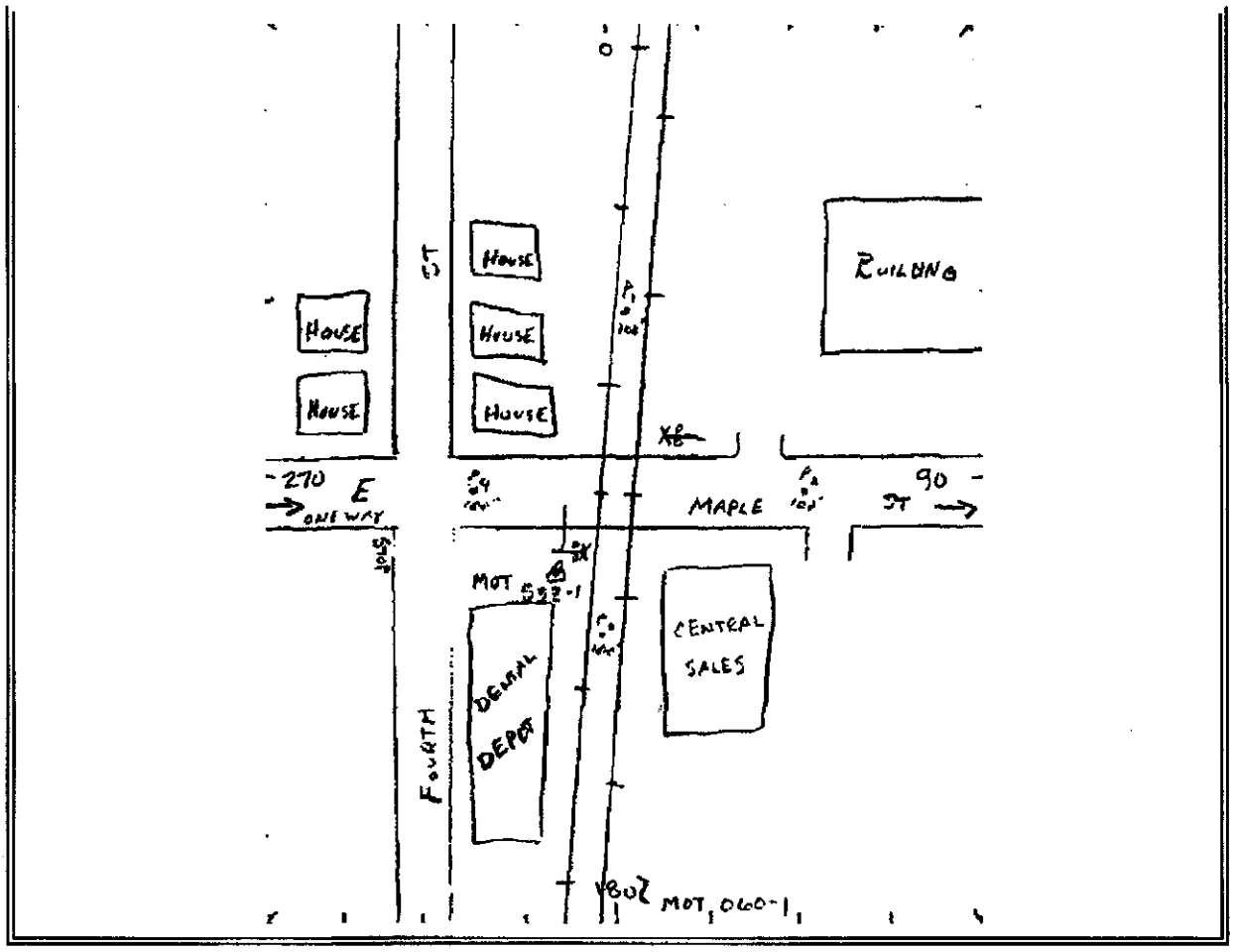
HOUSE
HOUSE
HOUSE
HOUSE
HOUSE
BUILDING
ST
270 E
ONE WAY
MAPLE
90
ST
MOT 522-1
CENTRAL SALES
DENAL DEPOT
FOURTH
MOT 060-1

Back to Top

Field Sketch

Crossing Angle ☐ 0-29° ☐ 30-59° ☐ 60-90° Measured in _____ Quadrant?

Sketch by: _____

TABLE 1

Clearing Sight Distances

Maximum Authorized Train Speed	Distance (dT) Along Railroad from Crossing (ft)
1 - 10	240
15	360
20	480
25	600
30	720
35	840
40	960
45	1080
50	1200
55	1320
60	1440
65	1560
70	1680
75	1800
80	1920
85	2040
90	2160

Source: R-H Grade Crossing Handbook Table 36 (pp. 132-133)

Notes:

All calculated distances are rounded up to the next higher 5-foot increment.

Distances indicated are for 65-ft double bottom semi-tractor trailers and level single track 90 degree crossings; and may need to be adjusted for multiple tracks, skewed crossings or approaches on grades.

Clearing Sight Distance is to be measured in each vehicle travel direction at non-gated crossings as viewed from a point 25 feet from centerline of nearest track in the center of whichever travel lane is nearest the direction along track being measured.

Table 2

Stopping Sight Distances

Highway Vehicle Speed	Distance (dH) Along Roadway from Crossing (ft)
0	n/a
5	50
10	70
15	105
20	135
25	180
30	225
35	280
40	340
45	410
50	490
55	570
60	660
65	760
70	865

Source: R-H Grade Crossing Handbook Table 36 (pp. 132-133)

Notes:

All calculated distances are rounded up to the next higher 5-foot increment.

Distances indicated are for 65-ft double bottom semi-tractor trailers on dry level pavements.

Stopping Sight Distance is to be measured on each roadway approach to crossing from stop bar.

DEPARTMENT OF TRANSPORTATION
FEDERAL RAILROAD ADMINISTRATION (FRA)

HIGHWAY-RAIL GRADE CROSSING ACCIDENT/INCIDENT REPORT

OMB Approval No. 2130-0500

Name Of		Alphabetic Code	RR Accident/Incident No.
1. Reporting Railroad	Consolidated Rail Corp. [CR]	1a. CR	1b. 0830300
2. Other Railroad Involved in Train Accident/Incident		2a.	2b.
3. Railroad Responsible for Track Maintenance	Consolidated Rail Corp. [CR]	3a. CR	3b. 0830300

4. U.S. DOT-AAR Grade Crossing ID No.	5. Date of Accident/Incident	6. Time of Accident/Incident
524653A	08/02/89	04:40 PM

7. Nearest Railroad Station	8. Division	9. County	10. State Abbr.	Code
MIAMISBURG		MONTGOMERY	39	OH

11. City *(if in a city)* MIAMISBURG | 12. Highway Name or No. MAPLE STREET | ☑ Public ☐ Private

Highway User Involved

13. Type — A. Auto, B. Truck, C. Truck-trailer, D. Pick-up truck, E. Van, F. Bus, G. School Bus, H. Motorcycle, J. Other Motor Vehicle, K. Pedestrian, M. Other *(specify)* — Code: A

14. Vehicle Speed *(est. mph at impact)*: 30

15. Direction *(geographical)* — 1. North 2. South 3. East 4. West — Code: 3

16. Position — 1. Stalled on crossing 2. Stopped on Crossing 3. Moving over crossing 4. Trapped — Code: 3

20a. Was the highway user and/or rail equipment involved in the impact transporting hazardous materials? — 1. Highway User 2. Rail Equipment 3. Both 4. Neither — Code: 4

Rail Equipment Involved

17. Equipment — 1. Train *(units pulling)* 2. Train *(units pushing)* 3. Train *(standing)* 4. Car(s) *(moving)* 5. Car(s) *(standing)* 6. Light loco(s) *(moving)* 7. Light loco(s) *(standing)* 8. Other *(specify)* A. Train pulling- RCL B. Train pushing- RCL C. Train standing- RCL — Code: 1

18. Position of Car Unit in Train: 1

19. Circumstance — 1. Rail equipment struck highway user 2. Rail equipment struck by highway user — Code: 2

20b. Was there a hazardous materials release by — 1. Highway User 2. Rail Equipment 3. Both 4. Neither — Code:

20c. State the name and quantity of the hazardous materials released, if any

21. Temperature *(specify if minus)*: 88 °F

22. Visibility *(single entry)* — 1. Dawn 2. Day 3. Dusk 4. Dark — Code: 2

23. Weather *(single entry)* — 1. Clear 2. Cloudy 3. Rain 4. Fog 5. Sleet 6. Snow — Code: 1

24. Type of Equipment Consist *(single entry)* — 1. Freight train 2. Passenger train 3. Commuter train 4. Work train 5. Single car 6. Cut of cars 7. Yard/Switching 8. Light loco(s) 9. Main./inspect. car A. Spec. MoW Equip — Code: 1

25. Track Type Used by Rail Equipment Involved — 1. Main 2. Yard 3. Siding 4. Industry — Code: 1

26. Track Number or Name: #1 MAIN TRACK

27. FRA Track Class: 4

28. Number of Locomotive Units: 1

29. Number of Cars: 5

30. Consist Speed *(Recorded if available)* — R. Recorded E. Estimated — 40 mph — Code: E

31. Time Table Direction — 1. North 2. South 3. East 4. West — Code: 4

32. Type of Crossing Warning — 1. Gates 2. Cantilever FLS 3. Standard FLS 4. Wig wags 5. Hwy. traffic signals 6. Audible 7. Crossbucks 8. Stop signs 9. Watchman 10. Flagged by crew 11. Other *(specify)* 12. None

Code(s)	03	11					

33. Signaled Crossing Warning: 20 sec warn min (1);

34. Whistle Ban — 1. Yes 2. No 3. Unknown — Code:

35. Location of Warning — 1. Both Sides 2. Side of Vehicle Approach 3. Opposite Side of Vehicle Approach — Code: 1

36. Crossing Warning Interconnected with Highway Signals — 1. Yes 2. No 3. Unknown — Code: 2

37. Crossing Illuminated by Street Lights or Special Lights — 1. Yes 2. No 3. Unknown — Code: 2

38. Driver's Age

39. Driver's Gender — 1. Male 2. Female — Code:

40. Driver Drove Behind or in Front of Train and Struck or was Struck by Second Train — 1. Yes 2. No 3. Unknown — Code: 2

41. Driver — 1. Drove around or thru the gate 2. Stopped and then proceeded 3. Did not stop 4. Stopped on crossing 5. Other *(specify)* — Code: 3

42. Driver Passed Standing Highway Vehicle — 1. Yes 2. No 3. Unknown — Code: 2

43. View of Track Obscured by *(primary obstruction)* — 1. Permanent Structure 2. Standing railroad equipment 3. Passing Train 4. Topography 5. Vegetation 6. Highway Vehicles 7. Other *(specify)* 8. Not Obstructed — Code: 1

Casualties to:	Killed	Injured
46. Highway-Rail Crossing Users	0	0
49. Railroad Employees	0	0
52. Passengers on Train	0	0

44. Driver was — 1. Killed 2. Injured 3. Uninjured — Code: 3

45. Was Driver in the Vehicle? — 1. Yes 2. No — Code: 1

47. Highway Vehicle Property Damage *(est. dollar damage)*: $800

48. Total Number of Highway-Rail Crossing Users *(include driver)*: 1

50. Total Number of People on Train *(include passengers and crew)*:

51. Is a Rail Equipment Accident / Incident Report Being Filed — 1. Yes 2. No — Code: 2

53a. Special Study Block | 53b. Special Study Block

54. Narrative Description

55. Typed Name and Title | 56. Signature | 57. Date

FORM FRA F 6180.57

* NOTE THAT ALL CASUALTIES MUST BE REPORTED ON FORM FRA F 6180.55A

DEPARTMENT OF TRANSPORTATION
FEDERAL RAILROAD ADMINISTRATION (FRA)

HIGHWAY-RAIL GRADE CROSSING ACCIDENT/INCIDENT REPORT

OMB Approval No. 2130-0500

Name Of		Alphabetic Code	RR Accident/Incident No.
1. Reporting Railroad	Consolidated Rail Corp. [CR]	1a. CR	1b. 0820304
2. Other Railroad Involved in Train Accident/Incident		2a.	2b.
3. Railroad Responsible for Track Maintenance	Consolidated Rail Corp. [CR]	3a. CR	3b. 0820304

4. U.S. DOT-AAR Grade Crossing ID No.	5. Date of Accident/Incident	6. Time of Accident/Incident
524653A	02/06/77	09:25 AM

7. Nearest Railroad Station	8. Division	9. County	10. State Abbr.	Code
MIAMISBURG		MONTGOMERY	39	OH

11. City *(if in a city)* MIAMISBURG | 12. Highway Name or No. MAPLE STREET | ☑ Public ☐ Private

Highway User Involved

13. Type — A. Auto, B. Truck, C. Truck-trailer, D. Pick-up truck, E. Van, F. Bus, G. School Bus, H. Motorcycle, J. Other Motor Vehicle, K. Pedestrian, M. Other *(specify)* — Code: A

14. Vehicle Speed *(est. mph at impact)*

15. Direction *(geographical)* 1. North 2. South 3. East 4. West — Code: 3

16. Position 1. Stalled on crossing 2. Stopped on Crossing 3. Moving over crossing 4. Trapped — Code: 3

20a. Was the highway user and/or rail equipment involved in the impact transporting hazardous materials? 1. Highway User 2. Rail Equipment 3. Both 4. Neither — Code: 4

Rail Equipment Involved

17. Equipment 1. Train *(units pulling)* 2. Train *(units pushing)* 3. Train *(standing)* 4. Car(s) *(moving)* 5. Car(s) *(standing)* 6. Light loco(s) *(moving)* 7. Light loco(s) *(standing)* 8. Other *(specify)* A. Train pulling- RCL B. Train pushing- RCL C. Train standing- RCL — Code: 1

18. Position of Car Unit in Train: 1

19. Circumstance 1. Rail equipment struck highway user 2. Rail equipment struck by highway user — Code: 1

20b. Was there a hazardous materials release by 1. Highway User 2. Rail Equipment 3. Both 4. Neither — Code:

20c. State the name and quantity of the hazardous materials released, if any

21. Temperature *(specify if minus)* 8 °F

22. Visibility *(single entry)* 1. Dawn 2. Day 3. Dusk 4. Dark — Code: 2

23. Weather *(single entry)* 1. Clear 2. Cloudy 3. Rain 4. Fog 5. Sleet 6. Snow — Code: 2

24. Type of Equipment Consist *(single entry)* 1. Freight train 2. Passenger train 3. Commuter train 4. Work train 5. Single car 6. Cut of cars 7. Yard/Switching 8. Light loco(s) 9. Main./inspect. car A. Spec. MoW Equip — Code: 1

25. Track Type Used by Rail Equipment Involved 1. Main 2. Yard 3. Siding 4. Industry — Code: 1

26. Track Number or Name: NO 2 WESTBOUND MAIN

27. FRA Track Class	28. Number of Locomotive Units	29. Number of Cars	30. Consist Speed *(Recorded if available)* R. Recorded E. Estimated	Code	31. Time Table Direction 1. North 2. South 3. East 4. West	Code
4	2	77	20 mph	E		4

32. Type of Crossing Warning 1. Gates 2. Cantilever FLS 3. Standard FLS 4. Wig wags 5. Hwy. traffic signals 6. Audible 7. Crossbucks 8. Stop signs 9. Watchman 10. Flagged by crew 11. Other *(specify)* 12. None

Code(s): 03

33. Signaled Crossing Warning: 20 sec warn min (1);

34. Whistle Ban 1. Yes 2. No 3. Unknown — Code:

35. Location of Warning 1. Both Sides 2. Side of Vehicle Approach 3. Opposite Side of Vehicle Approach — Code: 1

36. Crossing Warning Interconnected with Highway Signals 1. Yes 2. No 3. Unknown — Code: 2

37. Crossing Illuminated by Street Lights or Special Lights 1. Yes 2. No 3. Unknown — Code:

38. Driver's Age

39. Driver's Gender 1. Male 2. Female — Code:

40. Driver Drove Behind or in Front of Train and Struck or was Struck by Second Train 1. Yes 2. No 3. Unknown — Code: 2

41. Driver 1. Drove around or thru the gate 2. Stopped and then proceeded 3. Did not stop 4. Stopped on crossing 5. Other *(specify)* — Code: 3

42. Driver Passed Standing Highway Vehicle 1. Yes 2. No 3. Unknown — Code: 3

43. View of Track Obscured by *(primary obstruction)* 1. Permanent Structure 2. Standing railroad equipment 3. Passing Train 4. Topography 5. Vegetation 6. Highway Vehicles 7. Other *(specify)* 8. Not Obstructed — Code: 8

Casualties to:	Killed	Injured
46. Highway-Rail Crossing Users	0	1
49. Railroad Employees	0	0
52. Passengers on Train	0	0

44. Driver was 1. Killed 2. Injured 3. Uninjured — Code: 2

45. Was Driver in the Vehicle? 1. Yes 2. No — Code: 1

47. Highway Vehicle Property Damage *(est. dollar damage)* $0

48. Total Number of Highway-Rail Crossing Users *(include driver)* 1

50. Total Number of People on Train *(include passengers and crew)*

51. Is a Rail Equipment Accident / Incident Report Being Filed 1. Yes 2. No — Code: 2

53a. Special Study Block | 53b. Special Study Block

54. Narrative Description

55. Typed Name and Title | 56. Signature | 57. Date

FORM FRA F 6180.57

* NOTE THAT ALL CASUALTIES MUST BE REPORTED ON FORM FRA F 6180.55A

DEPARTMENT OF TRANSPORTATION
FEDERAL RAILROAD ADMINISTRATION (FRA)

HIGHWAY-RAIL GRADE CROSSING ACCIDENT/INCIDENT REPORT

OMB Approval No. 2130-0500

Name Of		Alphabetic Code	RR Accident/Incident No.
1. Reporting Railroad	Consolidated Rail Corp. [CR]	1a. CR	1b. 0820302
2. Other Railroad Involved in Train Accident/Incident		2a.	2b.
3. Railroad Responsible for Track Maintenance		3a.	3b.

4. U.S. DOT-AAR Grade Crossing ID No.	5. Date of Accident/Incident	6. Time of Accident/Incident
524653A	10/09/76	05:31 PM

7. Nearest Railroad Station	8. Division	9. County	10. State Abbr.	Code
MIAMISBURG		MONTGOMERY	39	OH

11. City *(if in a city)* MIAMISBURG | 12. Highway Name or No. MAPLE STREET | ☑ Public ☐ Private

Highway User Involved

13. Type — A. Auto, B. Truck, C. Truck-trailer, D. Pick-up truck, E. Van, F. Bus, G. School Bus, H. Motorcycle, J. Other Motor Vehicle, K. Pedestrian, M. Other *(specify)* — Code: A

14. Vehicle Speed *(est. mph at impact)*: 0

15. Direction *(geographical)* — 1. North 2. South 3. East 4. West — Code: 4

16. Position — 1. Stalled on crossing 2. Stopped on Crossing 3. Moving over crossing 4. Trapped — Code: 1

20a. Was the highway user and/or rail equipment involved in the impact transporting hazardous materials? — 1. Highway User 2. Rail Equipment 3. Both 4. Neither — Code: 2

Rail Equipment Involved

17. Equipment — 1. Train *(units pulling)* 2. Train *(units pushing)* 3. Train *(standing)* 4. Car(s) *(moving)* 5. Car(s) *(standing)* 6. Light loco(s) *(moving)* 7. Light loco(s) *(standing)* 8. Other *(specify)* A. Train pulling- RCL B. Train pushing- RCL C. Train standing- RCL — Code: 1

18. Position of Car Unit in Train: 1

19. Circumstance — 1. Rail equipment struck highway user 2. Rail equipment struck by highway user — Code: 1

20b. Was there a hazardous materials release by — 1. Highway User 2. Rail Equipment 3. Both 4. Neither — Code:

20c. State the name and quantity of the hazardous materials released, if any

21. Temperature *(specify if minus)*: 52 °F

22. Visibility *(single entry)* — 1. Dawn 2. Day 3. Dusk 4. Dark — Code: 2

23. Weather *(single entry)* — 1. Clear 2. Cloudy 3. Rain 4. Fog 5. Sleet 6. Snow — Code: 1

24. Type of Equipment Consist *(single entry)* — 1. Freight train 2. Passenger train 3. Commuter train 4. Work train 5. Single car 6. Cut of cars 7. Yard/Switching 8. Light loco(s) 9. Main./inspect. car A. Spec. MoW Equip — Code: 1

25. Track Type Used by Rail Equipment Involved — 1. Main 2. Yard 3. Siding 4. Industry — Code: 1

26. Track Number or Name: 2

27. FRA Track Class: 4

28. Number of Locomotive Units: 3

29. Number of Cars: 79

30. Consist Speed *(Recorded if available)* — R. Recorded E. Estimated 20 mph — Code: E

31. Time Table Direction — 1. North 2. South 3. East 4. West — Code: 4

32. Type of Crossing Warning — 1. Gates 2. Cantilever FLS 3. Standard FLS 4. Wig wags 5. Hwy. traffic signals 6. Audible 7. Crossbucks 8. Stop signs 9. Watchman 10. Flagged by crew 11. Other *(specify)* 12. None

Code(s): 03

33. Signaled Crossing Warning: 20 sec warn min (1);

34. Whistle Ban — 1. Yes 2. No 3. Unknown — Code:

35. Location of Warning — 1. Both Sides 2. Side of Vehicle Approach 3. Opposite Side of Vehicle Approach — Code: 1

36. Crossing Warning Interconnected with Highway Signals — 1. Yes 2. No 3. Unknown — Code: 2

37. Crossing Illuminated by Street Lights or Special Lights — 1. Yes 2. No 3. Unknown — Code:

38. Driver's Age

39. Driver's Gender — 1. Male 2. Female — Code:

40. Driver Drove Behind or in Front of Train and Struck or was Struck by Second Train — 1. Yes 2. No 3. Unknown — Code: 2

41. Driver — 1. Drove around or thru the gate 2. Stopped and then proceeded 3. Did not stop 4. Stopped on crossing 5. Other *(specify)* — Code: 4

42. Driver Passed Standing Highway Vehicle — 1. Yes 2. No 3. Unknown — Code: 3

43. View of Track Obscured by *(primary obstruction)* — 1. Permanent Structure 2. Standing railroad equipment 3. Passing Train 4. Topography 5. Vegetation 6. Highway Vehicles 7. Other *(specify)* 8. Not Obstructed — Code: 8

Casualties to:	Killed	Injured
46. Highway-Rail Crossing Users	0	0
49. Railroad Employees	0	0
52. Passengers on Train	0	0

44. Driver was — 1. Killed 2. Injured 3. Uninjured — Code: 3

45. Was Driver in the Vehicle? — 1. Yes 2. No — Code: 2

47. Highway Vehicle Property Damage *(est. dollar damage)*: $750

48. Total Number of Highway-Rail Crossing Users *(include driver)*: 0

50. Total Number of People on Train *(include passengers and crew)*:

51. Is a Rail Equipment Accident / Incident Report Being Filed — 1. Yes 2. No — Code: 2

53a. Special Study Block | 53b. Special Study Block

54. Narrative Description

55. Typed Name and Title | 56. Signature | 57. Date

FORM FRA F 6180.57

* NOTE THAT ALL CASUALTIES MUST BE REPORTED ON FORM FRA F 6180.55A

DEPARTMENT OF TRANSPORTATION
FEDERAL RAILROAD ADMINISTRATION (FRA)

HIGHWAY-RAIL GRADE CROSSING ACCIDENT/INCIDENT REPORT

OMB Approval No. 2130-0500

Name Of		Alphabetic Code	RR Accident/Incident No.
1. Reporting Railroad	Penn Central Transportation Co. [PC]	1a. PC	1b. 0820311
2. Other Railroad Involved in Train Accident/Incident		2a.	2b.
3. Railroad Responsible for Track Maintenance		3a.	3b.

4. U.S. DOT-AAR Grade Crossing ID No.	5. Date of Accident/Incident	6. Time of Accident/Incident
524653A	02/14/75	07:20 PM

7. Nearest Railroad Station	8. Division	9. County	10. State Abbr.	Code
MORAINE		MONTGOMERY	39	OH

11. City *(if in a city)* MIAMISBURG | 12. Highway Name or No. MAPLE STREET | ☑ Public ☐ Private

Highway User Involved

13. Type — A. Auto, B. Truck, C. Truck-trailer, D. Pick-up truck, E. Van, F. Bus, G. School Bus, H. Motorcycle, J. Other Motor Vehicle, K. Pedestrian, M. Other *(specify)* — Code: A

14. Vehicle Speed *(est. mph at impact)*: 25

15. Direction *(geographical)* — 1. North 2. South 3. East 4. West — Code: 2

16. Position — 1. Stalled on crossing 2. Stopped on Crossing 3. Moving over crossing 4. Trapped — Code: 3

20a. Was the highway user and/or rail equipment involved in the impact transporting hazardous materials? — 1. Highway User 2. Rail Equipment 3. Both 4. Neither — Code: 4

Rail Equipment Involved

17. Equipment — 1. Train *(units pulling)* 2. Train *(units pushing)* 3. Train *(standing)* 4. Car(s) *(moving)* 5. Car(s) *(standing)* 6. Light loco(s) *(moving)* 7. Light loco(s) *(standing)* 8. Other *(specify)* A. Train pulling- RCL B. Train pushing- RCL C. Train standing- RCL — Code: 1

18. Position of Car Unit in Train: 1

19. Circumstance — 1. Rail equipment struck highway user 2. Rail equipment struck by highway user — Code: 1

20b. Was there a hazardous materials release by — 1. Highway User 2. Rail Equipment 3. Both 4. Neither — Code:

20c. State the name and quantity of the hazardous materials released, if any

21. Temperature *(specify if minus)*: 30 °F

22. Visibility *(single entry)* — 1. Dawn 2. Day 3. Dusk 4. Dark — Code: 4

23. Weather *(single entry)* — 1. Clear 2. Cloudy 3. Rain 4. Fog 5. Sleet 6. Snow — Code: 2

24. Type of Equipment Consist *(single entry)* — 1. Freight train 2. Passenger train 3. Commuter train 4. Work train 5. Single car 6. Cut of cars 7. Yard/Switching 8. Light loco(s) 9. Main./inspect. car A. Spec. MoW Equip — Code: 1

25. Track Type Used by Rail Equipment Involved — 1. Main 2. Yard 3. Siding 4. Industry — Code: 1

26. Track Number or Name: WESTBOUND MAIN

27. FRA Track Class: 2

28. Number of Locomotive Units: 3

29. Number of Cars: 46

30. Consist Speed *(Recorded if available)* — R. Recorded E. Estimated — 10 mph — Code: E

31. Time Table Direction — 1. North 2. South 3. East 4. West — Code: 4

32. Type of Crossing Warning — 1. Gates 2. Cantilever FLS 3. Standard FLS 4. Wig wags 5. Hwy. traffic signals 6. Audible 7. Crossbucks 8. Stop signs 9. Watchman 10. Flagged by crew 11. Other *(specify)* 12. None

Code(s): 03

33. Signaled Crossing Warning: 20 sec warn min (1);

34. Whistle Ban — 1. Yes 2. No 3. Unknown — Code:

35. Location of Warning — 1. Both Sides 2. Side of Vehicle Approach 3. Opposite Side of Vehicle Approach — Code: 1

36. Crossing Warning Interconnected with Highway Signals — 1. Yes 2. No 3. Unknown — Code: 2

37. Crossing Illuminated by Street Lights or Special Lights — 1. Yes 2. No 3. Unknown — Code: 1

38. Driver's Age

39. Driver's Gender — 1. Male 2. Female — Code:

40. Driver Drove Behind or In Front of Train and Struck or was Struck by Second Train — 1. Yes 2. No 3. Unknown — Code: 2

41. Driver — 1. Drove around or thru the gate 2. Stopped and then proceeded 3. Did not stop 4. Stopped on crossing 5. Other *(specify)* — Code: 3

42. Driver Passed Standing Highway Vehicle — 1. Yes 2. No 3. Unknown — Code: 3

43. View of Track Obscured by *(primary obstruction)* — 1. Permanent Structure 2. Standing railroad equipment 3. Passing Train 4. Topography 5. Vegetation 6. Highway Vehicles 7. Other *(specify)* 8. Not Obstructed — Code: 8

Casualties to:	Killed	Injured
46. Highway-Rail Crossing Users	0	2
49. Railroad Employees	0	0
52. Passengers on Train	0	0

44. Driver was — 1. Killed 2. Injured 3. Uninjured — Code: 2

45. Was Driver in the Vehicle? — 1. Yes 2. No — Code: 1

47. Highway Vehicle Property Damage *(est. dollar damage)*: $1,500

48. Total Number of Highway-Rail Crossing Users *(include driver)*: 2

50. Total Number of People on Train *(include passengers and crew)*:

51. Is a Rail Equipment Accident / Incident Report Being Filed — 1. Yes 2. No — Code: 2

53a. Special Study Block | 53b. Special Study Block

54. Narrative Description

55. Typed Name and Title | 56. Signature | 57. Date

FORM FRA F 6180.57

* NOTE THAT ALL CASUALTIES MUST BE REPORTED ON FORM FRA F 6180.55A

Ohio Rail Development Commission
1980 W. Broad Street, 2nd Floor
Columbus, OH 43223

Diagnostic Review Team Survey

Date: 9.23.11

Location Data

Street or Road Name: Linden Ave.

Route/Road Number (i.e. Twp., Co., SR or US):

AAR-DOT No.: 524657C

County: Montgomery

Township:

City (In or Near): Miamisburg

Railroad Name: Norfolk Southern (NS)

Railroad Division: Dearborn

Branch/Line Name: Cincinnati LI

Nearest RR Timetable Station: Miamisburg

RR Milepost: 218.45

On-Site Review Team

(Include: Name – Organization – Phone Number)

1. TIM PERKINS ORDC 614.644.0284
2. Matt Malich ORDC 614-387-5162
3. GEORGE MARTIN DUCO 614-752-9107
4. Derrick Rowe NS 304-712-0228
5. DAVE BOWLIN CITY OF MIAMISBURG 937-847-6659
6. BOB STANLEY CITY OF MIAMISBURG 937 847 6531
7.
8.
9.
10.
11.
12.
13.

Existing Traffic Control Devices

Type of Warning Devices	Installed?		Quantity/Comments
Advance Warning Signs	☑ Yes	☐ No	
'Stop' Signs	☐ Yes	☑ No	
'Stop Ahead' Signs	☐ Yes	☑ No	
Pavement Markings	☑ Yes	☐ No	
Crossbucks	☐ Yes	☐ No	
Number of Tracks Signs	☐ Yes	☑ No	
Inventory Tags	☑ Yes	☐ No	
Interconnected Highway Traffic Signal	☐ Yes	☑ No	
Mast-Mounted Flashing Lights	☑ Yes	☐ No	
Cantilever Flashing Lights	☐ Yes	☑ No	Number: Length:
Side Lights	☐ Yes	☑ No	
Automatic Gates	☑ Yes	☐ No	Number: Length:
Bells	☑ Yes	☐ No	

Sidewalk Gate Arms	☐ Yes ☑ No	
'No Turn' Signs	☐ Yes ☑ No	
Illumination	☑ Yes ☐ No	
Is crossing flagged by train crew?	☐ Yes ☑ No	
Other	☐ Yes ☑ No	

Safety Data (Obtain crash reports, if possible, prior to review)

	Initial Information (from database)	Revised
Number & dates of crashes in previous 5 years	0	
Hazard Ranking	1142 Date Run: 8/19/2011	

Railroad Data

Railroad Characteristics	Initial Information (from database)	Revised
Total trains per day	18	
< 1 per day		
Day thru trains	6	
Night thru trains	10	
Daytime switching movements	2	
Nighttime switching movements	0	
Total number of tracks	2	
Number of main tracks	2	
Number of other tracks	0	
Maximum train speed		
Typical train speed		
Amtrak		

If non-gated crossing, is clearing sight distance adequate in all quadrants? (See Table 1) ☐ Yes ☐ No

If multiple tracks, can two trains occupy crossing at the same time? ☑ Yes ☐ No

Can one train block the motorists' view of another train at crossing? ☑ Yes (Explain below) ☐ No

Are there other track(s) crossing this same roadway within 100 ft of this crossing? ☐ Yes ☑ No

If yes, Crossing DOT #(if different) _____

If yes, distance _____ (take measurement between track centerlines at closest point along roadway)

Roadway Data

Local Highway Authority: City of Miamisburg

Roadway Characteristics	Initial Information (from database)	Revised
Average daily traffic	6230	
Highway paved	☒ Yes ☐ No	☐ Yes ☐ No

Roadway Surface: ☒ Blacktop ☐ Gravel ☐ Concrete ☐ Other _____

Roadway width: 32 ft. WEST 33 ft East Approach

Number of highway lanes	2	
Urban or Rural	Urban	
Vehicle Speed: 25 MPH		

School Bus Operation: ☐ No ☑ Yes _____ Amount

Hazardous Materials Trucks: ☑ No ☐ Yes _____ Amount

Shoulders: ☐ No ☑ Yes

Is the shoulder surfaced? ☑ No ☐ Yes

Is there existing guardrail along roadway in crossing vicinity? ☑ No ☐ Yes

Is stopping site distance adequate? (See Table 2) ☑ Yes ☐ No If no, deficient approach(es) _____

Quadrant NE Curb and Gutter:	Quadrant SW Curb and Gutter:
☐ Functional (Curb height = 4" or more)	☐ Functional (Curb height = 4" or more)
☐ Non-functional (Curb height = Less than 4")	☐ Non-functional (Curb height = Less than 4")
☑ None	☑ None

Pedestrians: ☐ No ☑ Yes

Is sidewalk present? ☐ No ☑ Yes

Is there a nearby intersection that could cause queuing over the crossing? ☑ No ☐ Yes

If yes,

Distance _____

Is this intersection signalized? ☑ No ☐ Yes

Are the signals currently interconnected with the existing crossing warning devices? ☑ No ☐ Yes

Is it the consensus of the Diagnostic Review Team that this is a potential closure project: ☑ No ☐ Yes

Explain reasons:

Type of Development

☐ Open Space ☐ Institutional

☐ Industrial ☑ Commercial

☑ Residential

Location of nearby schools:

Utility Information

Is commercial power available? ☐ No ☑ Yes

Utility Provider (Company Name) Dayton P&L Phone Number _____

Nearest Available Power Source _____

What other utilities are present? _____

Is there potential utility conflict(s) ☐ Yes ☐ No ☐ Unknown

Diagnostic Team Recommendations

	Quadrants Needed
☐ Install/upgrade active devices	
☐ Automatic Flashing Lights (AFLS)	
☐ AFLS /Cants	
☐ AFLS / Gates	
☐ AFLS / Gates / Cants	
☐ Upgrade circuitry	
☐ Sidelights	
☐ Guardrail Needed	
☐ Install/Replace curb	
☐ Other (define)	

Comments: Curb both quadrants by City and street light relocated by city.

☐ Install/upgrade traffic signal preemption	
☐ No improvements needed	

☐ Other (define)	

Acknowledgement of Recommendations (each entity represented at the diagnostic must have at least one signature acknowledgement):

Jim Perkins | Greg Martin | [illegible]

Dave Bowlin | Scott Indick | [illegible]

Field Dimensions

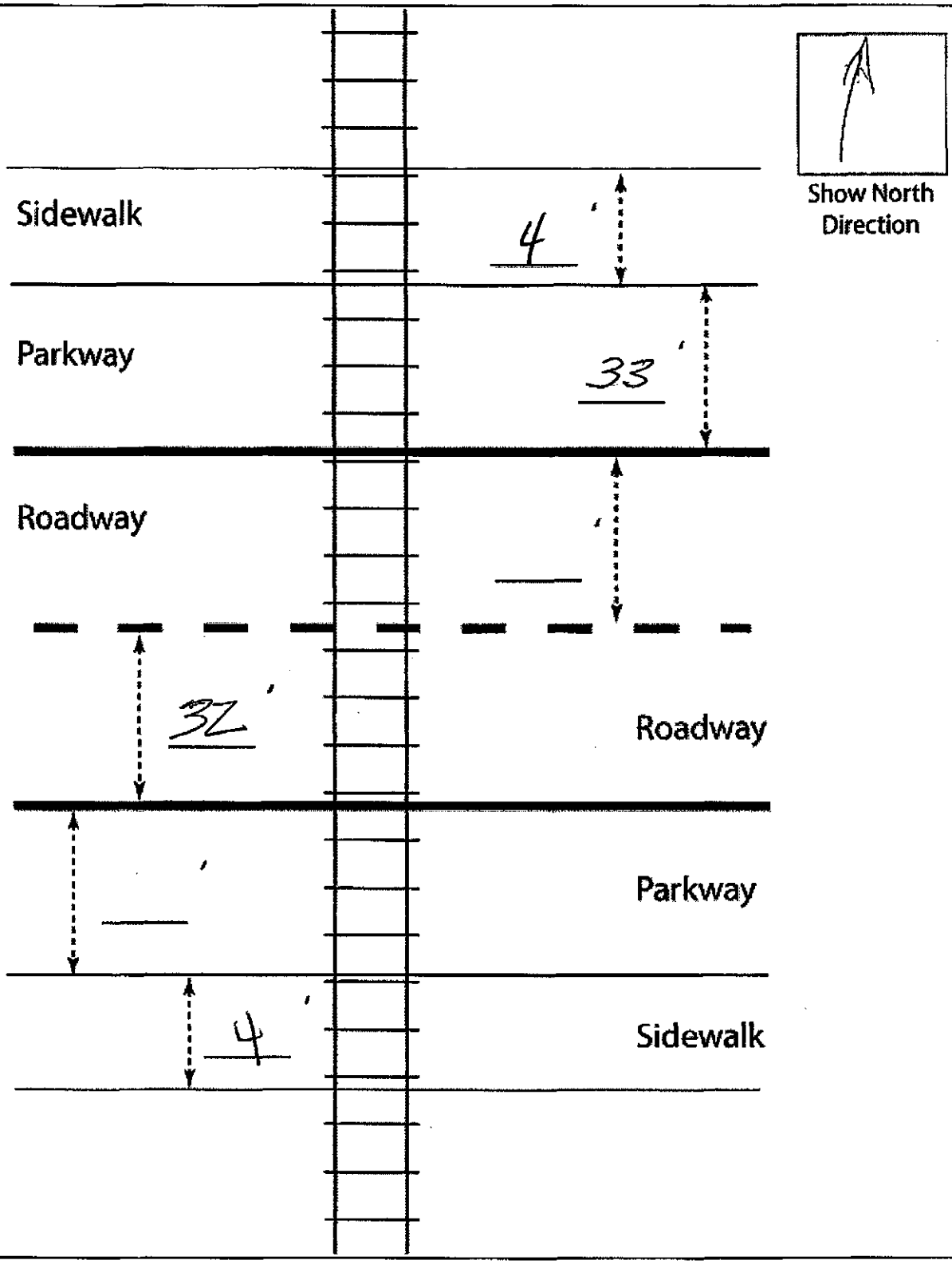

Crossing Angle ☐ 0-29° ☐ 30-59° ☐ 60-90° Measured in _____ Quadrant?

Measurements by: _____

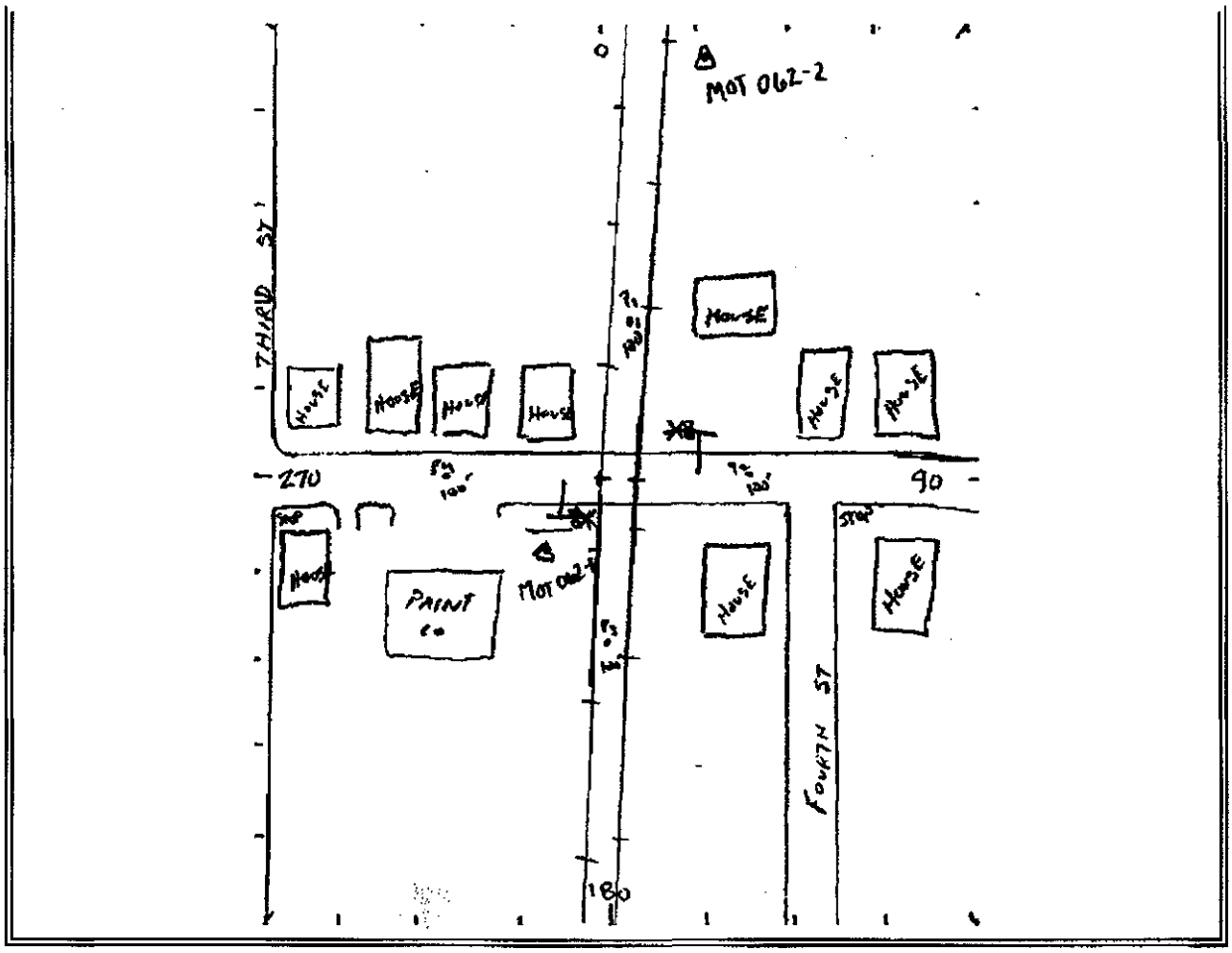
MOT 062-2
THIRD ST
House
House
House
House
House
House
House
270
90
PAINT Co
House
House
House
FOURTH ST
180

Back to Top

Field Sketch

Crossing Angle ☐ 0-29° ☐ 30-59° ☐ 60-90° Measured in _____ Quadrant?

Sketch by: _____

TABLE I

Clearing Sight Distances

Maximum Authorized Train Speed	Distance (dT) Along Railroad from Crossing (ft)
1 - 10	240
15	360
20	480
25	600
30	720
35	840
40	960
45	1080
50	1200
55	1320
60	1440
65	1560
70	1680
75	1800
80	1920
85	2040
90	2160

Source: R-H Grade Crossing Handbook Table 36 (pp. 132-133)

Notes:

All calculated distances are rounded up to the next higher 5-foot increment.

Distances indicated are for 65-ft double bottom semi-tractor trailers and level single track 90 degree crossings; and may need to be adjusted for multiple tracks, skewed crossings or approaches on grades.

Clearing Sight Distance is to be measured in each vehicle travel direction at non-gated crossings as viewed from a point 25 feet from centerline of nearest track in the center of whichever travel lane is nearest the direction along track being measured.

Table 2

Stopping Sight Distances

Highway Vehicle Speed	Distance (dH) Along Roadway from Crossing (ft)
0	n/a
5	50
10	70
15	105
20	135
25	180
30	225
35	280
40	340
45	410
50	490
55	570
60	660
65	760
70	865

Source: R-H Grade Crossing Handbook Table 36 (pp. 132-133)

Notes:

All calculated distances are rounded up to the next higher 5-foot increment.

Distances indicated are for 65-ft double bottom semi-tractor trailers on dry level pavements.

Stopping Sight Distance is to be measured on each roadway approach to crossing from stop bar.

Ohio Rail Development Commission
1980 W. Broad Street, 2nd Floor
Columbus, OH 43223

Diagnostic Review Team Survey

Date: 9.23.11

Location Data

Street or Road Name:	Richard St.		
Route/Road Number (i.e. Twp., Co., SR or US)		AAR-DOT No.:	524649K
County: Montgomery	Township:	City: (In or Near)	Miamisburg
Railroad Name: Norfolk Southern (NS)	Railroad Division: ~~Dearborn~~ LAKE	Branch/Line Name:	Cincinnati LI
Nearest RR Timetable Station: Oxford		RR Milepost:	217.5

On-Site Review Team

(Include: Name – Organization – Phone Number)

1. TIM PERKINS ORDC 614-644-0284
2. Matt Malich ORDC 614-387-5162
3. Derrick Drake NS 304-712-0220
4. GEORGE MARTIN PUCO 614-752-9107
5. BOB STANLEY CITY OF MIAMISBURG 937 847-6531
6. DAVE BOWLIN CITY OF MIAMISBURG 937 847-6639
7.
8.
9.
10.
11.
12.
13.

Existing Traffic Control Devices

Type of Warning Devices	Installed?		Quantity/Comments
Advance Warning Signs	☑ Yes	☐ No	
'Stop' Signs	☐ Yes	☑ No	
'Stop Ahead' Signs	☐ Yes	☑ No	
Pavement Markings	☑ Yes	☐ No	
Crossbucks	☐ Yes	☑ No	
Number of Tracks Signs	☐ Yes	☑ No	
Inventory Tags	☑ Yes	☐ No	
Interconnected Highway Traffic Signal	☐ Yes	☑ No	
Mast-Mounted Flashing Lights	☑ Yes	☐ No	
Cantilever Flashing Lights	☐ Yes	☑ No	Number: Length:
Side Lights	☐ Yes	☑ No	
Automatic Gates	☐ Yes	☑ No	Number: Length:
Bells	☑ Yes	☐ No	One

UPDATED (12/2006)

Sidewalk Gate Arms	☐ Yes ☑ No	
'No Turn' Signs	☐ Yes ☑ No	
Illumination	☑ Yes ☐ No	
Is crossing flagged by train crew?	☐ Yes ☐ No	
Other	☐ Yes ☐ No	

Safety Data (Obtain crash reports, if possible, prior to review)

	Initial Information (from database)	Revised
Number & dates of crashes in previous 5 years	0	
Hazard Ranking	501 Date Run: 8/19/2011	

Railroad Data

Railroad Characteristics	Initial Information (from database)	Revised
Total trains per day	15	
< 1 per day		
Day thru trains	6	
Night thru trains	4	
Daytime switching movements	3	
Nighttime switching movements	2	
Total number of tracks	2	
Number of main tracks	2	
Number of other tracks	0	
Maximum train speed	45	
Typical train speed		
Amtrak		

If non-gated crossing, is clearing sight distance adequate in all quadrants? (See Table 1) ☑ Yes ☐ No

If multiple tracks, can two trains occupy crossing at the same time? ☑ Yes ☐ No

Can one train block the motorists' view of another train at crossing? ☑ Yes (Explain below) ☐ No

Are there other track(s) crossing this same roadway within 100 ft of this crossing? ☐ Yes ☑ No

If yes, Crossing DOT #(if different) _____

If yes, distance _____ (take measurement between track centerlines at closest point along roadway)

Roadway Data

Local Highway Authority: City of Miamisburg

Roadway Characteristics	Initial Information (from database)	Revised
Average daily traffic	1890	
Highway paved	☒ Yes ☐ No	☐ Yes ☐ No

Roadway Surface: ☑ Blacktop ☐ Gravel ☐ Concrete ☐ Other _____

Roadway width: 36 ft. Both sides at crossing. 40' @ 55' back from crossing. East Approach

Number of highway lanes	2	
Urban or Rural	Urban	
Vehicle Speed: 35 MPH		

School Bus Operation: ☐ No ☑ Yes _____ Amount

Hazardous Materials Trucks: ☑ No ☐ Yes _____ Amount

Shoulders: ☑ No ☐ Yes

Is the shoulder surfaced? ☑ No ☐ Yes

Is there existing guardrail along roadway in crossing vicinity? ☑ No ☐ Yes

Is stopping site distance adequate? (See Table 2) ☑ Yes ☐ No If no, deficient approach(es) _____

Quadrant NE Curb and Gutter:	Quadrant SW Curb and Gutter:
☐ Functional (Curb height = 4" or more)	☐ Functional (Curb height = 4" or more)
☐ Non-functional (Curb height = Less than 4")	☐ Non-functional (Curb height = Less than 4")
☑ None	☑ None

Pedestrians: ☐ No ☐ Yes

Is sidewalk present? ☑ No ☐ Yes

Is there a nearby intersection that could cause queuing over the crossing? ☑ No ☐ Yes

If yes,

Distance _____

Is this intersection signalized? ☑ No ☐ Yes

Are the signals currently interconnected with the existing crossing warning devices? ☐ No ☐ Yes

Is it the consensus of the Diagnostic Review Team that this is a potential closure project: ☑ No ☐ Yes

Explain reasons:

Type of Development

☐ Open Space	☐ Institutional	Location of nearby schools:
☑ Industrial	☐ Commercial	
☐ Residential		

Utility Information

Is commercial power available? ☐ No ☑ Yes

Utility Provider (Company Name) _____ Phone Number _____

Nearest Available Power Source _____

What other utilities are present? _____

Is there potential utility conflict(s) ☑ Yes ☐ No ☐ Unknown

Diagnostic Team Recommendations

	Quadrants Needed
☐ Install/upgrade active devices	
☐ Automatic Flashing Lights (AFLS)	
☐ AFLS /Cants	
☐ AFLS / Gates	
☐ AFLS / Gates / Cants	
☐ Upgrade circuitry	
☐ Sidelights	
☐ Guardrail Needed	
☐ Install/Replace curb	
☐ Other (define)	

Comments:

☐ Install/upgrade traffic signal preemption	
☐ No improvements needed	

☐ Other (define)	

Acknowledgement of Recommendations (each entity represented at the diagnostic must have at least one signature acknowledgement):

Tim Perkins | | Dave Bowling

Field Dimensions

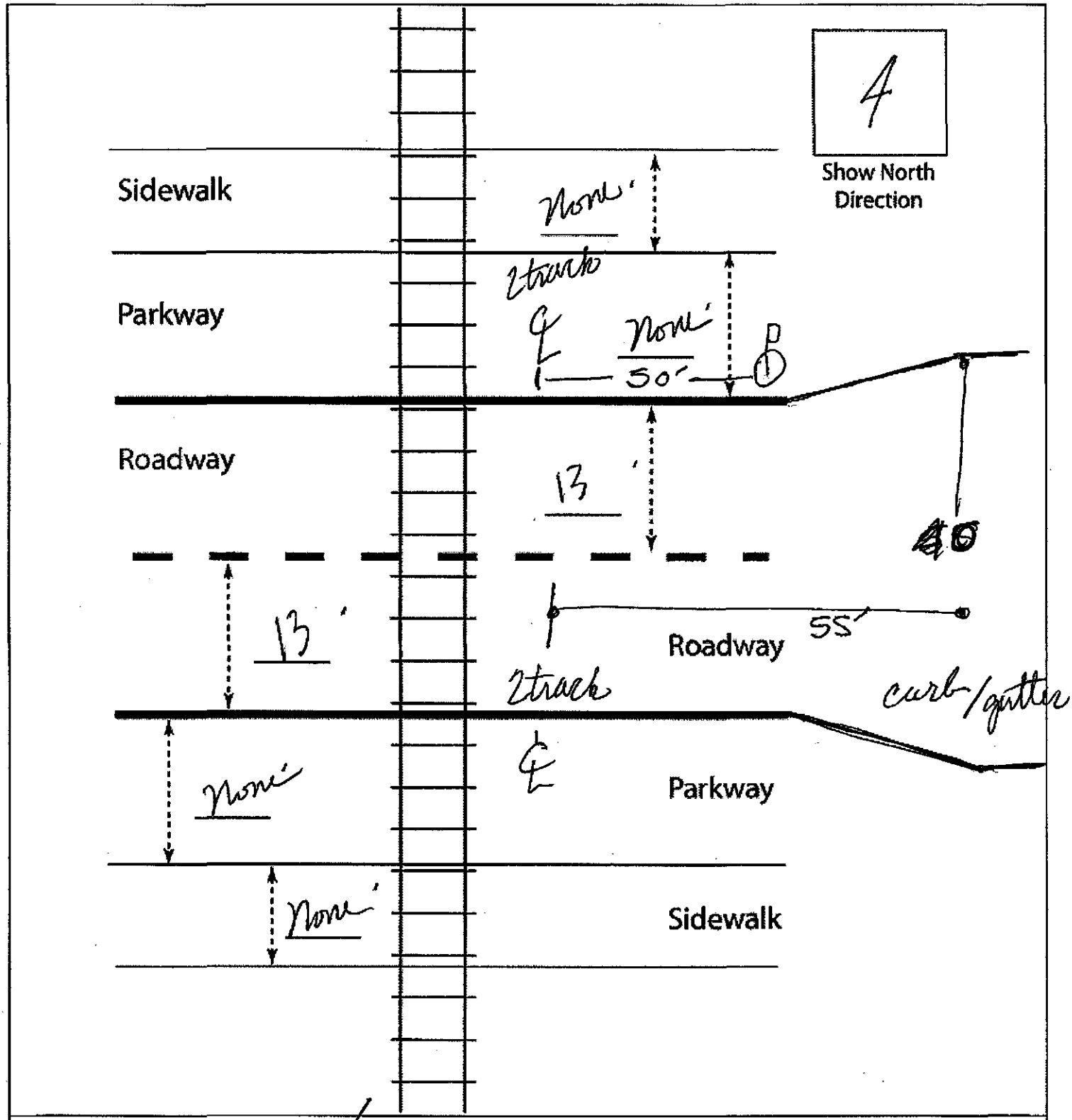

Crossing Angle ☐ 0-29° ☐ 30-59° ☑ 60-90° Measured in _____ Quadrant?

Measurements by: AP

UPDATED (12/2006)

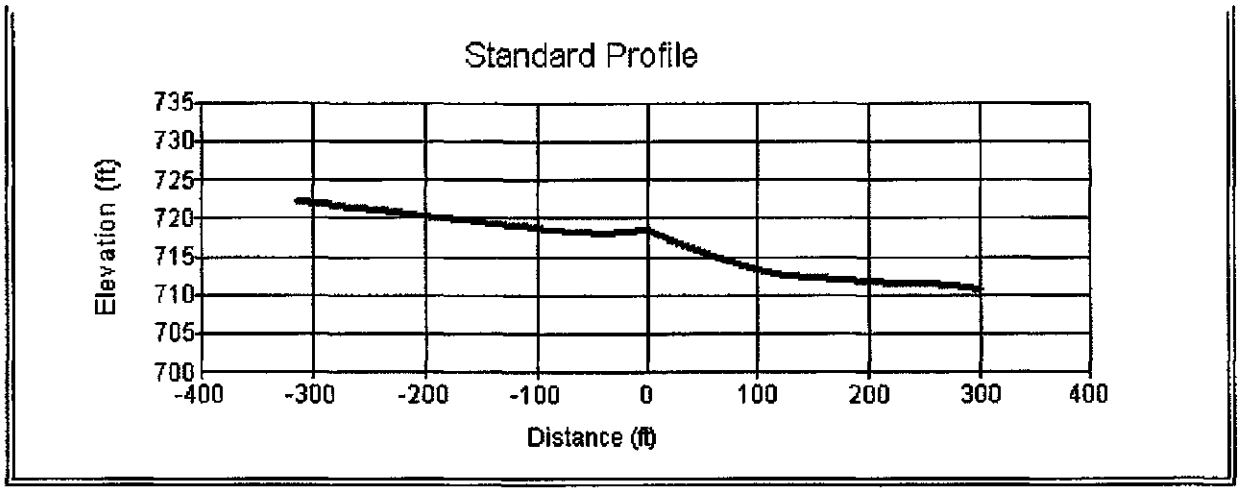

(Click on Profile to View Data)

Site Sketch

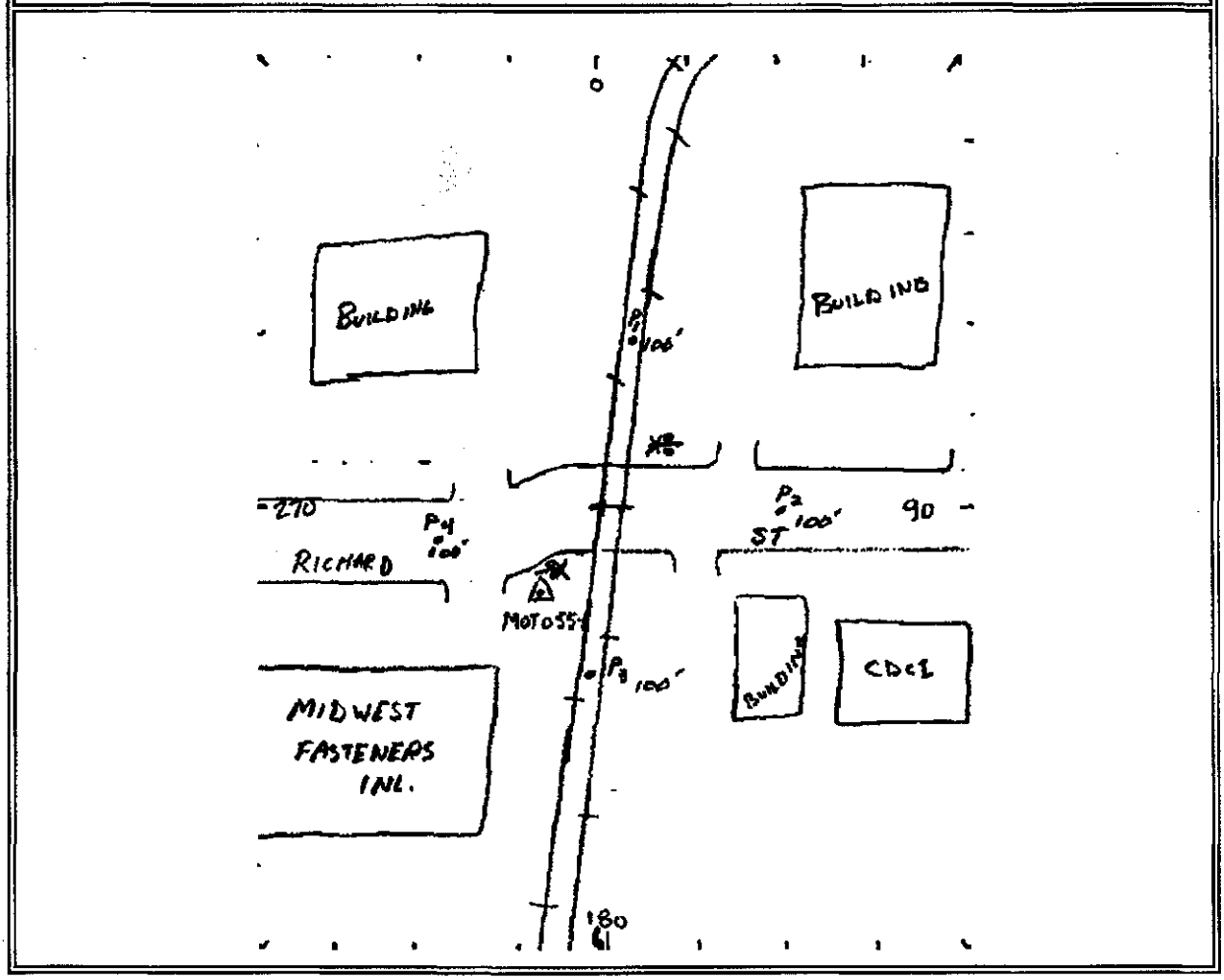

Back to Top

Field Sketch

Crossing Angle ☐ 0-29° ☐ 30-59° ☐ 60-90° Measured in _____ Quadrant?

Sketch by: _____

TABLE 1

Clearing Sight Distances

Maximum Authorized Train Speed	Distance (dT) Along Railroad from Crossing (ft)
1 - 10	240
15	360
20	480
25	600
30	720
35	840
40	960
45	1080
50	1200
55	1320
60	1440
65	1560
70	1680
75	1800
80	1920
85	2040
90	2160

Source: R-H Grade Crossing Handbook Table 36 (pp. 132-133)

Notes:

All calculated distances are rounded up to the next higher 5-foot increment.

Distances indicated are for 65-ft double bottom semi-tractor trailers and level single track 90 degree crossings; and may need to be adjusted for multiple tracks, skewed crossings or approaches on grades.

Clearing Sight Distance is to be measured in each vehicle travel direction at non-gated crossings as viewed from a point 25 feet from centerline of nearest track in the center of whichever travel lane is nearest the direction along track being measured.

Table 2

Stopping Sight Distances

Highway Vehicle Speed	Distance (dH) Along Roadway from Crossing (ft)
0	n/a
5	50
10	70
15	105
20	135
25	180
30	225
35	280
40	340
45	410
50	490
55	570
60	660
65	760
70	865

Source: R-H Grade Crossing Handbook Table 36 (pp. 132-133)

Notes:

All calculated distances are rounded up to the next higher 5-foot increment.

Distances indicated are for 65-ft double bottom semi-tractor trailers on dry level pavements.

Stopping Sight Distance is to be measured on each roadway approach to crossing from stop bar.

DEPARTMENT OF TRANSPORTATION
FEDERAL RAILROAD ADMINISTRATION (FRA)

HIGHWAY-RAIL GRADE CROSSING ACCIDENT/INCIDENT REPORT

OMB Approval No. 2130-0500

Name Of		Alphabetic Code	RR Accident/Incident No.
1. Reporting Railroad	Consolidated Rail Corp. [CR]	1a. CR	1b. 080300
2. Other Railroad Involved in Train Accident/Incident		2a.	2b.
3. Railroad Responsible for Track Maintenance	Consolidated Rail Corp. [CR]	3a. CR	3b. 080300

4. U.S. DOT-AAR Grade Crossing ID No.	5. Date of Accident/Incident	6. Time of Accident/Incident
524649K	05/02/95	07:25 AM

7. Nearest Railroad Station	8. Division	9. County	10. State Abbr.	Code
MIAMISBURG		MONTGOMERY	39	OH

11. City *(if in a city)* MIAMISBURG | 12. Highway Name or No. RICHARD STREET | ☑ Public ☐ Private

Highway User Involved

13. Type — A. Auto, B. Truck, C. Truck-trailer, D. Pick-up truck, E. Van, F. Bus, G. School Bus, H. Motorcycle, J. Other Motor Vehicle, K. Pedestrian, M. Other *(specify)* — Code: A

14. Vehicle Speed *(est. mph at impact)*

15. Direction *(geographical)* 1. North 2. South 3. East 4. West — Code: 1

16. Position 1. Stalled on crossing 2. Stopped on Crossing 3. Moving over crossing 4. Trapped — Code: 3

20a. Was the highway user and/or rail equipment involved in the impact transporting hazardous materials? 1. Highway User 2. Rail Equipment 3. Both 4. Neither — Code: 4

Rail Equipment Involved

17. Equipment — 1. Train *(units pulling)* 2. Train *(units pushing)* 3. Train *(standing)* 4. Car(s) *(moving)* 5. Car(s) *(standing)* 6. Light loco(s) *(moving)* 7. Light loco(s) *(standing)* 8. Other *(specify)* A. Train pulling- RCL B. Train pushing- RCL C. Train standing- RCL — Code: 1

18. Position of Car Unit in Train: 1

19. Circumstance 1. Rail equipment struck highway user 2. Rail equipment struck by highway user — Code: 1

20b. Was there a hazardous materials release by 1. Highway User 2. Rail Equipment 3. Both 4. Neither — Code:

20c. State the name and quantity of the hazardous materials released, if any

21. Temperature *(specify if minus)* 45 °F

22. Visibility *(single entry)* 1. Dawn 2. Day 3. Dusk 4. Dark — Code: 2

23. Weather *(single entry)* 1. Clear 2. Cloudy 3. Rain 4. Fog 5. Sleet 6. Snow — Code: 1

24. Type of Equipment Consist *(single entry)* 1. Freight train 2. Passenger train 3. Commuter train 4. Work train 5. Single car 6. Cut of cars 7. Yard/Switching 8. Light loco(s) 9. Main./inspect. car A. Spec. MoW Equip — Code: 1

25. Track Type Used by Rail Equipment Involved 1. Main 2. Yard 3. Siding 4. Industry — Code: 1

26. Track Number or Name: NO. 1 MAIN

27. FRA Track Class: 2

28. Number of Locomotive Units: 3

29. Number of Cars: 60

30. Consist Speed *(Recorded if available)* R. Recorded E. Estimated 35 mph — Code: E

31. Time Table Direction 1. North 2. South 3. East 4. West — Code: 3

32. Type of Crossing Warning 1. Gates 2. Cantilever FLS 3. Standard FLS 4. Wig wags 5. Hwy. traffic signals 6. Audible 7. Crossbucks 8. Stop signs 9. Watchman 10. Flagged by crew 11. Other *(specify)* 12. None

Code(s)	03	07	08				

33. Signaled Crossing Warning: 20 sec warn min (1);

34. Whistle Ban 1. Yes 2. No 3. Unknown — Code:

35. Location of Warning 1. Both Sides 2. Side of Vehicle Approach 3. Opposite Side of Vehicle Approach — Code: 1

36. Crossing Warning Interconnected with Highway Signals 1. Yes 2. No 3. Unknown — Code: 2

37. Crossing Illuminated by Street Lights or Special Lights 1. Yes 2. No 3. Unknown — Code: 2

38. Driver's Age

39. Driver's Gender 1. Male 2. Female — Code:

40. Driver Drove Behind or in Front of Train and Struck or was Struck by Second Train 1. Yes 2. No 3. Unknown — Code: 2

41. Driver 1. Drove around or thru the gate 2. Stopped and then proceeded 3. Did not stop 4. Stopped on crossing 5. Other *(specify)* — Code: 3

42. Driver Passed Standing Highway Vehicle 1. Yes 2. No 3. Unknown — Code: 2

43. View of Track Obscured by *(primary obstruction)* 1. Permanent Structure 2. Standing railroad equipment 3. Passing Train 4. Topography 5. Vegetation 6. Highway Vehicles 7. Other *(specify)* 8. Not Obstructed — Code: 8

Casualties to:	Killed	Injured
46. Highway-Rail Crossing Users	0	2
49. Railroad Employees	0	0
52. Passengers on Train	0	0

44. Driver was 1. Killed 2. Injured 3. Uninjured — Code: 2

45. Was Driver in the Vehicle? 1. Yes 2. No — Code: 1

47. Highway Vehicle Property Damage *(est. dollar damage)* $0

48. Total Number of Highway-Rail Crossing Users *(include driver)* 2

50. Total Number of People on Train *(include passengers and crew)*

51. Is a Rail Equipment Accident / Incident Report Being Filed 1. Yes 2. No — Code: 2

53a. Special Study Block | 53b. Special Study Block

54. Narrative Description

55. Typed Name and Title	56. Signature	57. Date

FORM FRA F 6180.57

* NOTE THAT ALL CASUALTIES MUST BE REPORTED ON FORM FRA F 6180.55A

Ohio Rail Development Commission
1980 W. Broad Street, 2nd Floor
Columbus, OH 43223

Diagnostic Review Team Survey

Date: 9-23-11

Location Data

Street or Road Name:	E Pearl St.		
Route/Road Number (i.e. Twp., Co., SR or US)		AAR-DOT No.:	524651L
County: Montgomery	Township:	City: (In or Near)	Miamisburg
Railroad Name: Norfolk Southern (NS)	Railroad Division: Dearborn	Branch/Line Name:	Cincinnati LI
Nearest RR Timetable Station: Miamisburg		RR Milepost:	217.9

On-Site Review Team

(Include: Name – Organization – Phone Number)

1. TIM PERKINS ORDC 614-644-0284
2. Matt Malich ORDC 614-387-5162
3. Derrick Drake NS 304-712-0228
4. GEORGE MATTON PUCO 614-752-9107
5. BOB STANLEY CITY OF MIAMISBURG 937-847-6531
6. DAVE BOWLIN CITY OF MIAMISBURG 937-847-6639
7.
8.
9.
10.
11.
12.
13.

Existing Traffic Control Devices

Type of Warning Devices	Installed?		Quantity/Comments
Advance Warning Signs	☑ Yes	☐ No	
'Stop' Signs	☐ Yes	☑ No	
'Stop Ahead' Signs	☐ Yes	☑ No	
Pavement Markings	☑ Yes	☐ No	
Crossbucks	☐ Yes	☐ No	
Number of Tracks Signs	☐ Yes	☑ No	
Inventory Tags	☑ Yes	☐ No	
Interconnected Highway Traffic Signal	☐ Yes	☑ No	
Mast-Mounted Flashing Lights	☑ Yes	☐ No	
Cantilever Flashing Lights	☐ Yes	☑ No	Number: Length:
Side Lights	☑ Yes	☐ No	
Automatic Gates	☑ Yes	☐ No	Number: Length:
Bells	☑ Yes	☐ No	

Sidewalk Gate Arms	☐ Yes ☑ No	
'No Turn' Signs	☐ Yes ☑ No	
Illumination	☐ Yes ☑ No	
Is crossing flagged by train crew?	☐ Yes ☑ No	
Other	☐ Yes ☑ No	

Safety Data (Obtain crash reports, if possible, prior to review)

	Initial Information (from database)	Revised
Number & dates of crashes in previous 5 years	0	
Hazard Ranking	2141 Date Run: 8/19/2011	

Railroad Data

Railroad Characteristics	Initial Information (from database)	Revised
Total trains per day	18	
< 1 per day		
Day thru trains	6	
Night thru trains	10	
Daytime switching movements	2	
Nighttime switching movements	0	
Total number of tracks	2	
Number of main tracks	2	
Number of other tracks	0	
Maximum train speed	45	
Typical train speed		
Amtrak		

If non-gated crossing, is clearing sight distance adequate in all quadrants? (See Table 1) ☐ Yes ☐ No

If multiple tracks, can two trains occupy crossing at the same time? ☑ Yes ☐ No

Can one train block the motorists' view of another train at crossing? ☑ Yes (Explain below) ☐ No

Are there other track(s) crossing this same roadway within 100 ft of this crossing? ☐ Yes ☑ No

If yes, Crossing DOT #(if different) _____

If yes, distance _____ (take measurement between track centerlines at closest point along roadway)

Roadway Data

Local Highway Authority: City of Miamisburg

Roadway Characteristics	Initial Information (from database)	Revised
Average daily traffic	1569	
Highway paved	☒ Yes ☐ No	☐ Yes ☐ No

Roadway Surface: ☒ Blacktop ☐ Gravel ☐ Concrete ☐ Other _____

Roadway width: 26.7 ft. West 34.6 ft East approach

Number of highway lanes	2	
Urban or Rural	Urban	
Vehicle Speed: 25 MPH		

School Bus Operation: ☐ No ☑ Yes _____ Amount

Hazardous Materials Trucks: ☑ No ☐ Yes _____ Amount

Shoulders: ☑ No ☐ Yes

Is the shoulder surfaced? ☑ No ☐ Yes

Is there existing guardrail along roadway in crossing vicinity? ☑ No ☐ Yes

Is stopping site distance adequate? (See Table 2) ☑ Yes ☐ No If no, deficient approach(es) _____

Quadrant NE Curb and Gutter:	Quadrant SW Curb and Gutter:
☐ Functional (Curb height = 4" or more)	☐ Functional (Curb height = 4" or more)
☐ Non-functional (Curb height = Less than 4")	☐ Non-functional (Curb height = Less than 4")
☑ None	☑ None

Pedestrians: ☐ No ☑ Yes

Is sidewalk present? ☐ No ☑ Yes

Is there a nearby intersection that could cause queuing over the crossing? ☑ No ☐ Yes

If yes,

Distance _____

Is this intersection signalized? ☑ No ☐ Yes

Are the signals currently interconnected with the existing crossing warning devices? ☑ No ☐ Yes

Is it the consensus of the Diagnostic Review Team that this is a potential closure project: ☑ No ☐ Yes

Explain reasons:

Type of Development

☐ Open Space	☐ Institutional	Location of nearby schools:
☐ Industrial	☑ Commercial	
☑ Residential		

Utility Information

Is commercial power available? ☐ No ☑ Yes

Utility Provider (Company Name) Dayton P&L Phone Number _____

Nearest Available Power Source _____

What other utilities are present? _____

Is there potential utility conflict(s) ☐ Yes ☐ No ☐ Unknown

Diagnostic Team Recommendations

	Quadrants Needed
☐ Install/upgrade active devices	
☐ Automatic Flashing Lights (AFLS)	
☐ AFLS /Cants	
☐ AFLS / Gates	
☐ AFLS / Gates / Cants	
☐ Upgrade circuitry	
☐ Sidelights	
☐ Guardrail Needed	
☐ Install/Replace curb	
☐ Other (define)	

Comments: Guy pole may be relocated

☐ Install/upgrade traffic signal preemption	
☐ No improvements needed	

☐ Other (define)	

Acknowledgement of Recommendations (each entity represented at the diagnostic must have at least one signature acknowledgement):

Dave Bowlin	Matt Snider	Jim Perkins

Field Dimensions

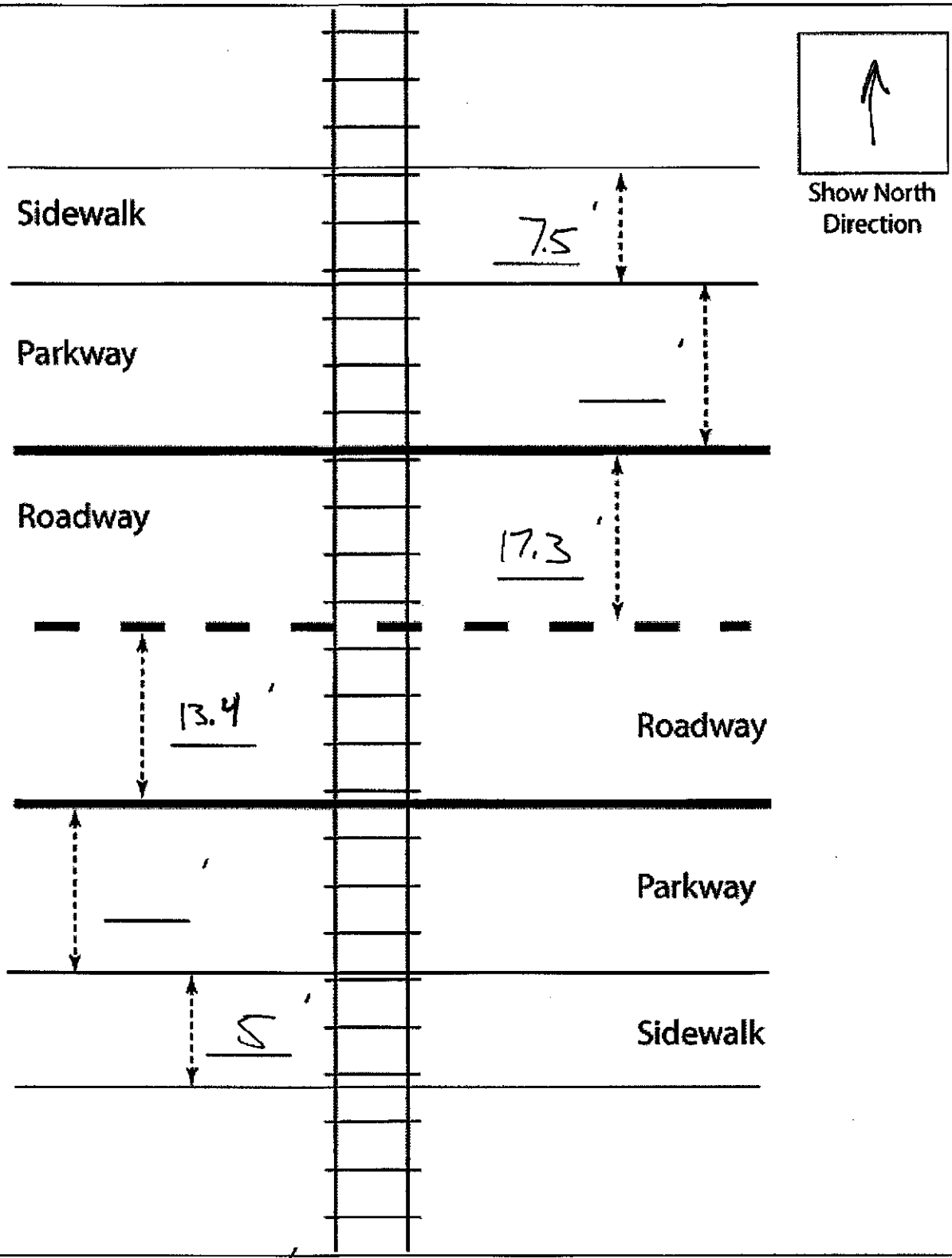

Crossing Angle ☐ 0-29° ☐ 30-59° ☑ 60-90° Measured in _____ Quadrant?

Measurements by: MM, TP

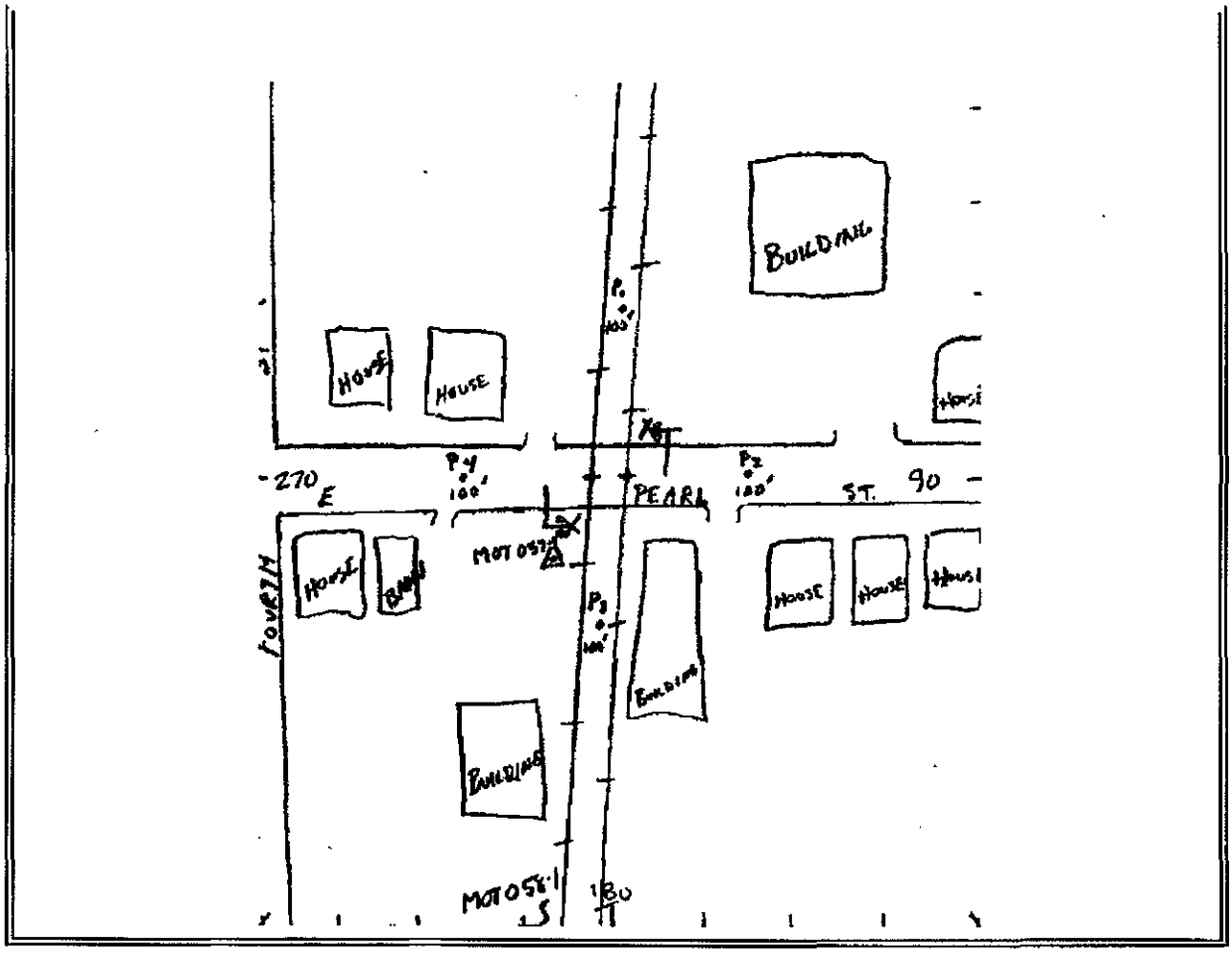
BUILDING
HOUSE
HOUSE
270
E
PEARL
ST.
90
FOURTH
HOUSE
HOUSE
HOUSE
BUILDING
BUILDING
180

Back to Top

Field Sketch

Crossing Angle ☐ 0-29° ☐ 30-59° ☐ 60-90° Measured in _____ Quadrant?

Sketch by: _____

DEPARTMENT OF TRANSPORTATION
FEDERAL RAILROAD ADMINISTRATION (FRA)

HIGHWAY-RAIL GRADE CROSSING ACCIDENT/INCIDENT REPORT

OMB Approval No. 2130-0500

Name Of		Alphabetic Code	RR Accident/Incident No.
1. Reporting Railroad	Consolidated Rail Corp. [CR]	1a. CR	1b. 80309
2. Other Railroad Involved in Train Accident/Incident		2a.	2b.
3. Railroad Responsible for Track Maintenance	Consolidated Rail Corp. [CR]	3a. CR	3b. 80309

4. U.S. DOT-AAR Grade Crossing ID No. **524651L** | 5. Date of Accident/Incident 07/14/92 | 6. Time of Accident/Incident 01:25 PM

7. Nearest Railroad Station	8. Division	9. County	10. State Abbr.	Code
MIAMISBURG		MONTGOMERY	39	OH

11. City *(if in a city)* MIAMISBURG | 12. Highway Name or No. PEARL STREET | ☑ Public ☐ Private

Highway User Involved

13. Type — A. Auto, B. Truck, C. Truck-trailer, D. Pick-up truck, E. Van, F. Bus, G. School Bus, H. Motorcycle, J. Other Motor Vehicle, K. Pedestrian, M. Other *(specify)* — Code: A

14. Vehicle Speed *(est. mph at impact)*: 3

15. Direction *(geographical)* 1. North 2. South 3. East 4. West — Code: 4

16. Position 1. Stalled on crossing 2. Stopped on Crossing 3. Moving over crossing 4. Trapped — Code: 3

20a. Was the highway user and/or rail equipment involved in the impact transporting hazardous materials? 1. Highway User 2. Rail Equipment 3. Both 4. Neither — Code: 4

Rail Equipment Involved

17. Equipment 1. Train *(units pulling)* 2. Train *(units pushing)* 3. Train *(standing)* 4. Car(s) *(moving)* 5. Car(s) *(standing)* 6. Light loco(s) *(moving)* 7. Light loco(s) *(standing)* 8. Other *(specify)* A. Train pulling- RCL B. Train pushing- RCL C. Train standing- RCL — Code: 1

18. Position of Car Unit in Train: 1

19. Circumstance 1. Rail equipment struck highway user 2. Rail equipment struck by highway user — Code: 1

20b. Was there a hazardous materials release by 1. Highway User 2. Rail Equipment 3. Both 4. Neither — Code:

20c. State the name and quantity of the hazardous materials released, if any

21. Temperature *(specify if minus)*: 90 °F

22. Visibility *(single entry)* 1. Dawn 2. Day 3. Dusk 4. Dark — Code: 2

23. Weather *(single entry)* 1. Clear 2. Cloudy 3. Rain 4. Fog 5. Sleet 6. Snow — Code: 1

24. Type of Equipment Consist *(single entry)* 1. Freight train 2. Passenger train 3. Commuter train 4. Work train 5. Single car 6. Cut of cars 7. Yard/Switching 8. Light loco(s) 9. Main./inspect. car A. Spec. MoW Equip — Code: 1

25. Track Type Used by Rail Equipment Involved 1. Main 2. Yard 3. Siding 4. Industry — Code: 1

26. Track Number or Name: #1 MAIN TRACK

27. FRA Track Class: 4

28. Number of Locomotive Units: 1

29. Number of Cars: 6

30. Consist Speed *(Recorded if available)* R. Recorded E. Estimated: 43 mph — Code: E

31. Time Table Direction 1. North 2. South 3. East 4. West — Code: 4

32. Type of Crossing Warning 1. Gates 2. Cantilever FLS 3. Standard FLS 4. Wig wags 5. Hwy. traffic signals 6. Audible 7. Crossbucks 8. Stop signs 9. Watchman 10. Flagged by crew 11. Other *(specify)* 12. None

Code(s): 03

33. Signaled Crossing Warning: 20 sec warn min (1);

34. Whistle Ban 1. Yes 2. No 3. Unknown — Code:

35. Location of Warning 1. Both Sides 2. Side of Vehicle Approach 3. Opposite Side of Vehicle Approach — Code: 1

36. Crossing Warning Interconnected with Highway Signals 1. Yes 2. No 3. Unknown — Code: 2

37. Crossing Illuminated by Street Lights or Special Lights 1. Yes 2. No 3. Unknown — Code: 2

38. Driver's Age

39. Driver's Gender 1. Male 2. Female — Code:

40. Driver Drove Behind or in Front of Train and Struck or was Struck by Second Train 1. Yes 2. No 3. Unknown — Code: 2

41. Driver 1. Drove around or thru the gate 2. Stopped and then proceeded 3. Did not stop 4. Stopped on crossing 5. Other *(specify)* — Code: 2

42. Driver Passed Standing Highway Vehicle 1. Yes 2. No 3. Unknown — Code: 2

43. View of Track Obscured by *(primary obstruction)* 1. Permanent Structure 2. Standing railroad equipment 3. Passing Train 4. Topography 5. Vegetation 6. Highway Vehicles 7. Other *(specify)* 8. Not Obstructed — Code: 5

Casualties to:	Killed	Injured
46. Highway-Rail Crossing Users	0	0
49. Railroad Employees	0	0
52. Passengers on Train	0	0

44. Driver was 1. Killed 2. Injured 3. Uninjured — Code: 3

45. Was Driver in the Vehicle? 1. Yes 2. No — Code: 1

47. Highway Vehicle Property Damage *(est. dollar damage)*: $3,000

48. Total Number of Highway-Rail Crossing Users *(include driver)*: 1

50. Total Number of People on Train *(include passengers and crew)*:

51. Is a Rail Equipment Accident / Incident Report Being Filed 1. Yes 2. No — Code: 2

53a. Special Study Block | 53b. Special Study Block

54. Narrative Description

55. Typed Name and Title | 56. Signature | 57. Date

FORM FRA F 6180.57

* NOTE THAT ALL CASUALTIES MUST BE REPORTED ON FORM FRA F 6180.55A

DEPARTMENT OF TRANSPORTATION
FEDERAL RAILROAD ADMINISTRATION (FRA)

HIGHWAY-RAIL GRADE CROSSING ACCIDENT/INCIDENT REPORT

OMB Approval No. 2130-0500

Name Of		Alphabetic Code	RR Accident/Incident No.
1. Reporting Railroad	Grand Trunk Western RR Inc. [GTW]	1a. GTW	1b. 88488
2. Other Railroad Involved in Train Accident/Incident		2a.	2b.
3. Railroad Responsible for Track Maintenance	Consolidated Rail Corp. [CR]	3a. CR	3b. XXX

4. U.S. DOT-AAR Grade Crossing ID No. **524651L** | 5. Date of Accident/Incident 12/08/88 | 6. Time of Accident/Incident 05:15 PM

7. Nearest Railroad Station	8. Division	9. County	10. State Abbr.	Code
MIAMISBURG		MONTGOMERY	39	OH

11. City *(if in a city)* MIAMISBURG | 12. Highway Name or No. PEARL ST | ☑ Public ☐ Private

Highway User Involved

13. Type — A. Auto, B. Truck, C. Truck-trailer, D. Pick-up truck, E. Van, F. Bus, G. School Bus, H. Motorcycle, J. Other Motor Vehicle, K. Pedestrian, M. Other *(specify)* — Code: A

14. Vehicle Speed *(est. mph at impact)*

15. Direction *(geographical)* 1. North 2. South 3. East 4. West — Code: 4

16. Position 1. Stalled on crossing 2. Stopped on Crossing 3. Moving over crossing 4. Trapped — Code: 3

20a. Was the highway user and/or rail equipment involved in the impact transporting hazardous materials? 1. Highway User 2. Rail Equipment 3. Both 4. Neither — Code: 4

Rail Equipment Involved

17. Equipment — 1. Train *(units pulling)*, 2. Train *(units pushing)*, 3. Train *(standing)*, 4. Car(s) *(moving)*, 5. Car(s) *(standing)*, 6. Light loco(s) *(moving)*, 7. Light loco(s) *(standing)*, 8. Other *(specify)* A. Train pulling- RCL, B. Train pushing- RCL, C. Train standing- RCL — Code: 1

18. Position of Car Unit in Train: 1

19. Circumstance 1. Rail equipment struck highway user 2. Rail equipment struck by highway user — Code: 1

20b. Was there a hazardous materials release by 1. Highway User 2. Rail Equipment 3. Both 4. Neither — Code:

20c. State the name and quantity of the hazardous materials released, if any

21. Temperature *(specify if minus)* 36 °F

22. Visibility *(single entry)* 1. Dawn 2. Day 3. Dusk 4. Dark — Code: 2

23. Weather *(single entry)* 1. Clear 2. Cloudy 3. Rain 4. Fog 5. Sleet 6. Snow — Code: 1

24. Type of Equipment Consist *(single entry)* 1. Freight train 2. Passenger train 3. Commuter train 4. Work train 5. Single car 6. Cut of cars 7. Yard/Switching 8. Light loco(s) 9. Main./inspect. car A. Spec. MoW Equip — Code: 1

25. Track Type Used by Rail Equipment Involved 1. Main 2. Yard 3. Siding 4. Industry — Code: 1

26. Track Number or Name: MAIN

27. FRA Track Class	28. Number of Locomotive Units	29. Number of Cars	30. Consist Speed *(Recorded if available)* R. Recorded E. Estimated	Code	31. Time Table Direction 1. North 2. South 3. East 4. West	Code
3	2	95	40 mph	E		1

32. Type of Crossing Warning — 1. Gates, 2. Cantilever FLS, 3. Standard FLS, 4. Wig wags, 5. Hwy. traffic signals, 6. Audible, 7. Crossbucks, 8. Stop signs, 9. Watchman, 10. Flagged by crew, 11. Other *(specify)*, 12. None

Code(s)	03	07					

33. Signaled Crossing Warning: 20 sec warn min (1);

34. Whistle Ban 1. Yes 2. No 3. Unknown — Code:

35. Location of Warning 1. Both Sides 2. Side of Vehicle Approach 3. Opposite Side of Vehicle Approach — Code: 1

36. Crossing Warning Interconnected with Highway Signals 1. Yes 2. No 3. Unknown — Code: 3

37. Crossing Illuminated by Street Lights or Special Lights 1. Yes 2. No 3. Unknown — Code: 2

38. Driver's Age

39. Driver's Gender 1. Male 2. Female — Code:

40. Driver Drove Behind or in Front of Train and Struck or was Struck by Second Train 1. Yes 2. No 3. Unknown — Code: 2

41. Driver 1. Drove around or thru the gate 2. Stopped and then proceeded 3. Did not stop 4. Stopped on crossing 5. Other *(specify)* — Code: 3

42. Driver Passed Standing Highway Vehicle 1. Yes 2. No 3. Unknown — Code: 2

43. View of Track Obscured by *(primary obstruction)* 1. Permanent Structure 2. Standing railroad equipment 3. Passing Train 4. Topography 5. Vegetation 6. Highway Vehicles 7. Other *(specify)* 8. Not Obstructed — Code: 8

Casualties to:	Killed	Injured
46. Highway-Rail Crossing Users	1	0
49. Railroad Employees	0	0
52. Passengers on Train	0	0

44. Driver was 1. Killed 2. Injured 3. Uninjured — Code: 1

45. Was Driver in the Vehicle? 1. Yes 2. No — Code: 1

47. Highway Vehicle Property Damage *(est. dollar damage)* $0

48. Total Number of Highway-Rail Crossing Users *(include driver)* 1

50. Total Number of People on Train *(include passengers and crew)*

51. Is a Rail Equipment Accident / Incident Report Being Filed 1. Yes 2. No — Code: 2

53a. Special Study Block | 53b. Special Study Block

54. Narrative Description

55. Typed Name and Title | 56. Signature | 57. Date

FORM FRA F 6180.57

* NOTE THAT ALL CASUALTIES MUST BE REPORTED ON FORM FRA F 6180.55A

Need plan from NS

Ohio Rail Development Commission
1980 W. Broad Street, 2nd Floor
Columbus, OH 43223

Diagnostic Review Team Survey

Date: 9-23.11

Location Data

Street or Road Name: Lock St.

Route/Road Number (i.e. Twp., Co., SR or US):

AAR-DOT No.: 524658J

County: Montgomery

Township:

City (In or Near): Miamisburg

Railroad Name: Norfolk Southern (NS)

Railroad Division: Dearborn

Branch/Line Name: Cincinnati LI

Nearest RR Timetable Station: Miamisburg

RR Milepost: 218.6

On-Site Review Team

(Include: Name – Organization – Phone Number)

1. TIM PERKINS ORDC 614.644.6284
2. Matt Malich ORDC 614-387-5162
3. GEORGE MARTIN PUCO 614-752-9107
4. DR Dealer NS 304-712-0220
5. DAVE BOWLIN City of MIAMISBURG 937-847-6639
6. BOB STANLEY City of MIAMISBURG 937 847 6531
7.
8.
9.
10.
11.
12.
13.

Existing Traffic Control Devices

Type of Warning Devices	Installed?		Quantity/Comments
Advance Warning Signs	☑ Yes	☐ No	
'Stop' Signs	☐ Yes	☑ No	
'Stop Ahead' Signs	☐ Yes	☑ No	
Pavement Markings	☑ Yes	☐ No	
Crossbucks	☐ Yes	☐ No	
Number of Tracks Signs	☐ Yes	☑ No	
Inventory Tags	☑ Yes	☐ No	
Interconnected Highway Traffic Signal	☐ Yes	☑ No	
Mast-Mounted Flashing Lights	☑ Yes	☐ No	
Cantilever Flashing Lights	☐ Yes	☑ No	Number: Length:
Side Lights	☐ Yes	☑ No	
Automatic Gates	☐ Yes	☑ No	Number: Length:
Bells	☑ Yes	☐ No	

Sidewalk Gate Arms	☐ Yes ☑ No	
'No Turn' Signs	☐ Yes ☑ No	
Illumination	☐ Yes ☑ No	
Is crossing flagged by train crew?	☐ Yes ☑ No	
Other	☐ Yes ☑ No	

Safety Data (Obtain crash reports, if possible, prior to review)

	Initial Information (from database)	Revised
Number & dates of crashes in previous 5 years	0	
Hazard Ranking	2066 Date Run: 8/19/2011	

Railroad Data

Railroad Characteristics	Initial Information (from database)	Revised
Total trains per day	18	
< 1 per day		
Day thru trains	6	
Night thru trains	10	
Daytime switching movements	2	
Nighttime switching movements	0	
Total number of tracks	2	
Number of main tracks	2	
Number of other tracks	0	
Maximum train speed	50	
Typical train speed		
Amtrak		

If non-gated crossing, is clearing sight distance adequate in all quadrants? (See Table 1) ☐ Yes ☑ No Because of Curve SW Quadrant

If multiple tracks, can two trains occupy crossing at the same time? ☑ Yes ☐ No

Can one train block the motorists' view of another train at crossing? ☑ Yes (Explain below) ☐ No

Are there other track(s) crossing this same roadway within 100 ft of this crossing? ☐ Yes ☑ No

If yes, Crossing DOT #(if different) _____

If yes, distance _____ (take measurement between track centerlines at closest point along roadway)

Roadway Data

Local Highway Authority: City of Miamisburg

Roadway Characteristics	Initial Information (from database)	Revised
Average daily traffic	224	
Highway paved	☒ Yes ☐ No	☐ Yes ☐ No

Roadway Surface: ☒ Blacktop ☐ Gravel ☐ Concrete ☐ Other _____

Roadway width: _____ ft.

Number of highway lanes	2	
Urban or Rural	Urban	
Vehicle Speed: 25 MPH		

School Bus Operation: ☐ No ☑ Yes _____ Amount

Hazardous Materials Trucks: ☑ No ☐ Yes _____ Amount

Shoulders: ☑ No ☐ Yes

Is the shoulder surfaced? ☑ No ☐ Yes

Is there existing guardrail along roadway in crossing vicinity? ☑ No ☐ Yes

Is stopping site distance adequate? (See Table 2) ☐ Yes ☐ No If no, deficient approach(es) _____

Quadrant NE Curb and Gutter:	Quadrant SW Curb and Gutter:
☐ Functional (Curb height = 4" or more)	☐ Functional (Curb height = 4" or more)
☐ Non-functional (Curb height = Less than 4")	☐ Non-functional (Curb height = Less than 4")
☑ None	☑ None

Pedestrians: ☐ No ☐ Yes

Is sidewalk present? ☐ No ☐ Yes

Is there a nearby intersection that could cause queuing over the crossing? ☑ No ☐ Yes

If yes,

Distance _____

Is this intersection signalized? ☑ No ☐ Yes

Are the signals currently interconnected with the existing crossing warning devices? ☑ No ☐ Yes

Is it the consensus of the Diagnostic Review Team that this is a potential closure project: ☑ No ☐ Yes

Explain reasons:

Type of Development

☐ Open Space	☐ Institutional	Location of nearby schools:
☐ Industrial	☑ Commercial	
☑ Residential		

Utility Information

Is commercial power available? ☐ No ☑ Yes

Utility Provider (Company Name) Dayton P&L Phone Number _____

Nearest Available Power Source _____

What other utilities are present? _____

Is there potential utility conflict(s) ☐ Yes ☐ No ☐ Unknown

Diagnostic Team Recommendations

	Quadrants Needed
☐ Install/upgrade active devices	
☐ Automatic Flashing Lights (AFLS)	
☐ AFLS /Cants	
☐ AFLS / Gates	
☐ AFLS / Gates / Cants	
☐ Upgrade circuitry	
☐ Sidelights	
☐ Guardrail Needed	
☐ Install/Replace curb	
☐ Other (define)	

Comments: SW quad, curb by city for 4'3" offset
NE quad 8'3"
Plan will be requested.

☐ Install/upgrade traffic signal preemption	
☐ No improvements needed	

☐ Other (define)	

Acknowledgement of Recommendations (each entity represented at the diagnostic must have at least one signature acknowledgement):

Dave Bowlin	Matt Malek	Greg [illegible]

Field Dimensions

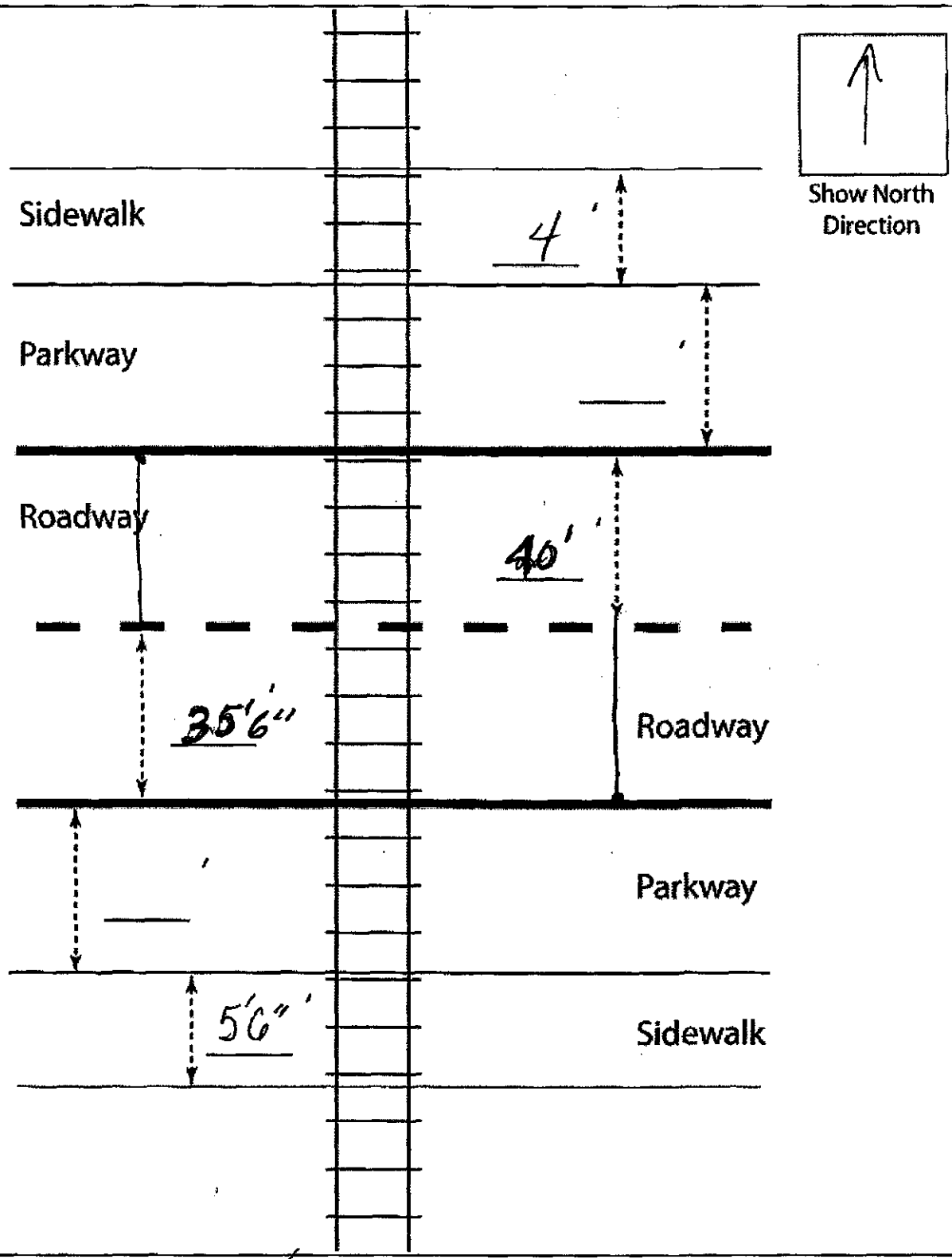

Crossing Angle ☐ 0-29° ☐ 30-59° ☑ 60-90° Measured in _____ Quadrant?

Measurements by: MM

UPDATED (12/2006)

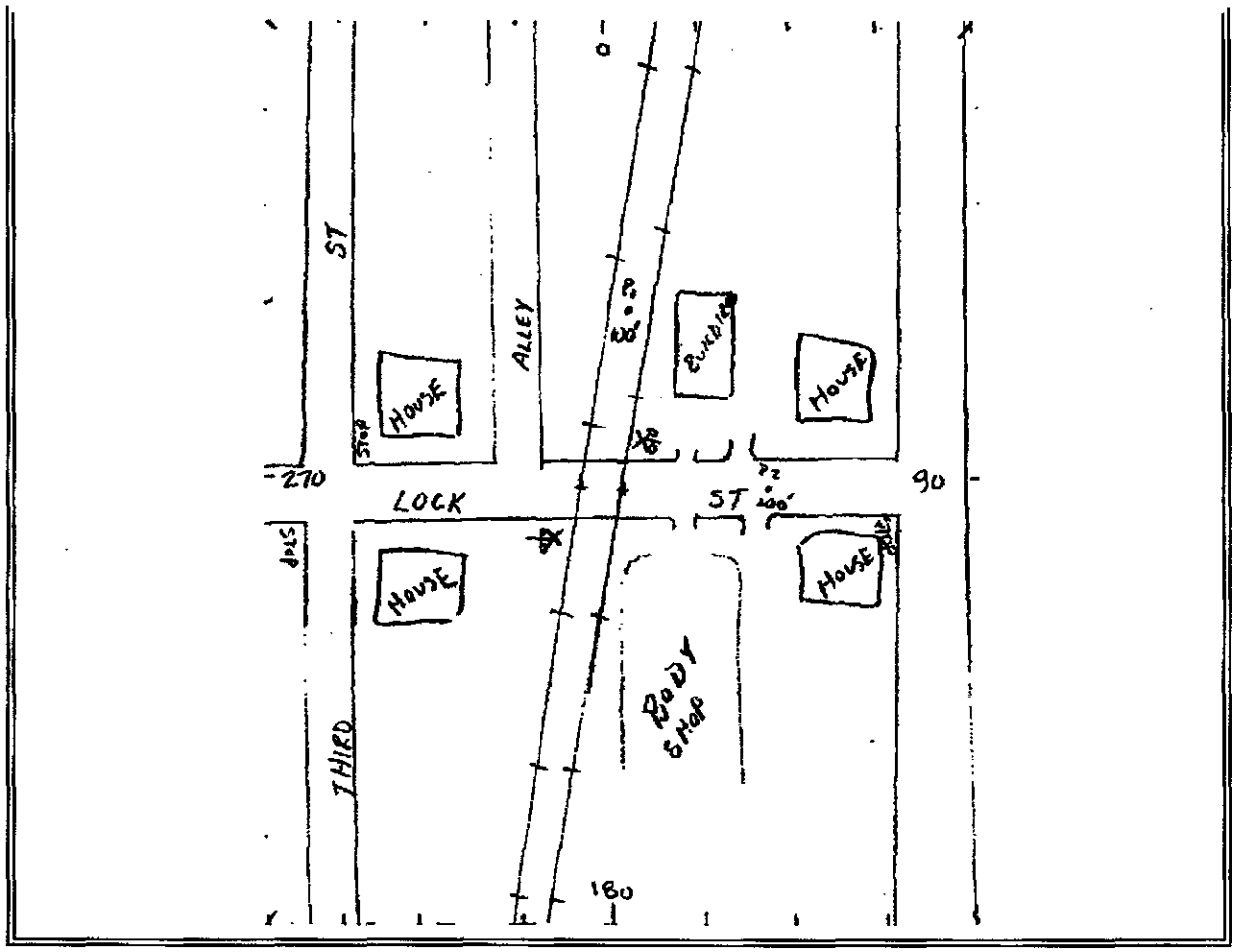
ST
ALLEY
House
Building
House
270
LOCK
ST
90
House
House
Body Shop
THIRD
160

Back to Top

Field Sketch

Crossing Angle ☐ 0-29° ☐ 30-59° ☐ 60-90° Measured in _____ Quadrant?

Sketch by: _____

TABLE 1

Clearing Sight Distances

Maximum Authorized Train Speed	Distance (dT) Along Railroad from Crossing (ft)
1 - 10	240
15	360
20	480
25	600
30	720
35	840
40	960
45	1080
50	1200
55	1320
60	1440
65	1560
70	1680
75	1800
80	1920
85	2040
90	2160

Source: R-H Grade Crossing Handbook Table 36 (pp. 132-133)

Notes:

All calculated distances are rounded up to the next higher 5-foot increment.

Distances indicated are for 65-ft double bottom semi-tractor trailers and level single track 90 degree crossings; and may need to be adjusted for multiple tracks, skewed crossings or approaches on grades.

Clearing Sight Distance is to be measured in each vehicle travel direction at non-gated crossings as viewed from a point 25 feet from centerline of nearest track in the center of whichever travel lane is nearest the direction along track being measured.

Table 2

Stopping Sight Distances

Highway Vehicle Speed	Distance (dH) Along Roadway from Crossing (ft)
0	n/a
5	50
10	70
15	105
20	135
25	180
30	225
35	280
40	340
45	410
50	490
55	570
60	660
65	760
70	865

Source: R-H Grade Crossing Handbook Table 36 (pp. 132-133)

Notes:

All calculated distances are rounded up to the next higher 5-foot increment.

Distances indicated are for 65-ft double bottom semi-tractor trailers on dry level pavements.

Stopping Sight Distance is to be measured on each roadway approach to crossing from stop bar.

DEPARTMENT OF TRANSPORTATION
FEDERAL RAILROAD ADMINISTRATION (FRA)

HIGHWAY-RAIL GRADE CROSSING ACCIDENT/INCIDENT REPORT

OMB Approval No. 2130-0500

Name Of	Alphabetic Code	RR Accident/Incident No.
1. Reporting Railroad: Consolidated Rail Corp. [CR]	1a. CR	1b. 0830301
2. Other Railroad Involved in Train Accident/Incident	2a.	2b.
3. Railroad Responsible for Track Maintenance: Consolidated Rail Corp. [CR]	3a. CR	3b. 0830301

4. U.S. DOT-AAR Grade Crossing ID No. **524658J** | 5. Date of Accident/Incident **04/07/89** | 6. Time of Accident/Incident **08:27 AM**

7. Nearest Railroad Station: CINCINATTI | 8. Division | 9. County: MONTGOMERY | 10. State Abbr. 39 Code OH

11. City *(if in a city)* MIAMISBURG | 12. Highway Name or No. LOCK STREET | ☑ Public ☐ Private

Highway User Involved

13. Type — A. Auto B. Truck C. Truck-trailer D. Pick-up truck E. Van F. Bus G. School Bus H. Motorcycle J. Other Motor Vehicle K. Pedestrian M. Other *(specify)* — Code: A

14. Vehicle Speed *(est. mph at impact)*: 10

15. Direction *(geographical)* — 1. North 2. South 3. East 4. West — Code: 1

16. Position — 1. Stalled on crossing 2. Stopped on Crossing 3. Moving over crossing 4. Trapped — Code: 3

20a. Was the highway user and/or rail equipment involved in the impact transporting hazardous materials? — 1. Highway User 2. Rail Equipment 3. Both 4. Neither — Code: 4

Rail Equipment Involved

17. Equipment — 1. Train *(units pulling)* 2. Train *(units pushing)* 3. Train *(standing)* 4. Car(s) *(moving)* 5. Car(s) *(standing)* 6. Light loco(s) *(moving)* 7. Light loco(s) *(standing)* 8. Other *(specify)* A. Train pulling- RCL B. Train pushing- RCL C. Train standing- RCL — Code: 6

18. Position of Car Unit in Train: 1

19. Circumstance — 1. Rail equipment struck highway user 2. Rail equipment struck by highway user — Code: 1

20b. Was there a hazardous materials release by — 1. Highway User 2. Rail Equipment 3. Both 4. Neither — Code:

20c. State the name and quantity of the hazardous materials released, if any

21. Temperature *(specify if minus)*: 39 °F

22. Visibility *(single entry)* — 1. Dawn 2. Day 3. Dusk 4. Dark — Code: 2

23. Weather *(single entry)* — 1. Clear 2. Cloudy 3. Rain 4. Fog 5. Sleet 6. Snow — Code: 1

24. Type of Equipment Consist *(single entry)* — 1. Freight train 2. Passenger train 3. Commuter train 4. Work train 5. Single car 6. Cut of cars 7. Yard/Switching 8. Light loco(s) 9. Main./inspect. car A. Spec. MoW Equip — Code: 8

25. Track Type Used by Rail Equipment Involved — 1. Main 2. Yard 3. Siding 4. Industry — Code: 1

26. Track Number or Name: #1 MAIN TRACK

27. FRA Track Class: 4

28. Number of Locomotive Units: 2

29. Number of Cars: 0

30. Consist Speed *(Recorded if available)* — R. Recorded E. Estimated — 45 mph — Code: E

31. Time Table Direction — 1. North 2. South 3. East 4. West — Code: 4

32. Type of Crossing Warning — 1. Gates 2. Cantilever FLS 3. Standard FLS 4. Wig wags 5. Hwy. traffic signals 6. Audible 7. Crossbucks 8. Stop signs 9. Watchman 10. Flagged by crew 11. Other *(specify)* 12. None

Code(s): 03 | 06

33. Signaled Crossing Warning: 20 sec warn min (1);

34. Whistle Ban — 1. Yes 2. No 3. Unknown — Code:

35. Location of Warning — 1. Both Sides 2. Side of Vehicle Approach 3. Opposite Side of Vehicle Approach — Code: 1

36. Crossing Warning Interconnected with Highway Signals — 1. Yes 2. No 3. Unknown — Code: 2

37. Crossing Illuminated by Street Lights or Special Lights — 1. Yes 2. No 3. Unknown — Code: 2

38. Driver's Age

39. Driver's Gender — 1. Male 2. Female — Code:

40. Driver Drove Behind or in Front of Train and Struck or was Struck by Second Train — 1. Yes 2. No 3. Unknown — Code: 2

41. Driver — 1. Drove around or thru the gate 2. Stopped and then proceeded 3. Did not stop 4. Stopped on crossing 5. Other *(specify)* — Code: 3

42. Driver Passed Standing Highway Vehicle — 1. Yes 2. No 3. Unknown — Code: 2

43. View of Track Obscured by *(primary obstruction)* — 1. Permanent Structure 2. Standing railroad equipment 3. Passing Train 4. Topography 5. Vegetation 6. Highway Vehicles 7. Other *(specify)* 8. Not Obstructed — Code: 8

Casualties to:	Killed	Injured
46. Highway-Rail Crossing Users	0	0
49. Railroad Employees	0	0
52. Passengers on Train	0	0

44. Driver was — 1. Killed 2. Injured 3. Uninjured — Code: 3

45. Was Driver in the Vehicle? — 1. Yes 2. No — Code: 1

47. Highway Vehicle Property Damage *(est. dollar damage)*: $500

48. Total Number of Highway-Rail Crossing Users *(include driver)*: 1

50. Total Number of People on Train *(include passengers and crew)*

51. Is a Rail Equipment Accident / Incident Report Being Filed — 1. Yes 2. No — Code: 2

53a. Special Study Block | 53b. Special Study Block

54. Narrative Description

55. Typed Name and Title | 56. Signature | 57. Date

FORM FRA F 6180.57

* NOTE THAT ALL CASUALTIES MUST BE REPORTED ON FORM FRA F 6180.55A

DEPARTMENT OF TRANSPORTATION
FEDERAL RAILROAD ADMINISTRATION (FRA)

HIGHWAY-RAIL GRADE CROSSING ACCIDENT/INCIDENT REPORT

OMB Approval No. 2130-0500

Name Of		Alphabetic Code	RR Accident/Incident No.
1. Reporting Railroad	Detroit, Toledo And Ironton RR Co. [DTI]	1a. DTI	1b. 923
2. Other Railroad Involved in Train Accident/Incident		2a.	2b.
3. Railroad Responsible for Track Maintenance	Consolidated Rail Corp. [CR]	3a. CR	3b. XXX

4. U.S. DOT-AAR Grade Crossing ID No.	5. Date of Accident/Incident	6. Time of Accident/Incident
524658J	07/17/78	11:55 PM

7. Nearest Railroad Station	8. Division	9. County	10. State Abbr.	Code
		MONTGOMERY	39	OH

11. City *(if in a city)*	12. Highway Name or No.	
MIAMISBURG	LOCK STREET	☑ Public ☐ Private

Highway User Involved

13. Type — A. Auto; B. Truck; C. Truck-trailer; D. Pick-up truck; E. Van; F. Bus; G. School Bus; H. Motorcycle; J. Other Motor Vehicle; K. Pedestrian; M. Other *(specify)* — Code: A

14. Vehicle Speed *(est. mph at impact)*

15. Direction *(geographical)* 1. North 2. South 3. East 4. West — Code: 3

16. Position 1. Stalled on crossing 2. Stopped on Crossing 3. Moving over crossing 4. Trapped — Code: 2

20a. Was the highway user and/or rail equipment involved in the impact transporting hazardous materials? 1. Highway User 2. Rail Equipment 3. Both 4. Neither — Code: 4

Rail Equipment Involved

17. Equipment 1. Train *(units pulling)* 2. Train *(units pushing)* 3. Train *(standing)* 4. Car(s) *(moving)* 5. Car(s) *(standing)* 6. Light loco(s) *(moving)* 7. Light loco(s) *(standing)* 8. Other *(specify)* A. Train pulling- RCL B. Train pushing- RCL C. Train standing- RCL — Code: 1

18. Position of Car Unit in Train: 1

19. Circumstance 1. Rail equipment struck highway user 2. Rail equipment struck by highway user — Code: 1

20b. Was there a hazardous materials release by 1. Highway User 2. Rail Equipment 3. Both 4. Neither — Code:

20c. State the name and quantity of the hazardous materials released, if any

21. Temperature *(specify if minus)* 0 °F

22. Visibility *(single entry)* 1. Dawn 2. Day 3. Dusk 4. Dark — Code: 4

23. Weather *(single entry)* 1. Clear 2. Cloudy 3. Rain 4. Fog 5. Sleet 6. Snow — Code: 1

24. Type of Equipment Consist *(single entry)* 1. Freight train 2. Passenger train 3. Commuter train 4. Work train 5. Single car 6. Cut of cars 7. Yard/Switching 8. Light loco(s) 9. Main./inspect. car A. Spec. MoW Equip — Code: 1

25. Track Type Used by Rail Equipment Involved 1. Main 2. Yard 3. Siding 4. Industry — Code: 1

26. Track Number or Name: MAIN

27. FRA Track Class

28. Number of Locomotive Units: 2

29. Number of Cars: 27

30. Consist Speed *(Recorded if available)* R. Recorded E. Estimated 30 mph — Code: E

31. Time Table Direction 1. North 2. South 3. East 4. West — Code: 1

32. Type of Crossing Warning 1. Gates 2. Cantilever FLS 3. Standard FLS 4. Wig wags 5. Hwy. traffic signals 6. Audible 7. Crossbucks 8. Stop signs 9. Watchman 10. Flagged by crew 11. Other *(specify)* 12. None

Code(s): 07

33. Signaled Crossing Warning

34. Whistle Ban 1. Yes 2. No 3. Unknown — Code:

35. Location of Warning 1. Both Sides 2. Side of Vehicle Approach 3. Opposite Side of Vehicle Approach — Code: 1

36. Crossing Warning Interconnected with Highway Signals 1. Yes 2. No 3. Unknown — Code: 2

37. Crossing Illuminated by Street Lights or Special Lights 1. Yes 2. No 3. Unknown — Code: 2

38. Driver's Age

39. Driver's Gender 1. Male 2. Female — Code:

40. Driver Drove Behind or in Front of Train and Struck or was Struck by Second Train 1. Yes 2. No 3. Unknown — Code: 2

41. Driver 1. Drove around or thru the gate 2. Stopped and then proceeded 3. Did not stop 4. Stopped on crossing 5. Other *(specify)* — Code: 4

42. Driver Passed Standing Highway Vehicle 1. Yes 2. No 3. Unknown — Code: 2

43. View of Track Obscured by *(primary obstruction)* 1. Permanent Structure 2. Standing railroad equipment 3. Passing Train 4. Topography 5. Vegetation 6. Highway Vehicles 7. Other *(specify)* 8. Not Obstructed — Code: 8

Casualties to:	Killed	Injured
46. Highway-Rail Crossing Users	0	0
49. Railroad Employees	0	0
52. Passengers on Train	0	0

44. Driver was 1. Killed 2. Injured 3. Uninjured — Code: 3

45. Was Driver in the Vehicle? 1. Yes 2. No — Code: 1

47. Highway Vehicle Property Damage *(est. dollar damage)* $150

48. Total Number of Highway-Rail Crossing Users *(include driver)* 2

50. Total Number of People on Train *(include passengers and crew)*

51. Is a Rail Equipment Accident / Incident Report Being Filed 1. Yes 2. No — Code:

53a. Special Study Block

53b. Special Study Block

54. Narrative Description

55. Typed Name and Title

56. Signature

57. Date

FORM FRA F 6180.57

* NOTE THAT ALL CASUALTIES MUST BE REPORTED ON FORM FRA F 6180.55A

DEPARTMENT OF TRANSPORTATION
FEDERAL RAILROAD ADMINISTRATION (FRA)

HIGHWAY-RAIL GRADE CROSSING ACCIDENT/INCIDENT REPORT

OMB Approval No. 2130-0500

Name Of		Alphabetic Code	RR Accident/Incident No.
1. Reporting Railroad	Consolidated Rail Corp. [CR]	1a. CR	1b. 0820308
2. Other Railroad Involved in Train Accident/Incident		2a.	2b.
3. Railroad Responsible for Track Maintenance	Consolidated Rail Corp. [CR]	3a. CR	3b. 0820308

4. U.S. DOT-AAR Grade Crossing ID No. **524658J** | 5. Date of Accident/Incident 07/26/77 | 6. Time of Accident/Incident 01:30 PM

7. Nearest Railroad Station: MIAMISBURG | 8. Division: | 9. County: MONTGOMERY | 10. State Abbr. 39 Code OH

11. City (if in a city) MIAMISBURG | 12. Highway Name or No. LOCK STREET CROSSING | ☑ Public ☐ Private

Highway User Involved

13. Type — A. Auto, B. Truck, C. Truck-trailer, D. Pick-up truck, E. Van, F. Bus, G. School Bus, H. Motorcycle, J. Other Motor Vehicle, K. Pedestrian, M. Other (specify) — Code: B

14. Vehicle Speed (est. mph at impact): 0

15. Direction (geographical): 1. North 2. South 3. East 4. West — Code: 4

16. Position: 1. Stalled on crossing 2. Stopped on Crossing 3. Moving over crossing 4. Trapped — Code: 1

20a. Was the highway user and/or rail equipment involved in the impact transporting hazardous materials? 1. Highway User 2. Rail Equipment 3. Both 4. Neither — Code: 2

Rail Equipment Involved

17. Equipment — 1. Train (units pulling) 2. Train (units pushing) 3. Train (standing) 4. Car(s) (moving) 5. Car(s) (standing) 6. Light loco(s) (moving) 7. Light loco(s) (standing) 8. Other (specify) A. Train pulling- RCL B. Train pushing- RCL C. Train standing- RCL — Code: 1

18. Position of Car Unit in Train: 1

19. Circumstance: 1. Rail equipment struck highway user 2. Rail equipment struck by highway user — Code: 1

20b. Was there a hazardous materials release by: 1. Highway User 2. Rail Equipment 3. Both 4. Neither — Code:

20c. State the name and quantity of the hazardous materials released, if any

21. Temperature (specify if minus): 80 °F

22. Visibility (single entry): 1. Dawn 2. Day 3. Dusk 4. Dark — Code: 2

23. Weather (single entry): 1. Clear 2. Cloudy 3. Rain 4. Fog 5. Sleet 6. Snow — Code: 1

24. Type of Equipment Consist (single entry): 1. Freight train 2. Passenger train 3. Commuter train 4. Work train 5. Single car 6. Cut of cars 7. Yard/Switching 8. Light loco(s) 9. Main./inspect. car A. Spec. MoW Equip — Code: 1

25. Track Type Used by Rail Equipment Involved: 1. Main 2. Yard 3. Siding 4. Industry — Code: 1

26. Track Number or Name: NO 1 EAST BOUND MAIN

27. FRA Track Class: 2

28. Number of Locomotive Units: 2

29. Number of Cars: 53

30. Consist Speed (Recorded if available): R. Recorded E. Estimated 22 mph — Code: E

31. Time Table Direction: 1. North 2. South 3. East 4. West — Code: 3

32. Type of Crossing Warning: 1. Gates 2. Cantilever FLS 3. Standard FLS 4. Wig wags 5. Hwy. traffic signals 6. Audible 7. Crossbucks 8. Stop signs 9. Watchman 10. Flagged by crew 11. Other (specify) 12. None

Code(s): 03

33. Signaled Crossing Warning: 20 sec warn min (1);

34. Whistle Ban: 1. Yes 2. No 3. Unknown — Code:

35. Location of Warning: 1. Both Sides 2. Side of Vehicle Approach 3. Opposite Side of Vehicle Approach — Code: 1

36. Crossing Warning Interconnected with Highway Signals: 1. Yes 2. No 3. Unknown — Code: 3

37. Crossing Illuminated by Street Lights or Special Lights: 1. Yes 2. No 3. Unknown — Code:

38. Driver's Age:

39. Driver's Gender: 1. Male 2. Female — Code:

40. Driver Drove Behind or in Front of Train and Struck or was Struck by Second Train: 1. Yes 2. No 3. Unknown — Code: 2

41. Driver: 1. Drove around or thru the gate 2. Stopped and then proceeded 3. Did not stop 4. Stopped on crossing 5. Other (specify) — Code: 4

42. Driver Passed Standing Highway Vehicle: 1. Yes 2. No 3. Unknown — Code: 2

43. View of Track Obscured by (primary obstruction): 1. Permanent Structure 2. Standing railroad equipment 3. Passing Train 4. Topography 5. Vegetation 6. Highway Vehicles 7. Other (specify) 8. Not Obstructed — Code: 8

Casualties to:	Killed	Injured
46. Highway-Rail Crossing Users	0	0
49. Railroad Employees	0	0
52. Passengers on Train	0	0

44. Driver was: 1. Killed 2. Injured 3. Uninjured — Code: 3

45. Was Driver in the Vehicle? 1. Yes 2. No — Code: 2

47. Highway Vehicle Property Damage (est. dollar damage): $1,500

48. Total Number of Highway-Rail Crossing Users (include driver): 0

50. Total Number of People on Train (include passengers and crew):

51. Is a Rail Equipment Accident / Incident Report Being Filed: 1. Yes 2. No — Code: 2

53a. Special Study Block | 53b. Special Study Block

54. Narrative Description

55. Typed Name and Title | 56. Signature | 57. Date

FORM FRA F 6180.57

* NOTE THAT ALL CASUALTIES MUST BE REPORTED ON FORM FRA F 6180.55A

Ohio Rail Development Commission
1980 W. Broad Street, 2nd Floor
Columbus, OH 43223

Diagnostic Review Team Survey

Date: 9.23.11

Location Data

Street or Road Name:	Central Ave.		
Route/Road Number (i.e. Twp., Co., SR or US)	SR 725-11.58	AAR-DOT No.:	524654G
County: Montgomery	Township:	City: (In or Near)	Miamisburg
Railroad Name: Norfolk Southern (NS)	Railroad Division: Dearborn	Branch/Line Name:	Cincinnati LI
Nearest RR Timetable Station: Miamisburg		RR Milepost:	218.3

On-Site Review Team

(Include: Name – Organization – Phone Number)

1. TIM PERKINS ORDC 614-644-0284
2. Matt Malich ORDC 614-387-5162
3. GEORGE MARTIN PUCO 614-752-9107
4. Derrick Drake NS 304-712-0326
5. DAVE BOWIN CITY OF MIAMISBURG 937-847-6639
6. BILL STANLEY CITY OF MIAMISBURG 937 847-6531
7.
8.
9.
10.
11.
12.
13.

Existing Traffic Control Devices

Type of Warning Devices	Installed?		Quantity/Comments
Advance Warning Signs	☐ Yes	☑ No	
'Stop' Signs	☐ Yes	☑ No	
'Stop Ahead' Signs	☐ Yes	☑ No	
Pavement Markings	☑ Yes	☐ No	
Crossbucks	☐ Yes	☐ No	
Number of Tracks Signs	☑ Yes	☐ No	
Inventory Tags	☑ Yes	☐ No	
Interconnected Highway Traffic Signal	☐ Yes	☑ No	
Mast-Mounted Flashing Lights	☑ Yes	☐ No	
Cantilever Flashing Lights	☐ Yes	☑ No	Number: Length:
Side Lights	☐ Yes	☑ No	
Automatic Gates	☑ Yes	☐ No	Number: Length:
Bells	☑ Yes	☐ No	

Sidewalk Gate Arms	☐ Yes ☑ No	
'No Turn' Signs	☐ Yes ☑ No	
Illumination	☑ Yes ☐ No	
Is crossing flagged by train crew?	☐ Yes ☑ No	
Other	☐ Yes ☑ No	

Safety Data (Obtain crash reports, if possible, prior to review)

	Initial Information (from database)	Revised
Number & dates of crashes in previous 5 years	0	
Hazard Ranking	614 Date Run: 8/19/2011	

Railroad Data

Railroad Characteristics	Initial Information (from database)	Revised
Total trains per day	18	
< 1 per day		
Day thru trains	6	
Night thru trains	10	
Daytime switching movements	2	
Nighttime switching movements	0	
Total number of tracks	2	
Number of main tracks	2	
Number of other tracks	0	
Maximum train speed	45	
Typical train speed		
Amtrak		

If non-gated crossing, is clearing sight distance adequate in all quadrants? (See Table 1) ☐ Yes ☐ No

If multiple tracks, can two trains occupy crossing at the same time? ☑ Yes ☐ No

Can one train block the motorists' view of another train at crossing? ☑ Yes (Explain below) ☐ No

Are there other track(s) crossing this same roadway within 100 ft of this crossing? ☐ Yes ☑ No

If yes, Crossing DOT #(if different) _____

If yes, distance _____ (take measurement between track centerlines at closest point along roadway)

Roadway Data

Local Highway Authority: City of Miamisburg

Roadway Characteristics	Initial Information (from database)	Revised
Average daily traffic	12570	
Highway paved	☒ Yes ☐ No	☐ Yes ☐ No

Roadway Surface: ☒ Blacktop ☐ Gravel ☐ Concrete ☐ Other _____

Roadway width: _____ ft.

Number of highway lanes	3	
Urban or Rural	Urban	
Vehicle Speed: 25 MPH		

School Bus Operation: ☐ No ☑ Yes _____ Amount

Hazardous Materials Trucks: ☑ No ☑ Yes _____ Amount

Shoulders: ☑ No ☐ Yes

Is the shoulder surfaced? ☑ No ☐ Yes

Is there existing guardrail along roadway in crossing vicinity? ☑ No ☐ Yes

Is stopping site distance adequate? (See Table 2) ☑ Yes ☐ No If no, deficient approach(es) _____

Quadrant NE Curb and Gutter:	Quadrant SW Curb and Gutter:
☑ Functional (Curb height = 4" or more)	☐ Functional (Curb height = 4" or more)
☐ Non-functional (Curb height = Less than 4")	☑ Non-functional (Curb height = Less than 4")
☐ None	☐ None

Pedestrians: ☐ No ☑ Yes

Is sidewalk present? ☐ No ☑ Yes

Is there a nearby intersection that could cause queuing over the crossing? ☑ No ☐ Yes

If yes,

Distance _____

Is this intersection signalized? ☑ No ☐ Yes

Are the signals currently interconnected with the existing crossing warning devices? ☑ No ☐ Yes

Is it the consensus of the Diagnostic Review Team that this is a potential closure project: ☐ No ☐ Yes

Explain reasons:

Type of Development

☐ Open Space	☐ Institutional	Location of nearby schools:
☐ Industrial	☑ Commercial	
☐ Residential		

Utility Information

Is commercial power available? ☐ No ☑ Yes

Utility Provider (Company Name) Dayton P+L Phone Number _____

Nearest Available Power Source _____

What other utilities are present? _____

Is there potential utility conflict(s) ☑ Yes ☐ No ☐ Unknown

Diagnostic Team Recommendations

	Quadrants Needed
☐ Install/upgrade active devices	
☐ Automatic Flashing Lights (AFLS)	
☐ AFLS /Cants	
☐ AFLS / Gates	
☐ AFLS / Gates / Cants	
☐ Upgrade circuitry	
☐ Sidelights	
☐ Guardrail Needed	
☐ Install/Replace curb	
☐ Other (define)	

Comments: NE quad, City to verify underground trunk lines, NS to verify right-of-way for control case. Pole relocation with DP+L

☐ Install/upgrade traffic signal preemption	
☐ No improvements needed	

☐ Other (define)	

Acknowledgement of Recommendations (each entity represented at the diagnostic must have at least one signature acknowledgement):

Jim Perkins	Clay Martin	[illegible]
Dave Bowlin	[illegible]	[illegible]

Field Dimensions

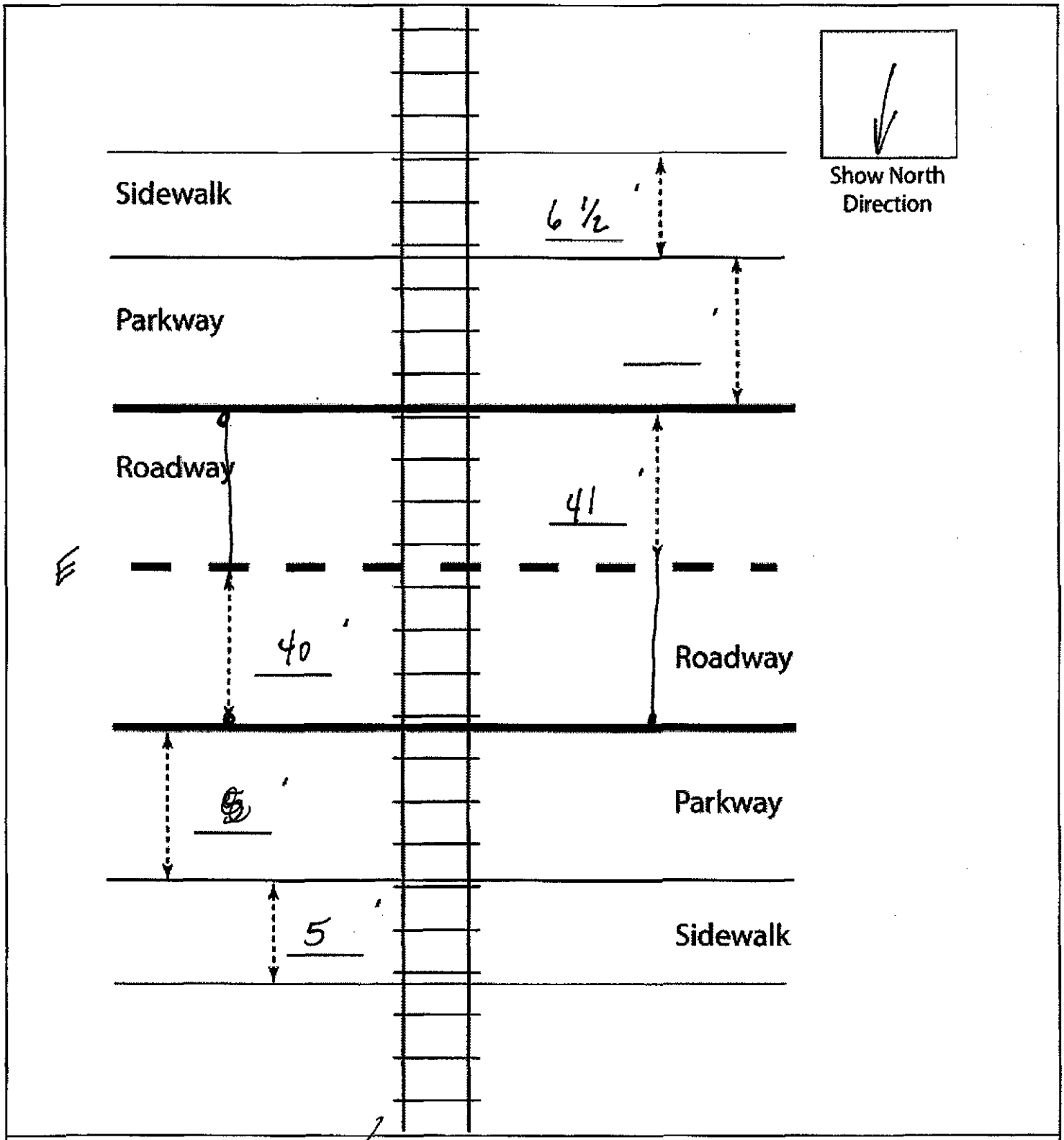

Crossing Angle ☐ 0-29° ☐ 30-59° ☑ 60-90° Measured in _____ Quadrant? .

Measurements by: MM

UPDATED (12/2006)

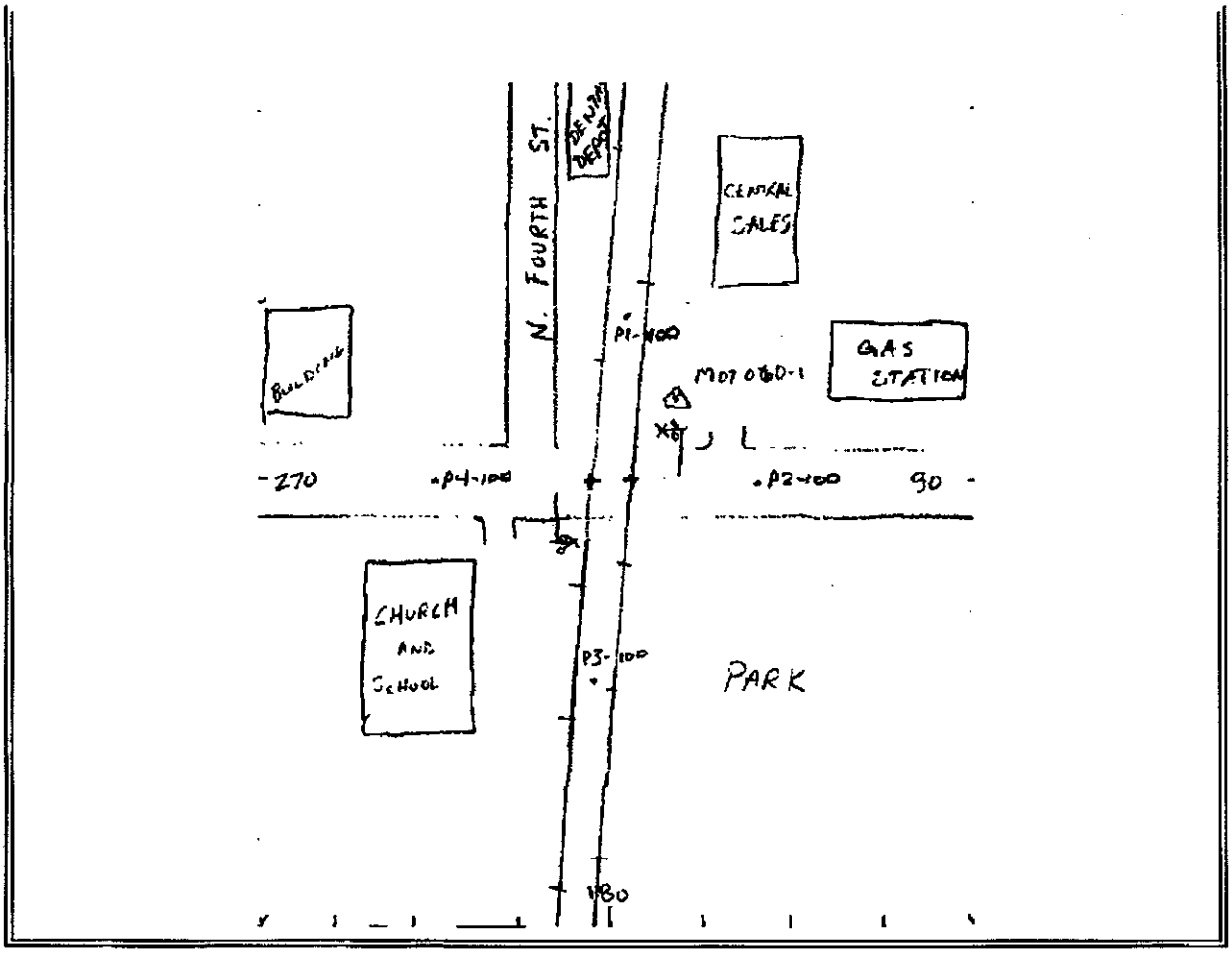
N. FOURTH ST.
CENTRAL SALES
GAS STATION
CHURCH AND SCHOOL
PARK
270
90
180

Back to Top

Field Sketch

Crossing Angle ☐ 0-29° ☐ 30-59° ☐ 60-90° Measured in _____ Quadrant?

Sketch by: _____

TABLE 1

Clearing Sight Distances

Maximum Authorized Train Speed	Distance (dT) Along Railroad from Crossing (ft)
1 - 10	240
15	360
20	480
25	600
30	720
35	840
40	960
45	1080
50	1200
55	1320
60	1440
65	1560
70	1680
75	1800
80	1920
85	2040
90	2160

Source: R-H Grade Crossing Handbook Table 36 (pp. 132-133)

Notes:

All calculated distances are rounded up to the next higher 5-foot increment.

Distances indicated are for 65-ft double bottom semi-tractor trailers and level single track 90 degree crossings; and may need to be adjusted for multiple tracks, skewed crossings or approaches on grades.

Clearing Sight Distance is to be measured in each vehicle travel direction at non-gated crossings as viewed from a point 25 feet from centerline of nearest track in the center of whichever travel lane is nearest the direction along track being measured.

Table 2

Stopping Sight Distances

Highway Vehicle Speed	Distance (dH) Along Roadway from Crossing (ft)
0	n/a
5	50
10	70
15	105
20	135
25	180
30	225
35	280
40	340
45	410
50	490
55	570
60	660
65	760
70	865

Source: R-H Grade Crossing Handbook Table 36 (pp. 132-133)

Notes:

All calculated distances are rounded up to the next higher 5-foot increment.

Distances indicated are for 65-ft double bottom semi-tractor trailers on dry level pavements.

Stopping Sight Distance is to be measured on each roadway approach to crossing from stop bar.

24-Aug-12

Detailed Estimate for Grade Crossing Warning Devices

City/State: MIAMISBURG, OH
MilePost: CJ-217.5
State Proj. No.:
S&E Proj. No.: 10.1376
Man Days: 148

Road: RICHARD ST.
DOT/AAR: 524649K
County: MONTGOMERY
File Number: 061-10.1016

*****Purchases - Others*****		
Meals and Lodging:	$19,891.20	
Rental of Equipment:	$20,720.00	
(2 Trucks, 1 Backhoe w/ Trailer and 1 Pipe-Pusher for 37 Days)		
Construction Supervision Vehicle:	$3,702.58	
Purchases - Other Total:		$44,313.78
*****Material And Additives*****		
Material Cost:	$141,894.00	
Sales and Use Tax:	$0.00	
Material Handling Freight:	$7,094.69	
Material Total:		$148,988.69
*****Labor And Additives*****		
Labor Cost:	$41,440.00	
(4 man crew at $1,120.00 a day for: 37 days)		
Payroll Tax & Overheads:	$55,048.90	
Preliminary Engineering:	$16,133.37	
Construction Supervision:	$11,698.51	
Labor Total:		$124,320.78
	Project Cost:	$317,623.25
	Scrap / Salvage Credit:	$0.00
	Project Total:	**$317,623.00**

Estimated on: 24-Aug-12

Estimated by: bf2cc

Estimate valid for 1 year from date of estimate

Norfolk Southern Railway

Highway Crossing Signalization Program - Material List

Do not substitute items without permission from S & E Engineering

City:	MIAMISBURG
Road:	RICHARD ST.
Mile Post:	CJ-217.5
Drawing Number:	82112174
State ProjectNumber:	
County:	MONTGOMERY
A A R Number:	524649K
Project Number:	10.1376
File Number:	061-10.1016
New File Number:	CX0117929
WBS:	F-00168-27-1
Store Number:	
Supervisor:	D.R. DRAKE
Tax Code:	

Vendor to supply the following copies after pricing:

1 Set - Material Management with original Invoice
2 Sets - with plans shipped in car with material
1 Set - S&EGen. Supt. Construction w/copy of invoice

Location: MIAMISBURG OH S&E Proj. No.: 10.1376 AFE No.: F-00168-27-1 Drawing No.: 82112174

Store No.: P.O.Number: Date Required: Date Shipped: Vendor: Xorail

Qty.	Class-Item-CD	UI	Price per Item	Total Price	Item Description	Quantity Shipped	Quantity Installed Date Quan.	Date Quan.	Date Quan.	Quantity Returned (Credit)	Special Instructions
3	670-360693-4	EA	$5.55	$16.65	AAR/DOT NUMBER PLATE/DECAL, ORDER 3 PER PROJECT. 60 DAY LEAD TIME. SUPPLIED BY S'TRAN.						
1	165-006505-4	EA	$1,075.23	$1,075.23	AC SERVICE, COMPLETE LESS METER BASE, ASSEMBLED ON 30' POLE						
12	670-119241-4	EA	$25.01	$300.12	ARRESTOR, LIGHTNING HEAVY DUTY CLEAR VIEW SAFETRAN 022585-1X						
13	105-288384-4	EA	$271.16	$3,525.08	BATTERY,GNB 368AH MODEL 50G15 SINGLE CELL 2.25 VOLTS, FOR USE WITH CROSSINGS DESIGNED AFTER 09/09						
2	670-980689-4	EA	$75.48	$150.96	BRACKET HIGH WIND, (RIGID 3'), WIG- 191036, WALRUS TUSK TYPE						
2	670-561375-4	EA	$1,208.79	$2,417.58	BRACKET, GATE SAVER, NEG385102GS, SPRING LOADED SWING AWAY ADAPTER FOR FIBERGLASS/ALUMINUM GATES, USE WITH GATE 38' AND LESS						
1	670-356949-4	EA	$90.00	$90.00	CABLE, 10' GENERATOR HOOK UP, SERRMI P/N 40524. FEMALE CONNECTOR						
350	465-939422-4	LF	$2.92	$1,022.00	CABLE, UG 12 CONDUCTOR NO 14 AWG SOLID EACH CONDUCTOR WITH 5/64 IN INSULATION 10 MIL						
1500	465-939422-4	LF	$2.92	$4,380.00	CABLE, UG 12 CONDUCTOR NO 14 AWG SOLID EACH CONDUCTOR WITH 5/64 IN INSULATION 10 MIL						
1000	465-292862-4	LF	$1.36	$1,360.00	CABLE, UG 2-6 TWISTED, S-23 OKONITE 113-12-3933 SOLID TINNED CONDUCTOR						
350	465-292929-4	LF	$4.13	$1,445.50	CABLE, UG 5 COND. NO. 6 AWG SOLID COPPER CABLE TO MEET NS CORP. SPEC. FOR SIGNAL						
350	465-791835-4	FT	$3.54	$1,239.00	CABLE, UG AC ENTRANCE 3C#6-7X OKONITE FMPF-L 094-078 TR W/G 1 X 8 7X W010 BRZ TAPE 600V PRODUCT CODE 206-11-6070						
80	165-544477-4	FT	$2.61	$208.80	CONDUIT, 4"x10' PVC, SCHEDULE 80 BELL CONNECTOR AT ONE END, 1/2 PT. GLUE IN KIT 670-123298-4						
10	670-664917-4	EA	$90.11	$901.10	CONNECTOR KIT, WELDED FAR RAIL, CONSISTING OF RUBBER HOSE PROPERLY DRILLED, BONDSTRAND, 1 SPLICING SLEEVE, 1 REDUCING SLEEVE, 3 CLAMPS, 1 TRACK CLIP, 1 WEB WELDED TRACK CONNECTOR, 1 WELD METAL, SAFETRAN 111359-2X						

APPROVED BY STATE	APPROVED BY RAILROAD	CAR NUMBER	SEAL NUMBER

Location: MIAMISBURG OH S&E Proj. No.: 10.1376 AFE No.: F-00168-27-1 Drawing No.: 82112174

Store No.: P.O.Number: Date Required: Date Shipped: Vendor: Xorail

Qty.	Class-Item-CD	UI	Price per Item	Total Price	Item Description	Quantity Shipped	Quantity Installed Date Quan.	Date Quan.	Date Quan.	Quantity Returned (Credit)	Special Instructions
10	670-632520-4	EA	$79.69	$796.90	CONNECTOR KIT, WELDED NEAR RAIL, CONSISTING OF, RUBBER HOSE PROPERLY DRILLED, BONDSTRAND, SPLICING SLEEVE, 1 REDUCING SLEEVE, 5 CLAMPS, 1 TRACK CLIP, 1 WEB WELDED TRACK CONNECTOR, 1 WELD METAL, SAFETRAN 111359-1X						
2	670-793404-4	EA	$1,159.00	$2,318.00	COUNTERWEIGHT PKAGE, 17-24'GATE S'TRAN S- MECH ONLY, STAINLESS, TO INCLUDE HUB, SUPPORT ARMS						
2	670-372890-4	EA	$854.89	$1,709.78	COUPLER, BIDIRECTIONAL SIMULATION S'TRAN # 62664-348						
2	670-340443-4	EA	$824.07	$1,648.14	COUPLER, BIDIRECTIONAL SIMULATION S'TRAN# 62664-211						
4	670-760012-4	EA	$44.32	$177.28	COVER, FOR 1 WAY FLASHING LIGHT ASSY. 18 OZ. BLACK VINYL COATED NYLON. ====TO COVER 2 LAMPS====						
1	670-986650-4	EA	$354.27	$354.27	DISPOSAL, CONSTRUCTION DEBRIS AND CLEANING X'ING EQUIPMENT CONTAINER						
2	670-228165-4	EA	$12.25	$24.50	EQUALIZER, SAFETRAN 022700-1X LESS BASE, MODERN NO. 700-1 SHUNT ARRESTER TRACK CIRCUITS CR 02-197950						
1	670-000004-4	EA	$700.00	$700.00	FCC LICENSE FOR MONITOR/RADIO						
2	670-000003-4	EA	$255.85	$511.70	FILL/STONE #57, QUANITY IS BASED ON TRUCK LOAD PLUS DELIVERY COST						
2	670-015231-4	EA	$599.40	$1,198.80	FOUNDATION, DIXIE,S-2 GATE 2'6"X2'6"X5'6" ASSEMBLED						
2	670-257031-4	EA	$422.36	$844.72	GATE ARM, FIBERGLASS-ALUMINUM, 17-24 FT, INCLUDES GATE GUARD FOR GATE LIGHT CABLE. HIGH INTENSITY VERTICAL STRIPES. NEG P/N 8003-244NFS/CG, SSC T18115						
1	670-700057-4	EA	$62,411.64	$62,411.64	GCP4000 - 3 TRK (6TC) - REDUNDANT - 40/40 AMP WIRED RACK EQUIP. FOR 6X8 XING SHELTER, (INCL. 6 TRK CHASSIS A80460, 6 TRK MODS. A80418, 2-SSCC A80405, 2 CPU A80403, 1 SEAR A80410, 1 DISPLAY A80407, 1 TRANS MOD. A80468, 2-40 AMP CHARGERS) IPN: 003131-6X						
2	670-396564-4	EA	$3,430.68	$6,861.36	GCP4000 - MODULE - TRACK MODULE - IPN: A80418						
2	670-135634-4	EA	$202.65	$405.30	GEO, A53252 TRACK NOISE SUPPRESSION FILTER, SAFETRAN P/N 9000-53252-0001						
1	670-477991-4	EA	$410.00	$410.00	KIT, GROUNDING ASSY FOR AL I/S INCLUDES 8 GRD RDS,200'#4WIRE,12 4 WIRE ONE-SHOTS. ERICO SBK206						

APPROVED BY STATE	APPROVED BY RAILROAD	CAR NUMBER	SEAL NUMBER

Location: MIAMISBURG OH S&E Proj. No.: 10.1376 AFE No.: F-00168-27-1 Drawing No.: 82112174

Store No.: P.O.Number: Date Required: Date Shipped: Vendor: Xorail

Qty.	Class-Item-CD	UI	Price per Item	Total Price	Item Description	Quantity Shipped	Quantity Installed Date Quan.	Date Quan.	Date Quan.	Quantity Returned (Credit)	Special Instructions
1	670-123298-4	EA	$345.97	$345.97	KIT, HARDWARE SUPPLIES REQUIRED X'ING P'CKAGES. WEB CONNECTORS FOR SHUNT(8EA) TAPE, AMPS,P'GUM PAINT,SLEEVES,TAGS,GLUE, 100 EA WHITE TAGS,)NE CAN BLUE MARKING PAINT ETC...						
2	670-764166-4	EA	$1,240.19	$2,480.38	LAMP ASSY, 5" MAST MTG. 2W IND. 20" BKGRD, FLX-12 W/BULB S'TRAN #042003-487XNS						
6	165-643547-4	EA	$5.97	$35.82	LAMP, 18 WATT 10 VOLT S-11 SC BAY 18S11/1SC CLEAR RWY SIGNAL UJ-71463 GE						
12	670-440826-4	EA	$2.22	$26.64	LINK, SAFETRAN 024620-1X INSL TESTING COMP 1 IN CENTER SIGNAL CIRCUITS CR 02-286662						
4	255-590880-4	EA	$16.72	$66.88	LOCK, AMERICAN LOCK MODEL H-10KA KEYED ALIKE TO PRIVATE KEYWAY D456 AND STAMPED "NS SIG"						
2	670-637778-4	EA	$1,325.00	$2,650.00	MAST, 5" ALUMINUM 13'10" WITH DOUBLE JCT. BOX BASE. S'TRAN P# 070519-11AX.						
2	670-850933-4	EA	$3,925.01	$7,850.02	MECHANISM, GATE MODEL S-60, WITH DEFROSTER AND MINI TRACKSIDE SENSOR S'TRAN # 0740007-X002B3						
3	670-000001-4	EA	$726.23	$2,178.69	MISC. EXPENSE, MATERAIL/FILL						
2	670-000007-4	EA	$307.02	$614.04	MISC. EXPENSE, TRACK WORK (I.E. INS JTS, RODS, ETC.)						
1	000-000000-4	EA	$5,000.00	$5,000.00	MISC. EXPENSE, UNDERGROUND BORING						
2	670-071254-4	EA	$963.67	$1,927.34	MODULE, GEO TRACK CARD A53285						
4	670-001347-4	EA	$57.10	$228.40	PACKAGE, HARDWARE SIGN 5 IN. MOUNTING, SERRMI A1250-5, HARMON @200965-000, OR						
1	255-646807-4	EA	$31.19	$31.19	PADLOCK, SAFETRAN PART NO. 030399-29X SCREW TYPE FOR CIR CONTROLLER AND BTY. BOX						
1	670-514605-4	EA	$11.11	$11.11	PINNACLE, W-C SECT 1-11, 4"& 5" REF K1 110-8 OR SAFETRAN NO. @035045-503X						
4	670-259211-4	EA	$47.25	$189.00	PLUG BOARD KIT, TYPE B-1 & VOLTAGE TEST TERMINAL, SAFETRAN 420000-75X						
2	165-103293-4	EA	$75.42	$150.84	PROTECTOR, LIGHTNING & SURGE LPC 10560-51, 3 ELECTRODE WITH SPADE TERMINAL						
1	165-902002-4	EA	$303.43	$303.43	PROTECTOR, SURGE 120/240VAC, ERICO P/N EPD120/240TDFL						

APPROVED BY STATE	APPROVED BY RAILROAD	CAR NUMBER	SEAL NUMBER

Location: MIAMISBURG OH S&E Proj. No.: 10.1376 AFE No.: F-00168-27-1 Drawing No.: 82112174

Store No.: P.O.Number: Date Required: Date Shipped: Vendor: Xorail

Qty.	Class-Item-CD	UI	Price per Item	Total Price	Item Description	Quantity Shipped	Quantity Installed Date Quan.	Date Quan.	Date Quan.	Quantity Returned (Credit)	Special Instructions
5	465-002899-4	EA	$40.24	$201.20	REEL, CABLE DISPOSABLE FOR CROSSING SIGNAL PACKAGES						
4	670-742096-4	EA	$43.68	$174.72	RELAY INTERFACE PROBE, ULTRATECH PN 16031-00						
1	670-024861-4	EA	$437.35	$437.35	RELAY RACK, SWING, FARADAY SHELTER FOR EIGHT B1 RELAYS, SAFETRAN P/N 057883-1X						
4	670-707995-4	EA	$510.12	$2,040.48	RELAY, TYPE B1, NEV LINE, 900 OHMS,.008 AMPERES GRS A62-308 OR SAFETRAN @400003						
2	435-805560-4	EA	$2.78	$5.56	SAND, 25LB BAG FOR CABLE ENTRANCE INTO THE SHELTER						
1	670-027556-4	EA	$2,629.77	$2,629.77	SEARIIi, ACCESSORY PACKAGE, W/2-ILOD, 1-E-BELL, 2-GTS, 1-GFT, 1-VHFC, WITHOUT MTSS/SEAR UNIT						
1	670-749325-4	EA	$226.97	$226.97	SHELF, FOLDING, FOR LAPTOP USE IN FARADAY 6X8 SHELTER, SAFETRAN 052852-128X						
1	670-756057-4	EA	$9,808.80	$9,808.80	SHELTER, 6'X8' ALUMN FARADAY W/CABLE CHUTES BEHIND TERMINAL BOARD, W /2EA EQUIPMENT RACKS, W/GEN RECEPTICAL, BREAKER BOX, GFI OUTLET FOR LAPTOP SHELF SAFETRAN 058400-68-86						
4	670-586967-4	EA	$42.98	$171.92	SHUNT COVER W/LAG SCREWS, 19"X19", SERRMI #40271, ORDER 1 PER SHUNT						
4	670-652773-4	EA	$460.98	$1,843.92	SHUNT, MULTI-FREQ. #62775-1543 SAFETRAN NARROW BAND						
2	670-393331-4	EA	$37.43	$74.86	SIGN CROSSING MALFUNCTION ASSEMBLY FOR 4" AND 5" MAST, SAFETRAN #T17215						
2	670-554843-4	EA	$77.05	$154.10	SIGN, 2 TRACK SIGN, HIGH INTENSITY, SAFETRAN #035207-2HX						
2	670-016346-4	EA	$143.23	$286.46	SIGN, X-BUCK, HI-INTENSIVE REFLECTIVE FRT. & BACK FOR ALL STATES, SAFETRAN# 035200-91X						
2	670-330382-4	RL	$18.06	$36.12	TAPE, THOR 3" DURATEC, ORANGE 1000' LENGTHS. "WARNING STOP DIGGING"						
16	670-478560-4	EA	$20.56	$328.96	TERMINAL BLOCK, ERICO 4 POST P/N B2700A2C1WH W/HARDWARE LESS LIGHTNING ARRESTOR						
4	610-065626-4	EA	$18.18	$72.72	ULTRA-TECH 15206-01 CONNECTIVITY BLOCK FOR GRS B1 RELAY						
5	670-007238-4	EA	$117.04	$585.20	UNIT, THE INSTALLATION AND WIRING OF A DEVICE WHICH REQUIRE A MINIMUM OF FOUR WIRE CONNECT-						

APPROVED BY STATE	APPROVED BY RAILROAD	CAR NUMBER	SEAL NUMBER

Location: MIAMISBURG OH S&E Proj. No.: 10.1376 AFE No.: F-00168-27-1 Drawing No.: 82112174

Store No.: P.O.Number: Date Required: Date Shipped: Vendor: Xorail

Qty.	Class-Item-CD	UI	Price per Item	Total Price	Item Description	Quantity Shipped	Quantity Installed Date Quan.	Date Quan.	Date Quan.	Quantity Returned (Credit)	Special Instructions
500	465-999111-4	LF	$0.38	$190.00	WIRE, NO.10, 1 CONDUCTOR, CASE, FLEXIBLE 37 STRAND, 3/64 IN. INSULATION-ORDER EXT.AMT. NEEDED CR 02-620502						
1	450-986008-4	EA	$30.45	$30.45	WRENCH, TEST POST TYPE B DWG 55393-3, GR.1						

Total Material: $141,893.72

APPROVED BY STATE	APPROVED BY RAILROAD	CAR NUMBER	SEAL NUMBER

SH. NO.	CONTENTS
NX1	INDEX SHEET
1	LAYOUT
2	PROFILE
3	CABLE PLAN
4	LOAD CENTER WIRING
5	B12 & B16 RECTIFIER HOOK-UP
6	4000 GCP 6-TK CHASSIS & MODULE LAYOUT
7	4000 GCP 6-TK CHASSIS & MODULE LAYOUT
8	4000 GCP PROGRAMMING SETUP
9	4000 GCP PROGRAMMING SETUP
10	CONNECTORS FOR MODULES (A80418)
11	CONNECTORS FOR MODULES (A80418)
12	CPU MODULE,SEAR III, GFT & VHF HOOK-UPS
13	SEAR III PROGRAMMING SETUP
14	CONNECTORS FOR SSCC#1 MODULE, ILOD#1 HOOK-UP
15	CONNECTORS FOR SSCC#2 MODULE, ILOD#2 HOOK-UP
16	BIDIRECTIONAL SIMULATION COUPLER HOOK-UP
17	"A" FLASHER AND GATE LIGHTS
18	"B" FLASHER AND GATE LIGHTS
19	BACKBOARD DETAIL - 1A & 1B
20	REAR BACKBOARD DETAIL - 1A & 1B
21	FARADAY SHIELD DETAIL - 1A & 1B
22	FARADAY SHIELD DETAIL - 1C
23	6'X8' HOUSE - SIDE "C"
24	6'X8' HOUSE - SIDE "A"
25	6'X8' HOUSE (SIDE "B" & TOP VIEW)

IN SERVICE_____ SIGNED _____ DATE

☐ S&E ENGINEERING COPY
☐ CONSTRUCTION OFFICE COPY
RETURN TO S&E ENG. AFTER COMPLETION
☐ FIELD COPY
RETURN TO CASE AFTER COMPLETION
☐ PROJECT ENGINEER COPY

PROJECT #10.1376

INDEX SHEET

FILE No. CX0117929

DESIGNED BY:	
JLM	06-28-12
DRAWN BY:	
XRL	06-28-12
CHECKED BY:	
PEH	07-25-12
IN SERVICE:	
	- -

NORFOLK SOUTHERN

OFFICE OF ASS'T. VICE PRESIDENT COMM. & SIGNAL, ATLANTA, GA.

M.P.: CJ-217.50

MIAMISBURG, OH
FLGS AT RICHARD ST

DAYTON DISTRICT

FILE No. R-

CADD or DWG. No. 82112174.NX1

SHEET No. 1 of 1

REVISION INITIALS

PROPERTY
PENNSYLVANIA R.R.

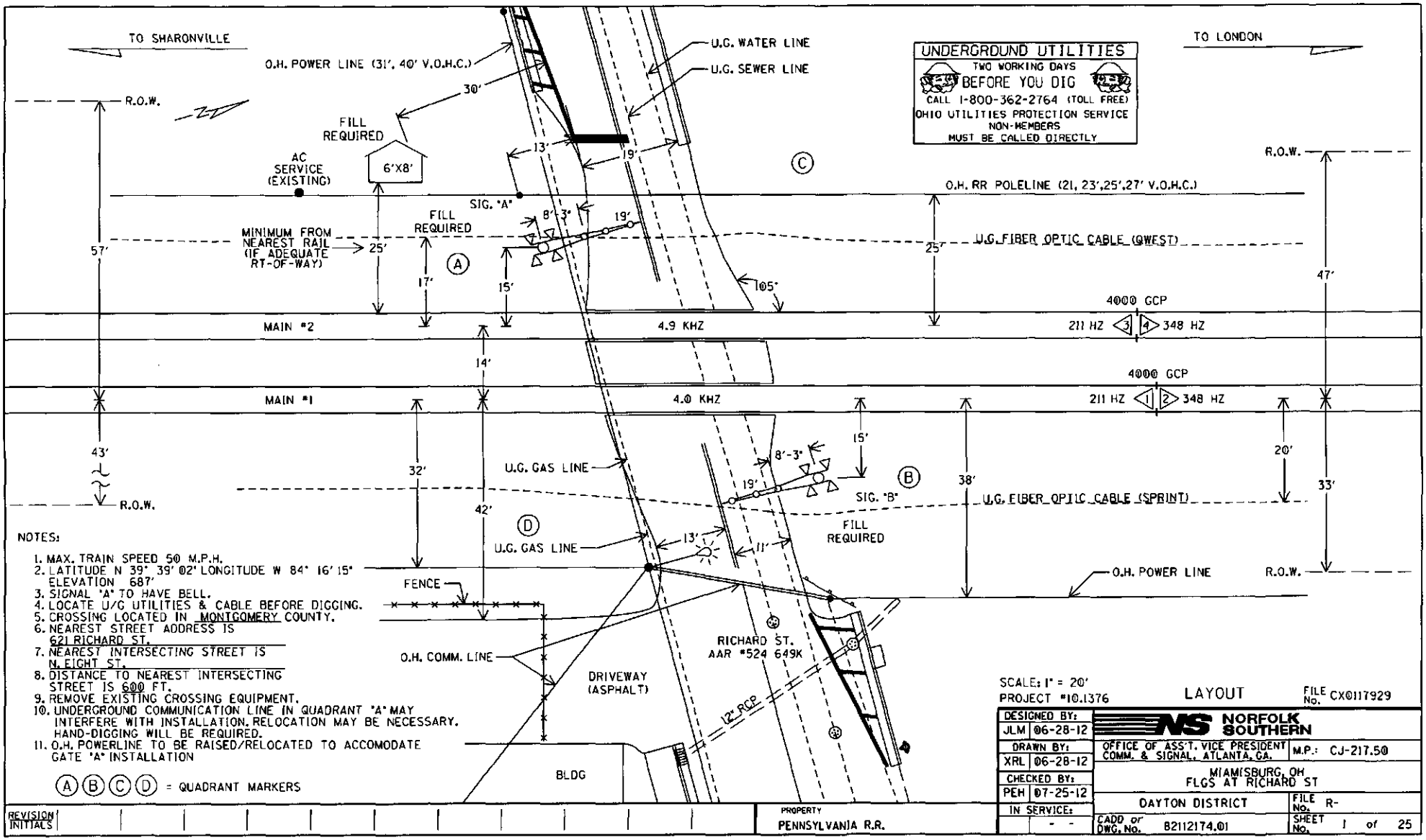

NOTES:

1. MAX. TRAIN SPEED 50 M.P.H.
2. LATITUDE N 39° 39' 02" LONGITUDE W 84° 16' 15" ELEVATION 687'
3. SIGNAL "A" TO HAVE BELL.
4. LOCATE U/G UTILITIES & CABLE BEFORE DIGGING.
5. CROSSING LOCATED IN MONTGOMERY COUNTY.
6. NEAREST STREET ADDRESS IS 621 RICHARD ST.
7. NEAREST INTERSECTING STREET IS N. EIGHT ST.
8. DISTANCE TO NEAREST INTERSECTING STREET IS 600 FT.
9. REMOVE EXISTING CROSSING EQUIPMENT.
10. UNDERGROUND COMMUNICATION LINE IN QUADRANT "A" MAY INTERFERE WITH INSTALLATION. RELOCATION MAY BE NECESSARY. HAND-DIGGING WILL BE REQUIRED.
11. O.H. POWERLINE TO BE RAISED/RELOCATED TO ACCOMODATE GATE "A" INSTALLATION

(A) (B) (C) (D) = QUADRANT MARKERS

SCALE: 1" = 20'
PROJECT #10.1376

LAYOUT

FILE No. CX0117929

DESIGNED BY: JLM 06-28-12	NORFOLK SOUTHERN
DRAWN BY: XRL 06-28-12	OFFICE OF ASS'T. VICE PRESIDENT COMM. & SIGNAL, ATLANTA, GA. — M.P.: CJ-217.50
CHECKED BY: PEH 07-25-12	MIAMISBURG, OH FLGS AT RICHARD ST
IN SERVICE: - -	DAYTON DISTRICT — FILE No. R-
	CADD or DWG. No. 82112174.01 — SHEET No. 1 of 25

REVISION INITIALS

PROPERTY
PENNSYLVANIA R.R.

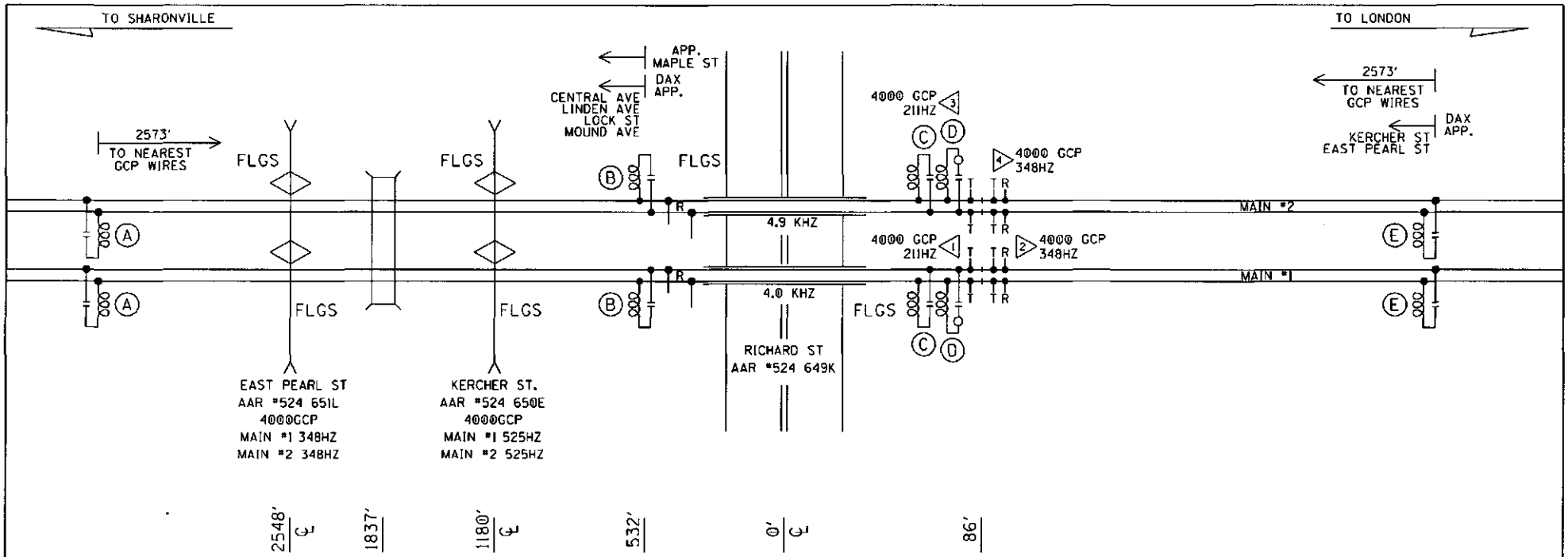

(A)- MF-NBS 62775-1543 (211HZ)

(B)- MF-NBS 62775-8621 (86HZ)

(C)- MF-NBS 62775-1543 (348HZ)

(D)- MF-NBS 62775-3497 (525HZ) W/8V617-1000

(E)- MF-NBS 62775-1543 (348HZ)

PROJECT #10.1376 PROFILE FILE No. CX0117929

DESIGNED BY: JLM 06-28-12	NORFOLK SOUTHERN
DRAWN BY: XRL 06-28-12	OFFICE OF ASS'T. VICE PRESIDENT COMM. & SIGNAL, ATLANTA, GA. — M.P.: CJ-217.50
CHECKED BY: PEH 07-25-12	MIAMISBURG, OH FLGS AT RICHARD ST
IN SERVICE: - -	DAYTON DISTRICT — FILE No. R-
	CADD or DWG. No. 82112174.02 — SHEET No. 2 of 25

REVISION INITIALS

PROPERTY PENNSYLVANIA R.R.

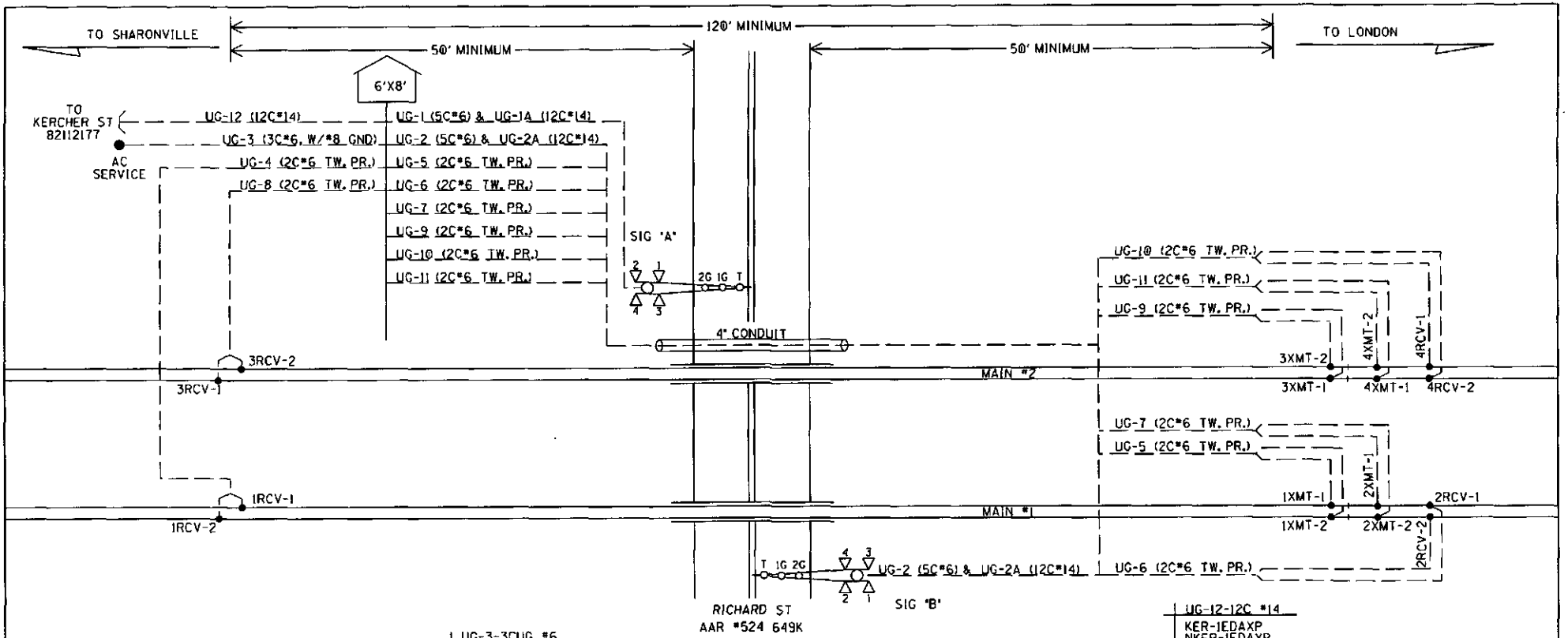

UG-1-5CUG *6
AEC
AEZ
AEB
BI6-A
NI6-A

UG-2-5CUG *6
BEC
BEZ
BEB
BI6-B
NI6-B

UG-1A-12CUG *14
AXG
NAXG
AXX
IAXX
XGPI
AMTSS
AGD
AGBXI20
AGNXI20
SPARE
SPARE

UG-2A-12CUG *14
BXG
NBXG
BXX
IBXX
XGPI
XGP
BMTSS
BGD
BGBXI20
BGNXI20
SPARE
SPARE

UG-3-3CUG *6 W/*8 GND
BXI20-A
BXI20-B
NXI20
GND

UG-4-TW. PR. *6
IRCV-1
IRCV-2

UG-5-TW. PR. *6
IXMT-1
IXMT-2

UG-6-TW. PR. *6
2RCV-1
2RCV-2

UG-7-TW. PR. *6
2XMT-1
2XMT-2

UG-8-TW. PR. *6
3RCV-1
3RCV-2

UG-9-TW. PR. *6
3XMT-1
3XMT-2

UG-10-TW. PR. *6
4RCV-1
4RCV-2

UG-11-TW. PR. *6
4XMT-1
4XMT-2

UG-12-12C *14
KER-1EDAXP
NKER-1EDAXP
KER-2EDAXP
NKER-2EDAXP
EPE-1EDAXP
NEPE-1EDAXP
EPE-2EDAXP
NEPE-2EDAXP
SPARE
SPARE
SPARE
SPARE

CABLE PLAN

DESIGNED BY: JLM 06-28-12	NORFOLK SOUTHERN
DRAWN BY: XRL 06-28-12	OFFICE OF ASS'T. VICE PRESIDENT COMM. & SIGNAL, ATLANTA, GA. — M.P.: CJ-217.50
CHECKED BY: PEH 07-25-12	MIAMISBURG, OH FLCS AT RICHARD ST
IN SERVICE: - -	DAYTON DISTRICT — FILE No. R-
	CADD or DWG. No. 82112174.03 — SHEET No. 3 of 25

REVISION INITIALS

PROPERTY
PENNSYLVANIA R.R.

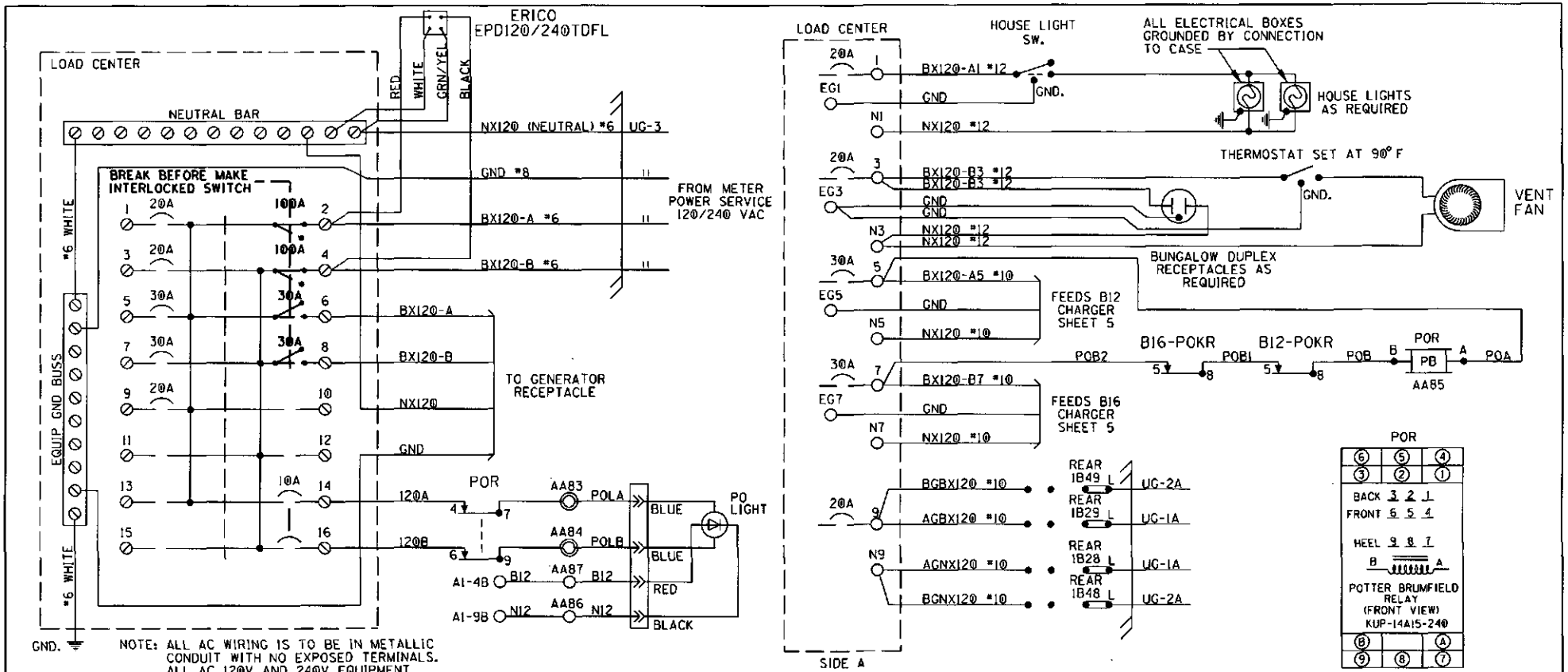

SQUARE 'D' PART NUMBERS:

LOAD CENTER——QO116L125G
10A 1P CIR BKR——QO110
10A 2P CIR BKR——QO210
20A 1P CIR BKR——QO120
30A 1P CIR BKR——QO130
30A 2P CIR BKR——QO230
60A 2P CIR BKR——QO260
100A 2P CIR BKR——QO2100
MECH INTERLOCK——PK4DTIM4LA

GENERATOR RECEPTACLE:
MALE CONNECTOR - NEMA L1430-FI

LOAD CENTER WIRING

DESIGNED BY: JLM 06-28-12	NORFOLK SOUTHERN		
DRAWN BY: XRL 06-28-12	OFFICE OF ASS'T. VICE PRESIDENT COMM. & SIGNAL, ATLANTA, GA.	M.P.: CJ-217.50	
CHECKED BY: PEH 07-25-12	MIAMISBURG, OH FLGS AT RICHARD ST		
IN SERVICE: - -	DAYTON DISTRICT	FILE No. R-	
	CADD or DWG. No. 82112174.04	SHEET No. 4 of 25	

REVISION INITIALS

PROPERTY
PENNSYLVANIA R.R.

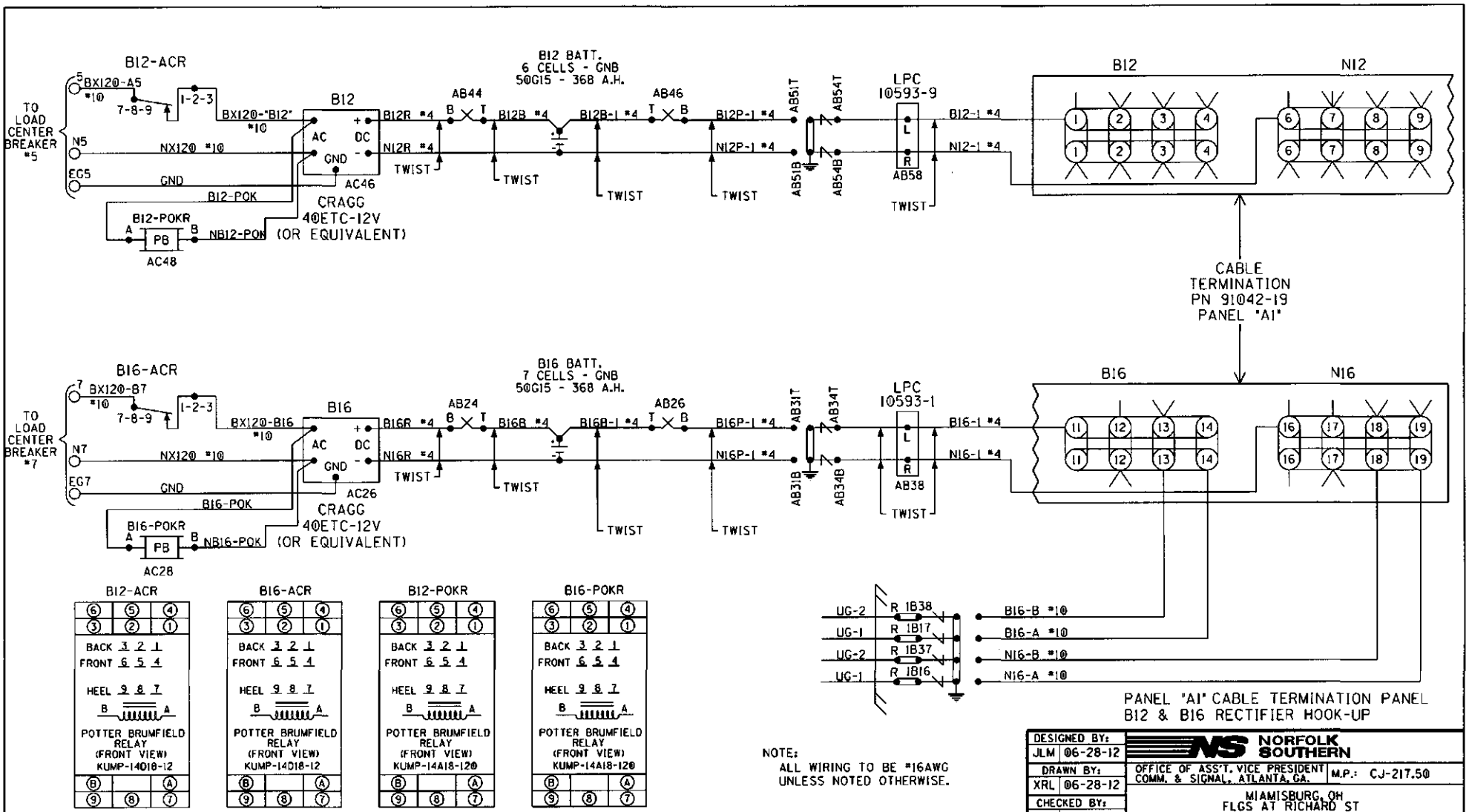

PANEL "A1" CABLE TERMINATION PANEL
B12 & B16 RECTIFIER HOOK-UP

NOTE:
ALL WIRING TO BE #16AWG
UNLESS NOTED OTHERWISE.

DESIGNED BY: JLM 06-28-12	NORFOLK SOUTHERN	
DRAWN BY: XRL 06-28-12	OFFICE OF ASS'T. VICE PRESIDENT COMM. & SIGNAL, ATLANTA, GA.	M.P.: CJ-217.50
CHECKED BY: PEH 07-25-12	MIAMISBURG, OH FLGS AT RICHARD ST	
IN SERVICE: - -	DAYTON DISTRICT	FILE No. R-
	CADD or DWG. No. 82112174.05	SHEET No. 5 of 25

REVISION INITIALS

PROPERTY
PENNSYLVANIA R.R.

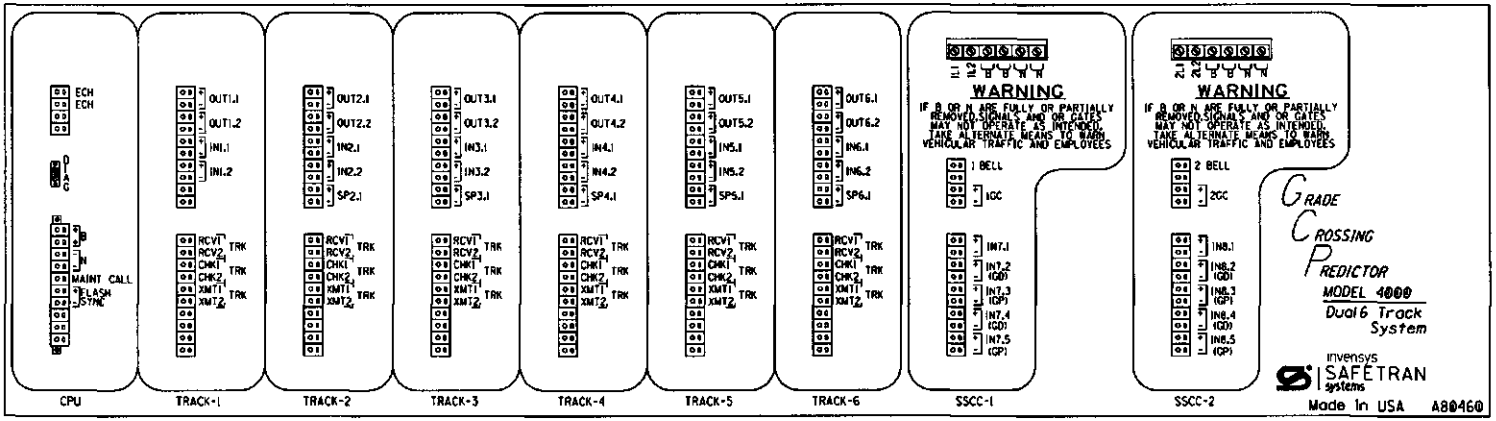

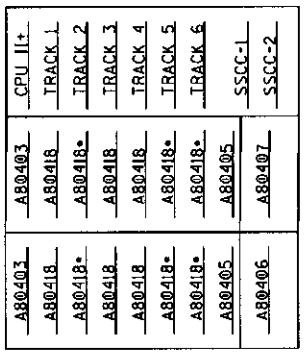

MODUAL BAYS SHOWN ON NEXT SHEET

WARNING

REMOVAL OF THE SSCCIIII MODULE WILL CAUSE THE GATE(S) TO DROP BUT THE LIGHTS WILL NOT ACTIVATE

CAUTION

ASSURE CORRECT POLARITY OF THE SSCCIIII MODULE OR SEVERE DAMAGE WILL OCCUR.

ATTENTION!

ENSURE THE DISPLAY MODULE HEATER IS DISABLED. LEAVING THE DISPLAY HEATER ENABLED WILL REDUCE THE AMOUNT OF BATTERY STANDBY TIME IN THE EVENT OF AN AC POWER FAILURE.

HEATER FUNCTION IS JUMPER SELECTABLE ON THE DISPLAY MODULE BOARD.
THREE OPTIONS ARE AVAILABLE:
NORMAL LCD HTR (DEFAULT)
HI CURRENT
NO JUMPER (HEATER DISABLED)

*: MAIN AND STANDBY MAY USE RIO IN TRACKS 2, 5, AND 6 SLOTS (M3, M6, AND M7)

PANEL "A2" 4000 GCP REDUNDANT
6-TK CHASSIS AND I/O LAYOUT

DESIGNED BY: JLM 06-28-12	NORFOLK SOUTHERN
DRAWN BY: XRL 06-28-12	OFFICE OF ASS'T. VICE PRESIDENT COMM. & SIGNAL, ATLANTA, GA. — M.P.: CJ-21T.50
CHECKED BY: PEH 07-25-12	MIAMISBURG, OH FLGS AT RICHARD ST
IN SERVICE: - -	DAYTON DISTRICT — FILE No. R-
	CADD or DWG. No. 82112174.06 — SHEET No. 6 of 25

REVISION INITIALS

PROPERTY
PENNSYLVANIA R.R.

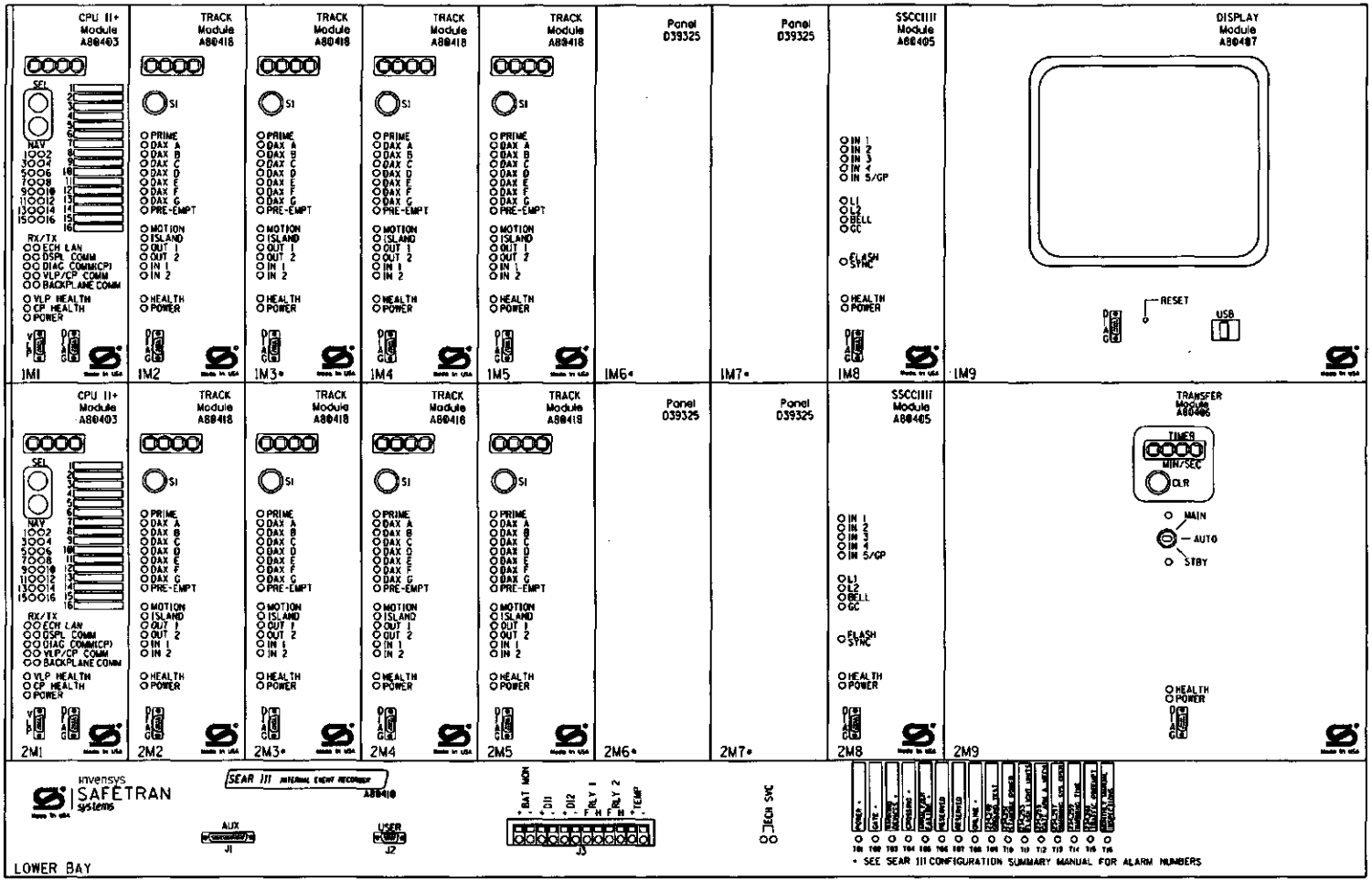

WARNING

REMOVAL OF THE SSCCIIII MODULE WILL CAUSE THE GATE(S) TO DROP BUT THE LIGHTS WILL NOT ACTIVATE

CAUTION

ASSURE CORRECT POLARITY OF THE SSCCIIII MODULE OR SEVERE DAMAGE WILL OCCUR.

ATTENTION!

ENSURE THE DISPLAY MODULE HEATER IS DISABLED. LEAVING THE DISPLAY HEATER ENABLED WILL REDUCE THE AMOUNT OF BATTERY STANDBY TIME IN THE EVENT OF AN AC POWER FAILURE.

HEATER FUNCTION IS JUMPER SELECTABLE ON THE DISPLAY MODULE BOARD.
THREE OPTIONS ARE AVAILABLE:
NORMAL LCD HTR (DEFAULT)
HI CURRENT
NO JUMPER (HEATER DISABLED)

*= MAIN AND STANDBY MAY USE RIO IN TRACKS 2, 5, AND 6 SLOTS (M3, M6, AND M7)

PANEL "A2" 4000 GCP REDUNDANT
6-TK CHASSIS AND MODULE LAYOUT

DESIGNED BY: JLM 06-28-12	NORFOLK SOUTHERN		
DRAWN BY: XRL 06-28-12	OFFICE OF ASS'T. VICE PRESIDENT COMM. & SIGNAL, ATLANTA, GA.	M.P.: CJ-217.50	
CHECKED BY: PEH 07-25-12	MIAMISBURG, OH FLGS AT RICHARD ST		
IN SERVICE: - -	DAYTON DISTRICT	FILE No. R-	
	CADD or DWG. No. 82112174.07	SHEET No. 7 of 25	

REVISION INITIALS										

PROPERTY
PENNSYLVANIA R.R.

Program Report

Location and SIN

DOT Number: 524649K
Milepost Number: CJ-217.50
Site Name: RICHARD ST

SIN: 755023403916

MCF and Template Selection

MCF Name: GCP-T6X-02-1.mcf
MCF Revision: 021
MCFCRC: 6076E435

Template = 1D:3 Uni pairs

Check Numbers

Office Check No. (DT 4.6.0): 667819E0
Office Check Number: 667819E0
Config. Check Number: 09DA7950
(Based on MCF Revision 021)

Program

BASIC: module configuration
Track 1 Slot = Track
Track 2/RIO 1 Slot = Track
Track 3 Slot = Track
Track 4 Slot = Track
Track 5/RIO 2 Slot = Not Used
Track 6/RIO 3 Slot = Not Used
SSCC-1 Slot = SSCC31
SSCC-2 Slot = SSCC31
SEAR Used = Yes

BASIC: MS/GCP operation
Track 1 : MS/GCP Operation = Yes
Track 2 : MS/GCP Operation = Yes
Track 3 : MS/GCP Operation = Yes
Track 4 : MS/GCP Operation = Yes

BASIC: Island operation
Track 1 : Island Used = Internal
Track 2 : Island Used = No
Track 3 : Island Used = Internal
Track 4 : Island Used = No

BASIC: preemption
Preempt Logic = No

BASIC: radio Dax links
Radio DAX link A Used = No
Radio DAX link B Used = No

BASIC: Vital Comms links
Vital Comms link 1 Used = No
Vital Comms link 2 Used = No

PREDICTORS: track 1
Track 1 : Prime Used = Yes
Track 1 : Dax A Used = No
Track 1 : Dax B Used = No
Track 1 : Dax C Used = No
Track 1 : Dax D Used = No
Track 1 : Dax E Used = No
Track 1 : Dax F Used = No
Track 1 : Dax G Used = No

PREDICTORS: track 2
Track 2 : Prime Used = Yes
Track 2 : Dax A Used = Yes
Track 2 : Dax B Used = Yes
Track 2 : Dax C Used = No
Track 2 : Dax D Used = No
Track 2 : Dax E Used = No
Track 2 : Dax F Used = No
Track 2 : Dax G Used = No

PREDICTORS: track 3
Track 3 : Prime Used = Yes
Track 3 : Dax A Used = No
Track 3 : Dax B Used = No
Track 3 : Dax C Used = No
Track 3 : Dax D Used = No
Track 3 : Dax E Used = No
Track 3 : Dax F Used = No
Track 3 : Dax G Used = No

PREDICTORS: track 4
Track 4 : Prime Used = Yes
Track 4 : Dax A Used = Yes
Track 4 : Dax B Used = Yes
Track 4 : Dax C Used = No
Track 4 : Dax D Used = No
Track 4 : Dax E Used = No
Track 4 : Dax F Used = No
Track 4 : Dax G Used = No

GCP: track 1
Track 1 : GCP Freq Category = Standard
Track 1 : GCP Frequency = 211 Hz
Track 1 : Approach Distance = 2573 ft
Track 1 : Uni/Bi/Sim-Bidirni = Sim. Bidirni
Track 1 : GCP Transmit Level = High
Track 1 : Island Connection = Isl1
Track 1 : Island Distance = 134 ft
Track 1 : Computed Distance = 9999 ft
Track 1 : Linearization Steps = 100

GCP: track 1 enhanced det
Track 1 : Inbound PS Sensitivity = Off
Track 1 : Speed Limiting Used = Yes
Track 1 : Outbound False Act Lvl = Normal
Track 1 : Outbound PS Timer = 20 sec
Track 1 : Trailing Switch Logic = On
Track 1 : Post Joint Detn Time = 15 sec
Track 1 : Adv Appr Predn = No
Track 1 : Cancel Pickup Delay = This Isl

GCP: track 1 prime
Track 1 : Prime Warning Time = 30 sec
Track 1 : Prime Offset Distance = 0 ft
Track 1 : Switch MS EZ Level = 10
Track 1 : Prime MS/GCP Mode = Pred
Track 1 : Prime Pickup Delay = 15 sec
Track 1 : Prime UAX = Not Used

GCP: track 1 pos start
Track 1 : Positive Start = Off
Track 1 : Sudden Shnt Det Used = No
Track 1 : Low EZ Detection Used = No

GCP: track 1 MS Control
Track 1 : MS/GCP Ctrl IP Used = No
Track 1 : MS Sensitivity Level = 0
Track 1 : Compensation Level = 1300
Track 1 : Warn Time-Ballast Comp = High
Track 1 : Low EX Adjustment = 39
Track 1 : Bidirn Dax Passthru = No
Track 1 : False Act on Train Stop = No
Track 1 : EX Limiting Used = Yes
Track 1 : EZ Correction Used = Yes

GCP: track 2
Track 2 : GCP Freq Category = Standard
Track 2 : GCP Frequency = 348 Hz
Track 2 : Approach Distance = 2573 ft
Track 2 : Uni/Bi/Sim-Bidirni = Sim. Bidirni
Track 2 : GCP Transmit Level = Medium
Track 2 : Island Connection = Isl1
Track 2 : Island Distance = 0 ft
Track 2 : Computed Distance = 9999 ft
Track 2 : Linearization Steps = 100

GCP: track 2 enhanced det
Track 2 : Inbound PS Sensitivity = Off
Track 2 : Speed Limiting Used = Yes
Track 2 : Outbound False Act Lvl = Normal
Track 2 : Outbound PS Timer = 20 sec
Track 2 : Trailing Switch Logic = On
Track 2 : Post Joint Detn Time = 15 sec
Track 2 : Adv Appr Predn = No
Track 2 : Cancel Pickup Delay = This Isl

GCP: track 2 prime
Track 2 : Prime Warning Time = 30 sec
Track 2 : Prime Offset Distance = 0 ft
Track 2 : Switch MS EZ Level = 10
Track 2 : Prime MS/GCP Mode = Pred
Track 2 : Prime Pickup Delay = 15 sec
Track 2 : Prime UAX = Not Used

GCP: track 2 Dax A
Track 2 : Dax A Warning Time = 30 sec
Track 2 : Dax A Offset Distance = 1190 ft
Track 2 : Switch MS EZ Level = 0
Track 2 : Pickup Delay Mode = Auto
Track 2 : Dax A MS/GCP Mode = Pred
Track 2 : Dax A Pickup Delay = 15 sec
Track 2 : Dax A Enable = Not Used

GCP: track 2 Dax B
Track 2 : Dax B Warning Time = 30 sec
Track 2 : Dax B Offset Distance = 2573 ft
Track 2 : Switch MS EZ Level = 0
Track 2 : Pickup Delay Mode = Auto
Track 2 : Dax B MS/GCP Mode = Pred
Track 2 : Dax B Pickup Delay = 15 sec
Track 2 : Dax B Enable = Not Used

GCP: track 2 pos start
Track 2 : Positive Start = Off
Track 2 : Sudden Shnt Det Used = No
Track 2 : Low EZ Detection Used = No

GCP: track 2 MS Control
Track 2 : MS/GCP Ctrl IP Used = No
Track 2 : MS Sensitivity Level = 0
Track 2 : Compensation Level = 1300
Track 2 : Warn Time-Ballast Comp = Low
Track 2 : Low EX Adjustment = 39
Track 2 : Bidirn Dax Passthru = No
Track 2 : False Act on Train Stop = No
Track 2 : EX Limiting Used = Yes
Track 2 : EZ Correction Used = Yes

GCP: track 3
Track 3 : GCP Freq Category = Standard
Track 3 : GCP Frequency = 211 Hz
Track 3 : Approach Distance = 2573 ft
Track 3 : Uni/Bi/Sim-Bidirni = Sim. Bidirni
Track 3 : GCP Transmit Level = High
Track 3 : Island Connection = Isl3
Track 3 : Island Distance = 134 ft
Track 3 : Computed Distance = 9999 ft
Track 3 : Linearization Steps = 100

GCP: track 3 enhanced det
Track 3 : Inbound PS Sensitivity = Off
Track 3 : Speed Limiting Used = Yes
Track 3 : Outbound False Act Lvl = Normal
Track 3 : Outbound PS Timer = 20 sec
Track 3 : Trailing Switch Logic = On
Track 3 : Post Joint Detn Time = 15 sec
Track 3 : Adv Appr Predn = No
Track 3 : Cancel Pickup Delay = This Isl

GCP: track 3 prime
Track 3 : Prime Warning Time = 30 sec
Track 3 : Prime Offset Distance = 0 ft
Track 3 : Switch MS EZ Level = 10
Track 3 : Prime MS/GCP Mode = Pred
Track 3 : Prime Pickup Delay = 15 sec
Track 3 : Prime UAX = Not Used

GCP: track 3 pos start
Track 3 : Positive Start = Off
Track 3 : Sudden Shnt Det Used = No
Track 3 : Low EZ Detection Used = No

GCP: track 3 MS Control
Track 3 : MS/GCP Ctrl IP Used = No
Track 3 : MS Sensitivity Level = 0
Track 3 : Compensation Level = 1300
Track 3 : Warn Time-Ballast Comp = High
Track 3 : Low EX Adjustment = 39
Track 3 : Bidirn Dax Passthru = No
Track 3 : False Act on Train Stop = No
Track 3 : EX Limiting Used = Yes
Track 3 : EZ Correction Used = Yes

4000 GCP PROGRAMMING SETUP

DESIGNED BY: JLM 06-28-12	NORFOLK SOUTHERN		
DRAWN BY: XRL 06-28-12	OFFICE OF ASS'T. VICE PRESIDENT COMM. & SIGNAL, ATLANTA, GA.	M.P.: CJ-217.50	
CHECKED BY: PEH 07-25-12	MIAMISBURG, OH FLGS AT RICHARD ST		
IN SERVICE: - -	DAYTON DISTRICT	FILE No. R-	
	CADD or DWG. No. 82112174.08	SHEET No. 8 of 25	

REVISION INITIALS										

PROPERTY
PENNSYLVANIA R.R.

GCP: track 4
Track 4 : GCP Freq Category = Standard
Track 4 : GCP Frequency = 348 Hz
Track 4 : Approach Distance = 2573 ft
Track 4 : Uni/Bi/Sim-Bidirni = Sim. Bidirni
Track 4 : GCP Transmit Level = Medium
Track 4 : Island Connection = Isl3
Track 4 : Island Distance = 0 ft
Track 4 : Computed Distance = 9999 ft
Track 4 : Linearization Steps = 100

GCP: track 4 enhanced det
Track 4 : Inbound PS Sensitivity = Off
Track 4 : Speed Limiting Used = Yes
Track 4 : Outbound False Act Lvl = Normal
Track 4 : Outbound PS Timer = 20 sec
Track 4 : Trailing Switch Logic = On
Track 4 : Post Joint Detn Time = 15 sec
Track 4 : Adv Appr Predn = No
Track 4 : Cancel Pickup Delay = This Isl

GCP: track 4 prime
Track 4 : Prime Warning Time = 30 sec
Track 4 : Prime Offset Distance = 0 ft
Track 4 : Switch MS EZ Level = 10
Track 4 : Prime MS/GCP Mode = Pred
Track 4 : Prime Pickup Delay = 15 sec
Track 4 : Prime UAX = Not Used

GCP: track 4 Dax A
Track 4 : Dax A Warning Time = 30 sec
Track 4 : Dax A Offset Distance = 1190 ft
Track 4 : Switch MS EZ Level = 0
Track 4 : Pickup Delay Mode = Auto
Track 4 : Dax A MS/GCP Mode = Pred
Track 4 : Dax A Pickup Delay = 15 sec
Track 4 : Dax A Enable = Not Used

GCP: track 4 Dax B
Track 4 : Dax B Warning Time = 30 sec
Track 4 : Dax B Offset Distance = 2552 ft
Track 4 : Switch MS EZ Level = 0
Track 4 : Pickup Delay Mode = Auto
Track 4 : Dax B MS/GCP Mode = Pred
Track 4 : Dax B Pickup Delay = 15 sec
Track 4 : Dax B Enable = Not Used

GCP: track 4 pos start
Track 4 : Positive Start = Off
Track 4 : Sudden Shnt Det Used = No
Track 4 : Low EZ Detection Used = No

GCP: track 4 MS Control
Track 4 : MS/GCP Ctrl IP Used = No
Track 4 : MS Sensitivity Level = 0
Track 4 : Compensation Level = 1300
Track 4 : Warn Time-Ballast Comp = Low
Track 4 : Low EX Adjustment = 39
Track 4 : Bidirn Dax Passthru = No
Track 4 : False Act on Train Stop = No
Track 4 : EX Limiting Used = Yes
Track 4 : EZ Correction Used = Yes

ISLAND: track 1
Track 1 : Isl Frequency = 4.0 kHz
Track 1 : Pickup Delay (2s +) = 0 sec
Track 1 : Isl Enable IP Used = No

ISLAND: track 3
Track 3 : Isl Frequency = 4.9 kHz
Track 3 : Pickup Delay (2s +) = 0 sec
Track 3 : Isl Enable IP Used = No

AND: track Anding
AND 1 XR Used = Yes
AND 2 Used = No
AND 3 Used = No
AND 4 Used = No
AND 5 Used = No
AND 6 Used = No
AND 7 Used = No
AND 8 Used = No

AND: AND 1 XR
AND 1 XR Track 1 = Prime
AND 1 XR Track 2 = Prime
AND 1 XR Track 3 = Prime
AND 1 XR Track 4 = Prime
AND 1 Enable Used = Yes
And 1 Enable Pickup = 5 sec
AND 1 Enable Drop = 0 sec
AND 1 Wrap Used = No

ADVANCED: MS restart
MS/GCP Restart Used = No

ADVANCED: out of service
OOS Control = Display+OOS IPs
OOS Timeout = Yes
OOS Timeout = 1 hrs

ADVANCED: out of service 2
TL OOS Control = OOS Input 1
T2 OOS Control = OOS Input 1
T3 OOS Control = OOS Input 1
T4 OOS Control = OOS Input 1

ADVANCED: track wrap circuits
Wrap LOS Timer = 5 sec
Track 1 Wrap Used = No
Track 2 Wrap Used = No
Track 3 Wrap Used = No
Track 4 Wrap Used = No

ADVANCED: trk 1 overrides
Track 1 : All Predictors Override Used = No

ADVANCED: trk 2 overrides
Track 2 : All Predictors Override Used = No
Track 2 : Dax A Override Used = No
Track 2 : Dax B Override Used = No

ADVANCED: trk 3 overrides
Track 3 : All Predictors Override Used = No

ADVANCED: trk 4 overrides
Track 4 : All Predictors Override Used = No
Track 4 : Dax A Override Used = No
Track 4 : Dax B Override Used = No

ADVANCED: OR logic
OR 1 Used = No
OR 2 Used = No
OR 3 Used = No
OR 4 Used = No

ADVANCED: internal I/O 1
Pass Thrus = No
Int.1 Sets = Not Used
Int.1 Set by = Not Used
Int.2 Sets = Not Used
Int.2 Set by = Not Used
Int.3 Sets = Not Used
Int.3 Set by = Not Used
Int.4 Sets = Not Used
Int.4 Set by = Not Used

ADVANCED: internal I/O 2
Int.5 Sets = Not Used
Int.5 Set by = Not Used
Int.6 Sets = Not Used
Int.6 Set by = Not Used
Int.7 Sets = Not Used
Int.7 Set by = Not Used
Int.8 Sets = Not Used
Int.8 Set by = Not Used

ADVANCED: internal I/O 3
Int.9 Sets = Not Used
Int.9 Set by = Not Used
Int.10 Sets = Not Used
Int.10 Set by = Not Used
Int.11 Sets = Not Used
Int.11 Set by = Not Used
Int.12 Sets = Not Used
Int.12 Set by = Not Used

ADVANCED: internal I/O 4
Int.13 Sets = Not Used
Int.13 Set by = Not Used
Int.14 Sets = Not Used
Int.14 Set by = Not Used
Int.15 Sets = Not Used
Int.15 Set by = Not Used
Int.16 Sets = Not Used
Int.16 Set by = Not Used

ADVANCED: site options
Daylight Savings = On
Units = Standard
Maint Call Rpt IP Used = No
Emergency Activate IP = No
EZ/EX Logging = Change
EZ/EX Point Change = 3

SSCC
Gates Used = Yes
SSCC1+2 GPs Coupled = Yes
Min Activation = 0 sec
Rmt Activation Cancel = 2 min
Bell On Gate Rising = No
Mute Bell On Gate Down = No
SSCCIV Controller Used = No

SSCC: 1
SSCC-1 Activation = AND 1 XR
SSCC-1 Gate Delay = 4 sec
SSCC-1 Number of GPs = 1
SSCC-1 Number of GDs = 2
SSCC 1 : Flash Rate = 40
SSCC 1 : Low Battery Detection = No
SSCC 1 : Flash Sync = master
SSCC 1 : Invert Gate Output = No
SSCC 1 : Lamp Neutral Test = On
Aux-1 Xng Ctrl Used = No

SSCC: 2
SSCC-2 Activation = AND 1 XR
SSCC-2 Gate Delay = 4 sec
SSCC-2 Number of GPs = 0
SSCC-2 Number of GDs = 0
SSCC 2 : Flash Rate = 40
SSCC 2 : Low Battery Detection = No
SSCC 2 : Flash Sync = slave
SSCC 2 : Invert Gate Output = No
SSCC 2 : Lamp Neutral Test = On
Aux-2 Xng Ctrl Used = No

OUTPUT: assignment page 1
OUT 1.1 = Not Used
OUT 1.2 = Not Used
OUT 2.1 = T2 Dax A
OUT 2.2 = T2 Dax B
OUT 3.1 = Not Used
OUT 3.2 = Not Used
OUT 4.1 = T4 Dax A
OUT 4.2 = T4 Dax B

INPUT: assignment page 1
IN 1.1 = Not Used
IN 1.2 = Not Used
IN 2.1 = Not Used
IN 2.2 = Not Used
IN 3.1 = Not Used
IN 3.2 = Not Used
IN 4.1 = Not Used
IN 4.2 = Not Used

IO: assignment SSCC
OUT GC 1 = Gate Output 1
OUT GC 2 = Gate Output 2
IN 7.1 = Not Used
IN 7.2 = GD 1.2
IN 7.3 = AND 1 XR Enable
IN 7.4 = GD 1.1
IN 7.5 = GP 1.1
IN 8.1 = Not Used
IN 8.2 = Out Of Service IP 1
IN 8.3 = Not Used
IN 8.4 = Not Used
IN 8.5 = Not Used

SEAR
SEAR Subnode = 3
DI 1 = Gnd Flt Tester 1
DI 2 = Not Used
Rly 1 = Ground Fault Test
Rly 2 = AC Control

SEAR: inputs
SP 2.1 = POK 1
SP 3.1 = Not Used
SP 4.1 = Not Used
SP 5.1 = Not Used
SP 6.1 = Not Used

SEAR: slot 1-4 inputs
IN 1.1 = Not Used
IN 1.2 = Not Used
IN 2.1 = Not Used
IN 2.2 = Not Used
IN 3.1 = Not Used
IN 3.2 = Not Used
IN 4.1 = Not Used
IN 4.2 = Not Used

SEAR: inputs slot 5
IN 5.1 = Not Used
IN 5.2 = Not Used

SEAR: inputs slot 6
IN 6.1 = Not Used
IN 6.2 = Not Used

SEAR: slot 7-8 inputs
IN 7.1 = TSS 1
IN 8.1 = TSS 2
IN 8.3 = POK 2
IN 8.4 = Not Used
IN 8.5 = Not Used

SITE: programming
Radio Subnode = 1
Field Password = Off
Low Battery Enabled = Off

Configuration Package File

Filename: 82112174.poc

4000 GCP PROGRAMMING SETUP

DESIGNED BY: JLM 06-28-12	NORFOLK SOUTHERN		
DRAWN BY: XRL 06-28-12	OFFICE OF ASS'T. VICE PRESIDENT COMM. & SIGNAL, ATLANTA, GA.	M.P.: CJ-217.50	
CHECKED BY: PEH 07-25-12	MIAMISBURG, OH FLGS AT RICHARD ST		
IN SERVICE: - -	DAYTON DISTRICT	FILE No. R-	
	CADD or DWG. No. 82112174.09	SHEET No. 9 of 25	

REVISION INITIALS											

PROPERTY
PENNSYLVANIA R.R.

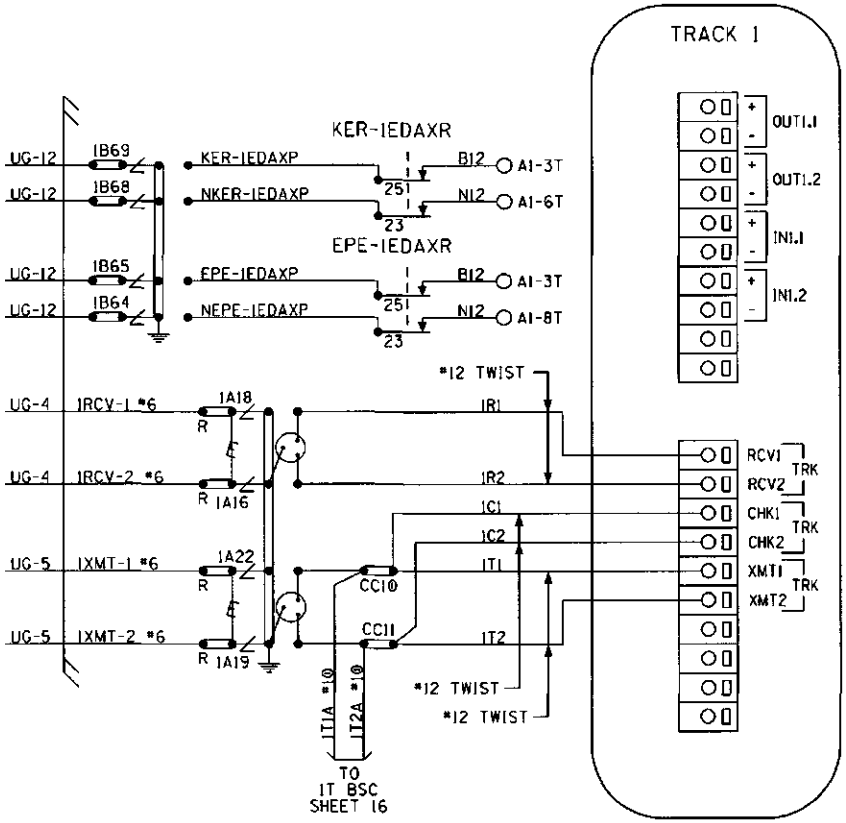

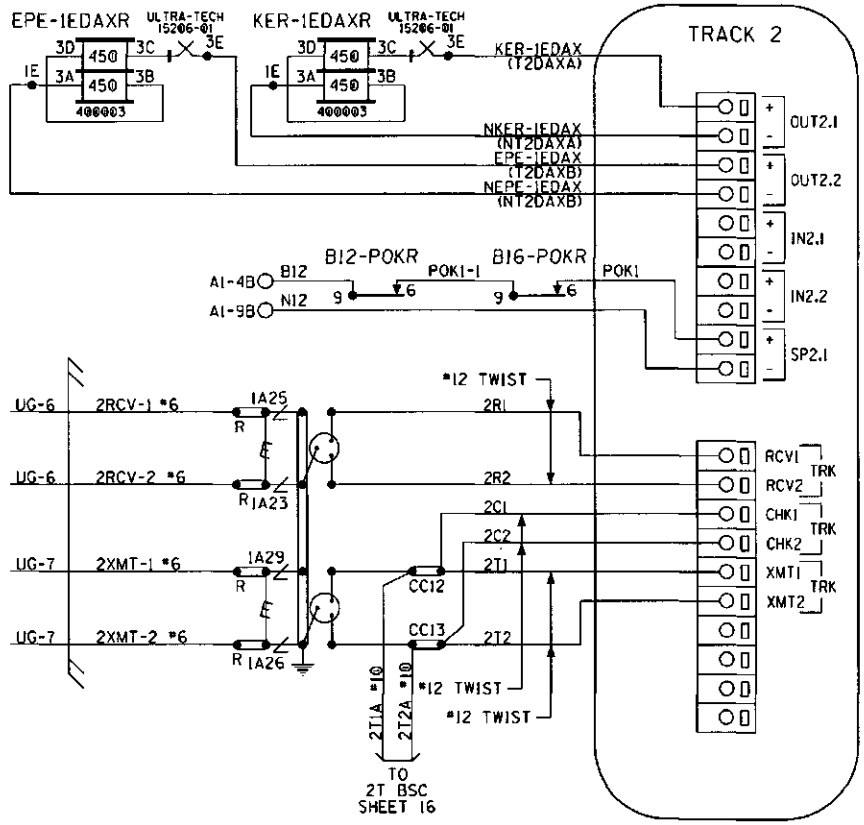

PANEL "A2" CONNECTORS FOR MODULES (A80418)

NOTE:
ALL WIRING TO BE #16AWG
UNLESS NOTED OTHERWISE.

DESIGNED BY: JLM 06-28-12	NORFOLK SOUTHERN		
DRAWN BY: XRL 06-28-12	OFFICE OF ASS'T. VICE PRESIDENT COMM. & SIGNAL, ATLANTA, GA.	M.P.: CJ-217.50	
CHECKED BY: PEH 07-25-12	MIAMISBURG, OH FLGS AT RICHARD ST		
IN SERVICE: - -	DAYTON DISTRICT	FILE No. R-	
	CADD or DWG. No. 82112174.10	SHEET No. 10 of 25	

REVISION INITIALS

PROPERTY
PENNSYLVANIA R.R.

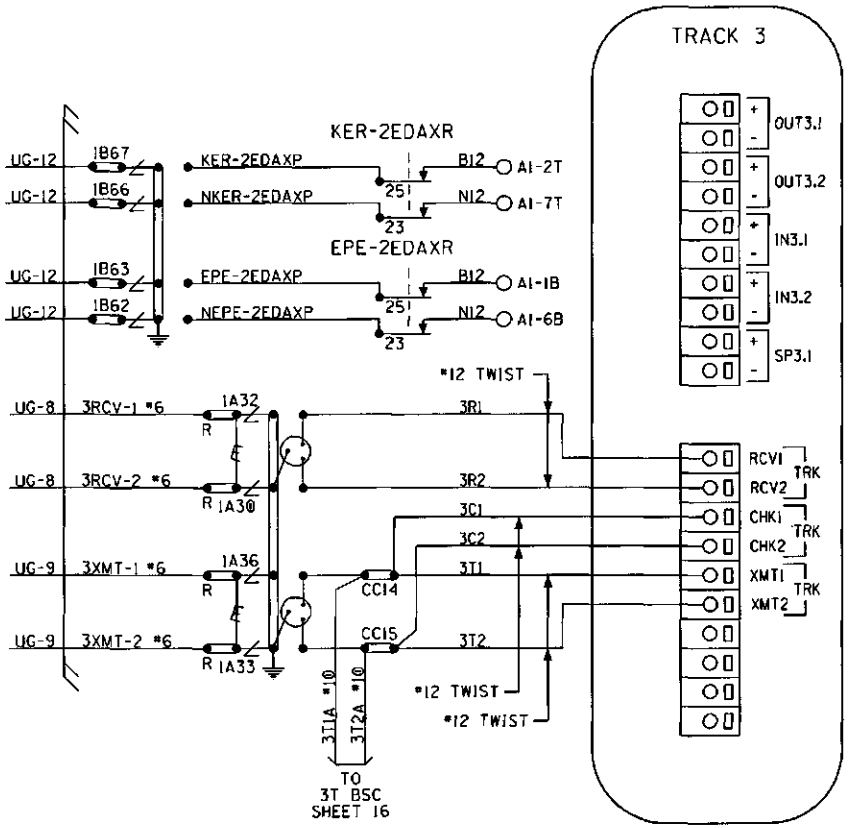

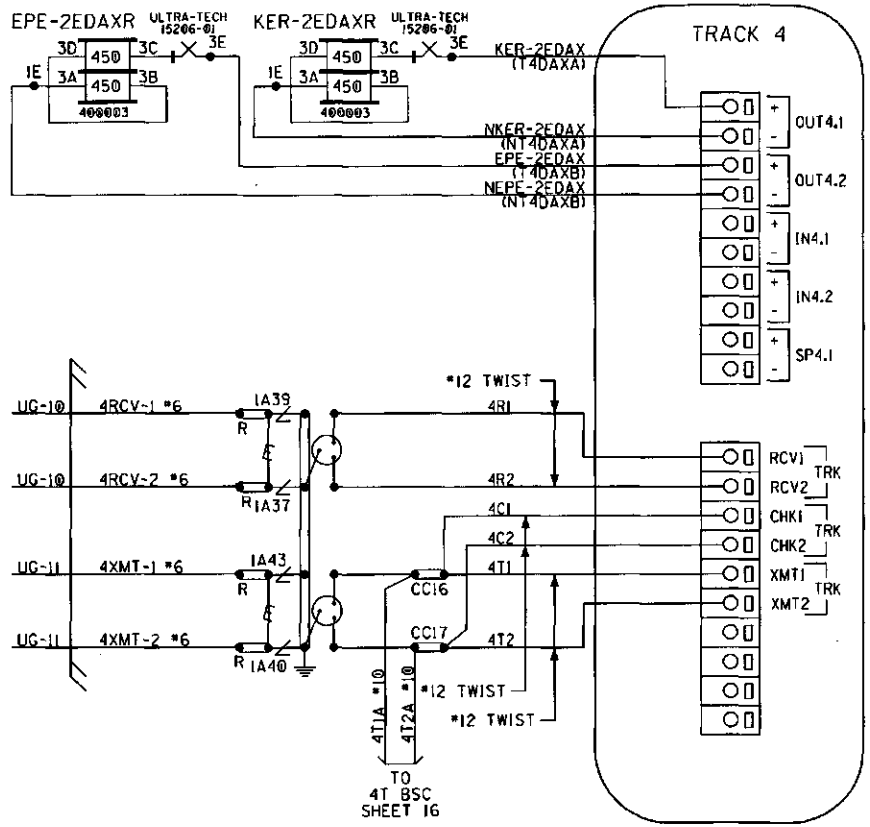

PANEL "A2" CONNECTORS FOR MODULES (A80418)

NOTE:
ALL WIRING TO BE #16AWG
UNLESS NOTED OTHERWISE.

DESIGNED BY: JLM 06-28-12	NORFOLK SOUTHERN
DRAWN BY: XRL 06-28-12	OFFICE OF ASS'T. VICE PRESIDENT COMM. & SIGNAL, ATLANTA, GA. — M.P.: CJ-217.50
CHECKED BY: PEH 07-25-12	MIAMISBURG, OH FLGS AT RICHARD ST
IN SERVICE: - -	DAYTON DISTRICT — FILE No. R-
	CADD or DWG. No. 82112174.11 — SHEET No. 11 of 25

REVISION INITIALS

PROPERTY
PENNSYLVANIA R.R.

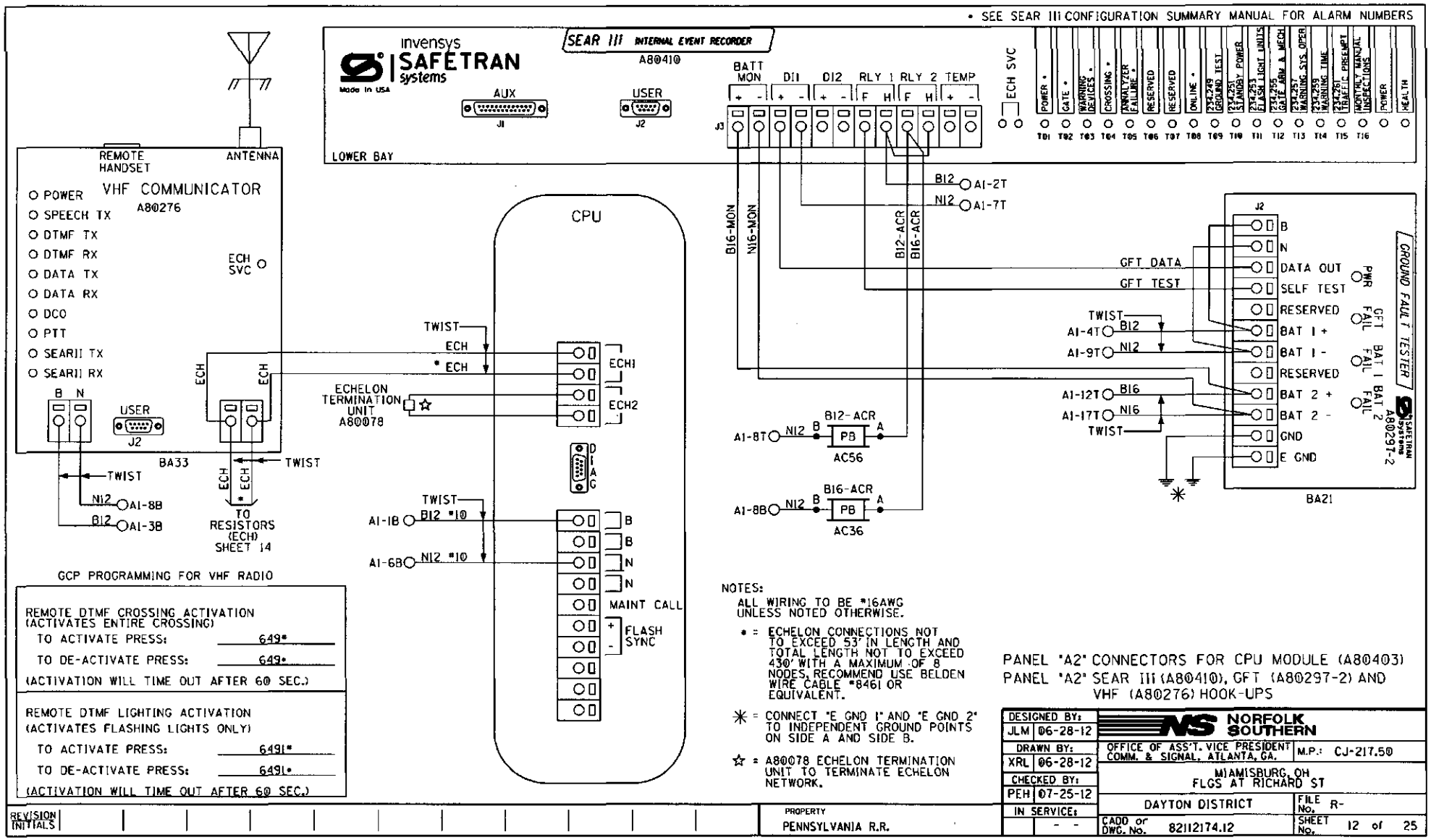
• SEE SEAR III CONFIGURATION SUMMARY MANUAL FOR ALARM NUMBERS
invensys SAFETRAN systems
Made in USA
SEAR III INTERNAL EVENT RECORDER
A80410
AUX
J1
USER
J2
BATT MON
DI1
DI2
RLY 1
RLY 2
TEMP
J3
ECH SVC
POWER •
GATE •
WARNING DEVICES •
CROSSING •
ANNUNCIATOR FAILURE •
RESERVED
RESERVED
ONLINE •
234.249 GROUND TEST
234.251 STANDBY POWER
234.253 234.261 LIGHT UNITS
234.255 GATE ARM A MECH
234.257 WARNING SYS. OPER
234.259 WARNING TIME
234.261 TRAFFIC PRESENCE
MONTHLY MANUAL INSPECTIONS
POWER
HEATER
TD1 TD2 TD3 TD4 TD5 TD6 TD7 TD8 TD9 TD10 TD11 TD12 TD13 TD14 TD15 TD16
LOWER BAY
REMOTE HANDSET
ANTENNA
VHF COMMUNICATOR
A80276
POWER
SPEECH TX
DTMF TX
DTMF RX
DATA TX
DATA RX
DCO
PTT
SEARII TX
SEARII RX
ECH SVC
B N
USER
J2
BA33
TWIST
N12 A1-8B
B12 A1-3B
ECH
ECH
TO RESISTORS (ECH) SHEET 14
CPU
TWIST
ECH
* ECH
ECH1
ECH2
ECHELON TERMINATION UNIT A80078
DIAG
TWIST
A1-1B B12 *10
A1-6B N12 *10
B
B
N
N
MAINT CALL
FLASH SYNC
B16-MON
N16-MON
B12-ACR
B16-ACR
B12 A1-2T
N12 A1-7T
GFT DATA
GFT TEST
TWIST
A1-4T B12
A1-9T N12
A1-12T B16
A1-17T N16
TWIST
A1-8T N12 B PB A
B12-ACR
AC56
A1-8B N12 B PB A
B16-ACR
AC36
J2
B
N
DATA OUT
SELF TEST
RESERVED
BAT 1 +
BAT 1 -
RESERVED
BAT 2 +
BAT 2 -
GND
E GND
PWR
GFT FAIL
BAT 1 FAIL
BAT 2 FAIL
GROUND FAULT TESTER
SAFETRAN Systems
A80297-2
BA21
GCP PROGRAMMING FOR VHF RADIO
REMOTE DTMF CROSSING ACTIVATION
(ACTIVATES ENTIRE CROSSING)
TO ACTIVATE PRESS: 649*
TO DE-ACTIVATE PRESS: 649*
(ACTIVATION WILL TIME OUT AFTER 60 SEC.)
REMOTE DTMF LIGHTING ACTIVATION
(ACTIVATES FLASHING LIGHTS ONLY)
TO ACTIVATE PRESS: 6491*
TO DE-ACTIVATE PRESS: 6491*
(ACTIVATION WILL TIME OUT AFTER 60 SEC.)
NOTES:
ALL WIRING TO BE #16AWG UNLESS NOTED OTHERWISE.
* = ECHELON CONNECTIONS NOT TO EXCEED 53' IN LENGTH AND TOTAL LENGTH NOT TO EXCEED 430' WITH A MAXIMUM OF 8 NODES, RECOMMEND USE BELDEN WIRE CABLE #8461 OR EQUIVALENT.
✳ = CONNECT "E GND 1" AND "E GND 2" TO INDEPENDENT GROUND POINTS ON SIDE A AND SIDE B.
☆ = A80078 ECHELON TERMINATION UNIT TO TERMINATE ECHELON NETWORK.
PANEL "A2" CONNECTORS FOR CPU MODULE (A80403)
PANEL "A2" SEAR III (A80410), GFT (A80297-2) AND VHF (A80276) HOOK-UPS
DESIGNED BY: JLM 06-28-12
DRAWN BY: XRL 06-28-12
CHECKED BY: PEH 07-25-12
IN SERVICE: - -
NORFOLK SOUTHERN
OFFICE OF ASS'T. VICE PRESIDENT COMM. & SIGNAL, ATLANTA, GA.
M.P.: CJ-217.50
MIAMISBURG, OH
FLGS AT RICHARD ST
DAYTON DISTRICT
FILE No. R-
CADD or DWG. No. 82112174.12
SHEET No. 12 of 25
REVISION INITIALS
PROPERTY
PENNSYLVANIA R.R.

TO CONFIGURE SEARIII PRESS SITE SETUP KEY.
USE ARROW KEYS TO MAKE SELECTION.
PRESS ENTER AFTER SELECTION HAS BEEN MADE.

	SITE SET UP PROCEDURE	
	FUNCTION	LED DISPLAY
	DATE/TIME	
	AUTOMATIC DST ADJUSTMENT	YES
	TIME ZONE	EST
	SITE NAME	RICHARD ST
	MILEPOST	CJ-217.50
	DOT #	524649K
	TESTER TYPE	CROSSING
	DATE FORMAT	MM-DD-YYYY
	TEMP FORMAT	FAHRENHEIT
	INDICATE HOLD (SEC)	0
	INDICATE REFRESH (SEC)	60
	SITE ATCS	7.550.234.039.03.01
	SITE TYPE	NO COMMUNICATION
***	OFFICE ATCS ADDRESS	2.550.00.0000
***	PRIMARY HOP ADDR	7.RRR.LLL.GGG.XX.XX
***	BACKUP HOP ADDR 1	7.RRR.LLL.GGG.XX.XX
***	BACKUP HOP ADDR 2	7.RRR.LLL.GGG.XX.XX
***	POLL ID	1
***	MODE	GEN/ATCS
***	WAMS XID	DISABLED
***	OFFICE COMM DEVICE	MCM (ECHELON)
***	RADIO ATCS ADDR	7.RRR.LLL.GGG.01.01
***	PHONE #	(OFFICE NUMBER)
***	INIT STRING	
***	FIELD COMM	NONE
****	USER PORT	BAUD 57600, N, 8, 1, NONE
****	AUX PORT	BAUD 9600, N, 8, 1, NONE

VERIFY NUMBER OF BULBS: SENSOR #1	
CURR 1: LAMP SET UP	4 BULBS
CURR 2: LAMP SET UP	4 BULBS

VERIFY NUMBER OF BULBS: SENSOR #2	
CURR 1: LAMP SET UP	4 BULBS
CURR 2: LAMP SET UP	4 BULBS

	CONTROL SYSTEM CONFIGURATION MENU QUESTIONS	
	THE QUESTION	SELECT FROM MENU OPTION
	RESET NAMES AND MODULES?	YES
	RAILROAD NUMBER	550
	CROSSING CONFIGURATION	NORMAL
	AND 1 USED AS XR?	YES
	AND 2 USED AS XR?	NO
	AND 3 USED AS XR?	NO
	AND 4 USED AS XR?	NO
	AND 5 USED AS XR?	NO
	AND 6 USED AS XR?	NO
	AND 7 USED AS XR?	NO
	AND 8 USED AS XR?	NO
*	XR CONTROLLED BY FOREIGN RR	
	ENTRANCE GATES	2
*	GATES CONTROLLED BY FOREIGN RR	
	GATE POSITION FAIL TIME (SECONDS)	20
	BATTERY BANKS	2
	BATTERY MON USED	YES
	INTERNAL CROSSING CONTROLLERS	2
	EXTERNAL CROSSING CONTROLLERS	0
	VHF COMMUNICATOR	YES
	DTMF ACTIVATION	YES
*****	ACTIVATION CODE	649
	ACTIVATION TIMEOUT (SECONDS)	60
	ILOD MODULES	2
	ANY LED BULBS USED	NO
	AUTO INSPECTIONS	NO
	BELL SENSORS	1
**	BELL SENSOR TSS1	YES
**	BELL SENSOR TSS2	NO
**	BELL SENSOR TSS3	NO
**	BELL SENSOR TSS4	NO
**	BELL SENSOR TSS5	NO
**	BELL SENSOR TSS6	NO
**	BELL SENSOR TSS7	NO
**	BELL SENSOR TSS8	NO

CONTROL SYSTEM CONFIGURATION MENU QUESTIONS (CONT.)	
BELL ON	GATES LOWERING
GFT'S	YES
BATTERIES ON GFT1	2
GATE TIP SENSORS	YES
RTU	NO
VHF VOICE CHANNEL	2
VHF DATA CHANNEL	2
USE CELL MODEM NON-CRITICAL FEATURE	NO
FULL APPROACH MOVES ALARM	ACTIVATE

PROGRAM MENU QUESTIONS	PROGRAM
EDIT DIGITAL INPUTS	NO
EDIT BATTERIES	NO
EDIT RELAYS	NO
EDIT INDICATOR LEDS	NO
EDIT TEST LEDS	NO
EDIT ILOD SENSORS	NO
EDIT VHF SETTINGS	NO
GCP4K ATCS SUBNODE	16

NOTES:

* = DISPLAYED IF CROSSING CONFIGURATION IS SPLIT GATE

** = OPTIONS: IF BELL SENSOR = 0, THEN BELL FIELDS ARE NOT USED.

*** = IF SITE TYPE = NO COMMUNICATION, THEN THESE OPTIONS ARE NOT DISPLAYED

**** = THESE SETTINGS SHOULD BE LEFT AT THE DEFAULT SETTING.

***** = USE LAST 3 NUMBERS FROM DOT NUMBER

SEAR III PROGRAMMING SETUP

DESIGNED BY: JLM 06-28-12	NORFOLK SOUTHERN	
DRAWN BY: XRL 06-28-12	OFFICE OF ASS'T. VICE PRESIDENT COMM. & SIGNAL, ATLANTA, GA.	M.P.: CJ-217.50
CHECKED BY: PEH 07-25-12	MIAMISBURG, OH FLGS AT RICHARD ST	
IN SERVICE: - -	DAYTON DISTRICT	FILE No. R-
	CADD or DWG. No. 82112174.13	SHEET No. 13 of 25

REVISION INITIALS										

PROPERTY PENNSYLVANIA R.R.

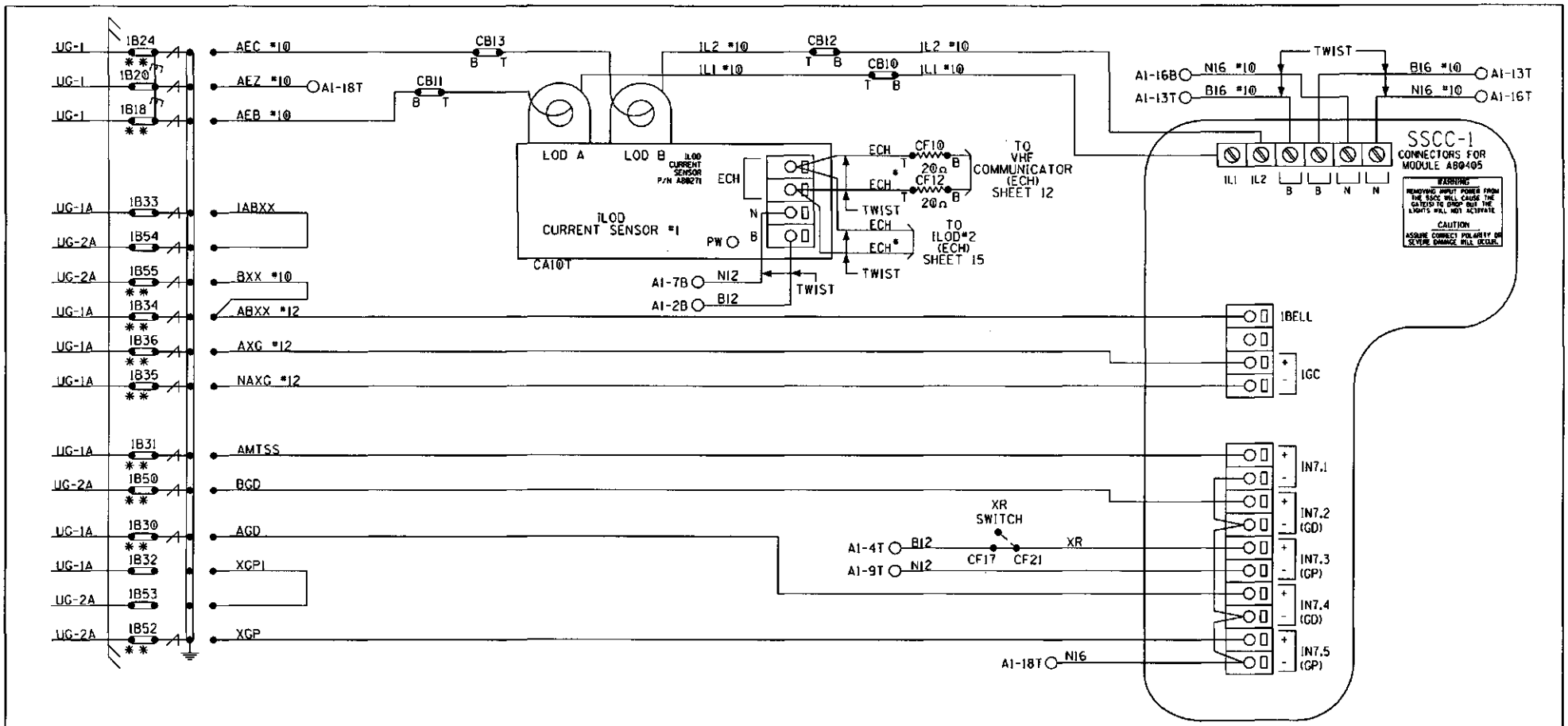

NOTES: ALL WIRING TO BE #16AWG UNLESS NOTED OTHERWISE.

* = ECHELON CONNECTIONS NOT TO EXCEED 53' IN LENGTH AND TOTAL LENGTH NOT TO EXCEED 430' WITH A MAXIMUM OF 8 NODES. RECOMMEND USE BELDEN WIRE CABLE #8461 OR EQUIVALENT.

** = TEST LINKS MUST BE OPENED TEMPORARILY FOR NEW COLD START OF NEW OR REPLACEMENT SSCC MODULE AND CAN ONLY BE CLOSED IN SEQUENCE WITH MFR. INSTRUCTIONS: SECTION 8 OF THE GCP 4000 REFERENCE MANUAL.

PANEL "A2" CONNECTORS FOR SSCC#1 MODULE (A80405)
ILOD#1 (A80271) HOOK-UP

DESIGNED BY: JLM 06-28-12	NORFOLK SOUTHERN		
DRAWN BY: XRL 06-28-12	OFFICE OF ASS'T. VICE PRESIDENT COMM. & SIGNAL, ATLANTA, GA.	M.P.: CJ-217.50	
CHECKED BY: PEH 07-25-12	MIAMISBURG, OH FLGS AT RICHARD ST		
IN SERVICE: - -	DAYTON DISTRICT	FILE No. R-	
	CADD or DWG. No. 82112174.14	SHEET No. 14 of 25	

REVISION INITIALS											

PROPERTY PENNSYLVANIA R.R.

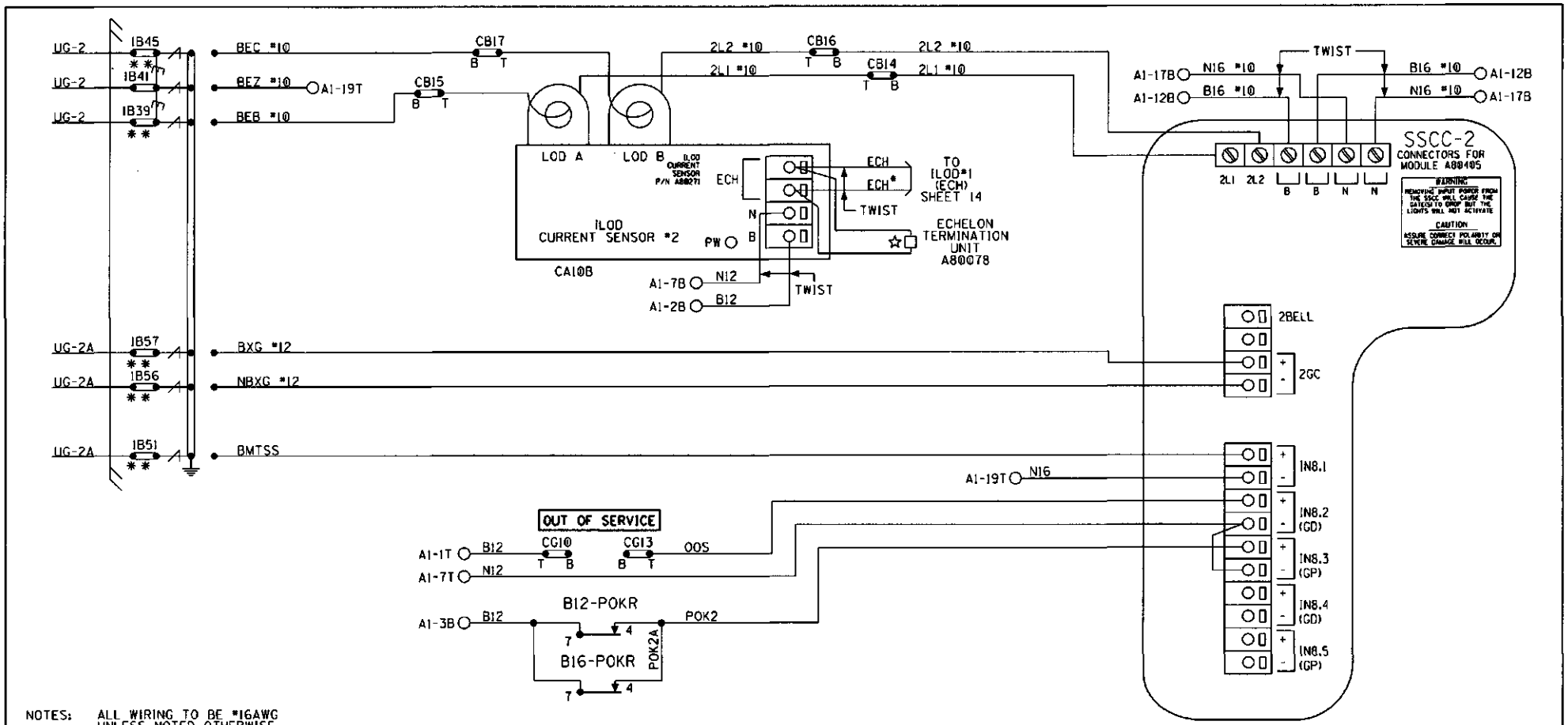

NOTES: ALL WIRING TO BE #16AWG UNLESS NOTED OTHERWISE.

• = ECHELON CONNECTIONS NOT TO EXCEED 53' IN LENGTH AND TOTAL LENGTH NOT TO EXCEED 430' WITH A MAXIMUM OF 8 NODES. RECOMMEND USE BELDEN WIRE CABLE #8461 OR EQUIVALENT.

** = TEST LINKS MUST BE OPENED TEMPORARILY FOR NEW COLD START OF NEW OR REPLACEMENT SSCC MODULE AND CAN ONLY BE CLOSED IN SEQUENCE WITH MFR. INSTRUCTIONS: SECTION 8 OF THE GCP 4000 REFERENCE MANUAL.

☆ = A80078 ECHELON TERMINATION UNIT TO TERMINATE ECHELON NETWORK.

PANEL "A2" CONNECTORS FOR SSCC#2 MODULE (A80405)
ILOD#2 (A80271) HOOK-UP

DESIGNED BY: JLM 06-28-12	NORFOLK SOUTHERN		
DRAWN BY: XRL 06-28-12	OFFICE OF ASS'T. VICE PRESIDENT COMM. & SIGNAL, ATLANTA, GA.	M.P.: CJ-217.50	
CHECKED BY: PEH 07-25-12	MIAMISBURG, OH FLGS AT RICHARD ST		
IN SERVICE: - -	DAYTON DISTRICT	FILE No. R-	
	CADD or DWG. No. 82112174.15	SHEET No. 15 of 25	

REVISION INITIALS

PROPERTY PENNSYLVANIA R.R.

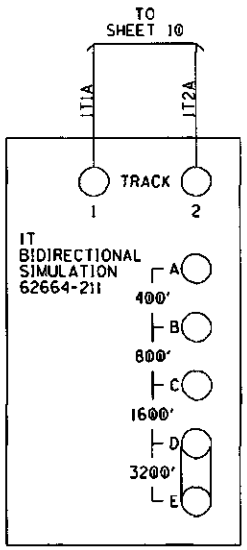

BA40

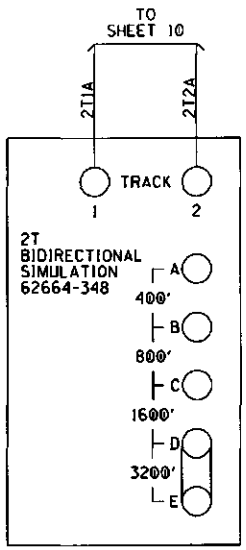

BB40

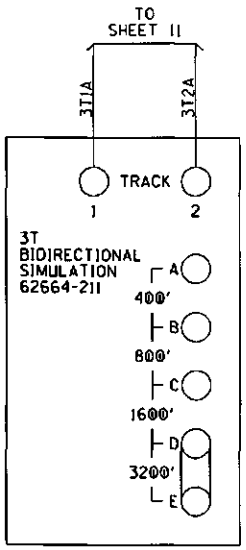

BA50

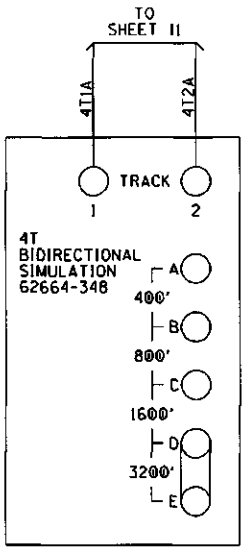

BB50

BIDIRECTIONAL SIMULATION COUPLER HOOK-UP

DESIGNED BY: JLM 06-28-12	NORFOLK SOUTHERN		
DRAWN BY: XRL 06-28-12	OFFICE OF ASS'T. VICE PRESIDENT COMM. & SIGNAL, ATLANTA, GA.	M.P.: CJ-217.50	
CHECKED BY: PEH 07-25-12	MIAMISBURG, OH FLGS AT RICHARD ST		
IN SERVICE: - -	DAYTON DISTRICT	FILE No. R-	
	CADD or DWG. No. 82112174.16	SHEET No. 16 of 25	

REVISION INITIALS

PROPERTY
PENNSYLVANIA R.R.

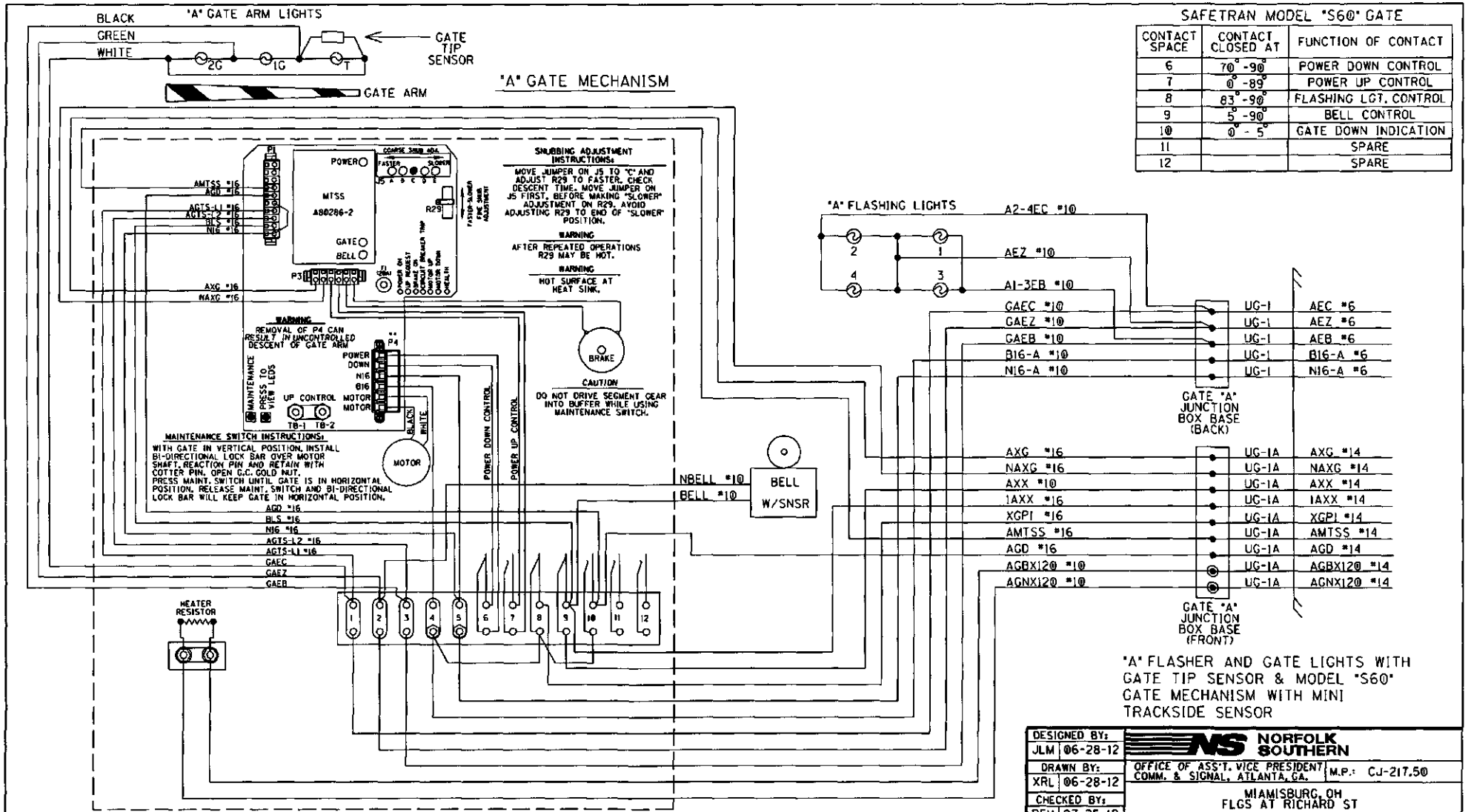

SAFETRAN MODEL "S60" GATE

CONTACT SPACE	CONTACT CLOSED AT	FUNCTION OF CONTACT
6	70°-90°	POWER DOWN CONTROL
7	0°-89°	POWER UP CONTROL
8	83°-90°	FLASHING LGT. CONTROL
9	5°-90°	BELL CONTROL
10	0°-5°	GATE DOWN INDICATION
11		SPARE
12		SPARE

"A" FLASHER AND GATE LIGHTS WITH GATE TIP SENSOR & MODEL "S60" GATE MECHANISM WITH MINI TRACKSIDE SENSOR

DESIGNED BY: JLM 06-28-12	NORFOLK SOUTHERN	
DRAWN BY: XRL 06-28-12	OFFICE OF ASS'T. VICE PRESIDENT COMM. & SIGNAL, ATLANTA, GA.	M.P.: CJ-217.50
CHECKED BY: PEH 07-25-12	MIAMISBURG, OH FLGS AT RICHARD ST	
IN SERVICE: - -	DAYTON DISTRICT	FILE No. R-
	CADD or DWG. No. 82112174.17	SHEET No. 17 of 25

REVISION INITIALS

PROPERTY PENNSYLVANIA R.R.

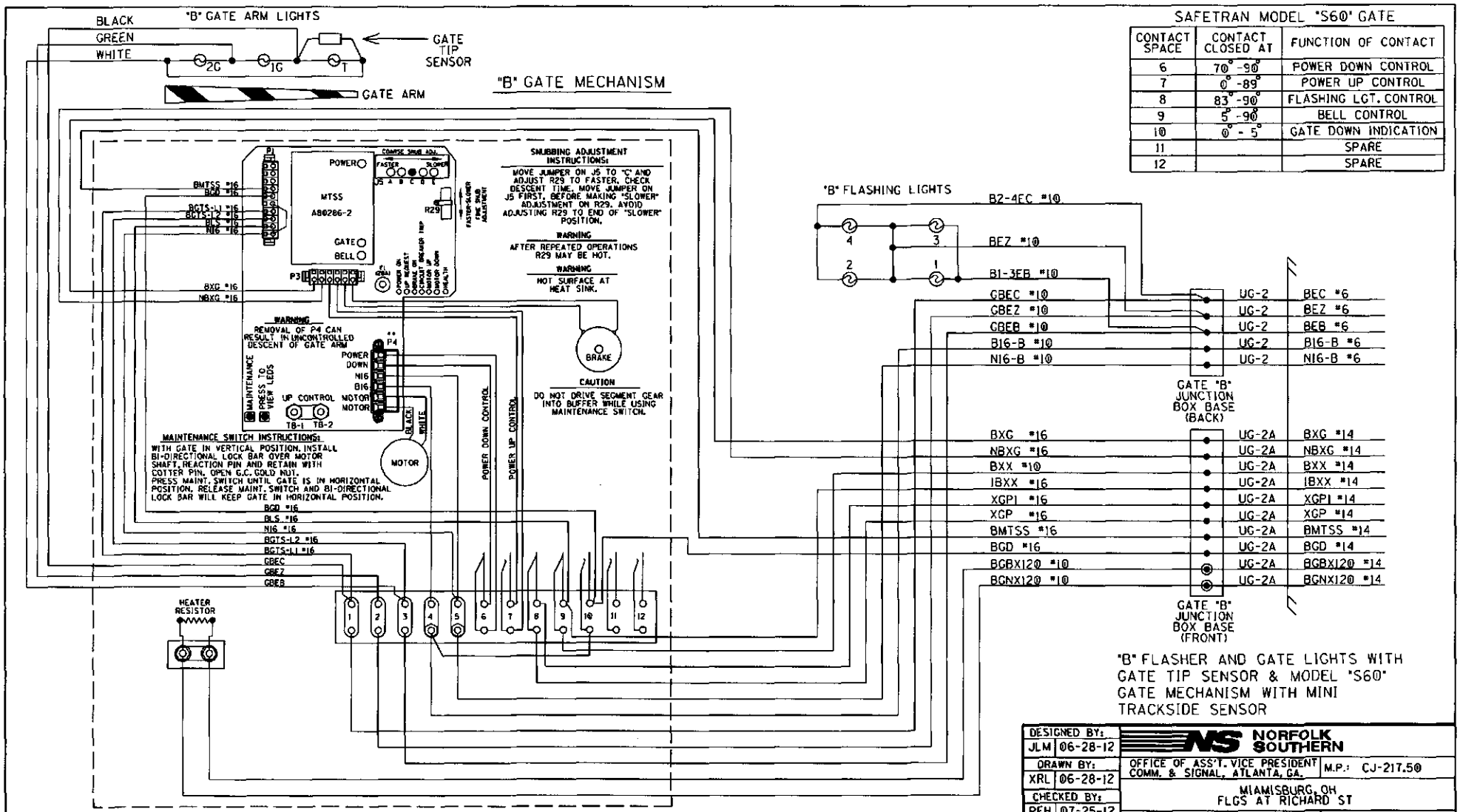

SAFETRAN MODEL "S60" GATE

CONTACT SPACE	CONTACT CLOSED AT	FUNCTION OF CONTACT
6	70°-90°	POWER DOWN CONTROL
7	0°-89°	POWER UP CONTROL
8	83°-90°	FLASHING LGT. CONTROL
9	5°-90°	BELL CONTROL
10	0°-5°	GATE DOWN INDICATION
11		SPARE
12		SPARE

"B" FLASHER AND GATE LIGHTS WITH GATE TIP SENSOR & MODEL "S60" GATE MECHANISM WITH MINI TRACKSIDE SENSOR

DESIGNED BY: JLM 06-28-12	NORFOLK SOUTHERN
DRAWN BY: XRL 06-28-12	OFFICE OF ASS'T. VICE PRESIDENT COMM. & SIGNAL, ATLANTA, GA. — M.P.: CJ-217.50
CHECKED BY: PEH 07-25-12	MIAMISBURG, OH FLGS AT RICHARD ST
IN SERVICE: - -	DAYTON DISTRICT — FILE No. R-
	CADD or DWG. No. 82112174.18 — SHEET No. 18 of 25

REVISION INITIALS

PROPERTY PENNSYLVANIA R.R.

LEFT TWO ROWS TERMINAL BOARD 1

"1A" "1B"

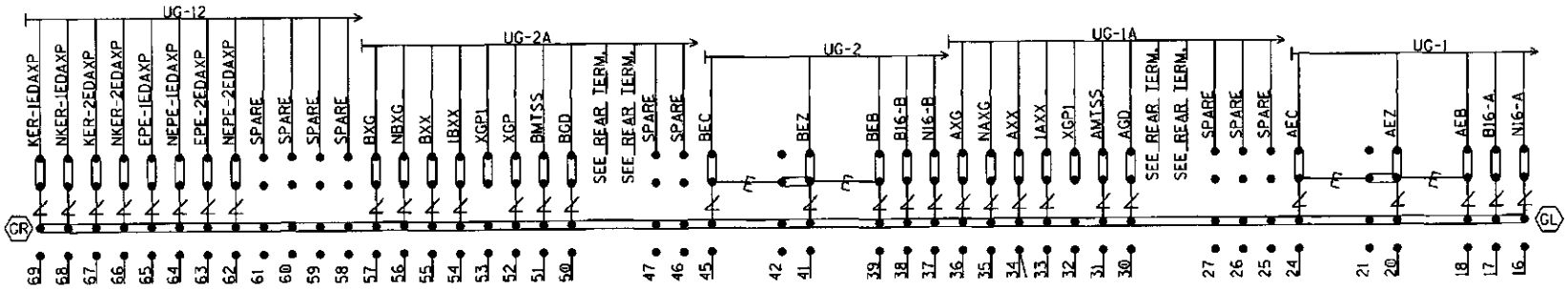

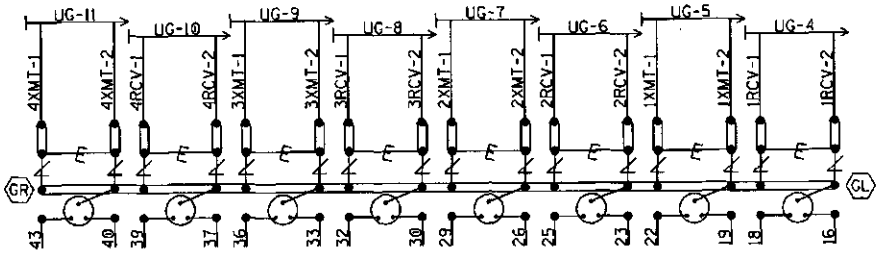

NOTE: INSTALL TEST LINKS ON ALL TRACK WIRES AND ON ALL LOW VOLTAGE UNDERGROUND CABLE TERMINATIONS.

SEE FARADAY SHIELD DETAILS - 1A & 1B FOR HOW THIS PORTION OF THE FARADAY SHIELD IS PREDRILLED. ONLY INSTALL AND USE THE TERMINALS NEEDED.

= Heavy Duty Equalizer (02270Ø-1X)

Clearview = Lightning Arrester (02258Ø-1X)

= LPC-1Ø56Ø-51

GR / GL = TERMINALS GROUNDED TO SHIELD. 4 POST BLOCKS USE EITHER - GR - SERMMI PART NO. 61278 GL - SERMMI PART NO. 61278-1.

BACKBOARD DETAIL - 1A & 1B

DESIGNED BY: JLM 06-28-12	NORFOLK SOUTHERN	
DRAWN BY: XRL 06-28-12	OFFICE OF ASS'T. VICE PRESIDENT COMM. & SIGNAL, ATLANTA, GA.	M.P.: CJ-217.50
CHECKED BY: PEH 07-25-12	MIAMISBURG, OH FLGS AT RICHARD ST	
IN SERVICE: - -	DAYTON DISTRICT	FILE No. R-
	CADD or DWG. No. 82112174.19	SHEET No. 19 of 25

REVISION INITIALS

PROPERTY PENNSYLVANIA R.R.

REAR VIEW OF LEFT TWO ROWS TERMINAL BOARD 1
"1A"
"1B"

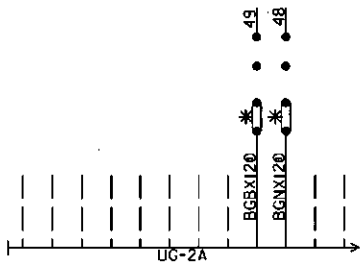

(SEE PREVIOUS SHEET FOR OTHER WIRES IN CABLE)

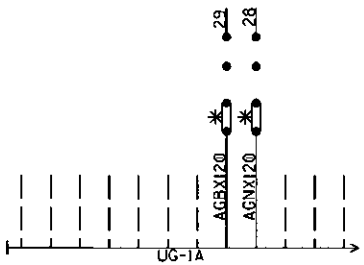

(SEE PREVIOUS SHEET FOR OTHER WIRES IN CABLE)

NOTE: ALL 120VAC AND ABOVE WILL BE WIRED TO THE REAR OF FARADAY BACKBOARD. INSULATED NUTS MUST BE USED ON ALL TERMINALS.

✱ = CLOSED DURING WINTER MONTHS

REAR OF FARADAY BACKBOARD
REAR BACKBOARD DETAIL - 1A & 1B

DESIGNED BY: JLM 06-28-12	NORFOLK SOUTHERN		
DRAWN BY: XRL 06-28-12	OFFICE OF ASS'T. VICE PRESIDENT COMM. & SIGNAL, ATLANTA, GA.	M.P.: CJ-217.50	
CHECKED BY: PEH 07-25-12	MIAMISBURG, OH FLGS AT RICHARD ST		
IN SERVICE: - -	DAYTON DISTRICT	FILE No. R-	
	CADD or DWG. No. 82112174.20	SHEET No. 20 of 25	

REVISION INITIALS										

PROPERTY
PENNSYLVANIA R.R.

NOTE: IF THE FARADAY SHIELD WOULD EVER NEED TO BE DRILLED IN THE FIELD, PROPER PRECAUTIONS MUST BE TAKEN TO INSURE METAL SHAVINGS DO NOT GET INTO EXISTING TERMINALS/WIRES.

AREA BELOW IS SCALED WITH AS=.75

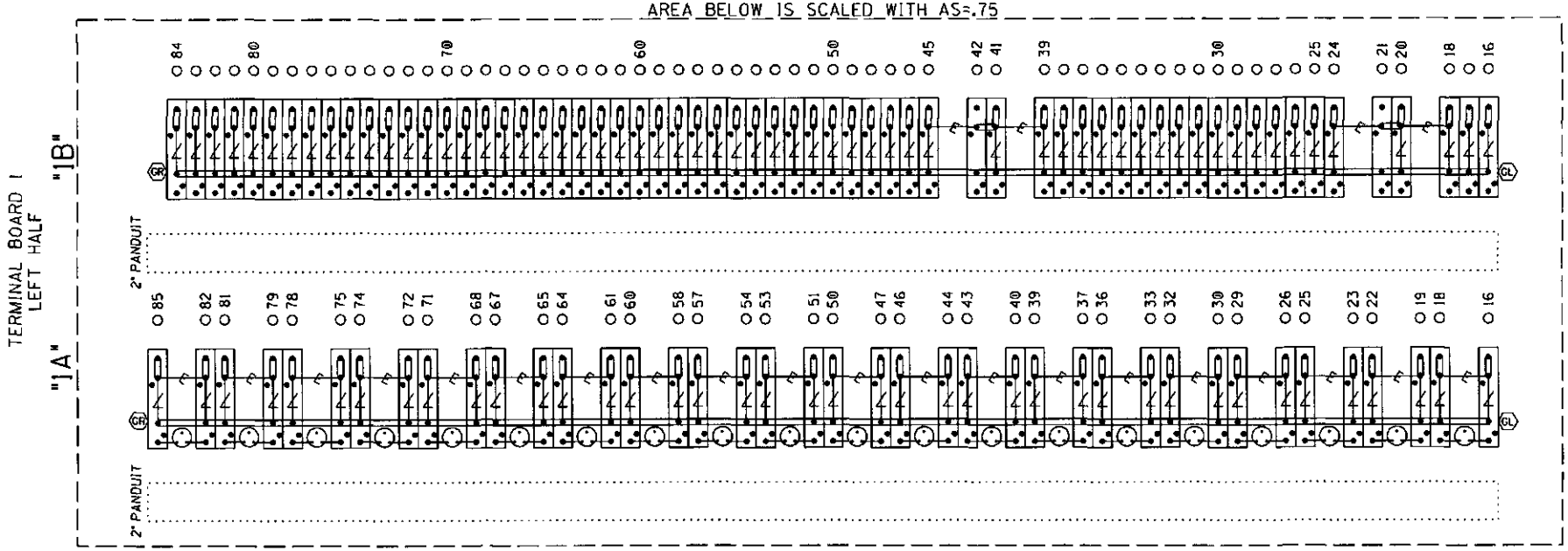

= Heavy Duty Equalizer (022700-1X)

Clearview = Lightning Arrester (022585-1X)

= LPC-10560-51

TERMINAL BOARD 1
LEFT TWO ROWS
FARADAY SHIELD DETAIL - 1A & 1B

= INDICATES PLACEMENT OF PANDUIT

THIS SHEET IS FOR REFERENCE ONLY, TO REFLECT HOW THE FARADAY SHIELD IS PREDRILLED. ONLY INSTALL AND USE THE TERMINALS NEEDED.

GR / GL = TERMINALS GROUNDED TO SHIELD. 4 POST BLOCKS USE EITHER - GR - SERMMI PART NO. 61278 GL - SERMMI PART NO. 61278-1.

DESIGNED BY: JLM	06-28-12
DRAWN BY: XRL	06-28-12
CHECKED BY: PEH	07-25-12
IN SERVICE:	- -

NORFOLK SOUTHERN

OFFICE OF ASS'T. VICE PRESIDENT COMM. & SIGNAL, ATLANTA, GA. | M.P.: CJ-217.50

MIAMISBURG, OH
FLGS AT RICHARD ST

DAYTON DISTRICT | FILE No. R-

CADD or DWG. No. B2112174.21 | SHEET No. 21 of 25

REVISION INITIALS

PROPERTY
PENNSYLVANIA R.R.

NOTE: IF THE FARADAY SHIELD WOULD EVER NEED TO BE DRILLED IN THE FIELD, PROPER PRECAUTIONS MUST BE TAKEN TO INSURE METAL SHAVINGS DO NOT GET INTO EXISTING TERMINALS/WIRES.

AREA BELOW IS SCALED WITH AS=.75

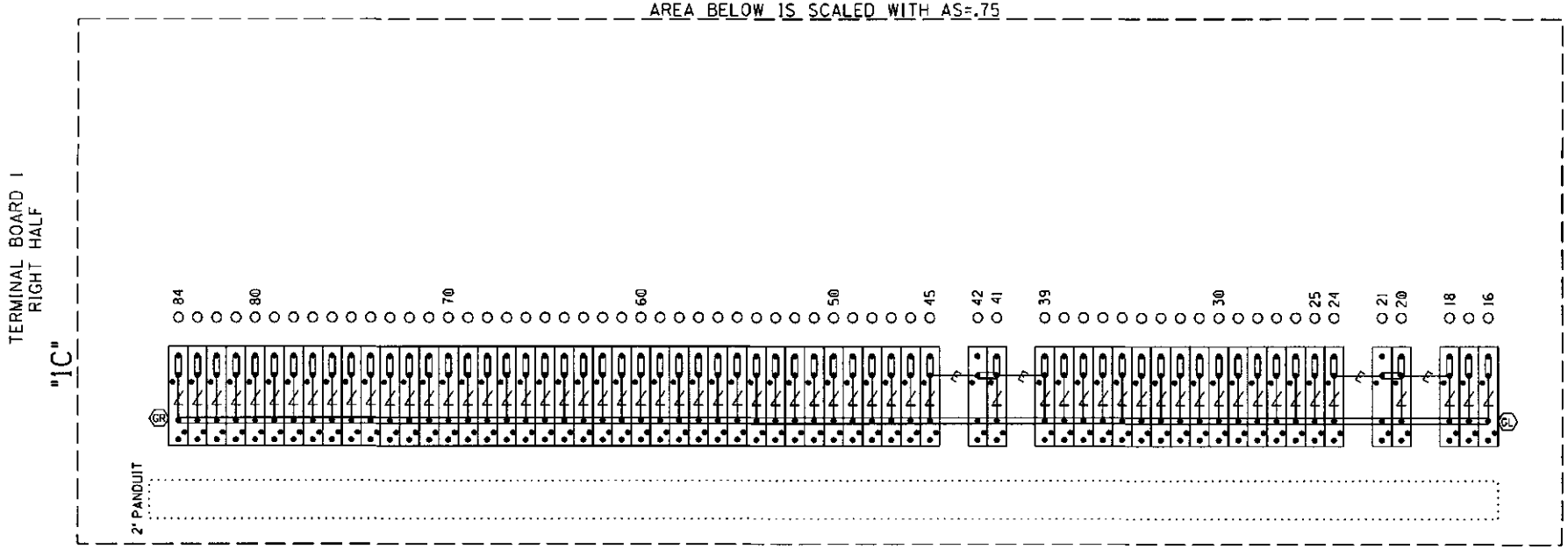

= Heavy Duty Equalizer (022700-1X)

Clearview = Lightning Arrester (022585-1X)

= LPC-10560-51

TERMINAL BOARD 1
RIGHT ROW
FARADAY SHIELD DETAIL - 1C

= INDICATES PLACEMENT OF PANDUIT

THIS SHEET IS FOR REFERENCE ONLY. TO REFLECT HOW THE FARADAY SHIELD IS PREDRILLED. ONLY INSTALL AND USE THE TERMINALS NEEDED.

GR / GL = TERMINALS GROUNDED TO SHIELD. 4 POST BLOCKS USE EITHER - GR - SERMMI PART NO. 61278 GL - SERMMI PART NO. 61278-1.

DESIGNED BY: JLM 06-28-12	NORFOLK SOUTHERN	
DRAWN BY: XRL 06-28-12	OFFICE OF ASS'T. VICE PRESIDENT COMM. & SIGNAL, ATLANTA, GA.	M.P.: CJ-217.50
CHECKED BY: PEH 07-25-12	MIAMISBURG, OH FLGS AT RICHARD ST	
IN SERVICE: - -	DAYTON DISTRICT	FILE No. R-
	CADD or DWG. No. 82112174.22	SHEET No. 22 of 25

REVISION INITIALS

PROPERTY PENNSYLVANIA R.R.

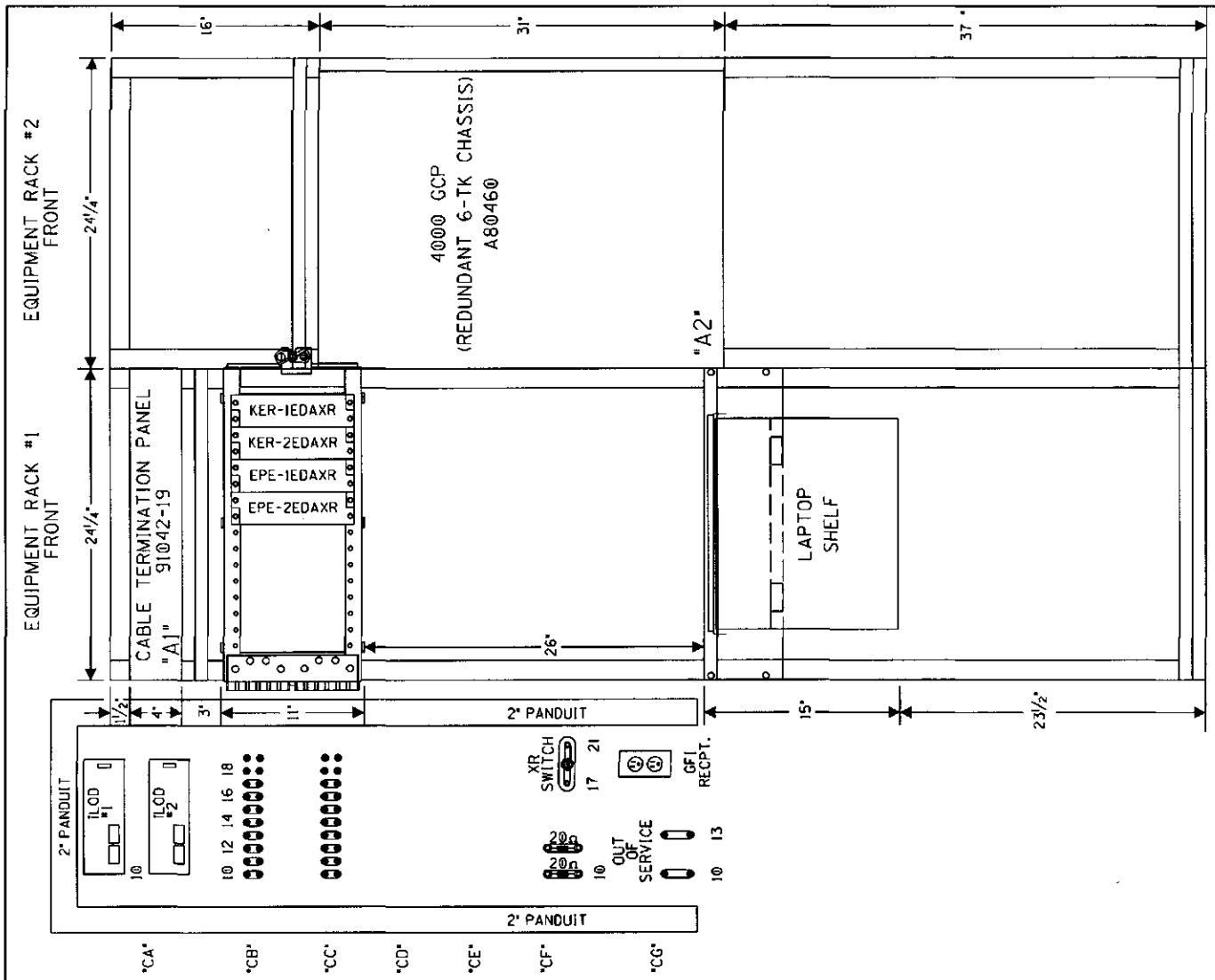

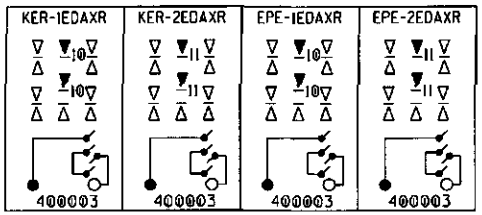

SIDE "C"

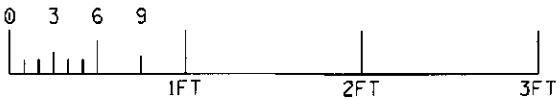

RACK PLACEMENT
6' X 8' HOUSE - SIDE "C"

DESIGNED BY: JLM 06-28-12	NORFOLK SOUTHERN	
DRAWN BY: XRL 06-28-12	OFFICE OF ASS'T. VICE PRESIDENT COMM. & SIGNAL, ATLANTA, GA.	M.P.: CJ-217.50
CHECKED BY: PEH 07-25-12	MIAMISBURG, OH FLGS AT RICHARD ST	
IN SERVICE: - -	DAYTON DISTRICT	FILE No. R-
	CADD or DWG. No. 82112174.23	SHEET No. 23 of 25

REVISION INITIALS

PROPERTY
PENNSYLVANIA R.R.

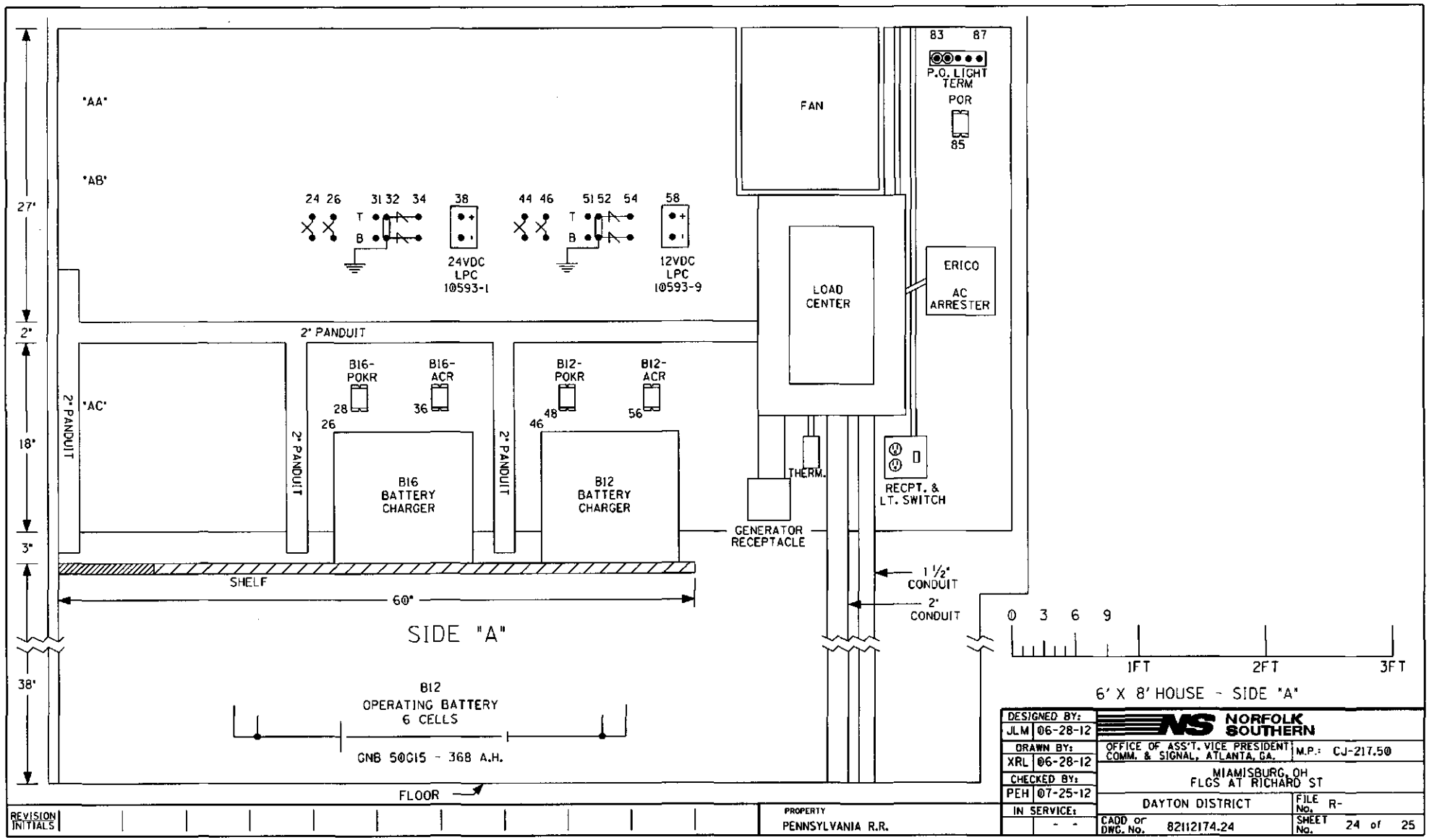

DESIGNED BY: JLM 06-28-12	NORFOLK SOUTHERN		
DRAWN BY: XRL 06-28-12	OFFICE OF ASS'T. VICE PRESIDENT COMM. & SIGNAL, ATLANTA, GA.	M.P.: CJ-217.50	
CHECKED BY: PEH 07-25-12	MIAMISBURG, OH FLGS AT RICHARD ST		
IN SERVICE: - -	DAYTON DISTRICT	FILE No. R-	
	CADD or DWG. No. 82112174.24	SHEET No. 24 of 25	

REVISION INITIALS

PROPERTY
PENNSYLVANIA R.R.

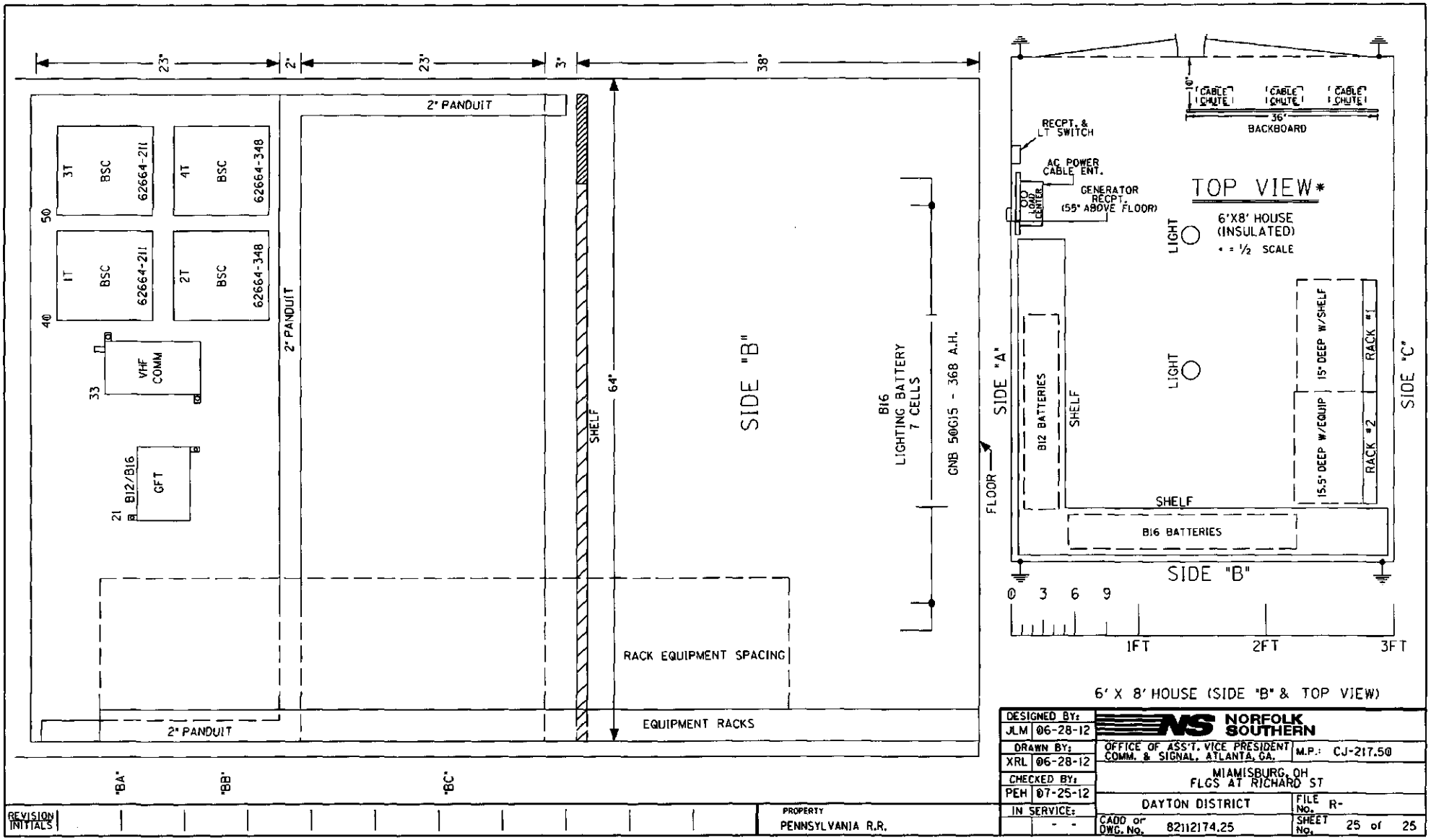

6' X 8' HOUSE (SIDE "B" & TOP VIEW)

DESIGNED BY: JLM 06-28-12	NORFOLK SOUTHERN		
DRAWN BY: XRL 06-28-12	OFFICE OF ASS'T. VICE PRESIDENT COMM. & SIGNAL, ATLANTA, GA.	M.P.: CJ-217.50	
CHECKED BY: PEH 07-25-12	MIAMISBURG, OH FLGS AT RICHARD ST		
IN SERVICE: - -	DAYTON DISTRICT	FILE No. R-	
	CADD or DWG. No. 82112174.25	SHEET No. 25 of 25	

REVISION INITIALS															

PROPERTY
PENNSYLVANIA R.R.

SH. NO.	CONTENTS
NX1	INDEX SHEET
1	OUTSIDE PLAN
2	WIRING FOR GEO TRACK 1W & 2W UNITS
3	TRACK 1W CODE INPUTS & OUTPUTS
4	1W TRACK EXTENDED UNIT GEO MODULES AND I/O PINOUTS
5	TK 1W GEO OPERATING PARAMETERS
6	TRACK 2W CODE INPUTS & OUTPUTS
7	2W TRACK EXTENDED UNIT GEO MODULES AND I/O PINOUTS
8	TK 2W GEO OPERATING PARAMETERS
9	GEO LINE CIRCUITS
10	LOAD CENTER WIRING
11	SEAR II EVENT RECORDER & VHF RADIO
12	SEAR II SET UP CHART AND GROUND FAULT TESTER
13	BACKBOARD DETAIL - 1A & 1B
14	FARADAY SHIELD DETAIL - 1A & 1B
15	PLACEMENT PLAN - TOP VIEW
16	PLACEMENT PLAN - SIDE "B"
17	PLACEMENT PLAN - SIDE "C"
18	PLACEMENT PLAN - SIDE "D"
19	CABLE PLAN

NEW SHEET
#10.1376
JLM/XRL
06-28-12
RED = IN
YELLOW = OUT
CHECKED BY PEH
07-27-12

IN SERVICE_____ SIGNED _____ DATE

☐ S&E ENGINEERING COPY
☐ CONSTRUCTION OFFICE COPY
RETURN TO S&E ENG. AFTER COMPLETION
☐ FIELD COPY
RETURN TO CASE AFTER COMPLETION
☐ PROJECT ENGINEER COPY

INDEX SHEET

DESIGNED BY: JLM 06-28-12	NORFOLK SOUTHERN	
DRAWN BY: XRL 06-28-12	OFFICE OF ASS'T. VICE PRESIDENT COMM. & SIGNAL, ATLANTA, GA.	M.P.: CJ-216.8
CHECKED BY: PEH 07-27-12	SHARONVILLE, OH TO LONDON, OH CP 216 - WEST END GEO UNITS	
IN SERVICE:	DAYTON DISTRICT	FILE No. R-
	CADD or DWG. No. 82112168.NX1	SHEET No. 1 of 1

REVISION INITIALS

PROPERTY
PENNSYLVANIA R.R.

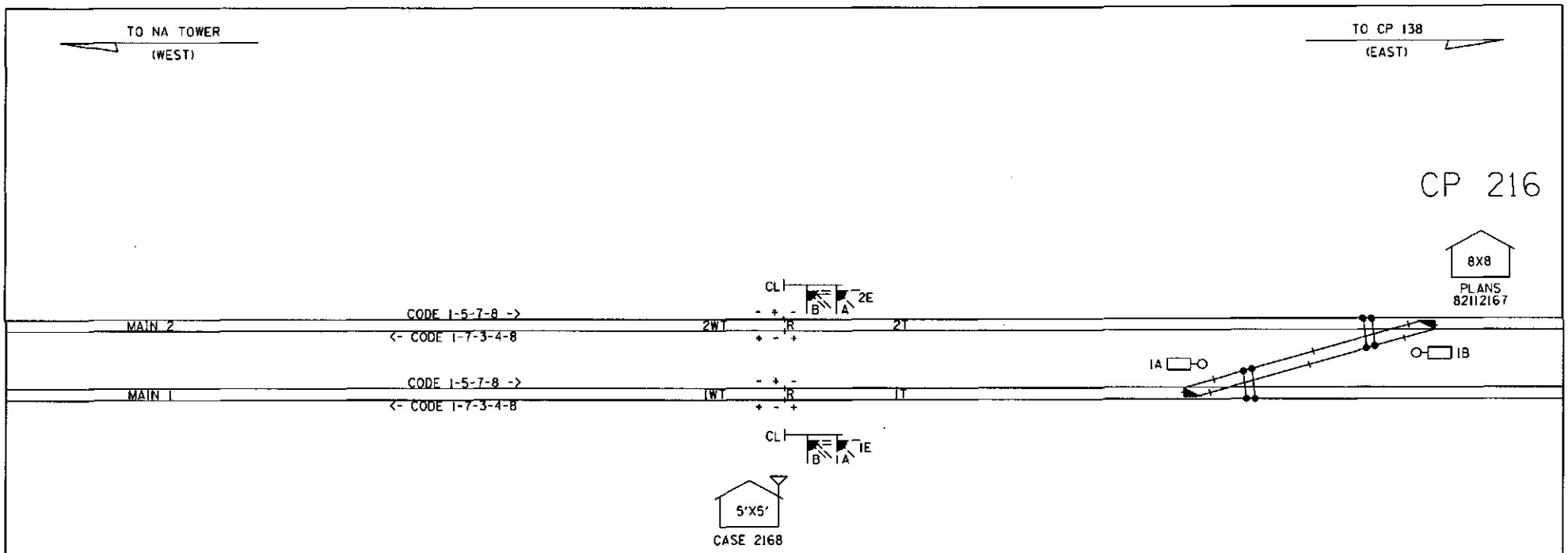

#10.1376
JLM/XRL
06-28-12
RED = IN
YELLOW = OUT
CHECKED BY PEH
07-27-12

OUTSIDE PLAN

DESIGNED BY: BWL 04-04-07	NORFOLK SOUTHERN		
DRAWN BY: SSC 04-04-07	OFFICE OF ASS'T. VICE PRESIDENT COMM. & SIGNAL, ATLANTA, GA.	M.P.: CJ-216.8	
CHECKED BY: SJR 05-21-07	SHARONVILLE, OH TO LONDON, OH CP 216 - WEST END GEO UNITS		
IN SERVICE: EPH 10-17-07	DAYTON DISTRICT	FILE No. R-2221	
	CADD or DWG. No. 82112168.01	SHEET No. 1 of 19	

REVISION INITIALS

PROPERTY
PENNSYLVANIA R.R.

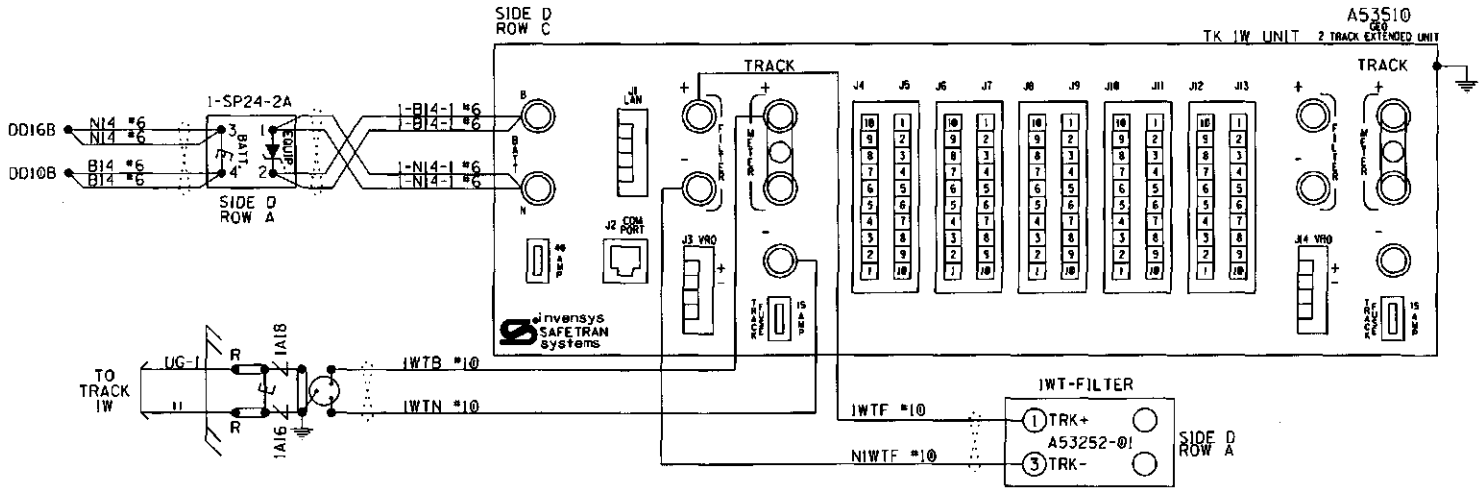

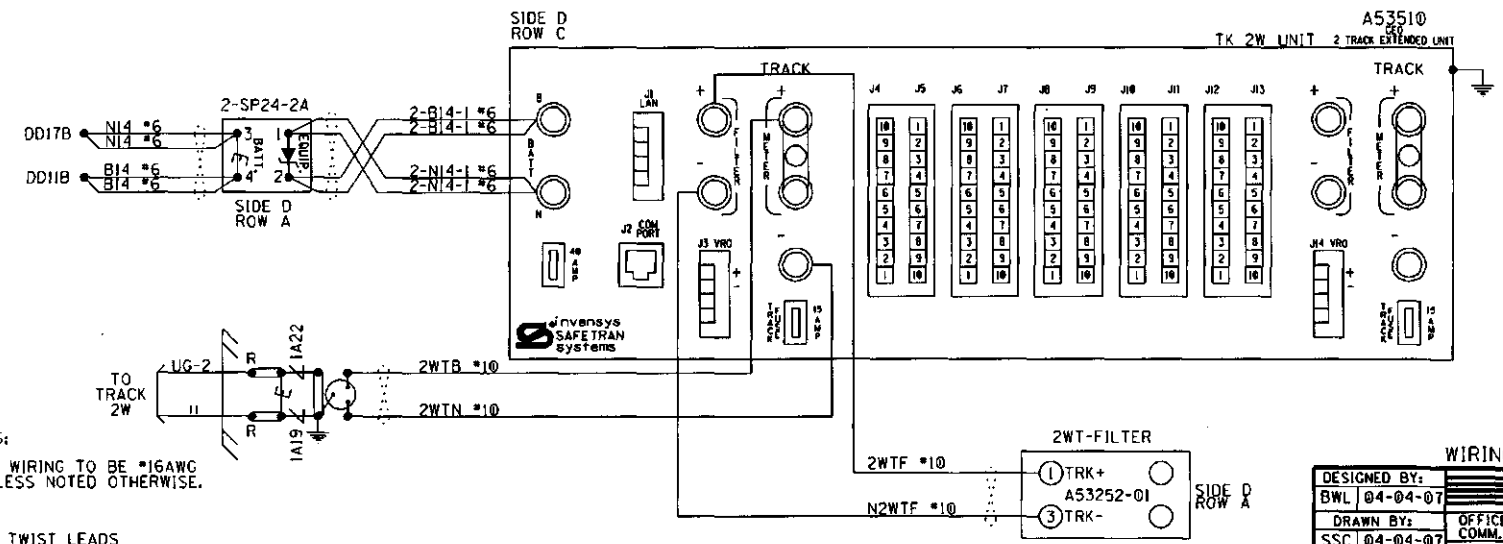

NOTES:

1. ALL WIRING TO BE #16AWG UNLESS NOTED OTHERWISE.

2. = TWIST LEADS

WIRING FOR GEO TRACK 1W & 2W UNITS

DESIGNED BY: BWL 04-04-07	NORFOLK SOUTHERN	
DRAWN BY: SSC 04-04-07	OFFICE OF ASS'T. VICE PRESIDENT COMM. & SIGNAL, ATLANTA, GA.	M.P.: CJ-216.8
CHECKED BY: SJR 05-21-07	SHARONVILLE, OH TO LONDON, OH CP 216 - WEST END GEO UNITS	
IN SERVICE: EPH 10-17-07	DAYTON DISTRICT	FILE No. R-2221
	CADD or DWG. No. 82112168.02	SHEET No. 2 of 19

REVISION INITIALS										

PROPERTY
PENNSYLVANIA R.R.

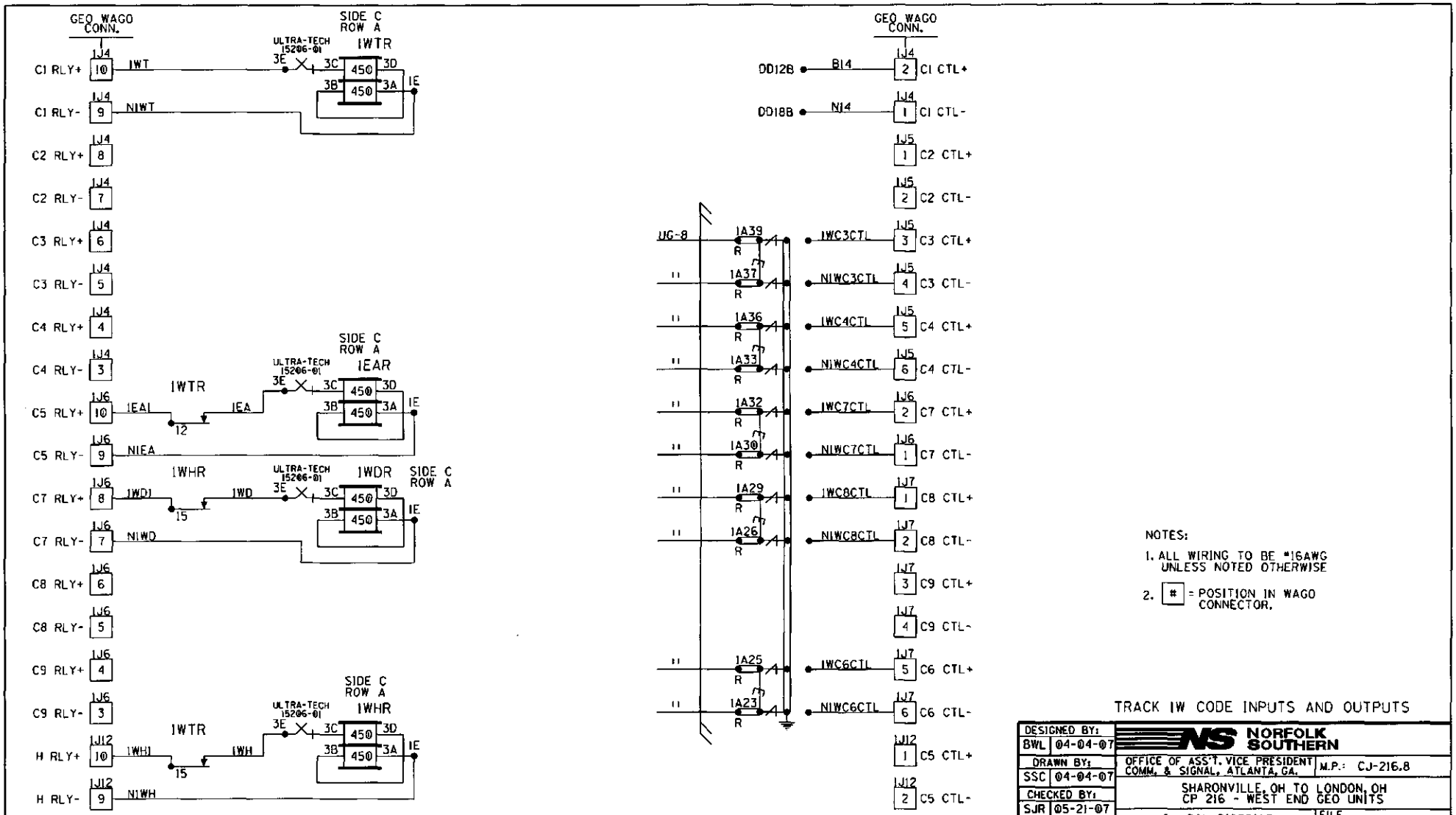

NOTES:

1. ALL WIRING TO BE #16AWG UNLESS NOTED OTHERWISE
2. [#] = POSITION IN WAGO CONNECTOR.

TRACK 1W CODE INPUTS AND OUTPUTS

DESIGNED BY: BWL 04-04-07	NORFOLK SOUTHERN	
DRAWN BY: SSC 04-04-07	OFFICE OF ASS'T. VICE PRESIDENT COMM. & SIGNAL, ATLANTA, GA.	M.P.: CJ-216.8
CHECKED BY: SJR 05-21-07	SHARONVILLE, OH TO LONDON, OH CP 216 - WEST END GEO UNITS	
IN SERVICE: EPH 10-17-07	DAYTON DISTRICT	FILE No. R-2221
	CADD or DWG. No. 82112168.03	SHEET No. 3 of 19

REVISION INITIALS

PROPERTY PENNSYLVANIA R.R.

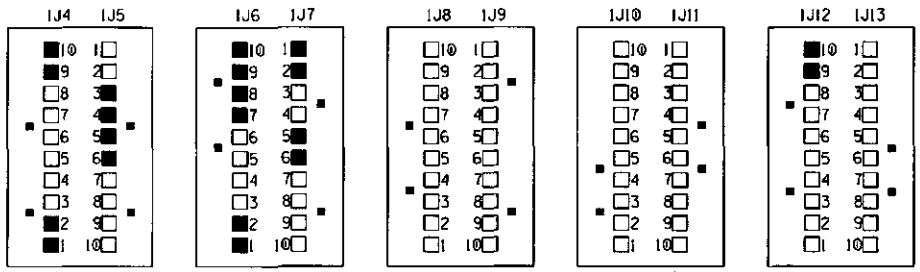

KEYING FINGERS: ■ = CUT

WAGO CONNECTION: ■ = USED

□ = NOT USED

MCF NAME: EGOAHFQT0002

UCN: 1911E01F

SIN: 700000000000

CRC: 581BAE01

MODULE SOFTWARE VERSIONS

A80414 CPU: 00 _ 31 .MEF CRC: 2617

A53285 TRACK: 01 _13 .MEF CRC: 48FD

A80413 RELAY I/O: 01 _06 .MEF CRC: 3433

GEO™
2 TRACK EXTENDED UNIT A53510

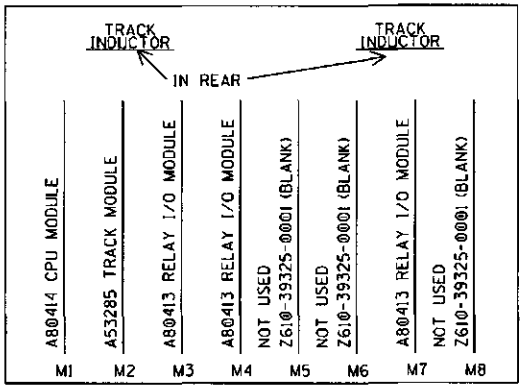

GEO A53510 CONNECTOR PINOUTS

PIN	1J4		1J6		1J8		1J10		1J12	
10	VR01 +	C1 RLY+	VR01 +	C5 RLY+					VR01 +	H RLY+
9	VR01 -	C1 RLY-	VR01 -	C5 RLY-					VR01 -	H RLY-
8	VR02 +	C2 RLY+	VR02 +	C7 RLY+					VR02 +	
7	VR02 -	C2 RLY-	VR02 -	C7 RLY-					VR02 -	
6	VR03 +	C3 RLY+	VR03 +	C8 RLY+					VR03 +	
5	VR03 -	C3 RLY-	VR03 -	C8 RLY-					VR03 -	
4	VR04 +	C4 RLY+	VR04 +	C9 RLY+					VR04 +	
3	VR04 -	C4 RLY-	VR04 -	C9 RLY-					VR04 -	
2	VP11 +	C1 CTL+	VP11 +	C7 CTL+					VP11 +	C5 CTL+
1	VP11 -	C1 CTL-	VP11 -	C7 CTL-					VP11 -	C5 CTL-
PIN	1J5		1J7		1J9		1J11		1J13	
1	VP12 +	C2 CTL+	VP12 +	C8 CTL+					VP12 +	
2	VP12 -	C2 CTL-	VP12 -	C8 CTL-					VP12 -	
3	VP13 +	C3 CTL+	VP13 +	C9 CTL+					VP13 +	
4	VP13 -	C3 CTL-	VP13 -	C9 CTL-					VP13 -	
5	VP14 +	C4 CTL+	VP14 +	C6 CTL+					VP14 +	
6	VP14 -	C4 CTL-	VP14 -	C6 CTL-					VP14 -	
7	N/A +		N/A +						N/A +	
8	N/A -		N/A -						N/A -	
9	N/A +		N/A +						N/A +	
10	N/A -		N/A -						N/A -	

1W TRACK EXTENDED UNIT
GEO MODULES AND I/O PINOUTS

DESIGNED BY: BWL 04-04-07	NORFOLK SOUTHERN	
DRAWN BY: SSC 04-04-07	OFFICE OF ASS'T. VICE PRESIDENT COMM. & SIGNAL, ATLANTA, GA.	M.P.: CJ-216.8
CHECKED BY: SJR 05-21-07	SHARONVILLE, OH TO LONDON, OH CP 216 - WEST END GEO UNITS	
IN SERVICE: EPH 10-17-07	DAYTON DISTRICT	FILE No. R-2221
	CADD or DWG. No. 82112168.04	SHEET No. 4 of 19

REVISION INITIALS

PROPERTY
PENNSYLVANIA R.R.

SETUP VITAL OPTIONS

VITAL USER TIMERS		
TIMERS	VALUE	UNITS
WEOBVVC	2	SEC
EEOBVVC	2	SEC

NON-VITAL USER OPTIONS				
OPTIONS	WEST TRACK (SLOT 2)		EAST TRACK (SLOT 8)	
CODE 5	WEOBC5 OFF	___	EEOBC5 OFF	___
	WEOBC5 ON TRACK	___	EEOBC5 ON TRACK	___
	WEOBC5 REPEAT	X	EEOBC5 REPEAT	X
	WEOBC5 ON	___	EEOBC5 ON	___

CODED TRACK OPERATING PARAMETERS

SLOT 2 (M2)		
PROPERTY	VALUE	UNITS
VCO VOLTAGE	*	mV
RECEIVE	TRUE	
TRANSMIT	TRUE	
CODE 5	ALTERNATING	
EC4 COMPATIBILITY	EC4 PLUS	
NON-VITAL CHANGE	1	CYCLES
VITAL CHANGE	2	CYCLES
SHUNT DROP	2	CYCLES
SHUNT PICK	5	CYCLES
CURRENT LIMIT	*	mA

RIO OPERATING PARAMETERS

SLOT 3 (M3)		
PROPERTY	VALUE	UNITS
VPI DEBOUNCE	20	mS

RIO OPERATING PARAMETERS

SLOT 4 (M4)		
PROPERTY	VALUE	UNITS
VPI DEBOUNCE	20	mS

RIO OPERATING PARAMETERS

SLOT 7 (M7)		
PROPERTY	VALUE	UNITS
VPI DEBOUNCE	20	mS

COMMENTS

WEOBC5/EEOBC5 = ALWAYS TO BE SET AS REPEAT ON AN END BOX TO ENABLE C5 SELECTION INPUTS.

WEOBVVC/EEOBVVC = VALID VITAL CODE TIMER. TIMER STARTS WHEN THE STATUS OF A VITAL CODE SELECTION INPUT CHANGES. A VALID CODE SELECTION MUST BE MADE BEFORE TIME EXPIRES. OTHERWISE NO VITAL CODE IS SENT.

NOTE: OPTIONS FOR THE EAST TRACK ARE IN THE PROGRAM, BUT DOES NOT APPLY TO A HALF BOX CONFIGURATION.

NOTE:

1. * = VALUE TO BE FILLED IN BY FIELD FORCES.

TK 1W GEO OPERATING PARAMETERS

DESIGNED BY: BLW 04-04-07	NORFOLK SOUTHERN		
DRAWN BY: SSC 04-04-07	OFFICE OF ASS'T. VICE PRESIDENT COMM. & SIGNAL, ATLANTA, GA.	M.P.: CJ-216.8	
CHECKED BY: SJR 05-21-07	SHARONVILLE, OH TO LONDON, OH CP 216 - WEST END GEO UNITS		
IN SERVICE: EPH 10-17-07	DAYTON DISTRICT	FILE No. R-2221	
	CADD or DWG. No. 82112168.05	SHEET No. 5 of 19	

REVISION INITIALS											

PROPERTY PENNSYLVANIA R.R.

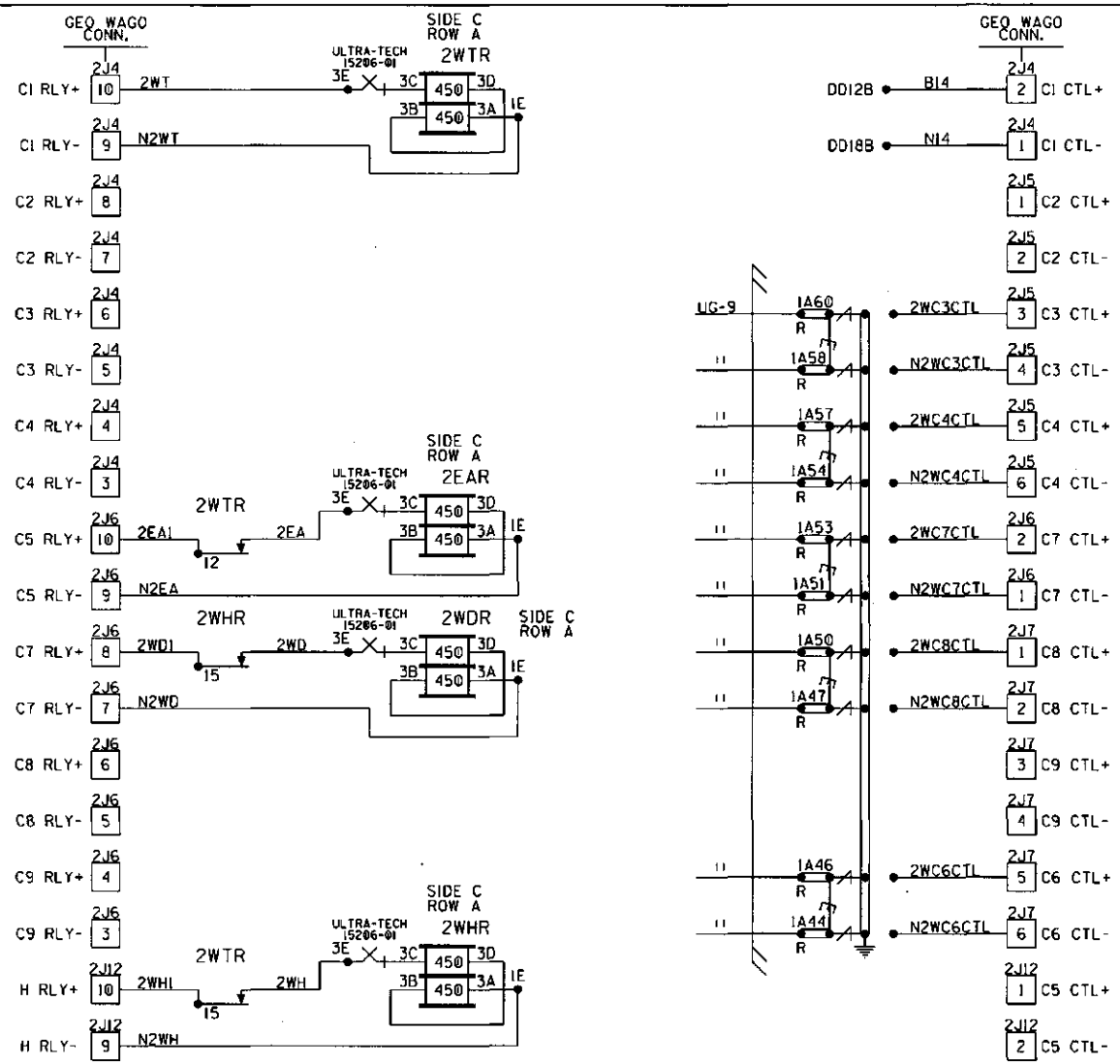

NOTES:

1. ALL WIRING TO BE #16AWG UNLESS NOTED OTHERWISE
2. [#] = POSITION IN WAGO CONNECTOR.

TRACK 2W CODE INPUTS AND OUTPUTS

DESIGNED BY: BWL 04-04-07	NORFOLK SOUTHERN		
DRAWN BY: SSC 04-04-07	OFFICE OF ASS'T. VICE PRESIDENT COMM. & SIGNAL, ATLANTA, GA.	M.P.: CJ-216.8	
CHECKED BY: SJR 05-21-07	SHARONVILLE, OH TO LONDON, OH CP 216 - WEST END GEO UNITS		
IN SERVICE: EPH 10-17-07	DAYTON DISTRICT	FILE No. R-2221	
	CADD or DWG. No. 82112168.06	SHEET No. 6 of 19	

REVISION INITIALS

PROPERTY PENNSYLVANIA R.R.

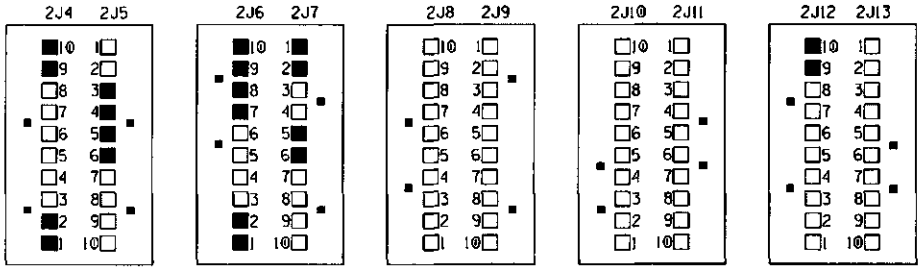

KEYING FINGERS: ■ = CUT

WAGO CONNECTION: ■ = USED

□ = NOT USED

MCF NAME: EGOAHFQTB002

UCN: 1911E01F

SIN: 700000000000

CRC: 581BAE01

MODULE SOFTWARE VERSIONS

A80414 CPU: 00 31 .MEF CRC: 2617

A53285 TRACK: 01 13 .MEF CRC: 48FD

A80413 RELAY I/O: 01 06 .MEF CRC: 3433

GEO™
2 TRACK EXTENDED UNIT A53510

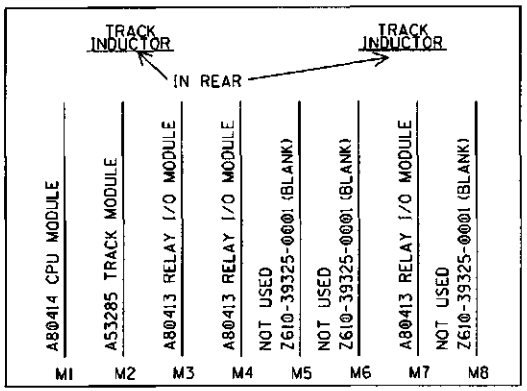

GEO A53510 CONNECTOR PINOUTS

PIN	2J4		2J6		2J8		2J10		2J12	
10	VR01 +	C1 RLY+	VR01 +	C5 RLY+					VR01 +	H RLY+
9	VR01 -	C1 RLY-	VR01 -	C5 RLY-					VR01 -	H RLY-
8	VR02 +	C2 RLY+	VR02 +	C7 RLY+					VR02 +	
7	VR02 -	C2 RLY-	VR02 -	C7 RLY-					VR02 -	
6	VR03 +	C3 RLY+	VR03 +	C8 RLY+					VR03 +	
5	VR03 -	C3 RLY-	VR03 -	C8 RLY-					VR03 -	
4	VR04 +	C4 RLY+	VR04 +	C9 RLY+					VR04 +	
3	VR04 -	C4 RLY-	VR04 -	C9 RLY-					VR04 -	
2	VP11 +	C1 CTL+	VP11 +	C7 CTL+					VP11 +	C5 CTL+
1	VP11 -	C1 CTL-	VP11 -	C7 CTL-					VP11 -	C5 CTL-
PIN	2J5		2J7		2J9		2J11		2J13	
1	VP12 +	C2 CTL+	VP12 +	C8 CTL+					VP12 +	
2	VP12 -	C2 CTL-	VP12 -	C8 CTL-					VP12 -	
3	VP13 +	C3 CTL+	VP13 +	C9 CTL+					VP13 +	
4	VP13 -	C3 CTL-	VP13 -	C9 CTL-					VP13 -	
5	VP14 +	C4 CTL+	VP14 +	C6 CTL+					VP14 +	
6	VP14 -	C4 CTL-	VP14 -	C6 CTL-					VP14 -	
7	N/A +		N/A +						N/A +	
8	N/A -		N/A -						N/A -	
9	N/A +		N/A +						N/A +	
10	N/A -		N/A -						N/A -	

2W TRACK EXTENDED UNIT
GEO MODULES AND I/O PINOUTS

DESIGNED BY: BWL 04-04-07	NORFOLK SOUTHERN		
DRAWN BY: SSC 04-04-07	OFFICE OF ASS'T. VICE PRESIDENT COMM. & SIGNAL, ATLANTA, GA.	M.P.: CJ-216.8	
CHECKED BY: SJR 05-21-07	SHARONVILLE, OH TO LONDON, OH CP 216 - WEST END GEO UNITS		
IN SERVICE: EPH 10-17-07	DAYTON DISTRICT	FILE No. R-2221	
	CADD or DWG. No. 82112168.07	SHEET No. 7 of 19	

REVISION INITIALS

PROPERTY
PENNSYLVANIA R.R.

SETUP VITAL OPTIONS

VITAL USER TIMERS		
TIMERS	VALUE	UNITS
WEOBVVC	2	SEC
EEOBVVC	2	SEC

NON-VITAL USER OPTIONS				
OPTIONS	WEST TRACK (SLOT 2)		EAST TRACK (SLOT 8)	
CODE 5	WEOBC5 OFF	____	EEOBC5 OFF	____
	WEOBC5 ON TRACK	____	EEOBC5 ON TRACK	____
	WEOBC5 REPEAT	X	EEOBC5 REPEAT	X
	WEOBC5 ON	____	EEOBC5 ON	____

CODED TRACK OPERATING PARAMETERS

SLOT 2 (M2)		
PROPERTY	VALUE	UNITS
VCO VOLTAGE	*	mV
RECEIVE	TRUE	
TRANSMIT	TRUE	
CODE 5	ALTERNATING	
EC4 COMPATIBILITY	EC4 PLUS	
NON-VITAL CHANGE	1	CYCLES
VITAL CHANGE	2	CYCLES
SHUNT DROP	2	CYCLES
SHUNT PICK	5	CYCLES
CURRENT LIMIT	*	mA

RIO OPERATING PARAMETERS

SLOT 3 (M3)		
PROPERTY	VALUE	UNITS
VPI DEBOUNCE	20	mS

RIO OPERATING PARAMETERS

SLOT 4 (M4)		
PROPERTY	VALUE	UNITS
VPI DEBOUNCE	20	mS

RIO OPERATING PARAMETERS

SLOT 7 (M7)		
PROPERTY	VALUE	UNITS
VPI DEBOUNCE	20	mS

COMMENTS

WEOBC5/EEOBC5 = ALWAYS TO BE SET AS REPEAT ON AN END BOX TO ENABLE C5 SELECTION INPUTS.

WEOBVVC/EEOBVVC = VALID VITAL CODE TIMER. TIMER STARTS WHEN THE STATUS OF A VITAL CODE SELECTION INPUT CHANGES. A VALID CODE SELECTION MUST BE MADE BEFORE TIME EXPIRES. OTHERWISE NO VITAL CODE IS SENT.

NOTE: OPTIONS FOR THE EAST TRACK ARE IN THE PROGRAM, BUT DOES NOT APPLY TO A HALF BOX CONFIGURATION.

NOTE:

1. * = VALUE TO BE FILLED IN BY FIELD FORCES.

TK 2W GEO OPERATING PARAMETERS

DESIGNED BY: BWL 04-04-07	NORFOLK SOUTHERN	
DRAWN BY: SSC 04-04-07	OFFICE OF ASS'T. VICE PRESIDENT COMM. & SIGNAL, ATLANTA, GA.	M.P.: CJ-216.8
CHECKED BY: SJR 05-21-07	SHARONVILLE, OH TO LONDON, OH CP 216 - WEST END GEO UNITS	
IN SERVICE: EPH 10-17-07	DAYTON DISTRICT	FILE No. R-2221
	CADD or DWG. No. 82112168.08	SHEET No. 8 of 19

REVISION INITIALS

PROPERTY PENNSYLVANIA R.R.

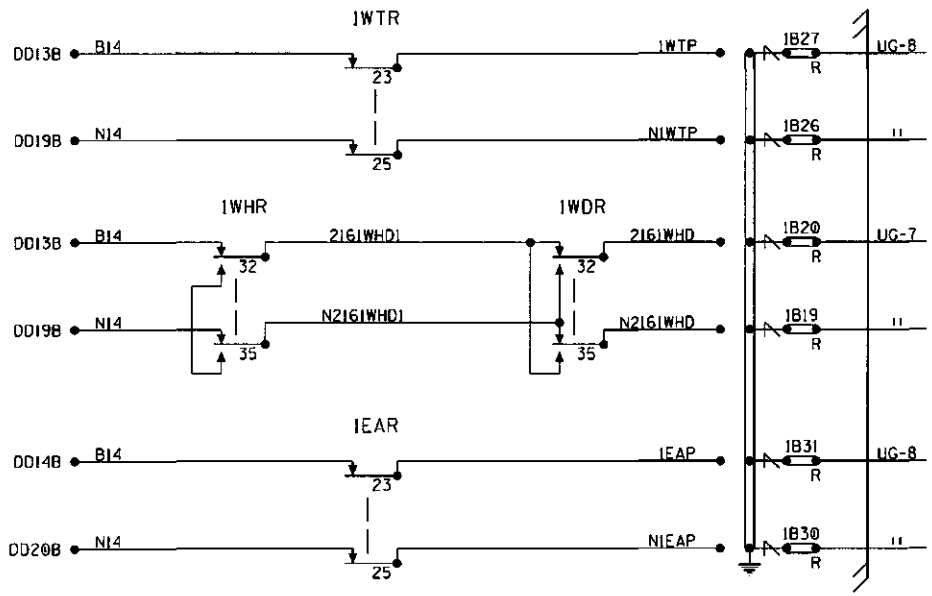

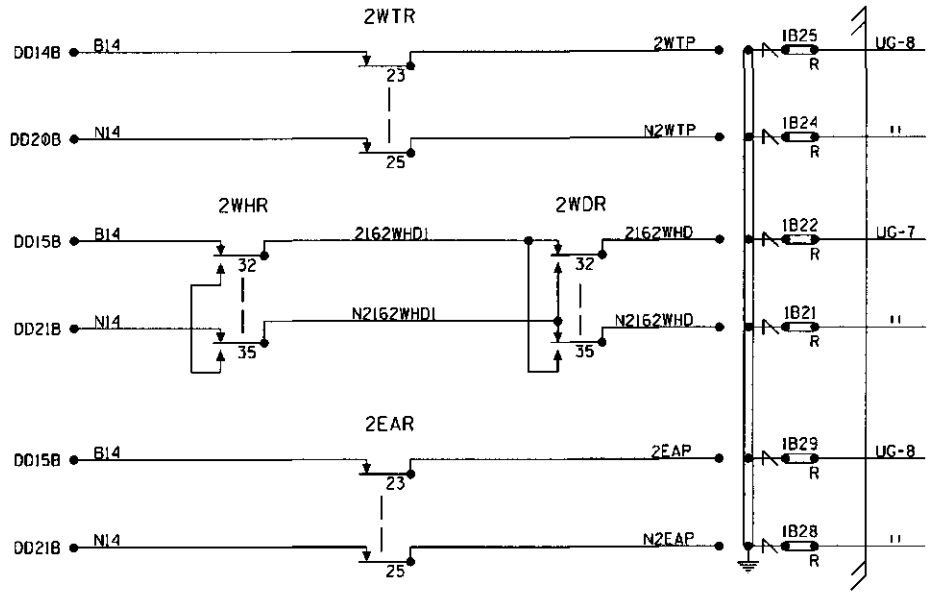

NOTE:

1. ALL WIRING TO BE #16AWG UNLESS NOTED OTHERWISE.

GEO LINE CIRCUITS

DESIGNED BY: BWL 04-04-07	NORFOLK SOUTHERN	
DRAWN BY: SSC 04-04-07	OFFICE OF ASS'T. VICE PRESIDENT COMM. & SIGNAL, ATLANTA, GA.	M.P.: CJ-216.8
CHECKED BY: SJR 05-21-07	SHARONVILLE, OH TO LONDON, OH CP 216 - WEST END GEO UNITS	
IN SERVICE: EPH 10-17-07	DAYTON DISTRICT	FILE No. R-2221
	CADD or DWG. No. 82112168.09	SHEET No. 9 of 19

REVISION INITIALS										

PROPERTY
PENNSYLVANIA R.R.

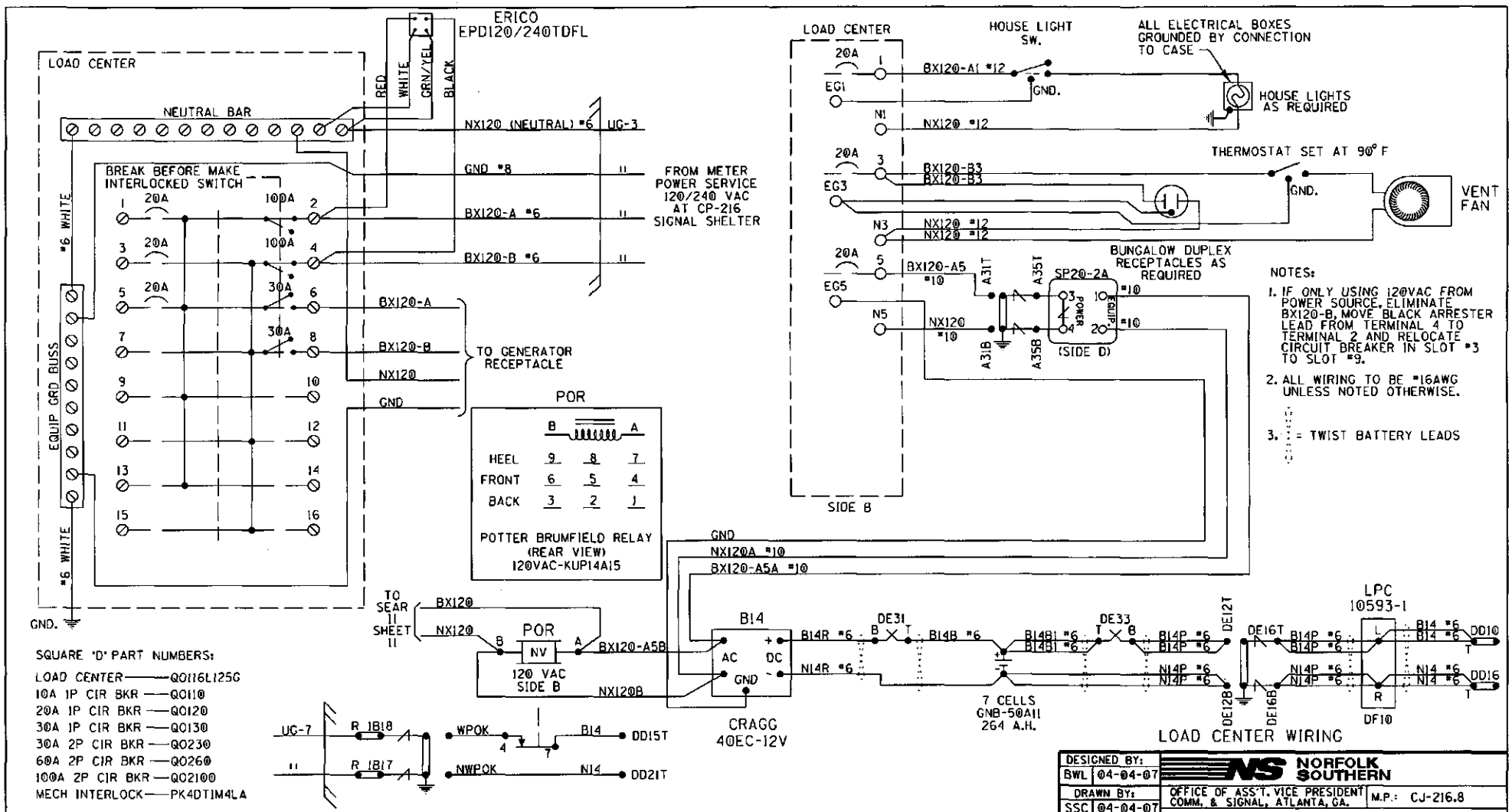
ERICO
EPD120/240TDFL
LOAD CENTER
NEUTRAL BAR
RED
WHITE
GRN/YEL
BLACK
NX120 (NEUTRAL) *6
UG-3
GND *8
BX120-A *6
BX120-B *6
FROM METER POWER SERVICE 120/240 VAC AT CP-216 SIGNAL SHELTER
BREAK BEFORE MAKE INTERLOCKED SWITCH
20A
100A
30A
*6 WHITE
EQUIP GRD BUSS
BX120-A
BX120-B
NX120
GND
TO GENERATOR RECEPTACLE
POR
B
A
HEEL 9 8 7
FRONT 6 5 4
BACK 3 2 1
POTTER BRUMFIELD RELAY
(REAR VIEW)
120VAC-KUP14A15
GND.
LOAD CENTER
20A
EG1
N1
NX120 *12
BX120-A1 *12
HOUSE LIGHT SW.
GND.
ALL ELECTRICAL BOXES GROUNDED BY CONNECTION TO CASE
HOUSE LIGHTS AS REQUIRED
THERMOSTAT SET AT 90° F
EG3
N3
BX120-B3
VENT FAN
EG5
N5
BX120-A5 *10
NX120 *10
A31T
A35T
A31B
A35B
SP20-2A
POWER
EQUIP
(SIDE D)
BUNGALOW DUPLEX RECEPTACLES AS REQUIRED
SIDE B
NOTES:
1. IF ONLY USING 120VAC FROM POWER SOURCE, ELIMINATE BX120-B, MOVE BLACK ARRESTER LEAD FROM TERMINAL 4 TO TERMINAL 2 AND RELOCATE CIRCUIT BREAKER IN SLOT *3 TO SLOT *9.
2. ALL WIRING TO BE *16AWG UNLESS NOTED OTHERWISE.
3. = TWIST BATTERY LEADS
GND
NX120A *10
BX120-A5A *10
TO SEAR 11 SHEET 11
BX120
NX120
POR
NV
120 VAC SIDE B
BX120-A5B
NX120B
B14
AC
DC
GND
CRAGG 40EC-12V
B14R *6
N14R *6
DE31
B14B *6
B14B1 *6
DE33
B14P *6
N14P *6
7 CELLS GNB-50A11 264 A.H.
DE12T
DE12B
DE16T
DE16B
LPC 10593-1
L
R
DF10
B14 *6
N14 *6
DD10
DD16
LOAD CENTER WIRING
UC-7
R 1B18
R 1B17
WPOK
NWPOK
B14
N14
DD15T
DD21T
SQUARE 'D' PART NUMBERS:
LOAD CENTER——QO116L125G
10A 1P CIR BKR——QO110
20A 1P CIR BKR——QO120
30A 1P CIR BKR——QO130
30A 2P CIR BKR——QO230
60A 2P CIR BKR——QO260
100A 2P CIR BKR——QO2100
MECH INTERLOCK——PK4DTIM4LA
GENERATOR RECEPTACLE:
MALE CONNECTOR - NEMA L1430-F1
REVISION INITIALS
PROPERTY
PENNSYLVANIA R.R.
DESIGNED BY: BWL 04-04-07
DRAWN BY: SSC 04-04-07
CHECKED BY: SJR 05-21-07
IN SERVICE: EPH 10-17-07
NORFOLK SOUTHERN
OFFICE OF ASS'T. VICE PRESIDENT COMM. & SIGNAL, ATLANTA, GA.
M.P.: CJ-216.8
SHARONVILLE, OH TO LONDON, OH
CP 216 - WEST END GEO UNITS
DAYTON DISTRICT
FILE No. R-2221
CADD or DWG. No. 82112168.10
SHEET No. 10 of 19

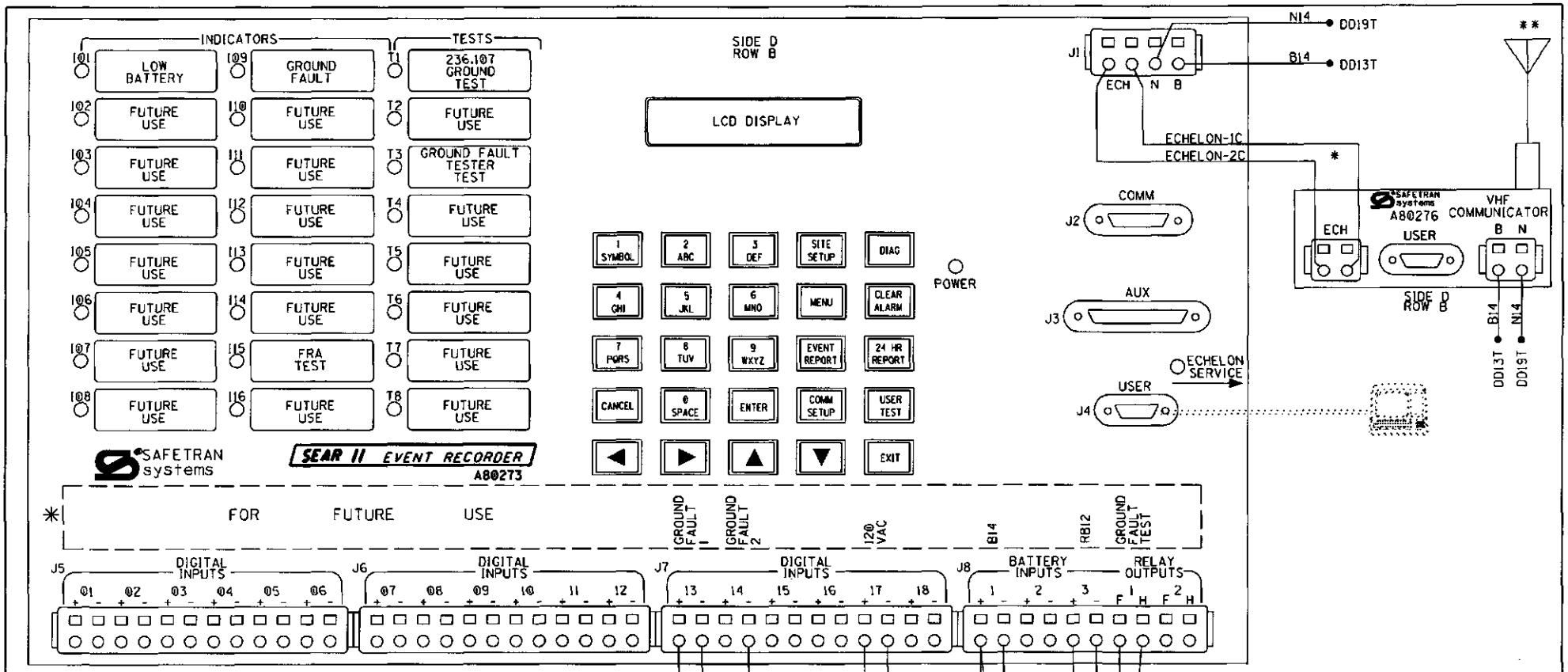

NOTES:

1. * = ECHELON CONNECTIONS NOT TO EXCEED 53' IN LENGTH AND TOTAL LENGTH NOT TO EXCEED 430' WITH A MAXIMUM OF 8 NODES. RECOMMEND USE BELDEN WIRE CABLE #8461 OR EQUIVALENT.
2. ✳ = I/O CONFIG NOT MARKED ON PANEL
3. ALL WIRING TO BE #16AWG UNLESS NOTED OTHERWISE.
4. ** = ANTENNA EXTERNALLY MOUNTED.

SEAR II EVENT RECORDER & VHF RADIO

DESIGNED BY: BWL 04-04-07	NORFOLK SOUTHERN		
DRAWN BY: SSC 04-04-07	OFFICE OF ASS'T. VICE PRESIDENT COMM. & SIGNAL, ATLANTA, GA.	M.P.: CJ-216.8	
CHECKED BY: SJR 05-21-07	SHARONVILLE, OH TO LONDON, OH CP 216 - WEST END GEO UNITS		
IN SERVICE: EPH 10-17-07	DAYTON DISTRICT	FILE No. R-2221	
	CADD or DWG. No. 82112168.11	SHEET No. 11 of 19	

REVISION INITIALS

PROPERTY PENNSYLVANIA R.R.

SITE SET UP PROCEDURE	
FUNCTION	LED DISPLAY
DATE	- -
TIME	:
DAYLIGHT SAVINGS TIME	
SITE NAME	
DOT NUMBER	N/A
MILEPOST	.
HOP ALARMS ?	NO HOP ALARMS

CPC PROTOCOL	02
ADDRESS IDENT. DIGIT	7
ADDRESS LENGTH	14
RAILROAD NUMBER	550
UNIT ADDRESS	LLLGGG
NODE NUMBER	SS
DEVICE NUMBER	01

**

CONTROL SYSTEM CONFIGURATION MENU QUESTIONS	
THE QUESTION	SELECT FROM MENU OPTION
GROUND FAULT TESTERS?	YES
FUTURE USE	FUTURE USE
"	"
"	"
"	"
"	"
"	"
"	"
"	"
"	"
"	"
"	"
"	"
"	"
"	"
"	"
"	"
"	"
"	"

VERIFY THE BATTERY SUPPLY VOLTAGES	
B14 BATTERY VOLTAGE AT SEAR II BATT INPUT 1	VOLT 1: .

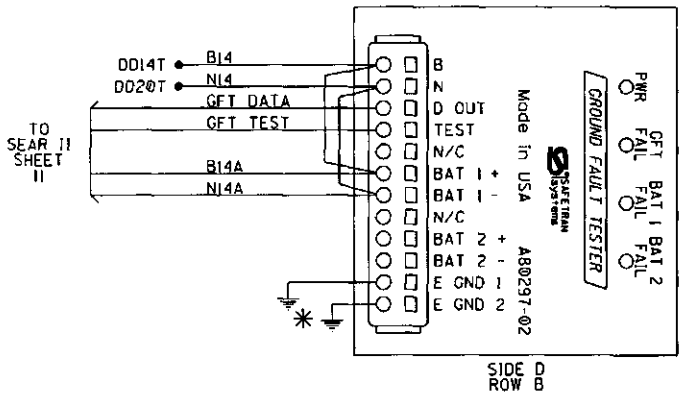

NOTES:

1. ALL WIRING TO BE #16AWG UNLESS NOTED OTHERWISE.
2. * = CONNECT "E GND 1" AND "E GND 2" TO INDEPENDENT GROUND POINTS ON SIDE A AND SIDE B.
3. ** = LLL = CODE LINE
   GGG = LOCATION NUMBER
   SS = SUBNODE NUMBER

SEAR II SET UP CHART
AND GROUND FAULT TESTER

DESIGNED BY: BWL 04-04-07	NORFOLK SOUTHERN		
DRAWN BY: SSC 04-04-07	OFFICE OF ASS'T. VICE PRESIDENT COMM. & SIGNAL, ATLANTA, GA.	M.P.: CJ-216.8	
CHECKED BY: SJR 05-21-07	SHARONVILLE, OH TO LONDON, OH CP 216 - WEST END GEO UNITS		
IN SERVICE: EPH 10-17-07	DAYTON DISTRICT	FILE No. R-2221	
	CADD or DWG. No. 82112168.12	SHEET No. 12 of 19	

REVISION INITIALS

PROPERTY
PENNSYLVANIA R.R.

LEFT TWO ROWS TERMINAL BOARD 1

"1A" "1B"

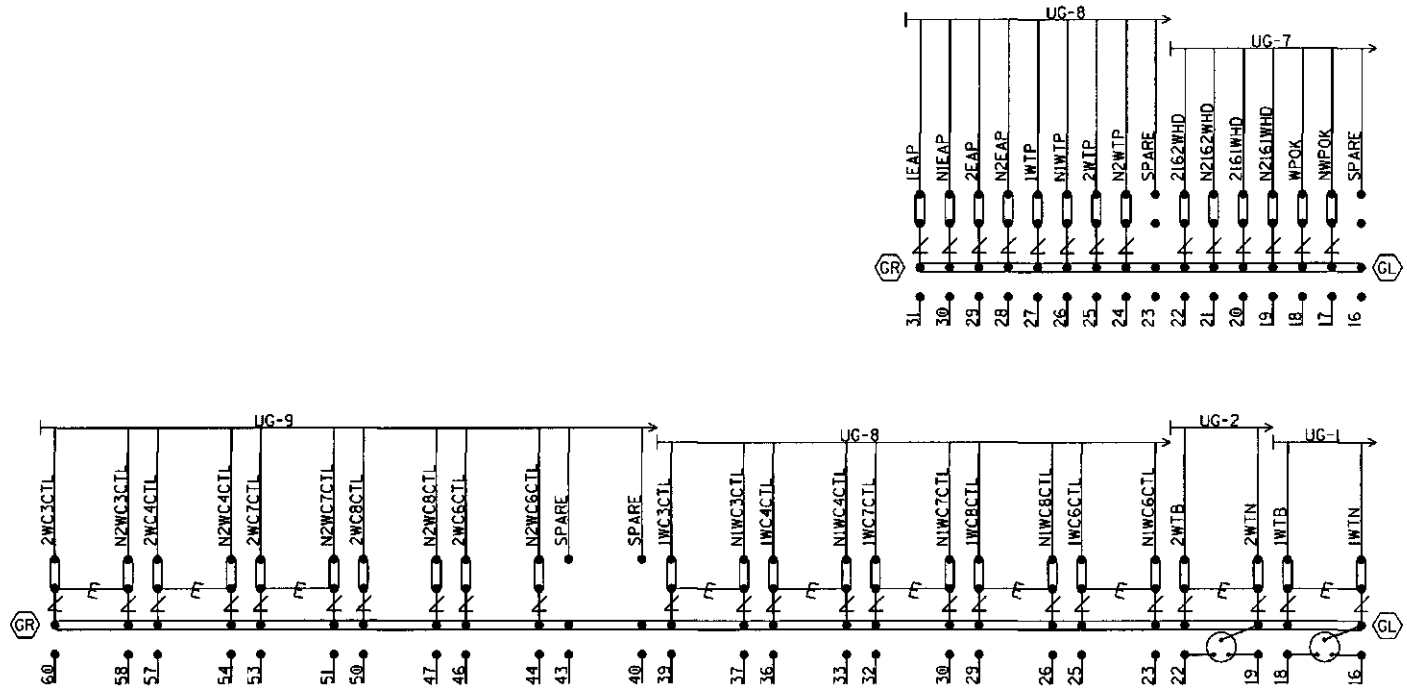

NOTE:

1. INSTALL TEST LINKS ON ALL TRACK WIRES AND ON ALL LOW VOLTAGE UNDERGROUND CABLE TERMINATIONS.

SEE FARADAY SHIELD DETAILS - 1A & 1B FOR HOW THIS PORTION OF THE FARADAY SHIELD IS PREDRILLED. ONLY INSTALL AND USE THE TERMINALS NEEDED.

= Heavy Duty Equalizer (022700-1X)

Clearview
= Lightning Arrester (022585-1X)

= LPC-10560-51

GR / GL = TERMINALS GROUNDED TO SHIELD.
4 POST BLOCKS USE EITHER -
GR - SERMMI PART NO. 61278
GL - SERMMI PART NO. 61278-1.

BACKBOARD DETAIL - 1A & 1B

DESIGNED BY: BWL 04-04-07	NORFOLK SOUTHERN		
DRAWN BY: SSC 04-04-07	OFFICE OF ASS'T. VICE PRESIDENT COMM. & SIGNAL, ATLANTA, GA.	M.P.: CJ-216.8	
CHECKED BY: SJR 05-21-07	SHARONVILLE, OH TO LONDON, OH CP 216 - WEST END GEO UNITS		
IN SERVICE: EPH 10-17-07	DAYTON DISTRICT	FILE No. R-2221	
	CADD or DWG. No. 82112168.13	SHEET No. 13 of 19	

REVISION INITIALS										

PROPERTY
PENNSYLVANIA R.R.

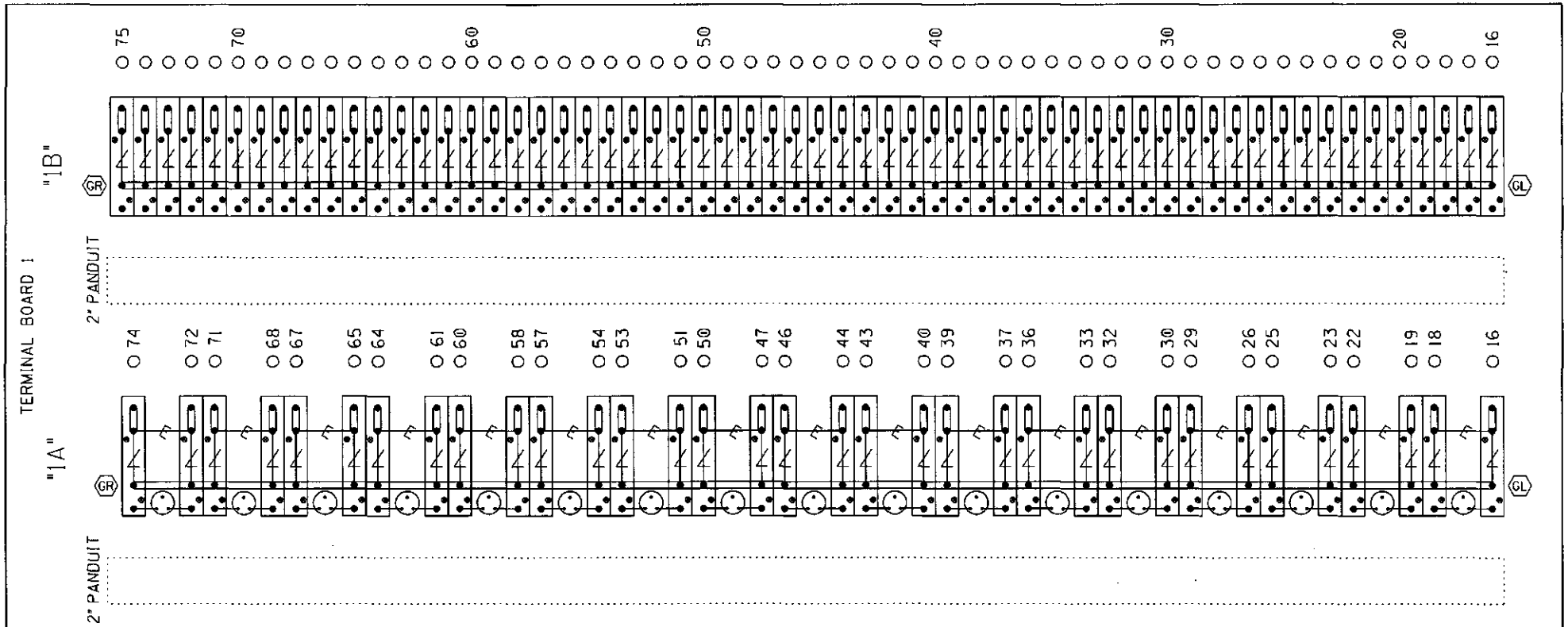

NOTE: IF THE FARADAY SHIELD WOULD EVER NEED TO BE DRILLED IN THE FIELD, PROPER PRECAUTIONS MUST BE TAKEN TO INSURE METAL SHAVINGS DO NOT GET INTO EXISTING TERMINALS/WIRES.

= Heavy Duty Equalizer (022700-1X)

Clearview = Lightning Arrester (022485-28X)

= LPC-10560-51

GR / GL = TERMINALS GROUNDED TO SHIELD. 4 POST BLOCKS USE EITHER - GR - SERMMI PART NO. 61278 GL - SERMMI PART NO. 61278-1.

= INDICATES PLACEMENT OF PANDUIT

THIS SHEET IS FOR REFERENCE ONLY. TO REFLECT HOW THE FARADAY SHIELD IS PREDRILLED. ONLY INSTALL AND USE THE TERMINALS NEEDED.

TERMINAL BOARD 1
FARADAY SHIELD DETAIL - 1A & 1B

DESIGNED BY: BWL 04-04-07	NORFOLK SOUTHERN		
DRAWN BY: SSC 04-04-07	OFFICE OF ASS'T. VICE PRESIDENT COMM. & SIGNAL, ATLANTA, GA.	M.P.: CJ-216.8	
CHECKED BY: SJR 05-21-07	SHARONVILLE, OH TO LONDON, OH CP 216 - WEST END GEO UNITS		
IN SERVICE: EPH 10-17-07	DAYTON DISTRICT	FILE No. R-2221	
	CADD or DWG. No. 82112168.14	SHEET No. 14 of 19	

REVISION INITIALS

PROPERTY
PENNSYLVANIA R.R.

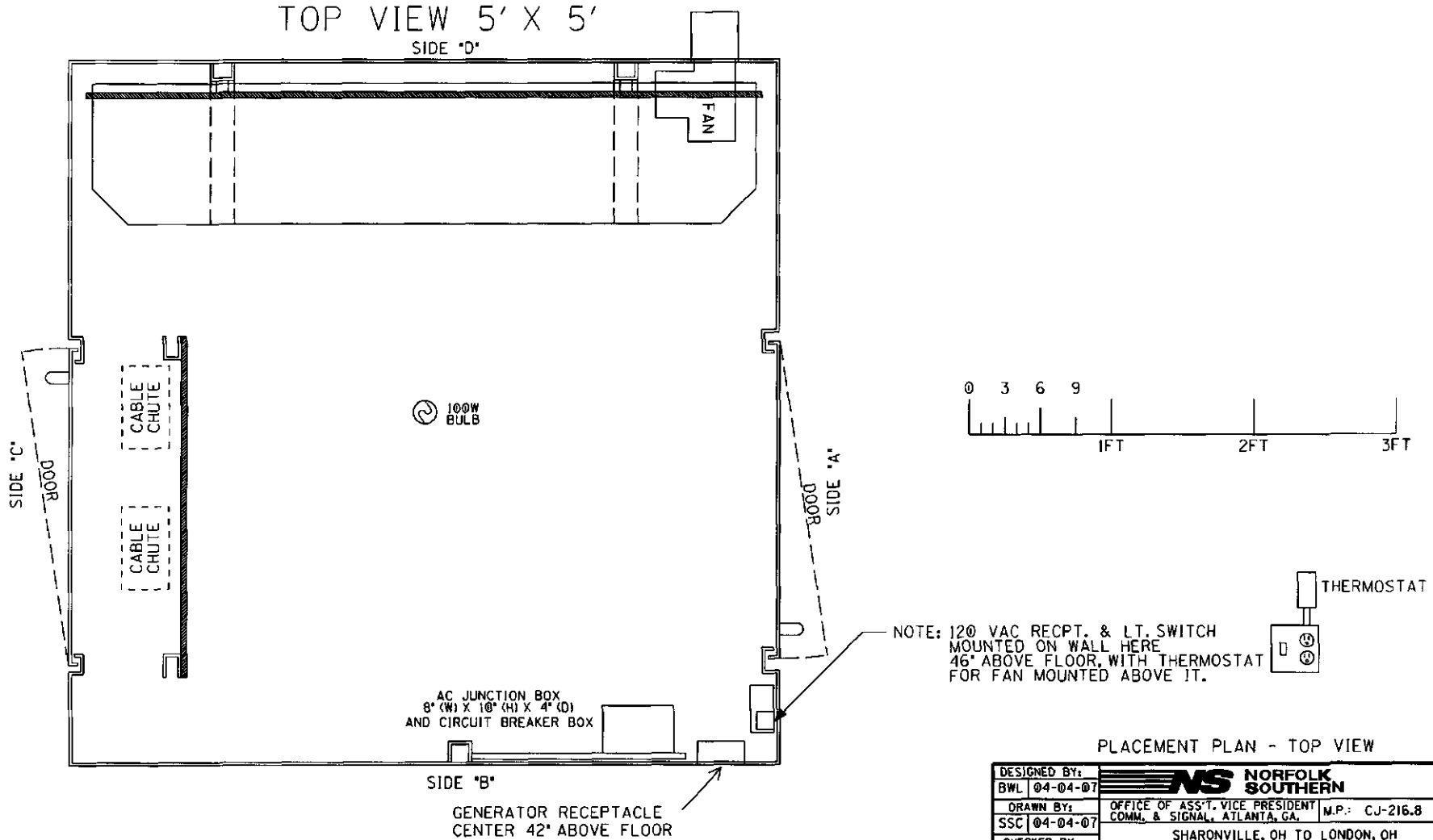

PLACEMENT PLAN - TOP VIEW

DESIGNED BY: BWL 04-04-07	NORFOLK SOUTHERN		
DRAWN BY: SSC 04-04-07	OFFICE OF ASS'T. VICE PRESIDENT COMM. & SIGNAL, ATLANTA, GA.	M.P.: CJ-216.8	
CHECKED BY: SJR 05-21-07	SHARONVILLE, OH TO LONDON, OH CP 216 - WEST END GEO UNITS		
IN SERVICE: EPH 10-17-07	DAYTON DISTRICT	FILE NO. R-2221	
	CADD or DWG. NO. 82112168.15	SHEET NO. 15 of 19	

REVISION INITIALS

PROPERTY PENNSYLVANIA R.R.

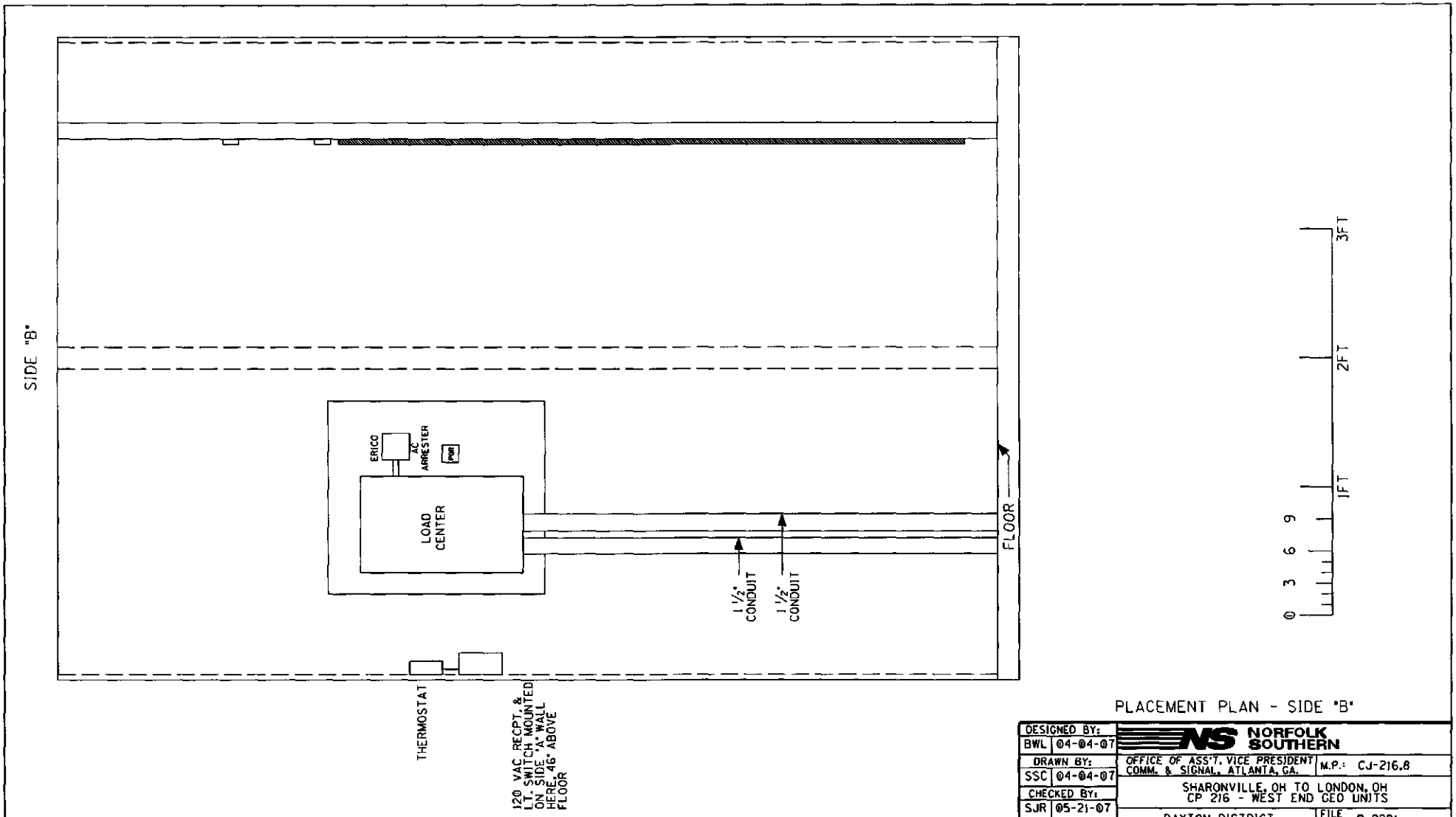

PLACEMENT PLAN - SIDE "B"

DESIGNED BY: BWL 04-04-07	NORFOLK SOUTHERN		
DRAWN BY: SSC 04-04-07	OFFICE OF ASS'T. VICE PRESIDENT COMM. & SIGNAL, ATLANTA, GA.	M.P.: CJ-216.8	
CHECKED BY: SJR 05-21-07	SHARONVILLE, OH TO LONDON, OH CP 216 - WEST END CED UNITS		
IN SERVICE: EPH 10-17-07	DAYTON DISTRICT	FILE No. R-2221	
	CADD or DWG. No. 82112166.16	SHEET No. 16 of 19	

REVISION INITIALS

PROPERTY PENNSYLVANIA R.R.

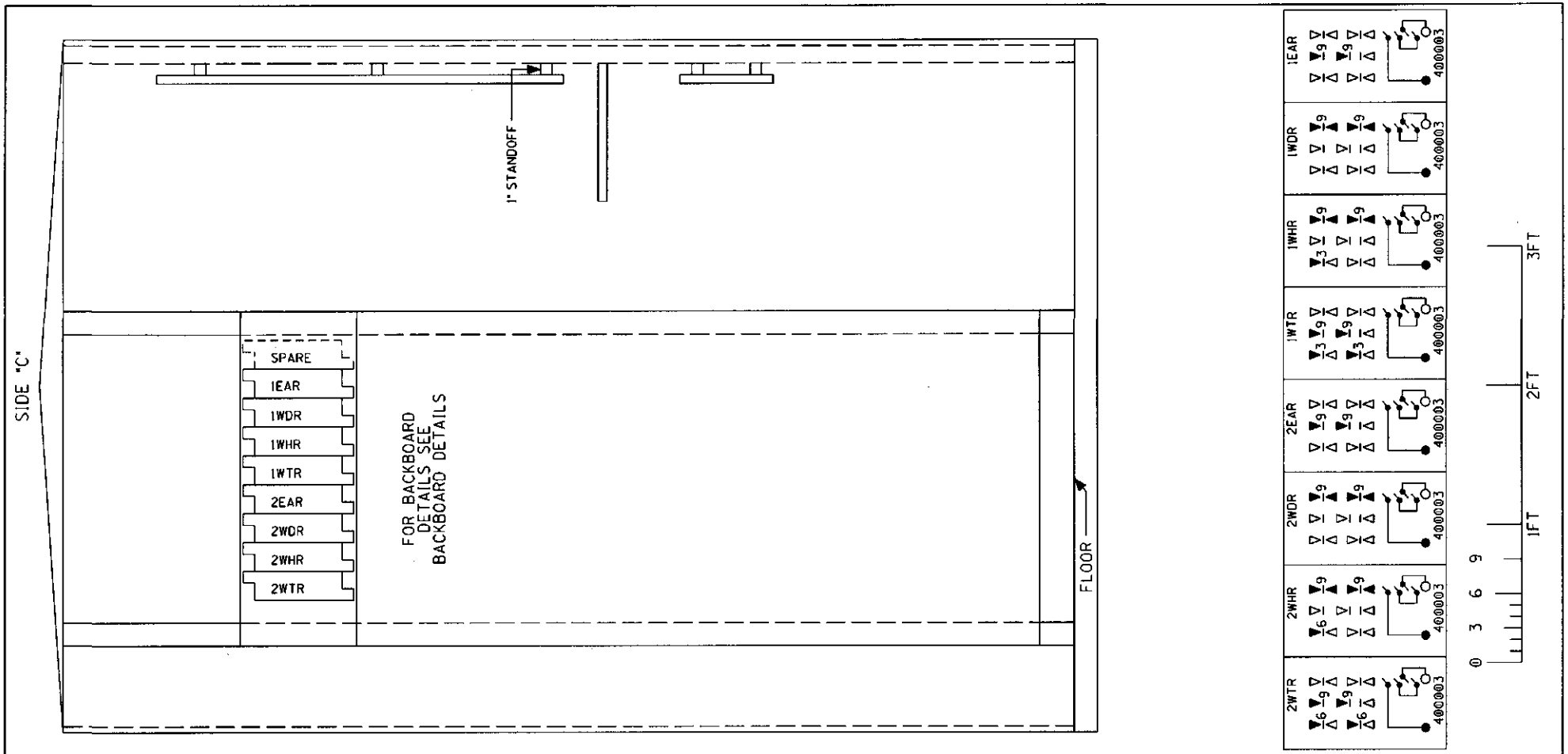

PLACEMENT PLAN - SIDE "C"

DESIGNED BY: BWL 04-04-07	NORFOLK SOUTHERN		
DRAWN BY: SSC 04-04-07	OFFICE OF ASS'T. VICE PRESIDENT COMM. & SIGNAL, ATLANTA, GA.	M.P.: CJ-216.8	
CHECKED BY: SJR 05-21-07	SHARONVILLE, OH TO LONDON, OH CP 216 - WEST END GEO UNITS		
IN SERVICE: EPH 10-17-07	DAYTON DISTRICT	FILE No. R-2221	
	CADD or DWG. No. 82112168.17	SHEET No. 17 of 19	

REVISION INITIALS										

PROPERTY
PENNSYLVANIA R.R.

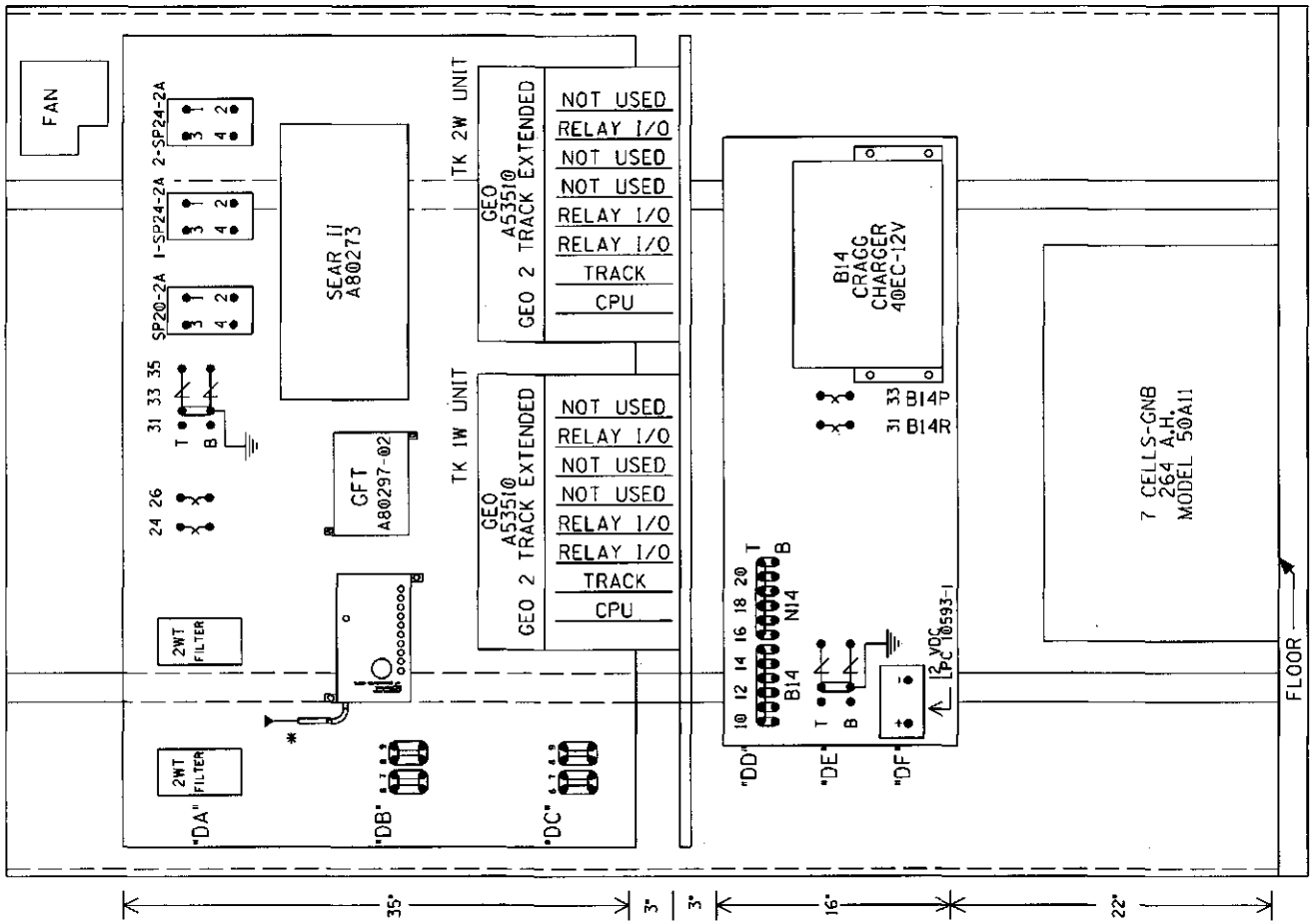

PLACEMENT PLAN - SIDE "D"

NOTE:

1. * = ANTENNA EXTERNALLY MOUNTED.

REVISION INITIALS	PROPERTY PENNSYLVANIA R.R.	DESIGNED BY: BWL 04-04-07	NORFOLK SOUTHERN
		DRAWN BY: SSC 04-04-07	OFFICE OF ASS'T. VICE PRESIDENT COMM. & SIGNAL, ATLANTA, GA. — M.P.: CJ-216.8
		CHECKED BY: SJR 05-21-07	SHARONVILLE, OH TO LONDON, OH CP 216 - WEST END GEO UNITS
		IN SERVICE: EPH 10-17-07	DAYTON DISTRICT — FILE No. R-2221
			CADD or DWG. No. 82112168.18 — SHEET No. 18 of 19

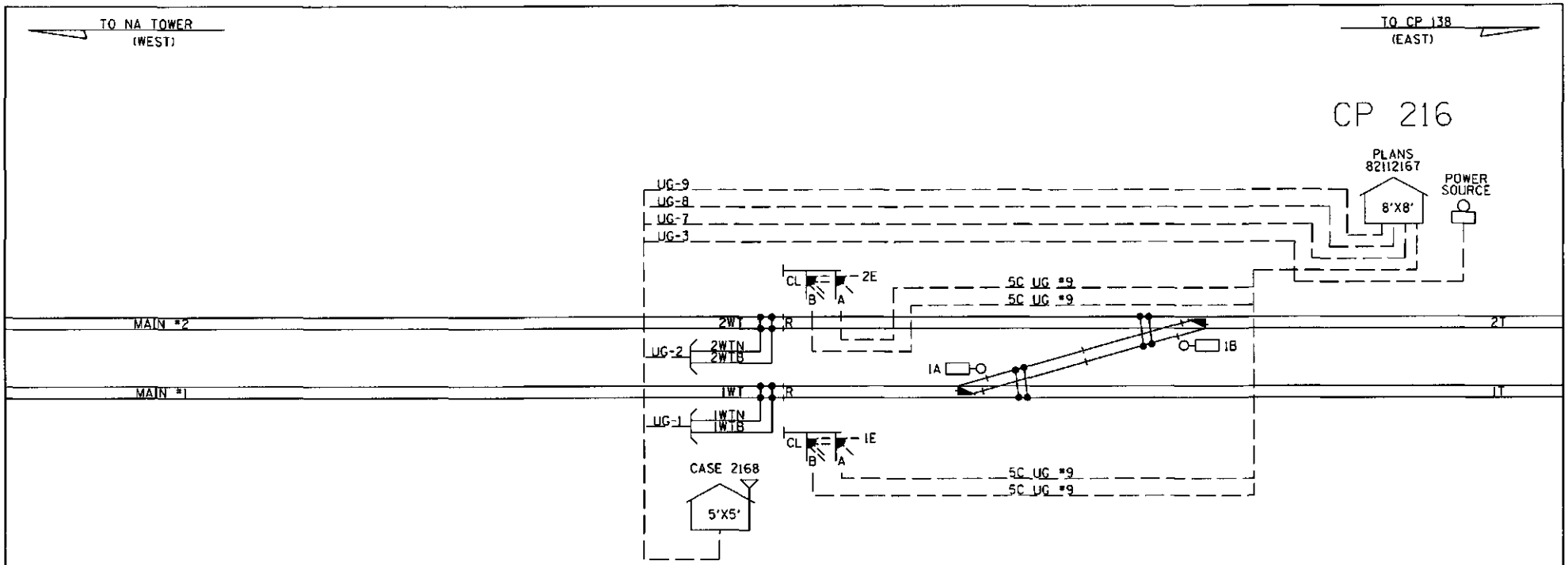

UG-1 - 2C UG #6 TW.TK.
UG-2 - 2C UG #6 TW.TK.
UG-3 - 3C UG #6 W/#8 GND
UG-7 - 7C UG #14
UG-8 - 19C UG #14
UG-9 - 12C UG #14

#10.1376
JLM/XRL
06-28-12
RED = IN
YELLOW = OUT
CHECKED BY PEH
07- -12

CABLE PLAN

DESIGNED BY: BWL 04-04-07	NORFOLK SOUTHERN		
DRAWN BY: SSC 04-04-07	OFFICE OF ASS'T. VICE PRESIDENT COMM. & SIGNAL, ATLANTA, GA.	M.P.: CJ-216.8	
CHECKED BY: SJR 05-21-07	SHARONVILLE, OH TO LONDON, OH CP 216 - WEST END GEO UNITS		
IN SERVICE: EPH 10-17-07	DAYTON DISTRICT	FILE No. R-2221	
	CADD or DWG. No. 82112168.19	SHEET No. 19 of 19	

REVISION INITIALS

PROPERTY
PENNSYLVANIA R.R.

SH. NO.	CONTENTS
NX1	INDEX SHEET
1	OUTSIDE PLAN
2	GEO REPEATER TRACK 1
3	2 TRACK EXTENDED UNIT - TRACK 1
4	TRACK 1 GEO USER OPTIONS AND OPERATING PARAMETERS
5	GEO REPEATER TRACK 2
6	2 TRACK EXTENDED UNIT - TRACK 2
7	TRACK 2 GEO USER OPTIONS & OPERATING PARAMETERS
8	LOAD CENTER, B12 RECTIFIER & BATTERY
9	BACKBOARD DETAIL - 1A & 1B
10	FARADAY SHIELD DETAIL - 1A & 1B
11	PLACEMENT PLAN - TOP VIEW
12	RACK PLACEMENT
13	PLACEMENT PLAN - SIDE "B"
14	PLACEMENT PLAN - SIDE "C"
15	PLACEMENT PLAN - SIDE "D"
16	CABLE PLAN

NEW SHEET
#10.1376
JLM/XRL
06-28-12
RED = IN
YELLOW = OUT
CHECKED BY PEH
07-27-12

IN SERVICE_____ _____
SIGNED DATE

☐ S&E ENGINEERING COPY
☐ CONSTRUCTION OFFICE COPY
RETURN TO S&E ENG. AFTER COMPLETION
☐ FIELD COPY
RETURN TO CASE AFTER COMPLETION
☐ PROJECT ENGINEER COPY

INDEX SHEET

DESIGNED BY: JLM 06-28-12	NORFOLK SOUTHERN	
DRAWN BY: XRL 06-28-12	OFFICE OF ASS'T. VICE PRESIDENT COMM. & SIGNAL, ATLANTA, GA.	M.P.: CJ-217.41
CHECKED BY: PEH 07-27-12	SHARONVILLE, OH TO LONDON, OH GEO REPEATER	
IN SERVICE: - -	DAYTON DISTRICT	FILE No. R-
	CADD or DWG. No. 82112175.NX1	SHEET No. 1 of 1

REVISION INITIALS

PROPERTY
PENNSYLVANIA R.R.

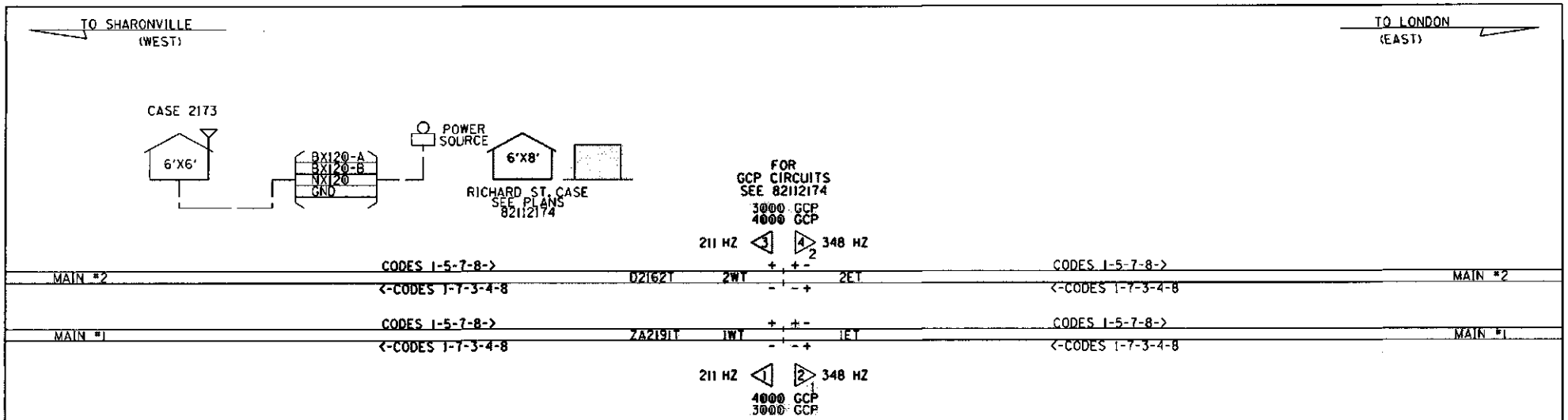

OUTSIDE PLAN

#10.1376
JLM/XRL
06-28-12
RED = IN
YELLOW = OUT
CHECKED BY PEH
07-27-12

DESIGNED BY: DAD 03-28-07	NORFOLK SOUTHERN		
DRAWN BY: DAD 03-28-07	OFFICE OF ASS'T. VICE PRESIDENT COMM. & SIGNAL, ATLANTA, GA.	M.P.: CJ-217.41	
CHECKED BY: SJR 05-21-07	SHARONVILLE, OH TO LONDON, OH GEO REPEATER & GCP3000		
IN SERVICE: AFS 10-17-07	DAYTON DISTRICT	FILE No. R-2221	
	CADD or DWG. No. 82112175.01	SHEET No. 1 of 16 20	

REVISION INITIALS

PROPERTY
PENNSYLVANIA R.R.

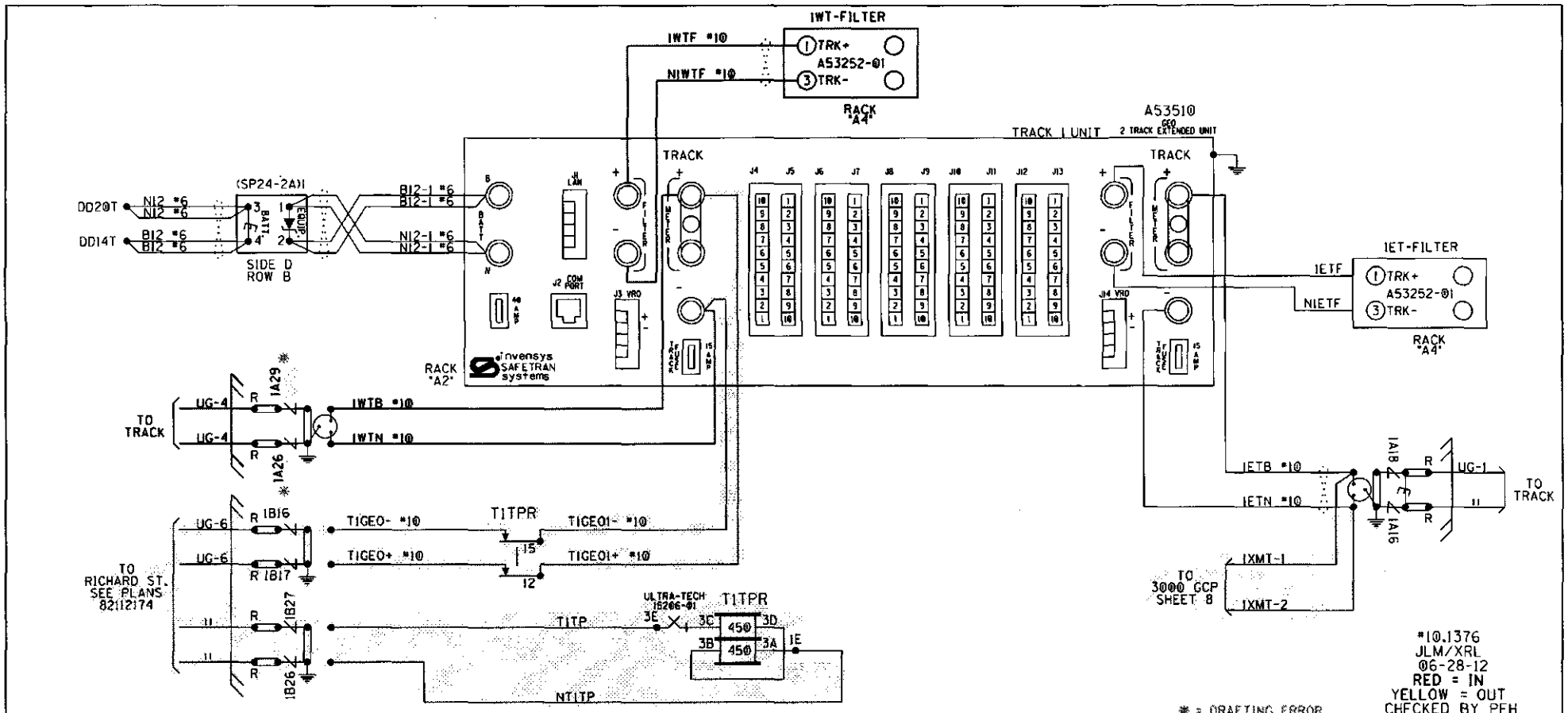

NOTES:

1. ALL WIRING TO BE #16AWG UNLESS NOTED OTHERWISE.
2. [#] = POSITION IN WAGO CONN.
3. = TWIST BATTERY LEADS

GEO REPEATER TRACK 1

DESIGNED BY: DAD 03-28-07	NORFOLK SOUTHERN		
DRAWN BY: DAD 03-28-07	OFFICE OF ASS'T. VICE PRESIDENT COMM. & SIGNAL, ATLANTA, GA.	M.P.: CJ-217.41	
CHECKED BY: SJR 05-21-07	SHARONVILLE, OH TO LONDON, OH GEO REPEATER & GCP3000		
IN SERVICE: AFS 10-17-07	DAYTON DISTRICT	FILE No. R-2221	
	CADD or DWG. No. 82112175.02	SHEET No. 2 of 16 20	

REVISION INITIALS

PROPERTY PENNSYLVANIA R.R.

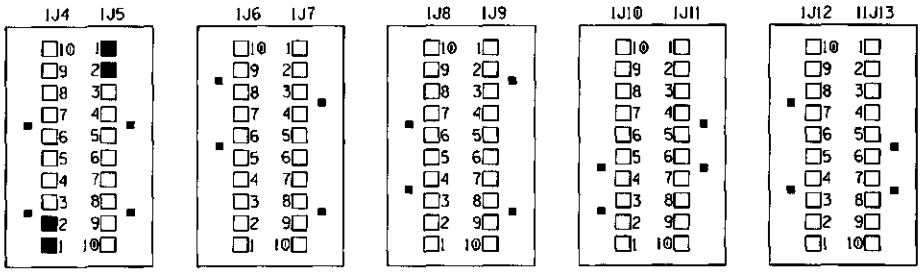

KEYING FINGERS: ■ = CUT

WAGO CONNECTION: ■ = USED

□ = NOT USED

MCF NAME: EGEORRCQ002

UCN: 75699138 B0B90F46

SIN: 700000000000

CRC: 8670DB64

MODULE SOFTWARE VERSIONS

A80414 CPU:	01	18	.MEF CRC:	564C
A53285 TRACK:	01	13	.MEF CRC:	48FD
A80413 RELAY I/O:	01	06	.MEF CRC:	3433
A53285 TRACK:	01	13	.MEF CRC:	48FD
A53254 LINE:	00	13	.MEF CRC:	B265

GEO™
2 TRACK EXTENDED UNIT A53510

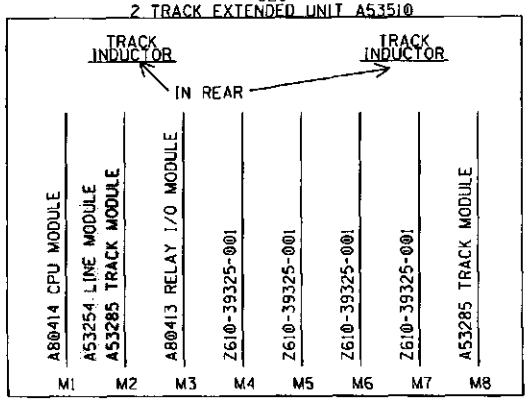

GEO A53510 CONNECTOR PINOUTS

PIN	IJ4		IJ6		IJ8		IJ10		IJ12	
10	VR01 +	IWWL								
9	VR01 -	NIWWL								
8	VR02 +	IEWL								
7	VR02 -	NIEWL								
6	VR03 +									
5	VR03 -									
4	VR04 +									
3	VR04 -									
2	VPI1 +	IWAUX								
1	VPI1 -	NIWAUX								
PIN	IJ5		IJ7		IJ9		IJ11		IJ13	
1	VPI2 +	IEAUX								
2	VPI2 -	NIEAUX								
3	VPI3 +									
4	VPI3 -									
5	VPI4 +									
6	VPI4 -									
7	N/A +									
8	N/A -									
9	N/A +									
10	N/A -									

TRACK 1
2 TRACK EXTENDED UNIT
GEO MODULES AND I/O PINOUTS

#10.1376
JLM/XRL
06-28-12
RED = IN
YELLOW = OUT
CHECKED BY PEH
07-27-12

DESIGNED BY:	DAD 03-28-07
DRAWN BY:	DAD 03-28-07
CHECKED BY:	SJR 05-21-07
IN SERVICE:	AFS 10-17-07

NORFOLK SOUTHERN

OFFICE OF ASS'T. VICE PRESIDENT COMM. & SIGNAL, ATLANTA, GA.

M.P.: CJ-217.41

SHARONVILLE, OH TO LONDON, OH
GEO REPEATER & GCP3000

DAYTON DISTRICT

FILE No. R-2221

CADD or DWG. No. 82112175.03

SHEET No. 3 of 16 20

REVISION INITIALS

PROPERTY
PENNSYLVANIA R.R.

CODED LINE TRACK OPERATING PARAMETERS

SLOT 2 (M2)		
PROPERTY	VALUE	UNITS
TRANSMIT	*	mV
RECEIVE	TRUE	
TRANSMIT	TRUE	
CODE 5	ALTERNATING	
EC4 COMPATIBILITY	EC4 PLUS	
NON-VITAL CHANGE	2	CYCLES
VITAL CHANGE	2	CYCLES
SHUNT DROP	2	CYCLES
SHUNT PICK	5	CYCLES
RECEIVE	*	mA

RIO OPERATING PARAMETERS

SLOT 3 (M3)		
PROPERTY	VALUE	UNITS
VPI DEBOUNCE	20	mS

SETUP VITAL OPTIONS

VITAL USER OPTIONS		
USER OPTION	VALUE	UNITS
WAUXNWPOPT	ENABLED	N/A
EAUXNWPOPT	ENABLED	N/A
WTAUXC6	ENABLED	N/A
ETAUXC6	ENABLED	N/A
VITAL USER TIMERS		
WAUXWFD	20	SEC
EAUXWFD	20	SEC

NON-VITAL USER OPTIONS				
OPTIONS	WEST TRACK (SLOT 2)		EAST TRACK (SLOT 8)	
CODE 5	WTC5 OFF	X	ETC5 OFF	X
	WTC5 ON		ETC5 ON	
AUX BLOCK	WAUXBK OFF	X	EAUXBK OFF	X
	WAUXBK OFF ADJ		EAUXBK OFF ADJ	
	WAUXBK OFF AUX		EAUXBK OFF AUX	
	WAUXBK ON		EAUXBK ON	

CODED TRACK OPERATING PARAMETERS

SLOT 8 (M8)		
PROPERTY	VALUE	UNITS
VCO VOLTAGE	*	mV
RECEIVE	TRUE	
TRANSMIT	TRUE	
CODE 5	ALTERNATING	
EC4 COMPATIBILITY	EC4 PLUS	
NON-VITAL CHANGE	2	CYCLES
VITAL CHANGE	2	CYCLES
SHUNT DROP	2	CYCLES
SHUNT PICK	5	CYCLES
CURRENT LIMIT	*	mA

CODE 5 COMMENTS

WTC5 OFF = CODE 5 REPEAT ON WEST TRACK WHEN C5 RECEIVED ON EAST TRACK.

WTC5 ON = CODE 5 GENERATED OUT WEST TRACK WHEN C1 RECEIVED ON EAST TRACK.

ETC5 OFF = CODE 5 REPEAT ON EAST TRACK WHEN C5 RECEIVED ON WEST TRACK.

ETC5 ON = CODE 5 GENERATED OUT EAST TRACK WHEN C1 RECEIVED ON WEST TRACK.

GENERAL

WAUXNWPOPT = WEST NWP OPTION (ENABLED MEANS THE UNIT MUST SEE BATTERY ON WEST NWP INPUT) ENABLED IS THE DEFAULT.

EAUXNWPOPT = EAST NWP OPTION (ENABLED MEANS THE UNIT MUST SEE BATTERY ON EAST NWP INPUT) ENABLED IS THE DEFAULT.

WTAUXC6 = WHEN ENABLED, CODES 1 & 6 WILL BE TRANSMITTED ON WEST TRACK IF EITHER AUX INPUT IS OPEN. OTHERWISE NO CODE WILL BE TRANSMITTED.

ETAUXC6 = WHEN ENABLED, CODES 1 & 6 WILL BE TRANSMITTED ON EAST TRACK IF EITHER AUX INPUT IS OPEN. OTHERWISE NO CODE WILL BE TRANSMITTED.

WAUXWFD = FALL DOWN TIMER (REMOVAL OF WEST NWP FOR 20 SECONDS WILL OUTPUT 1WWL IF CONDITIONS PERMIT).

EAUXWFD = FALL DOWN TIMER (REMOVAL OF EAST NWP FOR 20 SECONDS WILL OUTPUT 1EWL IF CONDITIONS PERMIT).

WAUXBK = IF SET TO "OFF" AND WEST AUX INPUT OPENS THE UNIT WILL NOT SEND ANY C5 OUT EITHER DIRECTION.

EAUXBK = IF SET TO "OFF" AND EAST AUX INPUT OPENS THE UNIT WILL NOT SEND ANY C5 OUT EITHER DIRECTION.

*10.1376
JLM/XRL
06-28-12
RED = IN
YELLOW = OUT
CHECKED BY PEH
07-27-12

NOTE:

1. * = VALUE TO BE FILLED IN BY FIELD FORCES.

TRACK 1
GEO USER OPTIONS AND
OPERATING PARAMETERS

DESIGNED BY: DAD 03-28-07	NORFOLK SOUTHERN	
DRAWN BY: DAD 03-28-07	OFFICE OF ASS'T. VICE PRESIDENT COMM. & SIGNAL, ATLANTA, GA.	M.P.: CJ-217.41
CHECKED BY: SJR 05-21-07	SHARONVILLE, OH TO LONDON, OH GEO REPEATER & GCP3000	
IN SERVICE: AFS 10-17-07	DAYTON DISTRICT	FILE No. R-2221
	CADD or DWG. No. 82112175.04	SHEET No. 4 of 16 20

REVISION INITIALS

PROPERTY
PENNSYLVANIA R.R.

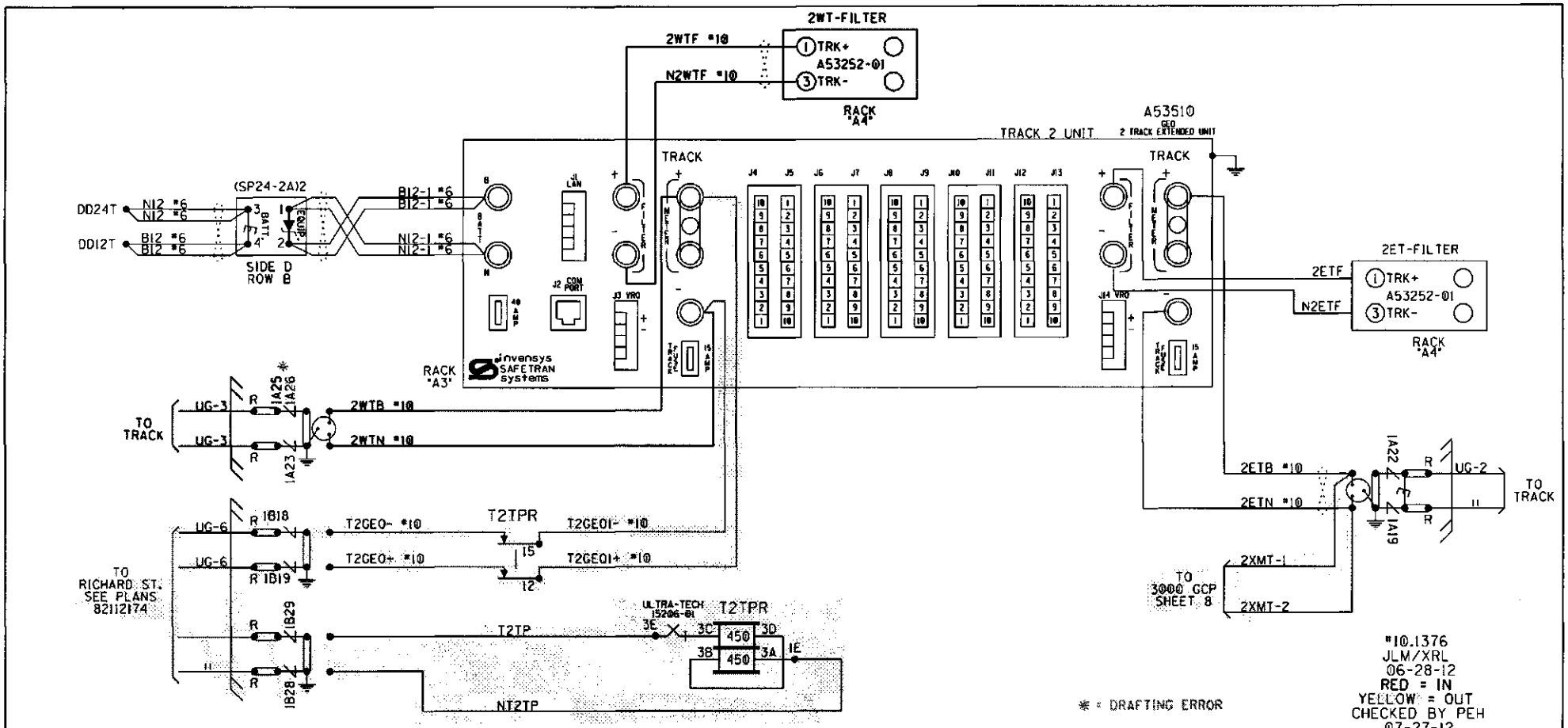
2WT-FILTER
2WTF #10
N2WTF #10
TRK+
A53252-01
TRK-
RACK "A4"
A53510
GEO 2 TRACK EXTENDED UNIT
TRACK 2 UNIT
TRACK
(SP24-2A)2
DD24T
DD12T
N12 #6
B12 #6
B12-1 #6
N12-1 #6
SIDE D
ROW B
RACK "A3"
invensys SAFETRAN systems
2ET-FILTER
2ETF
N2ETF
TO TRACK
UG-3
2WTB #10
2WTN #10
UG-6
T2GEO- #10
T2GEO+ #10
T2TPR
T2GEO1- #10
T2GEO1+ #10
TO RICHARD ST. SEE PLANS 82112174
T2TP
NT2TP
ULTRA-TECH 15206-01
450
2ETB #10
2ETN #10
UG-2
2XMT-1
2XMT-2
TO 3000 GCP SHEET 8
GEO WAGO CONN.
DD16T
B12
2WAUX
DD24B
N12
N2WAUX
2EAUX
N2EAUX
NOTES:
1. ALL WIRING TO BE #16AWG UNLESS NOTED OTHERWISE.
2. # = POSITION IN WAGO CONN.
3. = TWIST BATTERY LEADS
* = DRAFTING ERROR
#10.1376
JLM/XRL
06-28-12
RED = IN
YELLOW = OUT
CHECKED BY PEH
07-27-12
GEO REPEATER TRACK 2
DESIGNED BY: DAD 03-28-07
DRAWN BY: DAD 03-28-07
CHECKED BY: SJR 05-21-07
IN SERVICE: AFS 10-17-07
NORFOLK SOUTHERN
OFFICE OF ASS'T. VICE PRESIDENT COMM. & SIGNAL, ATLANTA, GA.
M.P.: CJ-217.41
SHARONVILLE, OH TO LONDON, OH
GEO REPEATER & GCP3000
DAYTON DISTRICT
FILE No. R-2221
CADD or DWG. No. 82112175.05
SHEET No. 5 of 16 20
REVISION INITIALS
PROPERTY
PENNSYLVANIA R.R.

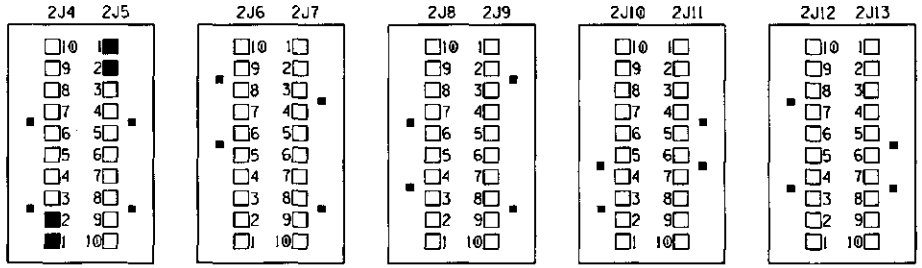

KEYING FINGERS: ■ = CUT

WAGO CONNECTION: ■ = USED

□ = NOT USED

MCF NAME: EGEORRCQ002

UCN: 75699138 B0B90F46

SIN: 700000000000

CRC: 8670DB64

MODULE SOFTWARE VERSIONS

A80414 CPU:	01_18	.MEF CRC:	564C
A53285 TRACK:	01_13	.MEF CRC:	48FD
A80413 RELAY I/O:	01_06	.MEF CRC:	3433
A53285 TRACK:	01_13	.MEF CRC:	48FD
A53254 LINE:	00_13	.MEF CRC:	B265

GEO™
2 TRACK EXTENDED UNIT A53510

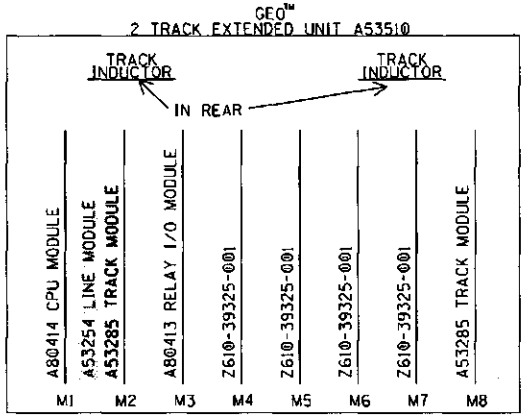

GEO A53510 CONNECTOR PINOUTS

PIN	2J4		2J6		2J8		2J10		2J12	
10	VR01 +	2WWL								
9	VR01 -	N2WWL								
8	VR02 +	2EWL								
7	VR02 -	N2EWL								
6	VR03 +									
5	VR03 -									
4	VR04 +									
3	VR04 -									
2	VP11 +	2WAUX								
1	VP11 -	N2WAUX								
PIN	2J5		2J7		2J9		2J11		2J13	
1	VP12 +	2EAUX								
2	VP12 -	N2EAUX								
3	VP13 +									
4	VP13 -									
5	VP14 +									
6	VP14 -									
7	N/A +									
8	N/A -									
9	N/A +									
10	N/A -									

TRACK 2
2 TRACK EXTENDED UNIT
GEO MODULES AND I/O PINOUTS

*10.1376
JLM/XRL
06-28-12
RED = IN
YELLOW = OUT
CHECKED BY PEH
07-27-12

DESIGNED BY:	DAD 03-28-07
DRAWN BY:	DAD 03-28-07
CHECKED BY:	SJR 05-21-07
IN SERVICE:	AFS 10-17-07

NORFOLK SOUTHERN

OFFICE OF ASS'T. VICE PRESIDENT COMM. & SIGNAL, ATLANTA, GA.

M.P.: CJ-217.41

SHARONVILLE, OH TO LONDON, OH
GEO REPEATER & GCP3000

DAYTON DISTRICT

FILE No. R-2221

CADD or DWG. No. 82112175.06

SHEET No. 6 of 16 20

REVISION INITIALS

PROPERTY
PENNSYLVANIA R.R.

CODED LINE TRACK OPERATING PARAMETERS

SLOT 2 (M2)		
PROPERTY	VALUE	UNITS
TRANSMIT	*	mV
RECEIVE	TRUE	
TRANSMIT	TRUE	
CODE 5	ALTERNATING	
EC4 COMPATIBILITY	EC4 PLUS	
NON-VITAL CHANGE	2	CYCLES
VITAL CHANGE	2	CYCLES
SHUNT DROP	2	CYCLES
SHUNT PICK	5	CYCLES
RECEIVE	*	mA

RIO OPERATING PARAMETERS

SLOT 3 (M3)		
PROPERTY	VALUE	UNITS
VPI DEBOUNCE	20	mS

SETUP VITAL OPTIONS

VITAL USER OPTIONS		
USER OPTION	VALUE	UNITS
WAUXNWPOPT	ENABLED	N/A
EAUXNWPOPT	ENABLED	N/A
WTAUXC6	ENABLED	N/A
ETAUXC6	ENABLED	N/A
VITAL USER TIMERS		
WAUXWFD	20	SEC
EAUXWFD	20	SEC

NON-VITAL USER OPTIONS				
OPTIONS	WEST TRACK (SLOT 2)		EAST TRACK (SLOT 8)	
CODE 5	WTC5 OFF	X	ETC5 OFF	X
	WTC5 ON		ETC5 ON	
AUX BLOCK	WAUXBK OFF	X	EAUXBK OFF	X
	WAUXBK OFF ADJ		EAUXBK OFF ADJ	
	WAUXBK OFF AUX		EAUXBK OFF AUX	
	WAUXBK ON		EAUXBK ON	

CODE 5 COMMENTS

WTC5 OFF = CODE 5 REPEAT ON WEST TRACK WHEN C5 RECEIVED ON EAST TRACK.

WTC5 ON = CODE 5 GENERATED OUT WEST TRACK WHEN C1 RECEIVED ON EAST TRACK.

ETC5 OFF = CODE 5 REPEAT ON EAST TRACK WHEN C5 RECEIVED ON WEST TRACK.

ETC5 ON = CODE 5 GENERATED OUT EAST TRACK WHEN C1 RECEIVED ON WEST TRACK.

CODED TRACK OPERATING PARAMETERS

SLOT 8 (M8)		
PROPERTY	VALUE	UNITS
VCO VOLTAGE	*	mV
RECEIVE	TRUE	
TRANSMIT	TRUE	
CODE 5	ALTERNATING	
EC4 COMPATIBILITY	EC4 PLUS	
NON-VITAL CHANGE	2	CYCLES
VITAL CHANGE	2	CYCLES
SHUNT DROP	2	CYCLES
SHUNT PICK	5	CYCLES
CURRENT LIMIT	*	mA

GENERAL

WAUXNWPOPT = WEST NWP OPTION (ENABLED MEANS THE UNIT MUST SEE BATTERY ON WEST NWP INPUT) ENABLED IS THE DEFAULT.

EAUXNWPOPT = EAST NWP OPTION (ENABLED MEANS THE UNIT MUST SEE BATTERY ON EAST NWP INPUT) ENABLED IS THE DEFAULT.

WTAUXC6 = WHEN ENABLED, CODES 1 & 6 WILL BE TRANSMITTED ON WEST TRACK IF EITHER AUX INPUT IS OPEN. OTHERWISE NO CODE WILL BE TRANSMITTED.

ETAUXC6 = WHEN ENABLED, CODES 1 & 6 WILL BE TRANSMITTED ON EAST TRACK IF EITHER AUX INPUT IS OPEN. OTHERWISE NO CODE WILL BE TRANSMITTED.

WAUXWFD = FALL DOWN TIMER (REMOVAL OF WEST NWP FOR 20 SECONDS WILL OUTPUT 1WWL IF CONDITIONS PERMIT).

EAUXWFD = FALL DOWN TIMER (REMOVAL OF EAST NWP FOR 20 SECONDS WILL OUTPUT 1EWL IF CONDITIONS PERMIT).

WAUXBK = IF SET TO "OFF" AND WEST AUX INPUT OPENS THE UNIT WILL NOT SEND ANY C5 OUT EITHER DIRECTION.

EAUXBK = IF SET TO "OFF" AND EAST AUX INPUT OPENS THE UNIT WILL NOT SEND ANY C5 OUT EITHER DIRECTION.

*10.1376
JLM/XRL
06-28-12
RED = IN
YELLOW = OUT
CHECKED BY PEH
07-27-12

NOTE:

1. * = VALUE TO BE FILLED IN BY FIELD FORCES.

TRACK 2
GEO USER OPTIONS AND
OPERATING PARAMETERS

DESIGNED BY: DAD 03-28-07	NORFOLK SOUTHERN	
DRAWN BY: DAD 03-28-07	OFFICE OF ASS'T. VICE PRESIDENT COMM. & SIGNAL, ATLANTA, GA.	M.P.: CJ-217.41
CHECKED BY: SJR 05-21-07	SHARONVILLE, OH TO LONDON, OH GEO REPEATER & GCP3000	
IN SERVICE: AFS 10-17-07	DAYTON DISTRICT	FILE No. R-2221
	CADD or DWG. No. 82112175.07	SHEET No. 7 of 16 20

REVISION INITIALS

PROPERTY
PENNSYLVANIA R.R.

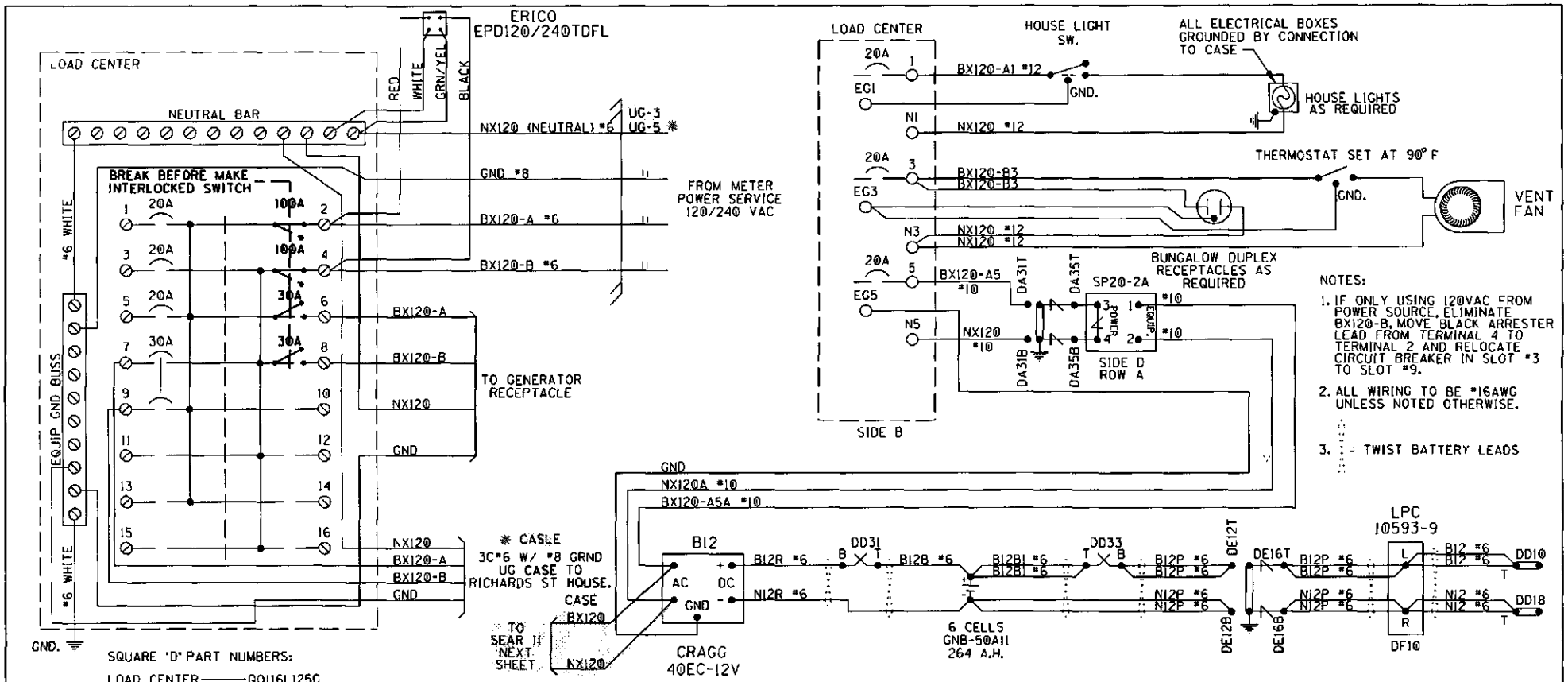

SQUARE 'D' PART NUMBERS:

LOAD CENTER ——— QO116L125G
10A 1P CIR BKR —— QO110
20A 1P CIR BKR —— QO120
30A 1P CIR BKR —— QO130
30A 2P CIR BKR —— QO230
60A 2P CIR BKR —— QO260
100A 2P CIR BKR —— QO2100
MECH INTERLOCK —— PK4DTIM4LA

GENERATOR RECEPTACLE:
MALE CONNECTOR - NEMA L1430-FI

NOTE: ALL AC WIRING IS TO BE IN METALLIC CONDUIT WITH NO EXPOSED TERMINALS. ALL AC 120V AND 240V EQUIPMENT IS TO BE PROPERLY GROUNDED.

* = DRAFTING ERROR

*10.1376
JLM/XRL
06-28-12
RED = IN
YELLOW = OUT
CHECKED BY PEH
07-27-12

LOAD CENTER,
B12 RECTIFIER AND BATTERY

DESIGNED BY: DAD 03-28-07	NORFOLK SOUTHERN	
DRAWN BY: DAD 03-28-07	OFFICE OF ASS'T. VICE PRESIDENT COMM. & SIGNAL, ATLANTA, GA.	M.P.: CJ-217.41
CHECKED BY: SJR 05-21-07	SHARONVILLE, OH TO LONDON, OH GEO REPEATER & GCP3000	
IN SERVICE: AFS 10-17-07	DAYTON DISTRICT	FILE No. R-2221
	CADD or DWG. No. 82112175.08	SHEET No. 8 of 16 20

REVISION INITIALS

PROPERTY
PENNSYLVANIA R.R.

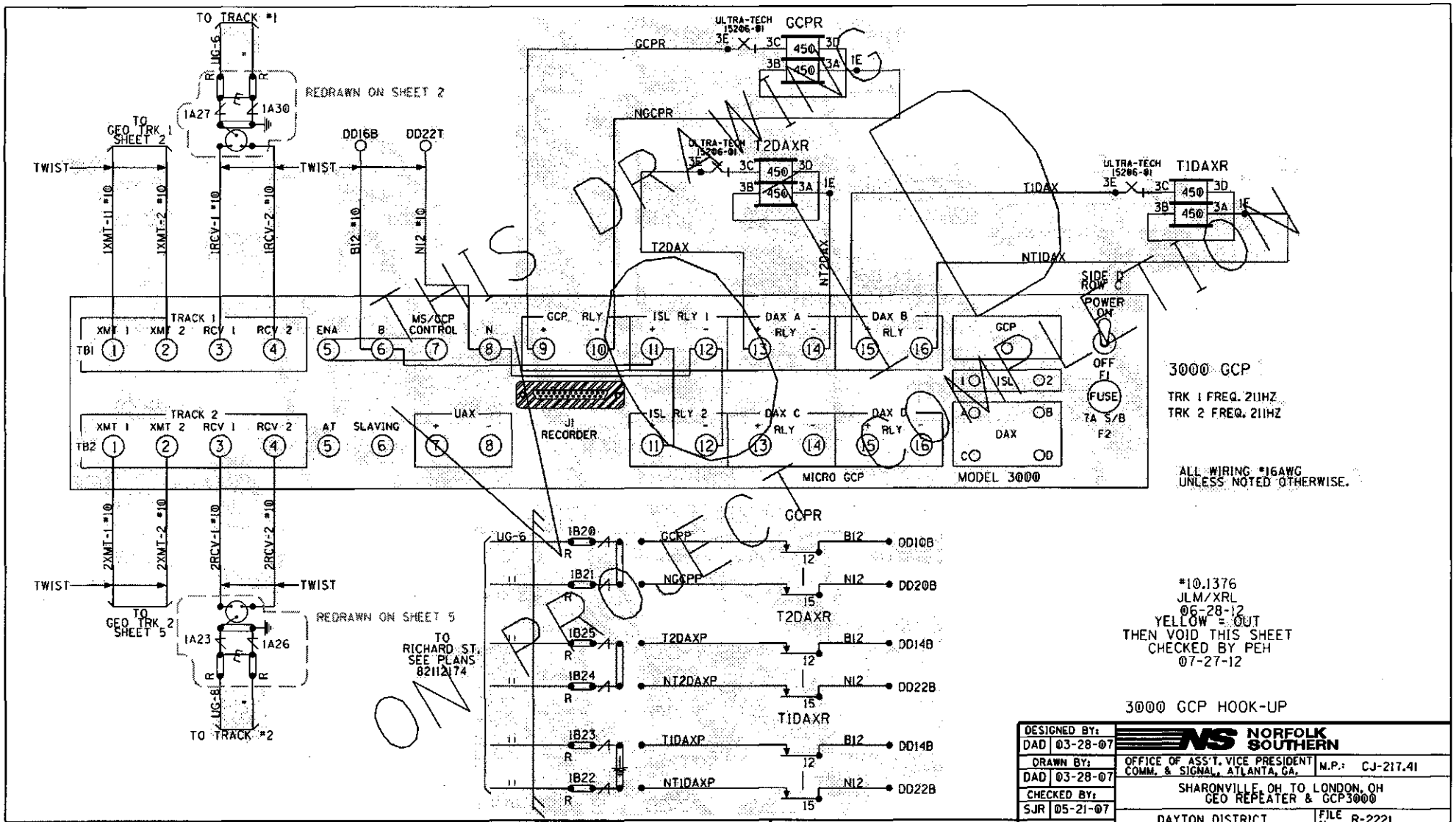

THIS DRAWING IS NOT ON PROJECT

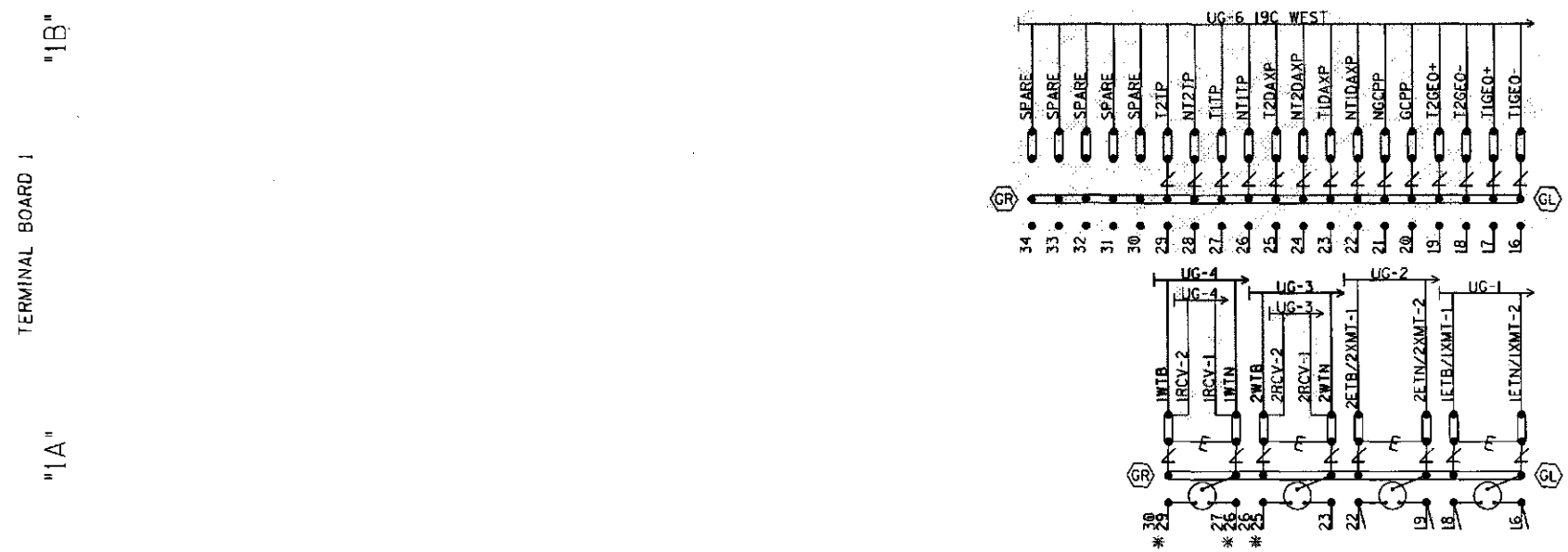

NOTE:

1. INSTALL TEST LINKS ON ALL TRACK WIRES AND ON ALL LOW VOLTAGE UNDERGROUND CABLE TERMINATIONS.

SEE FARADAY SHIELD DETAILS - 1A & 1B FOR HOW THIS PORTION OF THE FARADAY SHIELD IS PREDRILLED. ONLY INSTALL AND USE THE TERMINALS NEEDED.

= Heavy Duty Equalizer (022700-1X)

Clearview = Lightning Arrester (022485-28X)

= LPC-10560-51

GR / GL = TERMINALS GROUNDED TO SHIELD. 4 POST BLOCKS USE EITHER - GR - SERMMI PART NO. 61278 GL - SERMMI PART NO. 61278-1.

* = DRAFTING ERROR

*10.1376
JLM/XRL
06-28-12
RED = IN
YELLOW = OUT
CHECKED BY PEH
07-27-12

BACKBOARD DETAIL - 1A & 1B

DESIGNED BY: DAD 03-28-07	NORFOLK SOUTHERN		
DRAWN BY: DAD 03-28-07	OFFICE OF ASS'T. VICE PRESIDENT COMM. & SIGNAL, ATLANTA, GA.	M.P.: CJ-217.41	
CHECKED BY: SJR 05-21-07	SHARONVILLE, OH TO LONDON, OH GEO REPEATER & GCP3000		
IN SERVICE: AFS 10-17-07	DAYTON DISTRICT	FILE No. R-2221	
PROPERTY PENNSYLVANIA R.R.	CADD or DWG. No. 82112175.09	SHEET No. 9 of 16 20	

REVISION INITIALS

3000 PROGRAMMING	
* OF TKS/TRANSCEIVERS	2
T1 FREQUENCY	211Hz
T2 FREQUENCY	211Hz
T1 UNI/BIDIRECTIONAL	UNI
T2 UNI/BIDIRECTIONAL	UNI
T1 POWER-MAX/MED	HI
T2 POWER-MAX/MED	HI
T1 PRED/MS	PRED
T2 PRED/MS	PRED
T1 WARNING TIME	34 Sec
T2 WARNING TIME	34 Sec
T1 APPROACH DIST	2500 Ft
T2 APPROACH DIST	2500 Ft
UAX PU DLY (0=OFF)	0 Sec
ENA/UAX PU DLY(0=OFF)	0 Sec
T1 ISL DIST	0 Ft
T2 ISL DIST	0 Ft
* OF DAX'S	2 Ea
DAX A = T1/T2?	TRACK= 2
DAX A DIST	1230 Ft
DAX A WARN TIME	32 Sec
DAX B = T1/T2?	TRACK= 1
DAX B DIST	1230 Ft
DAX B WARN TIME	32 Sec
DAX C = T1/T2?	TRACK=
DAX C DIST	Ft
DAX C WARN TIME	Sec
DAX D = T1/T2?	TRACK=
DAX D DIST	Ft
DAX D WARN TIME	Sec
MASTER?/SLAVE?	MASTER
PASSWORD NO/YES	NO
RECORDER NO/YES	NO

EXPANDED PROGRAMMING	
T1-SW TO MS AT 10% OF EZ	
T2-SW TO MS AT 10% OF EZ	
T1-DELAY MS TO GCP	0 Sec
T2-DELAY MS TO GCP	0 Sec
T1 PRIME PRE. OFFSET	Ft
T2 PRIME PRE. OFFSET	Ft
PRIME PU TIME DELAY	15 Sec
DAX A PU DELAY	15 Sec
DAX B PU DELAY	15 Sec
DAX C PU DELAY	-1 Sec
DAX D PU DELAY	-1 Sec
ENHANCED DETECT MODE	OFF
BACK-TO-BACK	OFF
STATION STOP TIMER	10 Sec
T1* OF TRK. WIRES 4/6	4
T2* OF TRK. WIRES 4/6	4
LOW EX ADJUSTMENT	0
T1 LOW EZ DETECTION	OFF
T2 LOW EZ DETECTION	OFF
T1 LOW EZ DET. TIMER	10 Min
T2 LOW EZ DET. TIMER	10 Min
T1 POS. START EZ LEVEL	0
T2 POS. START EZ LEVEL	0
T1 POS. START T.O.	0 Min
T2 POS. START T.O.	0 Min
SET AT OPERATION	NORMAL
ADV. PRE.TIMER (0=OFF)	0 Sec

* = 1ST SLOT AT LEFT END OF BAY

MODEL 3000 GCP MODULE ASSEMBLIES

MODULES POSITION	M1	M2	M3	M4	M5	M6	M7	M8	M9	M10
MODULE NUMBERS	80211-F(1) *	80211-F(2)	80012 T/R	80012 T/R 2	80013 RLY DRV	80214 PROCS	80015 LOGG	80016 (1) DAX	80016 (2)DAX	80020 +80017
MODULES USED			X	X	X	X		X		X

NOTES:
1 - SEE IPI INSTRUCTION AND INSTALLATION MANUAL FOR 80211 ISLAND CALIBRATION PROCEDURE.

2 - TOGGLE SWITCH ON MOTHER BOARD:
UP = DUAL FREQ.
DOWN = SINGLE FREQ.

*10.1376
JLM/XRL
06-28-12
YELLOW = OUT
THEN VOID THIS SHEET
CHECKED BY PEH
07-27-12

DRAWING NOT ON PROJECT COMPLETION

3000 GCP SET-UP

DESIGNED BY: DAD 03-28-07	NORFOLK SOUTHERN	
DRAWN BY: DAD 03-28-07	OFFICE OF ASS'T. VICE PRESIDENT COMM. & SIGNAL, ATLANTA, GA.	M.P.: CJ-217.41
CHECKED BY: SJR 05-21-07	SHARONVILLE, OH TO LONDON, OH GEO REPEATER & GCP3000	
IN SERVICE: AFS 10-17-07	DAYTON DISTRICT	FILE No. R-2221
	CADD or DWG. No. 82112175.09X	SHEET No. 9 of 20

REVISION INITIALS										

PROPERTY
PENNSYLVANIA R.R.

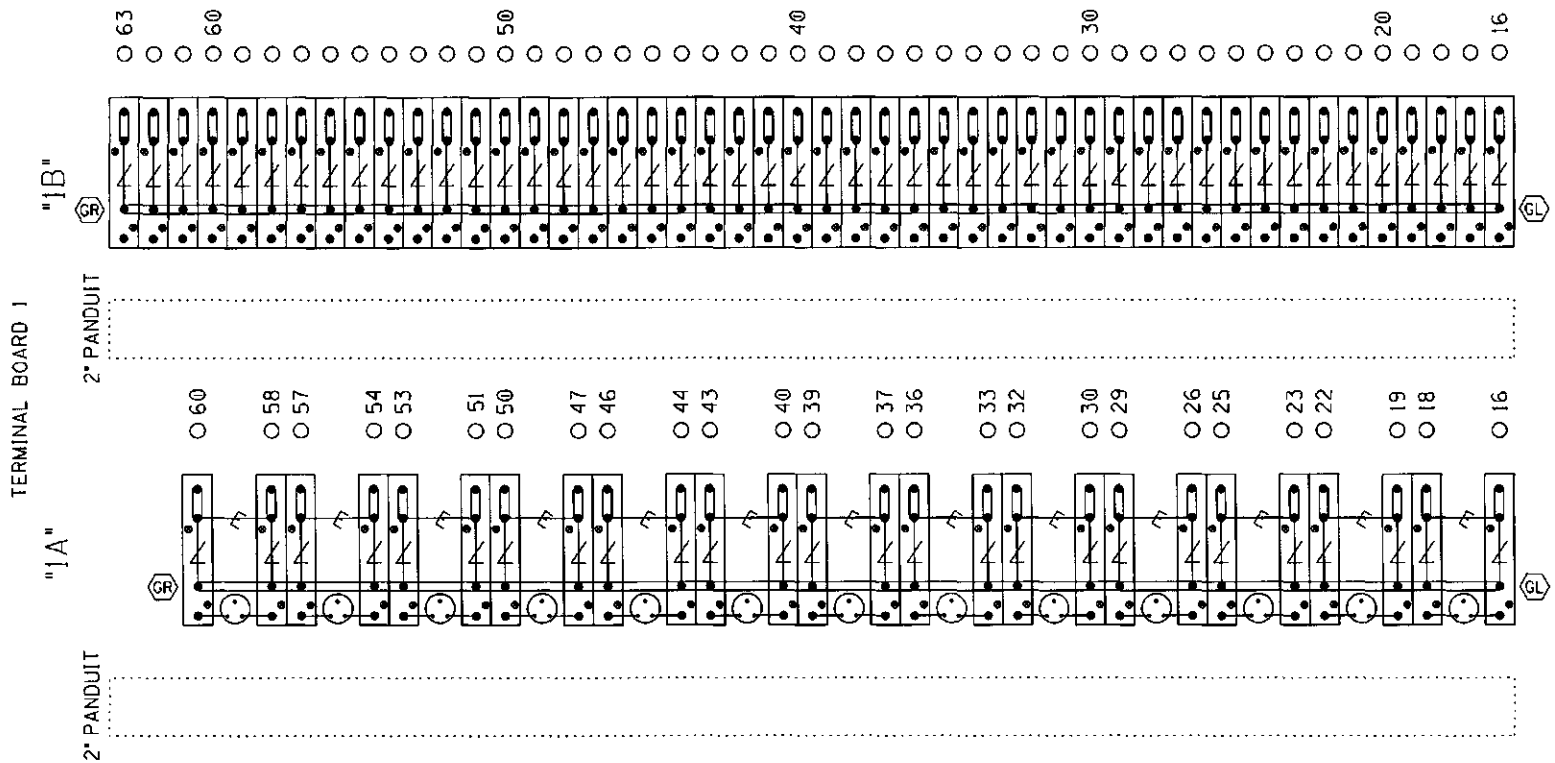

NOTE: IF THE FARADAY SHIELD WOULD EVER NEED TO BE DRILLED IN THE FIELD, PROPER PRECAUTIONS MUST BE TAKEN TO INSURE METAL SHAVINGS DO NOT GET INTO EXISTING TERMINALS/WIRES.

= Heavy Duty Equalizer (022700-1X)

Clearview = Lightning Arrester (022485-28X)

= LPC-10560-51

GR / GL = TERMINALS GROUNDED TO SHIELD. 4 POST BLOCKS USE EITHER - GR - SERMMI PART NO. 61278 GL - SERMMI PART NO. 61278-1.

*10.1376
JLM/XRL
06-28-12
RED = IN
YELLOW = OUT
CHECKED BY PEH
07-27-12

TERMINAL BOARD 1
FARADAY SHIELD DETAIL - 1A & 1B

= INDICATES PLACEMENT OF PANDUIT

THIS SHEET IS FOR REFERENCE ONLY, TO REFLECT HOW THE FARADAY SHIELD IS PREDRILLED. ONLY INSTALL AND USE THE TERMINALS NEEDED.

DESIGNED BY: DAD 03-28-07	NORFOLK SOUTHERN		
DRAWN BY: DAD 03-28-07	OFFICE OF ASS'T. VICE PRESIDENT COMM. & SIGNAL, ATLANTA, GA.	M.P.: CJ-217.41	
CHECKED BY: SJR 05-21-07	SHARONVILLE, OH TO LONDON, OH GEO REPEATER & GCP3000		
IN SERVICE: AFS 10-17-07	DAYTON DISTRICT	FILE No. R-2221	
	CADD or DWG. No. 82112175.10	SHEET No. 10 of 16 20	

REVISION INITIALS

PROPERTY
PENNSYLVANIA R.R.

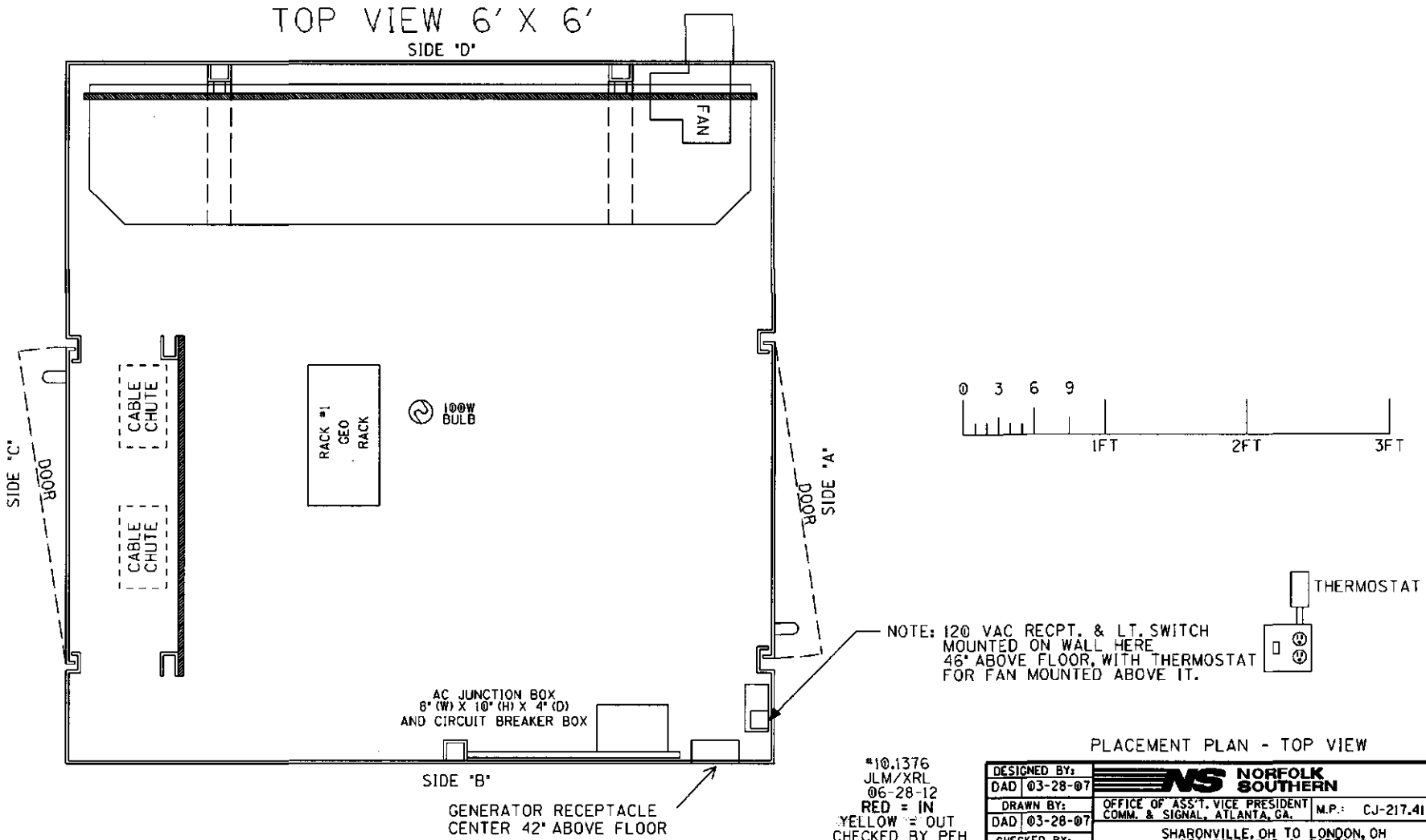

PLACEMENT PLAN - TOP VIEW

#10.1376
JLM/XRL
06-28-12
RED = IN
YELLOW = OUT
CHECKED BY PEH
07-27-12

DESIGNED BY: DAD 03-28-07	NORFOLK SOUTHERN		
DRAWN BY: DAD 03-28-07	OFFICE OF ASS'T. VICE PRESIDENT COMM. & SIGNAL, ATLANTA, GA.	M.P.: CJ-217.41	
CHECKED BY: SJR 05-21-07	SHARONVILLE, OH TO LONDON, OH GEO REPEATER & GCP3000		
IN SERVICE: AFS 10-17-07	DAYTON DISTRICT	FILE No. R-2221	
	CADD or DWG. No. 82112175.11	SHEET No. 11 of 16 20	

REVISION INITIALS

PROPERTY
PENNSYLVANIA R.R.

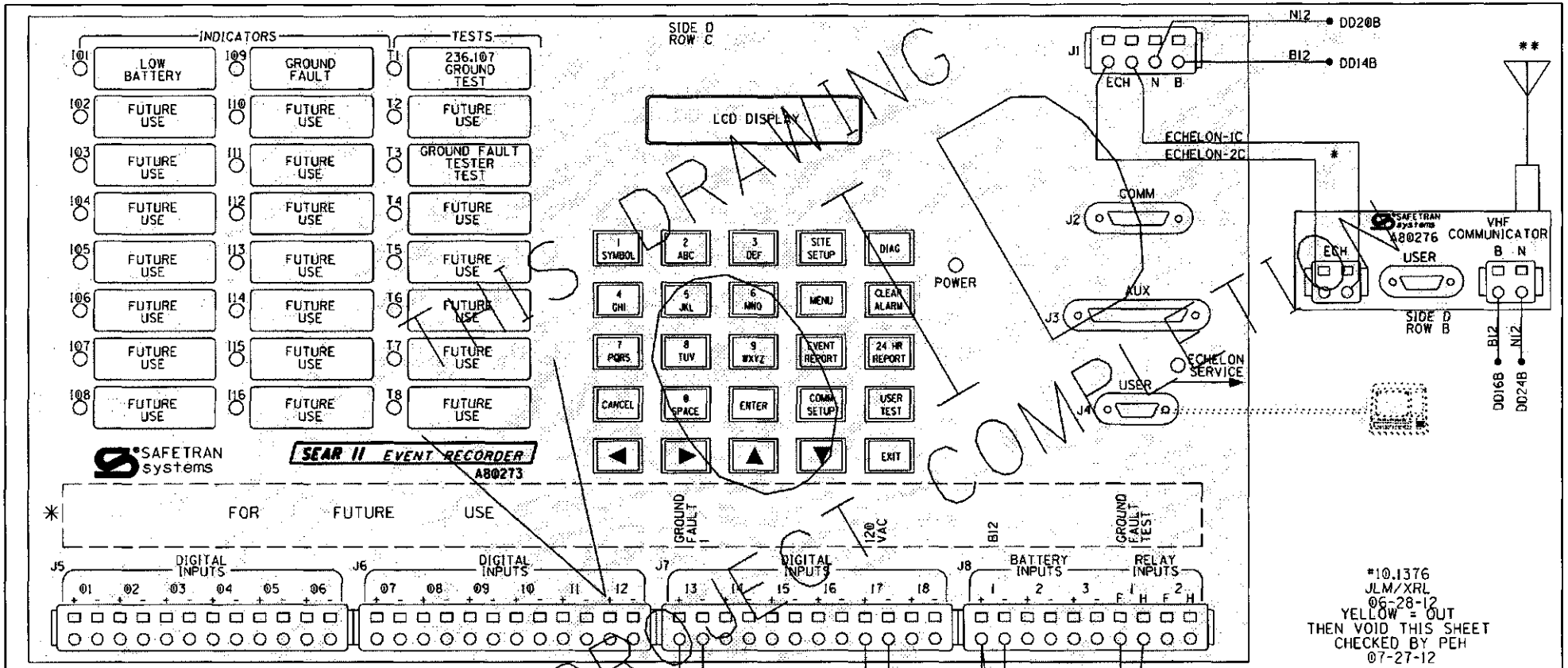

#10.1376
JLM/XRL
06-28-12
YELLOW = OUT
THEN VOID THIS SHEET
CHECKED BY PEH
07-27-12

THIS DRAWING IS NOT ON PROJECT COMPUTER

NOTES:

1. * = ECHELON CONNECTIONS NOT TO EXCEED 53' IN LENGTH AND TOTAL LENGTH NOT TO EXCEED 430' WITH A MAXIMUM OF 8 NODES. RECOMMEND USE BELDEN WIRE CABLE #8461 OR EQUIVALENT.
2. ✳ = I/O CONFIG NOT MARKED ON PANEL
3. ALL WIRING TO BE #16AWG UNLESS NOTED OTHERWISE.
4. ** = ANTENNA EXTERNALLY MOUNTED.

SEAR II EVENT RECORDER & VHF RADIO

DESIGNED BY: DAD 03-28-07	NORFOLK SOUTHERN		
DRAWN BY: DAD 03-28-07	OFFICE OF ASS'T. VICE PRESIDENT COMM. & SIGNAL, ATLANTA, GA.	M.P.: CJ-217.41	
CHECKED BY: SJR 05-21-07	SHARONVILLE, OH TO LONDON, OH GEO REPEATER & GCP3000		
IN SERVICE: AFS 10-17-07	DAYTON DISTRICT	FILE No. R-2221	
	CADD or DWG. No. 82112175.11X	SHEET No. 11 of 20	

REVISION INITIALS

PROPERTY
PENNSYLVANIA R.R.

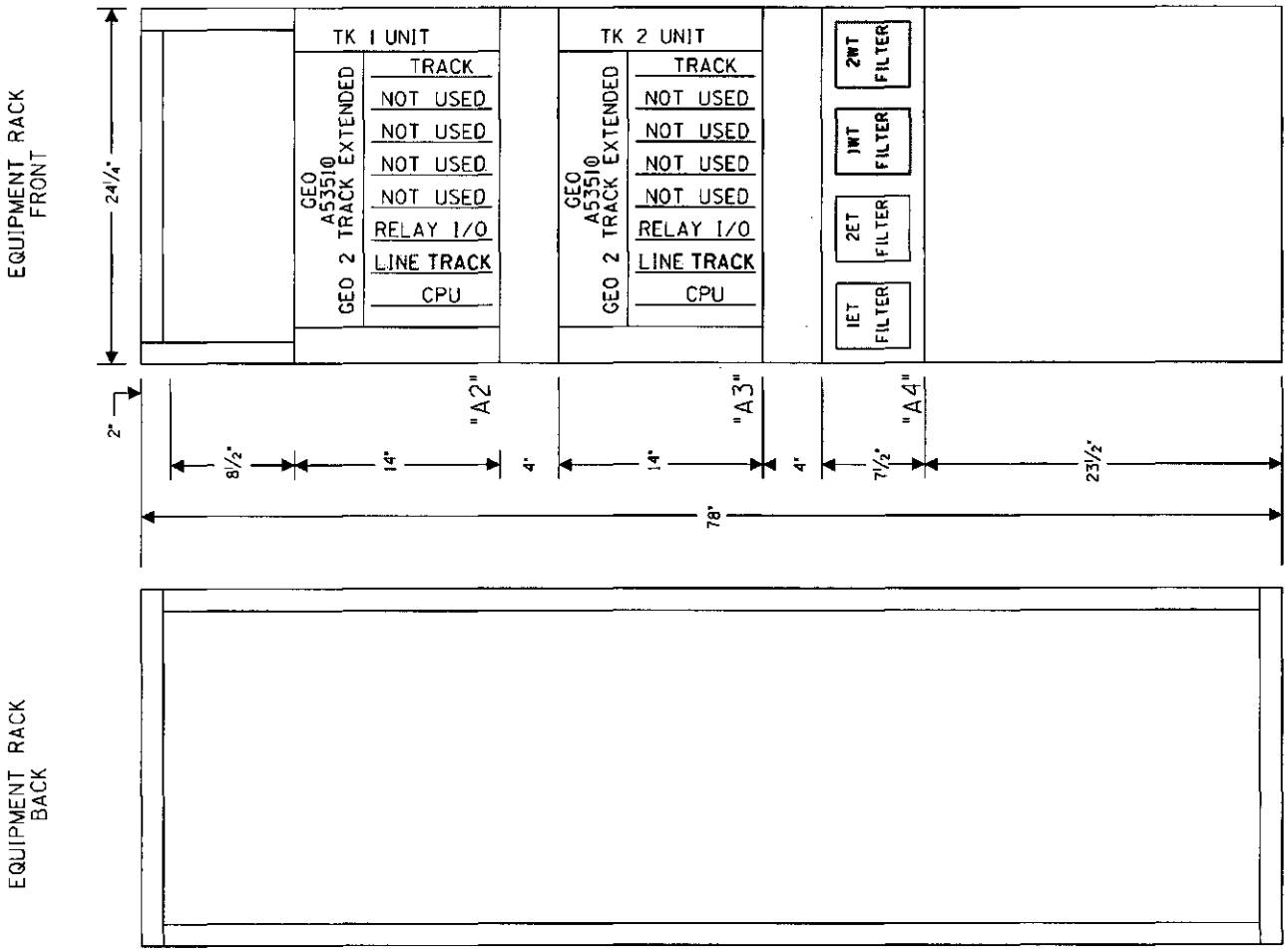

#10.1376
JLM/XRL
06-28-12
RED = IN
YELLOW = OUT
CHECKED BY PEH
07-27-12

RACK PLACEMENT

DESIGNED BY: DAD 03-28-07	NORFOLK SOUTHERN		
DRAWN BY: DAD 03-28-07	OFFICE OF ASS'T. VICE PRESIDENT COMM. & SIGNAL, ATLANTA, GA.	M.P.: CJ-217.41	
CHECKED BY: SJR 05-21-07	SHARONVILLE, OH TO LONDON, OH GEO REPEATER & GCP3000		
IN SERVICE: AFS 10-17-07	DAYTON DISTRICT	FILE No. R-2221	
	CADD or DWG. No. 82112175.12	SHEET No. 12 of 16 20	

REVISION INITIALS										

PROPERTY
PENNSYLVANIA R.R.

SITE SET UP PROCEDURE	
FUNCTION	LED DISPLAY
DATE	- -
TIME	:
DAYLIGHT SAVINGS TIME	
SITE NAME	
DOT NUMBER	N/A
MILEPOST	.
HOP ALARMS ?	NO HOP ALARMS

CPC PROTOCOL	02
ADDRESS IDENT. DIGIT	7
ADDRESS LENGTH	14
RAILROAD NUMBER	550
UNIT ADDRESS	LLLGGG
NODE NUMBER	SS
DEVICE NUMBER	01

**

CONTROL SYSTEM CONFIGURATION MENU QUESTIONS	
THE QUESTION	SELECT FROM MENU OPTION
GROUND FAULT TESTERS?	YES
FUTURE USE	FUTURE USE
"	"
"	"
"	"
"	"
"	"
"	"
"	"
"	"
"	"
"	"
"	"
"	"
"	"
"	"
"	"
"	"
"	"

VERIFY THE BATTERY SUPPLY VOLTAGES	
B12 BATTERY VOLTAGE AT SEAR II BATT INPUT 1	VOLT 1: .

THIS DRAWING WILL BE VOID UPON PROJECT COMPLETION

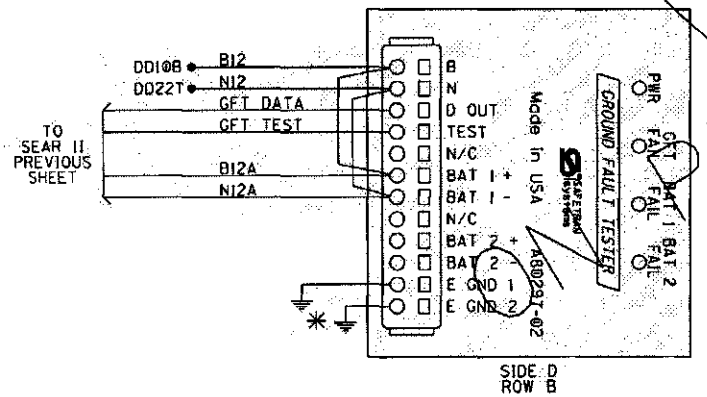

NOTES:

1. ALL WIRING TO BE #16AWG UNLESS NOTED OTHERWISE.
2. ✳ = CONNECT "E GND 1" AND "E GND 2" TO INDEPENDENT GROUND POINTS ON SIDE A AND SIDE B.
3. ✳✳ = LLL = CODE LINE
   GGG = LOCATION NUMBER
   SS = SUBNODE NUMBER

#10.1376
JLM/XRL
06-28-12
YELLOW = OUT
THEN VOID THIS SHEET
CHECKED BY PEH
07-27-12

SEAR II SET UP CHART
AND GROUND FAULT TESTER

DESIGNED BY: DAD 03-28-07	NORFOLK SOUTHERN		
DRAWN BY: DAD 03-28-07	OFFICE OF ASS'T. VICE PRESIDENT COMM. & SIGNAL, ATLANTA, GA.	M.P.: CJ-217.41	
CHECKED BY: SJR 05-21-07	SHARONVILLE, OH TO LONDON, OH GEO REPEATER & GCP3000		
IN SERVICE: AFS 10-17-07	DAYTON DISTRICT	FILE No. R-2221	
	CADD or DWG. No. 82112175.12X	SHEET No. 12 of 20	

REVISION INITIALS									

PROPERTY
PENNSYLVANIA R.R.

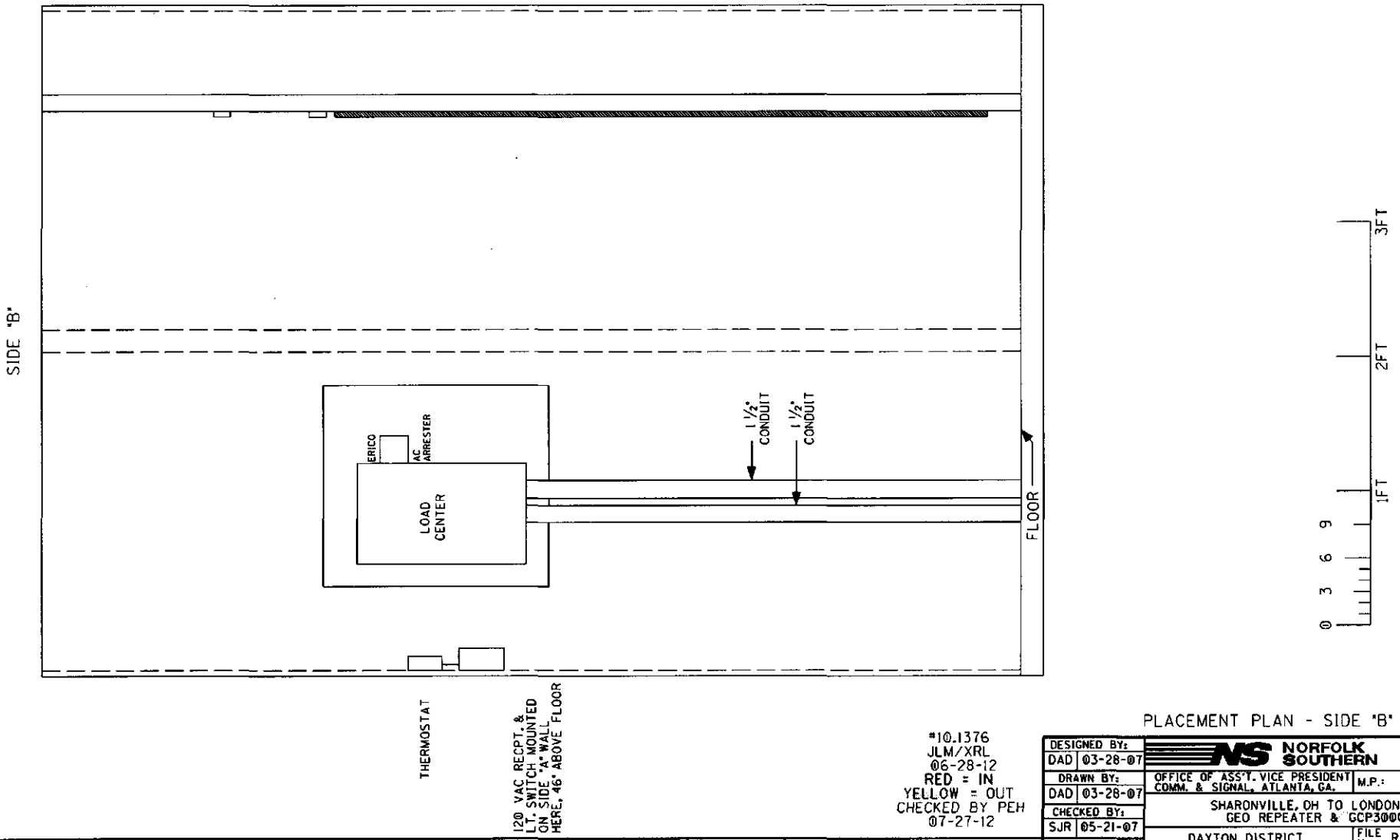

PLACEMENT PLAN - SIDE "B"

#10.1376
JLM/XRL
06-28-12
RED = IN
YELLOW = OUT
CHECKED BY PEH
07-27-12

DESIGNED BY: DAD 03-28-07	NORFOLK SOUTHERN	
DRAWN BY: DAD 03-28-07	OFFICE OF ASS'T. VICE PRESIDENT COMM. & SIGNAL, ATLANTA, GA.	M.P.: CJ-217.41
CHECKED BY: SJR 05-21-07	SHARONVILLE, OH TO LONDON, OH GEO REPEATER & GCP3000	
IN SERVICE: AFS 10-17-07	DAYTON DISTRICT	FILE No. R-2221
	CADD or DWG. No. 82112175.13	SHEET No. 13 of 16 20

REVISION INITIALS

PROPERTY
PENNSYLVANIA R.R.

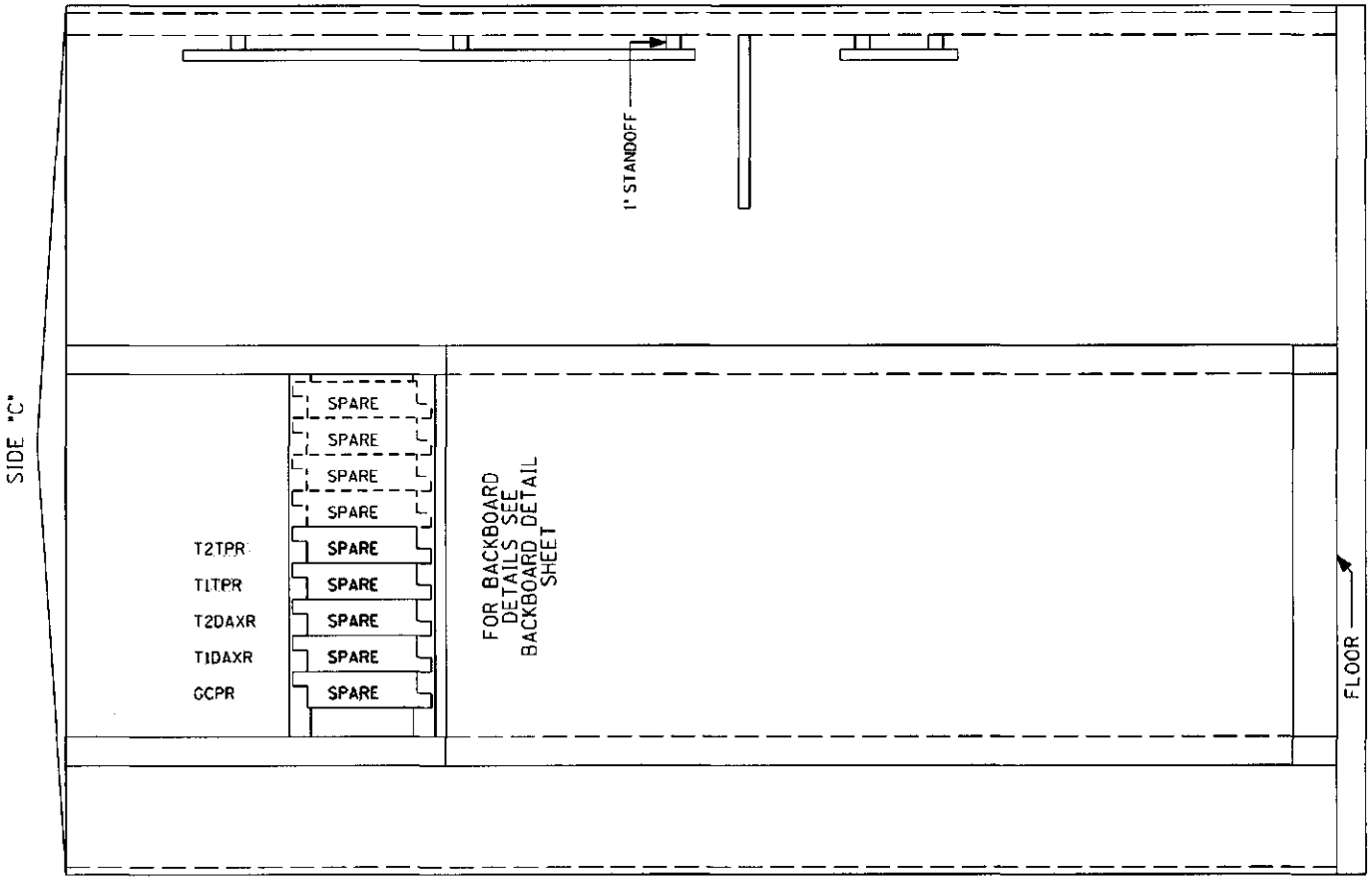

SAFETRAN, ALSTOM (GRS) RELAY CROSS REFERENCE LIST

SAFETRAN		ALSTOM (GRS)
400003	–	A62-308

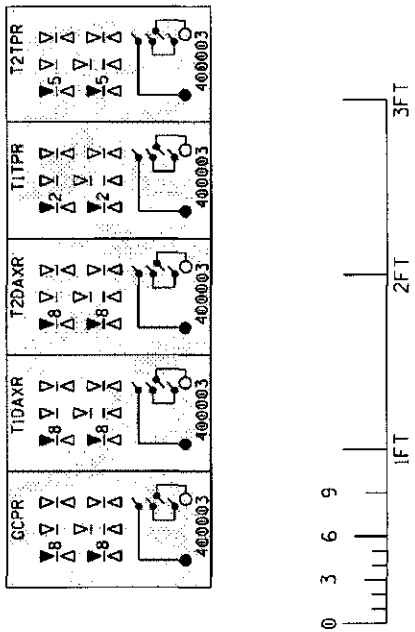

PLACEMENT PLAN - SIDE "C"

#10.1376
JLM/XRL
06-28-12
RED = IN
YELLOW = OUT
CHECKED BY PEH
07-27-12

DESIGNED BY: DAD 03-28-07	NORFOLK SOUTHERN	
DRAWN BY: DAD 03-28-07	OFFICE OF ASS'T. VICE PRESIDENT COMM. & SIGNAL, ATLANTA, GA.	M.P.: CJ-217.41
CHECKED BY: SJR 05-21-07	SHARONVILLE, OH TO LONDON, OH GEO REPEATER & GCP3000	
IN SERVICE: AFS 10-17-07	DAYTON DISTRICT	FILE No. R-2221
	CADD or DWG. No. 82112175.14	SHEET No. 14 of 16 20

REVISION INITIALS

PROPERTY
PENNSYLVANIA R.R.

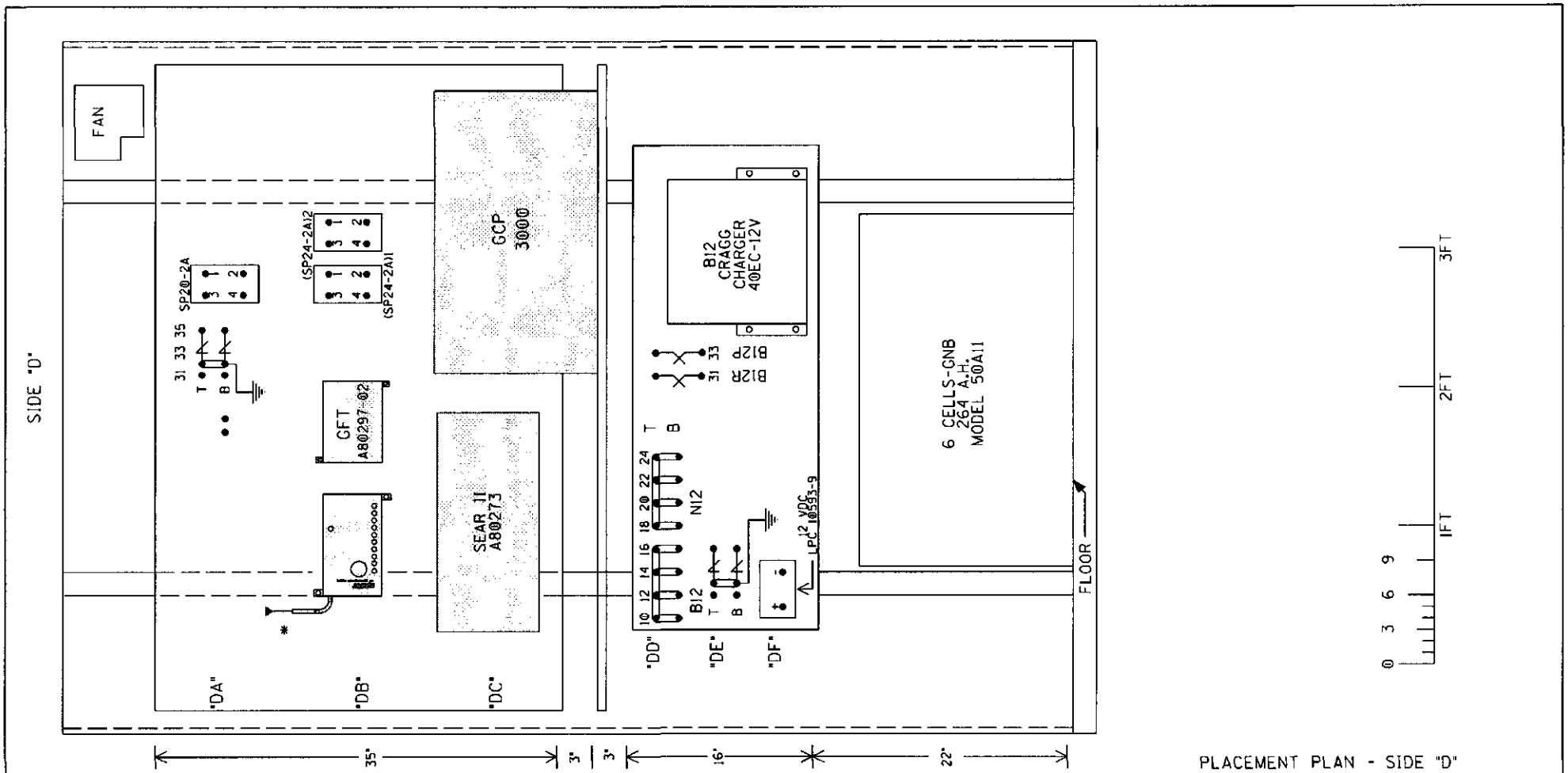

PLACEMENT PLAN - SIDE "D"

NOTE:
1. * = ANTENNA EXTERNALLY MOUNTED.

*10.1376
JLM/XRL
06-28-12
RED = IN
YELLOW = OUT
CHECKED BY PEH
07-27-12

DESIGNED BY: DAD 03-28-07	NORFOLK SOUTHERN		
DRAWN BY: DAD 03-28-07	OFFICE OF ASS'T. VICE PRESIDENT COMM. & SIGNAL, ATLANTA, GA.	M.P.: CJ-217.41	
CHECKED BY: SJR 05-21-07	SHARONVILLE, OH TO LONDON, OH GEO REPEATER & GCP3000		
IN SERVICE: AFS 10-17-07	DAYTON DISTRICT	FILE No. R-2221	
	CADD or DWG. No. 82112175.15	SHEET No. 15 of 16 20	

REVISION INITIALS

PROPERTY
PENNSYLVANIA R.R.

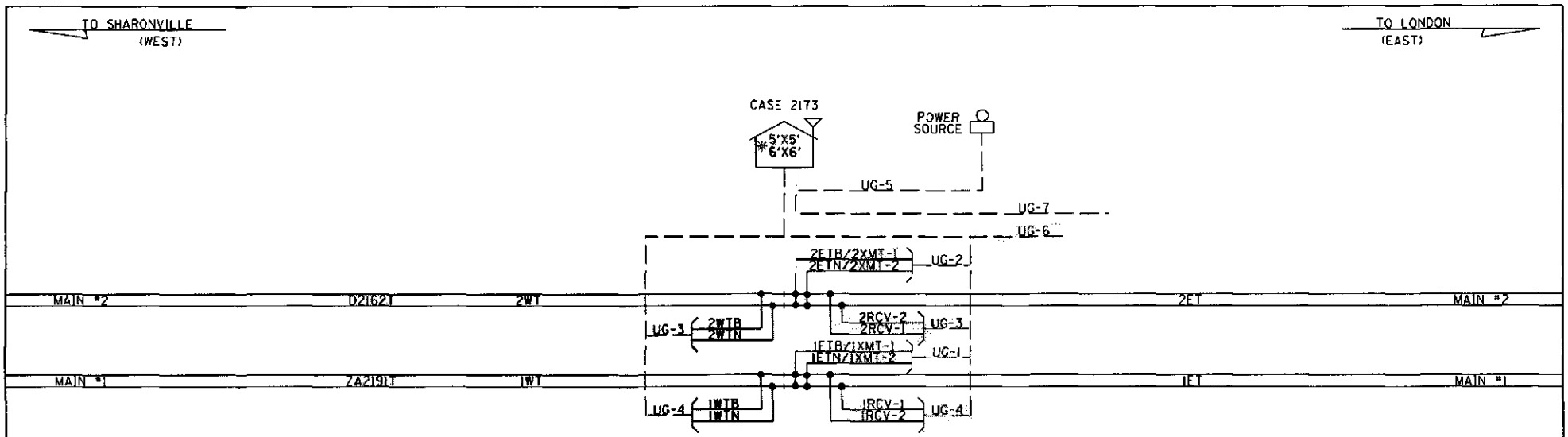

UG-1 2CUG #6 TW.TK.
UG-2 2CUG #6 TW.TK.
UG-3 2CUG #6 TW.TK. UG-3 2CUG #6 TW.TK.
UG-4 2CUG #6 TW.TK. UG-4 2CUG #6 TW.TK.
UG-5 3CUG #6 W/#8 GND
UG-6 19CUG #14
UG-7 3CUG #6 W/#8 GND

* = DRAFTING ERROR

#10.1376
JLM/XRL
06-28-12
RED = IN
YELLOW = OUT
CHECKED BY PEH
07-27-12

CABLE PLAN

DESIGNED BY: DAD 03-28-07	NORFOLK SOUTHERN	
DRAWN BY: DAD 03-28-07	OFFICE OF ASS'T. VICE PRESIDENT COMM. & SIGNAL, ATLANTA, GA.	M.P.: CJ-217.41
CHECKED BY: SJR 05-21-07	SHARONVILLE, OH TO LONDON, OH GEO REPEATER & GCP3000	
IN SERVICE: AFS 10-17-07	DAYTON DISTRICT	FILE No. R-2221
	CADD or DWG. No. 82112175.16	SHEET No. 16 of 16 20

REVISION INITIALS

PROPERTY
PENNSYLVANIA R.R.

7	07-09-12	JLM	XRL	PEH	6	04-03-97	DAD	SJR	SSC	5	7-22-81			4	4-18-81			3	6-21-77	2	6-30-77	1	10-10-66	REFERENCE
PLAN VOID ACCOUNT OF NEW SHELTER INSTALLED. SYSTEM FILE NO: WO/AFE NO: IN SERVICE: PER:					PLAN REVISED ACCOUNT OF CEO INSTALLED BETWEEN CP 216 AND CP 223. PROJECT NO: R-2221 SYSTEM FILE NO: 081-10.110 WO/AFE NO: N/A IN SERVICE: 10-17-07 PER: RFS				GG	SSC	CHANGES MADE TO ADD WESTBOUND APPROACH TIME OUT CIRCUIT. FILE M4730 PAC 2 IN SERVICE: 4-26-82 PER: R.E.H.				REVISED ACCOUNT OF DOUBLE GARDS "GA" LINE CIRCUIT. IN SERVICE: 4-25-81 PER: R.E.H. OLD PLAN NO. WM 00-8174-A1				MINOR CHANGES MADE AS IN SERVICE PER SUPV. C&S 3-9-77		CHANGES MADE PER INSPECTION AS IN SERVICE PLANS AND 12-17-76		AS IN SERVICE PER INSPECTORS FIELD CHECK OF 3-15-66	NEW PLAN SHOWS ALL OF INSTALLATION OF AUTO CROSSING PROTECTION AT VARIOUS STREETS IN MIAMISBURG, OHIO AUG. 2, 1965

CHECKED BY [illegible] 4/1/97

DRAWN BY S.T.H. 1/20/97

E.R. [illegible] 3-15-66

E.R. [illegible] 10-10-66

DIST. ENGR. 01

THIS LOCATION VOID ON PROJECT COMPLETION

CONRAIL

INDIANAPOLIS DIVISION

COMMUNICATION & SIGNAL DEPT. INDIANAPOLIS, IND.

CIRCUITS

HIGHWAY CROSSING PROTECTION

RICHARD ST.

MIAMISBURG, OHIO

AUGUST 2, 1965

SH. NO.		REVISION 1	2	3	4	5	6	7	8	9	10
1	REVISIONS, TITLE, NOTES AND INDEX	✓	✓	✓	✓	✓	✓				
2	LOCATION PLAN	✓	✓	✓	✓	✓	✓				
3	LINE CIRCUITS	✓	✓	✓		✓	✓				
4	FLASHER OPERATING CIRCUITS	✓	✓	✓		✓	✓				
5	CASE DETAIL	✓	✓	✓		✓	✓				

REV. 7
#10.1376
JLM/XRL
07-09-12
VOID/ALL OUT
CHECKED BY PEH
07-25-12

REV. NO. 6 DATE 10-17-07 8211-2174

SHEET 1

[illegible] DIST. ENGR. OF COMM. & SIG.

8211-2174.01

TYPICAL TITLE SHEET

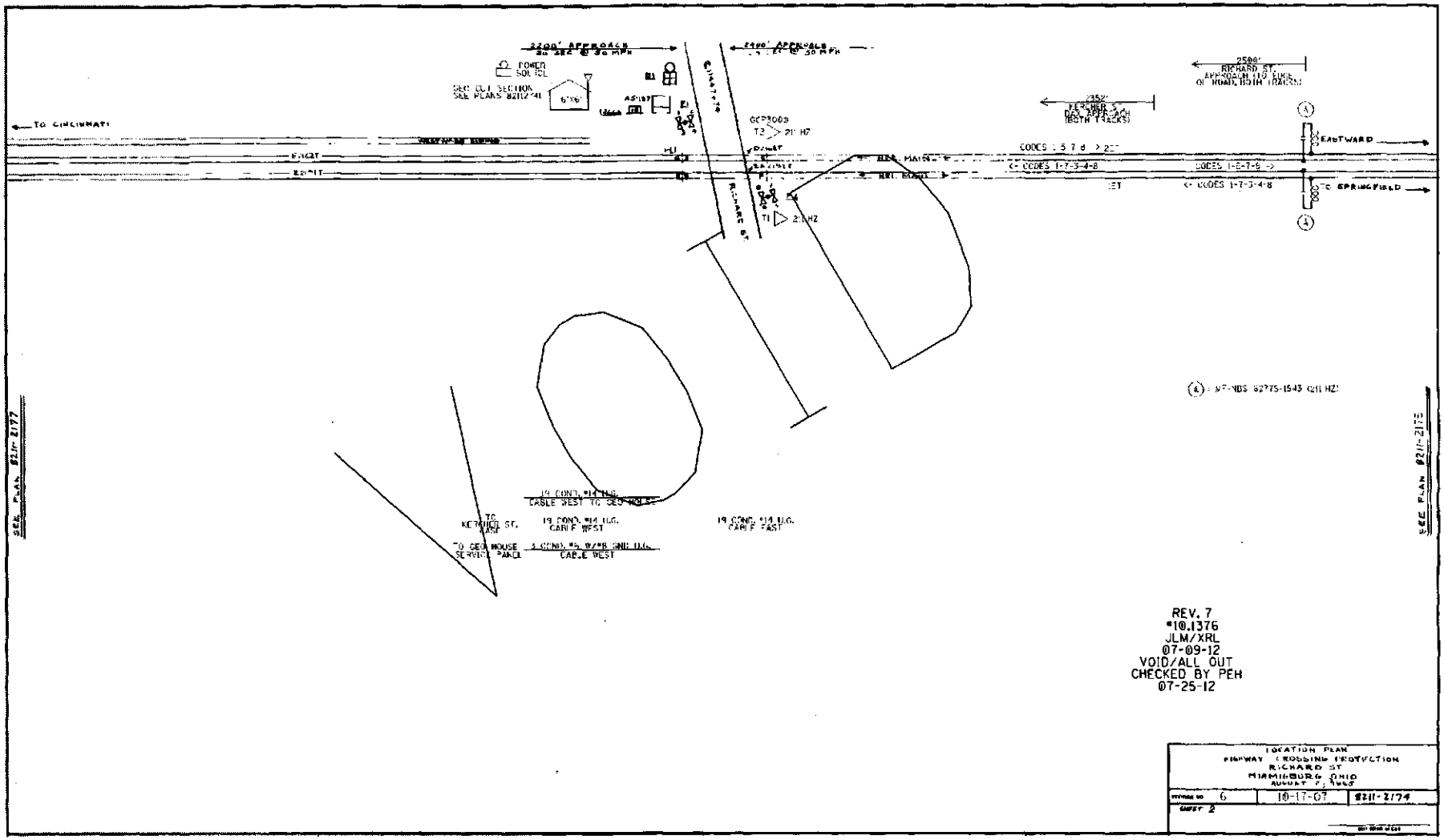

REV. 7
*10.1376
JLM/XRL
07-09-12
VOID/ALL OUT
CHECKED BY PEH
07-25-12

LOCATION PLAN HIGHWAY CROSSING PROTECTION RICHARD ST. MIAMISBURG, OHIO AUGUST 7, 1962		
REVISION NO 6	10-17-07	82112174
SHEET 2		

82112174.02

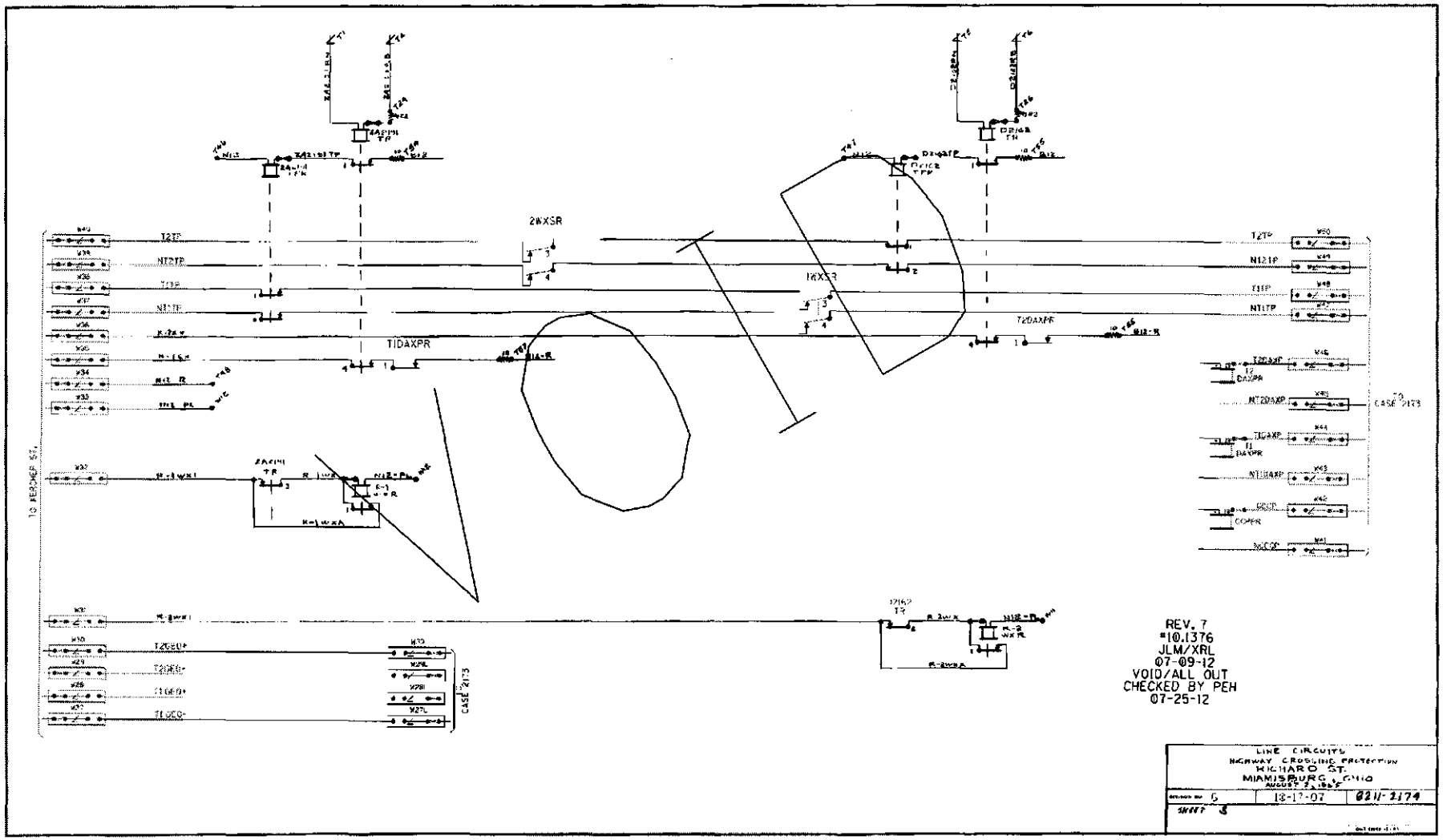
2WXSR
1WXSR
T1DAXPR
T2DAXPR
T2TP
NT2TP
T1TP
NT1TP
T2DAXP
NT2DAXP
T1DAXP
NT1DAXP
CASE 2173
REV. 7
#10.1376
JLM/XRL
07-09-12
VOID/ALL OUT
CHECKED BY PEH
07-25-12
LINE CIRCUITS
HIGHWAY CROSSING PROTECTION
RICHARD ST.
MIAMISBURG, OHIO
AUGUST 2, 1962
SHEET 3

8212174.03

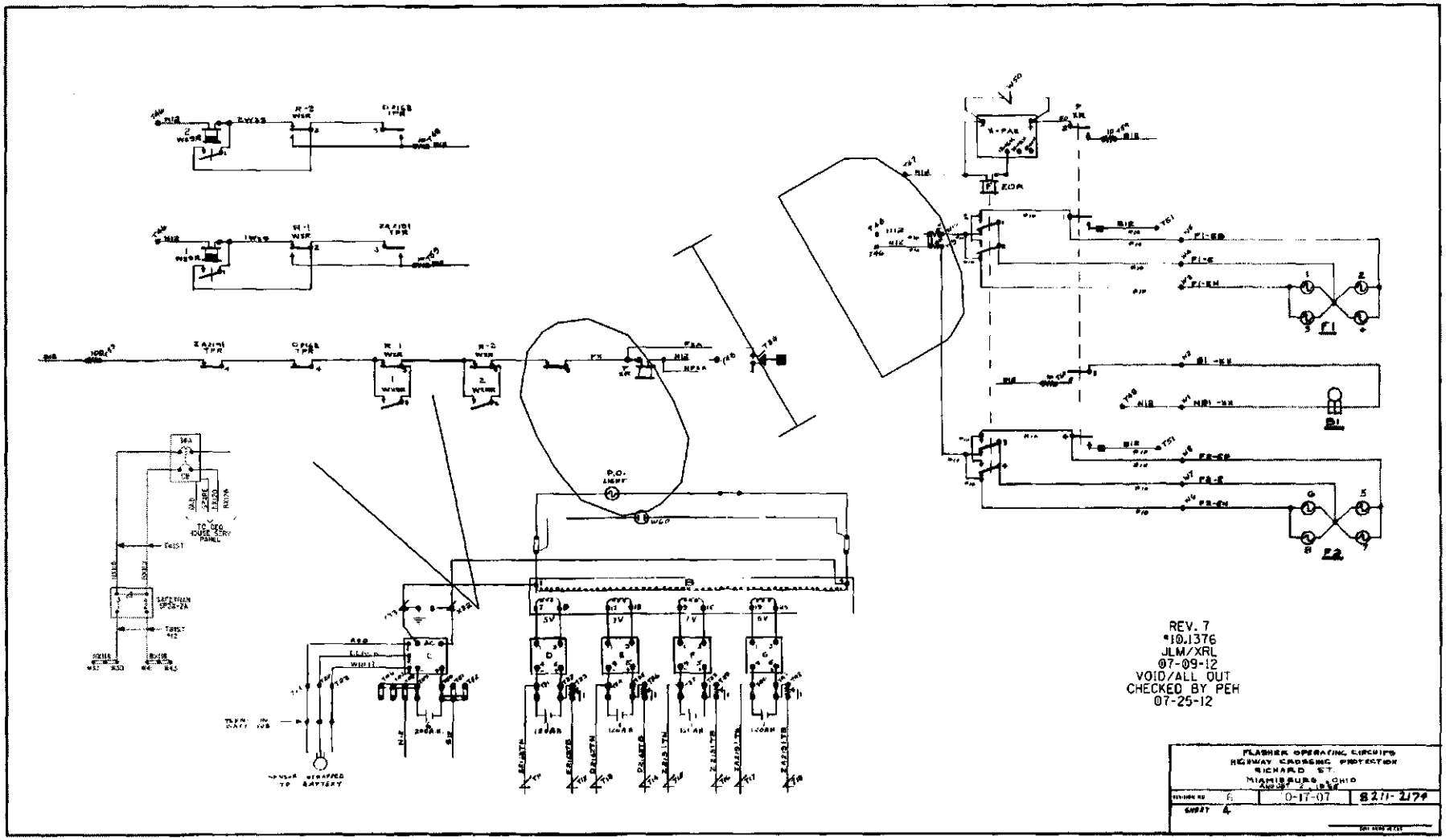

821121/4.04

MASTER TYPICAL 3-2-68

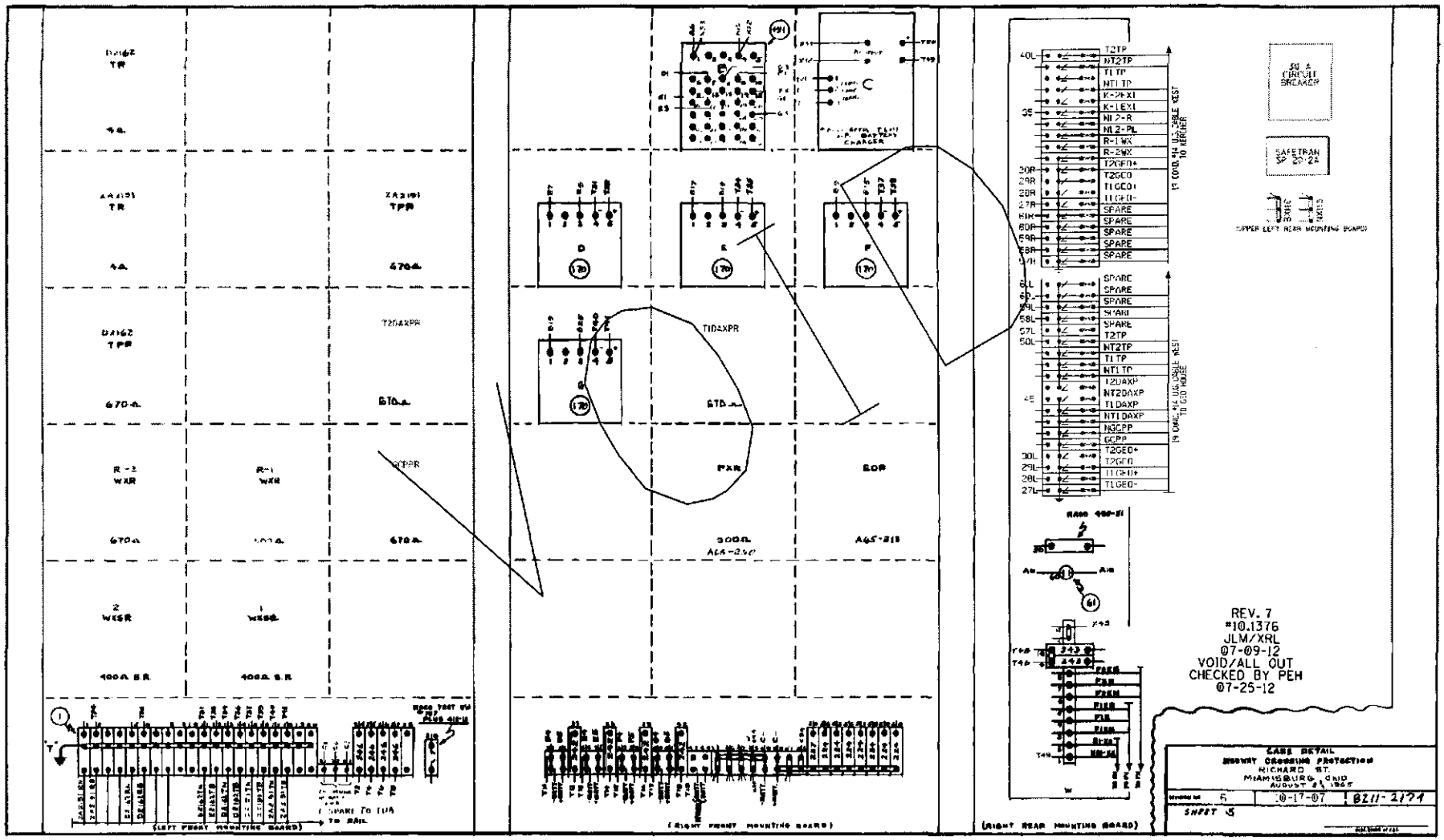
REV. 7
#10.1376
JLM/XRL
07-09-12
VOID/ALL OUT
CHECKED BY PEH
07-25-12
CASE DETAIL
HIGHWAY CROSSING PROTECTION
RICHARD ST.
MIAMISBURG, OHIO
AUGUST 3, 1967
6
10-17-07
82112174
SHEET 5
(LEFT FRONT MOUNTING BOARD)
(RIGHT FRONT MOUNTING BOARD)
(RIGHT REAR MOUNTING BOARD)
50 A CIRCUIT BREAKER
SAFETRAN SP 2012A
UPPER LEFT REAR MOUNTING BOARD
T2TP
NT2TP
T1TP
NT1TP
K-2EXI
K-1EXI
NL2-R
NL2-PL
R-1WX
R-2WX
T2GFD+
T2GCO
T1GCO+
T1GFD-
SPARE
T2DAXP
NT2DAXP
T1DAXP
NT1DAXP
NSCPP
SCPP
T2GED+
T2GFD
T1GFD+
T1GED-
1" COND. #14 U.G. CABLE WEST TO NEWCHER
1½ COND. #14 U.G. CABLE WEST TO GRD HOUSE
T1DAXPR
FXR
SCR
AGS-215
300Ω
AGS-250
R-2 WXR
R-1 WXR
WESR
400Ω S.R.
TR
TPR
670Ω
ST-100-6 TYPICAL HIGH HOUSE CASE AS-187

82112174.05

24-Aug-12

Detailed Estimate for Grade Crossing Warning Devices

City/State: MIAMISBURG, OH
MilePost: CJ-218.3
State Proj. No.:
S&E Proj. No.: 10.1382
Man Days: 132

Road: LINDEN AVE
DOT/AAR: 524657C
County: MONTGOMERY
File Number: 061-10.1023

*****Purchases - Others*****		
Meals and Lodging:	$17,740.80	
Rental of Equipment:	$18,480.00	
(2 Trucks, 1 Backhoe w/ Trailer and 1 Pipe-Pusher for 33 Days)		
Construction Supervision Vehicle:	$3,302.30	
Purchases - Other Total:		$39,523.10
*****Material And Additives*****		
Material Cost:	$102,724.00	
Sales and Use Tax:	$0.00	
Material Handling Freight:	$5,136.18	
Material Total:		$107,860.18
*****Labor And Additives*****		
Labor Cost:	$36,960.00	
(4 man crew at $1,120.00 a day for: 33 days)		
Payroll Tax & Overheads:	$49,097.66	
Preliminary Engineering:	$12,292.16	
Construction Supervision:	$10,433.81	
Labor Total:		$108,783.63
	Project Cost:	$256,166.91
	Scrap / Salvage Credit:	$0.00
	Project Total:	**$256,167.00**

Estimated on: 24-Aug-12

Estimated by: bf2cc

Estimate valid for 1 year from date of estimate

Norfolk Southern Railway

Highway Crossing Signalization Program - Material List

Do not substitute items without permission from S & E Engineering

City:	MIAMISBURG
Road:	LINDEN AVE
Mile Post:	CJ-218.3
Drawing Number:	82112183
State ProjectNumber:	
County:	MONTGOMERY
A A R Number:	524657C
Project Number:	10.1382
File Number:	061-10.1023
New File Number:	CX0117935
WBS:	F-00174-27-1
Store Number:	
Supervisor:	D.R. DRAKE
Tax Code:	

Vendor to supply the following copies after pricing:

1 Set - Material Management with original Invoice
2 Sets - with plans shipped in car with material
1 Set - S&EGen. Supt. Construction w/copy of invoice

Location: MIAMISBURG OH S&E Proj. No.: 10.1382 AFE No.: F-00174-27-1 Drawing No.: 82112183

Store No.: P.O.Number: Date Required: Date Shipped: Vendor: Xorail

Qty.	Class-Item-CD	UI	Price per Item	Total Price	Item Description	Quantity Shipped	Quantity Installed Date Quan.	Date Quan.	Date Quan.	Quantity Returned (Credit)	Special Instructions
3	670-360693-4	EA	$5.55	$16.65	AAR/DOT NUMBER PLATE/DECAL, ORDER 3 PER PROJECT. 60 DAY LEAD TIME. SUPPLIED BY S'TRAN.						
1	165-006505-4	EA	$1,075.23	$1,075.23	AC SERVICE, COMPLETE LESS METER BASE, ASSEMBLED ON 30' POLE						
40	670-119241-4	EA	$25.01	$1,000.40	ARRESTOR, LIGHTNING HEAVY DUTY CLEAR VIEW SAFETRAN 022585-1X						
13	105-288384-4	EA	$271.16	$3,525.08	BATTERY,GNB 368AH MODEL 50G15 SINGLE CELL 2.25 VOLTS, FOR USE WITH CROSSINGS DESIGNED AFTER 09/09						
2	670-980689-4	EA	$75.48	$150.96	BRACKET HIGH WIND, (RIGID 3'), WIG- 191036, WALRUS TUSK TYPE						
2	670-561375-4	EA	$1,208.79	$2,417.58	BRACKET, GATE SAVER, NEG385102GS, SPRING LOADED SWING AWAY ADAPTER FOR FIBERGLASS/ALUMINUM GATES, USE WITH GATE 38' AND LESS						
1	670-356949-4	EA	$90.00	$90.00	CABLE, 10' GENERATOR HOOK UP, SERRMI P/N 40524. FEMALE CONNECTOR						
350	465-939422-4	LF	$2.92	$1,022.00	CABLE, UG 12 CONDUCTOR NO 14 AWG SOLID EACH CONDUCTOR WITH 5/64 IN INSULATION 10 MIL						
500	465-292862-4	LF	$1.36	$680.00	CABLE, UG 2-6 TWISTED, S-23 OKONITE 113-12-3933 SOLID TINNED CONDUCTOR						
1050	465-948605-4	LF	$6.51	$6,835.50	CABLE, UG 27 CONDUCTOR NO 14 AWG SOLID EACH CONDUCTOR WITH 5/64 IN INSULATION 10 MIL						
350	465-292929-4	LF	$4.13	$1,445.50	CABLE, UG 5 COND. NO. 6 AWG SOLID COPPER CABLE TO MEET NS CORP. SPEC. FOR SIGNAL						
350	465-791835-4	FT	$3.54	$1,239.00	CABLE, UG AC ENTRANCE 3C#6-7X OKONITE FMPF-L 094-078 TR W/G 1 X 8 7X W010 BRZ TAPE 600V PRODUCT CODE 206-11-6070						
80	165-544477-4	FT	$2.61	$208.80	CONDUIT, 4"x10' PVC, SCHEDULE 80 BELL CONNECTOR AT ONE END, 1/2 PT. GLUE IN KIT 670-123298-4						
4	670-664917-4	EA	$90.11	$360.44	CONNECTOR KIT, WELDED FAR RAIL, CONSISTING OF RUBBER HOSE PROPERLY DRILLED, BONDSTRAND, 1 SPLICING SLEEVE, 1 REDUCING SLEEVE, 3 CLAMPS, 1 TRACK CLIP, 1 WEB WELDED TRACK CONNECTOR, 1 WELD METAL, SAFETRAN 111359-2X						

APPROVED BY STATE	APPROVED BY RAILROAD	CAR NUMBER	SEAL NUMBER

Location: MIAMISBURG OH S&E Proj. No.: 10.1382 AFE No.: F-00174-27-1 Drawing No.: 82112183

Store No.: P.O.Number: Date Required: Date Shipped: Vendor: Xorail

Qty.	Class-Item-CD	UI	Price per Item	Total Price	Item Description	Quantity Shipped	Quantity Installed Date Quan.	Date Quan.	Date Quan.	Quantity Returned (Credit)	Special Instructions
4	670-632520-4	EA	$79.69	$318.76	CONNECTOR KIT, WELDED NEAR RAIL, CONSISTING OF, RUBBER HOSE PROPERLY DRILLED, BONDSTRAND, SPLICING SLEEVE, 1 REDUCING SLEEVE, 5 CLAMPS, 1 TRACK CLIP, 1 WEB WELDED TRACK CONNECTOR, 1 WELD METAL, SAFETRAN 111359-1X						
2	670-793404-4	EA	$1,159.00	$2,318.00	COUNTERWEIGHT PKAGE, 17-24'GATE S'TRAN S- MECH ONLY, STAINLESS, TO INCLUDE HUB, SUPPORT ARMS						
4	670-760012-4	EA	$44.32	$177.28	COVER, FOR 1 WAY FLASHING LIGHT ASSY. 18 OZ. BLACK VINYL COATED NYLON. ====TO COVER 2 LAMPS====						
1	670-986650-4	EA	$354.27	$354.27	DISPOSAL, CONSTRUCTION DEBRIS AND CLEANING X'ING EQUIPMENT CONTAINER						
1	670-000004-4	EA	$700.00	$700.00	FCC LICENSE FOR MONITOR/RADIO						
2	670-000003-4	EA	$255.85	$511.70	FILL/STONE #57, QUANITY IS BASED ON TRUCK LOAD PLUS DELIVERY COST						
2	670-015231-4	EA	$599.40	$1,198.80	FOUNDATION, DIXIE,S-2 GATE 2'6"X2'6"X5'6" ASSEMBLED						
2	670-257031-4	EA	$422.36	$844.72	GATE ARM, FIBERGLASS-ALUMINUM, 17-24 FT, INCLUDES GATE GUARD FOR GATE LIGHT CABLE. HIGH INTENSITY VERTICAL STRIPES. NEG P/N 8003-244NFS/CG, SSC T18115						
1	670-696894-4	EA	$34,574.48	$34,574.48	GCP4000 - 2 TRK (2TC) - REDUNDANT - 40/40 AMP WIRED RACK EQUIP. FOR 6X8 XING SHELTER, (INCL. 2 TRK CHASSIS A80465, 4 TRK MODS. A80418, 2-SSCC A80405, 2 CPU A80403, 1 SEAR A80410, 1 DISPLAY A80407, , 2-40 AMP CHARGERS) IPN: 003131-4X						
2	670-468243-4	EA	$45.20	$90.40	INDUCTOR, SIMULATED TRACK SAFETRAN 8V617-0400						
1	670-477991-4	EA	$410.00	$410.00	KIT, GROUNDING ASSY FOR AL I/S INCLUDES 8 GRD RDS,200'#4WIRE,12 4 WIRE ONE-SHOTS. ERICO SBK206						
1	670-123298-4	EA	$345.97	$345.97	KIT, HARDWARE SUPPLIES REQUIRED X'ING P'CKAGES. WEB CONNECTORS FOR SHUNT(8EA) TAPE, AMPS,P'GUM PAINT,SLEEVES,TAGS,GLUE, 100 EA WHITE TAGS,)NE CAN BLUE MARKING PAINT ETC...						
2	670-764166-4	EA	$1,240.19	$2,480.38	LAMP ASSY, 5" MAST MTG. 2W IND. 20" BKGRD, FLX-12 W/BULB S'TRAN #042003-487XNS						
6	165-643547-4	EA	$5.97	$35.82	LAMP, 18 WATT 10 VOLT S-11 SC BAY 18S11/1SC CLEAR RWY SIGNAL UJ-71463 GE						

APPROVED BY STATE	APPROVED BY RAILROAD	CAR NUMBER	SEAL NUMBER

Location: MIAMISBURG OH S&E Proj. No.: 10.1382 AFE No.: F-00174-27-1 Drawing No.: 82112183

Store No.: P.O.Number: Date Required: Date Shipped: Vendor: Xorail

Qty.	Class-Item-CD	UI	Price per Item	Total Price	Item Description	Quantity Shipped	Quantity Installed Date Quan.	Date Quan.	Date Quan.	Quantity Returned (Credit)	Special Instructions
40	670-440826-4	EA	$2.22	$88.80	LINK, SAFETRAN 024620-1X INSL TESTING COMP 1 IN CENTER SIGNAL CIRCUITS CR 02-286662						
4	255-590880-4	EA	$16.72	$66.88	LOCK, AMERICAN LOCK MODEL H-10KA KEYED ALIKE TO PRIVATE KEYWAY D456 AND STAMPED "NS SIG"						
2	670-637778-4	EA	$1,325.00	$2,650.00	MAST, 5" ALUMINUM 13'10" WITH DOUBLE JCT. BOX BASE. S'TRAN P# 070519-11AX.						
2	670-850933-4	EA	$3,925.01	$7,850.02	MECHANISM, GATE MODEL S-60, WITH DEFROSTER AND MINI TRACKSIDE SENSOR S'TRAN # 0740007-X002B3						
3	670-000001-4	EA	$726.23	$2,178.69	MISC. EXPENSE, MATERAIL/FILL						
1	670-000007-4	EA	$307.02	$307.02	MISC. EXPENSE, TRACK WORK (I.E. INS JTS, RODS, ETC.)						
1	000-000000-4	EA	$5,000.00	$5,000.00	MISC. EXPENSE, UNDERGROUND BORING						
4	670-001347-4	EA	$57.10	$228.40	PACKAGE, HARDWARE SIGN 5 IN. MOUNTING, SERRMI A1250-5, HARMON @200965-000, OR						
1	255-646807-4	EA	$31.19	$31.19	PADLOCK, SAFETRAN PART NO. 030399-29X SCREW TYPE FOR CIR CONTROLLER AND BTY. BOX						
1	670-514605-4	EA	$11.11	$11.11	PINNACLE, W-C SECT 1-11, 4"& 5" REF K1 110-8 OR SAFETRAN NO. @035045-503X						
4	670-259211-4	EA	$47.25	$189.00	PLUG BOARD KIT, TYPE B-1 & VOLTAGE TEST TERMINAL, SAFETRAN 420000-75X						
1	165-902002-4	EA	$303.43	$303.43	PROTECTOR, SURGE 120/240VAC, ERICO P/N EPD120/240TDFL						
5	465-002899-4	EA	$40.24	$201.20	REEL, CABLE DISPOSABLE FOR CROSSING SIGNAL PACKAGES						
4	670-742096-4	EA	$43.68	$174.72	RELAY INTERFACE PROBE, ULTRATECH PN 16031-00						
1	670-024861-4	EA	$437.35	$437.35	RELAY RACK, SWING, FARADAY SHELTER FOR EIGHT B1 RELAYS, SAFETRAN P/N 057883-1X						
4	670-707995-4	EA	$510.12	$2,040.48	RELAY, TYPE B1, NEV LINE, 900 OHMS,.008 AMPERES GRS A62-308 OR SAFETRAN @400003						
2	435-805560-4	EA	$2.78	$5.56	SAND, 25LB BAG FOR CABLE ENTRANCE INTO THE SHELTER						
1	670-027556-4	EA	$2,629.77	$2,629.77	SEARIIi, ACCESSORY PACKAGE, W/2-ILOD, 1-E-BELL, 2-GTS, 1-GFT, 1-VHFC, WITHOUT MTSS/SEAR UNIT						

APPROVED BY STATE	APPROVED BY RAILROAD	CAR NUMBER	SEAL NUMBER

Location: MIAMISBURG OH S&E Proj. No.: 10.1382 AFE No.: F-00174-27-1 Drawing No.: 82112183

Store No.: P.O.Number: Date Required: Date Shipped: Vendor: Xorail

Qty.	Class-Item-CD	UI	Price per Item	Total Price	Item Description	Quantity Shipped	Quantity Installed Date Quan.	Date Quan.	Date Quan.	Quantity Returned (Credit)	Special Instructions
1	670-749325-4	EA	$226.97	$226.97	SHELF, FOLDING, FOR LAPTOP USE IN FARADAY 6X8 SHELTER, SAFETRAN 052852-128X						
1	670-756057-4	EA	$9,808.80	$9,808.80	SHELTER, 6'X8' ALUMN FARADAY W/CABLE CHUTES BEHIND TERMINAL BOARD, W /2EA EQUIPMENT RACKS, W/GEN RECEPTICAL, BREAKER BOX, GFI OUTLET FOR LAPTOP SHELF SAFETRAN 058400-68-86						
4	670-586967-4	EA	$42.98	$171.92	SHUNT COVER W/LAG SCREWS, 19"X19", SERRMI #40271, ORDER 1 PER SHUNT						
4	670-688850-4	EA	$369.89	$1,479.56	SHUNT, MULTI-FREQ. #62775-3497 SAFETRAN NARROW BAND						
2	670-393331-4	EA	$37.43	$74.86	SIGN CROSSING MALFUNCTION ASSEMBLY FOR 4" AND 5" MAST, SAFETRAN #T17215						
2	670-554843-4	EA	$77.05	$154.10	SIGN, 2 TRACK SIGN, HIGH INTENSITY, SAFETRAN #035207-2HX						
2	670-016346-4	EA	$143.23	$286.46	SIGN, X-BUCK, HI-INTENSIVE REFLECTIVE FRT. & BACK FOR ALL STATES, SAFETRAN# 035200-91X						
1	670-330382-4	RL	$18.06	$18.06	TAPE, THOR 3" DURATEC, ORANGE 1000' LENGTHS. "WARNING STOP DIGGING"						
54	670-478560-4	EA	$20.56	$1,110.24	TERMINAL BLOCK, ERICO 4 POST P/N B2700A2C1WH W/HARDWARE LESS LIGHTNING ARRESTOR						
4	610-065626-4	EA	$18.18	$72.72	ULTRA-TECH 15206-01 CONNECTIVITY BLOCK FOR GRS B1 RELAY						
4	670-007238-4	EA	$117.04	$468.16	UNIT, THE INSTALLATION AND WIRING OF A DEVICE WHICH REQUIRE A MINIMUM OF FOUR WIRE CONNECT-						
1	450-986008-4	EA	$30.45	$30.45	WRENCH, TEST POST TYPE B DWG 55393-3, GR.1						

Total Material: $102,723.64

APPROVED BY STATE	APPROVED BY RAILROAD	CAR NUMBER	SEAL NUMBER

SH. NO.	CONTENTS
NX1	INDEX SHEET
1	LAYOUT
2	PROFILE
3	CABLE PLAN
4	LOAD CENTER WIRING
5	B12 & B16 RECTIFIER HOOK-UP
6	4000 GCP 2-TK CHASSIS & MODULE LAYOUT
7	4000 GCP PROGRAMMING SETUP
8	4000 GCP PROGRAMMING SETUP
9	CONNECTORS FOR MODULES (A80418)
10	CPU MODULE,SEAR III, GFT & VHF HOOK-UPS
11	SEAR III PROGRAMMING SETUP
12	CONNECTORS FOR SSCC#1 MODULE, ILOD#1 HOOK-UP
13	CONNECTORS FOR SSCC#2 MODULE, ILOD#2 HOOK-UP
14	DAX CIRCUITS
15	"A" FLASHER AND GATE LIGHTS
16	"B" FLASHER AND GATE LIGHTS
17	BACKBOARD DETAIL - 1A & 1B
18	REAR BACKBOARD DETAIL - 1A & 1B
19	BACKBOARD DETAIL - 1C
20	FARADAY SHIELD DETAIL - 1A & 1B
21	FARADAY SHIELD DETAIL - 1C
22	6'X8' HOUSE - SIDE "C"
23	6'X8' HOUSE - SIDE "A"
24	6'X8' HOUSE (SIDE "B" & TOP VIEW)

IN SERVICE _____ SIGNED _____ DATE

☐ S&E ENGINEERING COPY
☐ CONSTRUCTION OFFICE COPY
RETURN TO S&E ENG. AFTER COMPLETION
☐ FIELD COPY
RETURN TO CASE AFTER COMPLETION
☐ PROJECT ENGINEER COPY

PROJECT #10.1382

INDEX SHEET

FILE No. CX0117935

DESIGNED BY: JLM 07-13-12	NORFOLK SOUTHERN
DRAWN BY: XRL 07-13-12	OFFICE OF ASS'T. VICE PRESIDENT COMM. & SIGNAL, ATLANTA, GA. — M.P.: CJ-218.30
CHECKED BY: PEH 07-26-12	MIAMISBURG, OH FLGS AT LINDEN AVE
IN SERVICE: - -	DAYTON DISTRICT — FILE No. R-
	CADD or DWG. No. 82112183.NX1 — SHEET No. 1 of 1

REVISION INITIALS

PROPERTY
PENNSYLVANIA R.R.

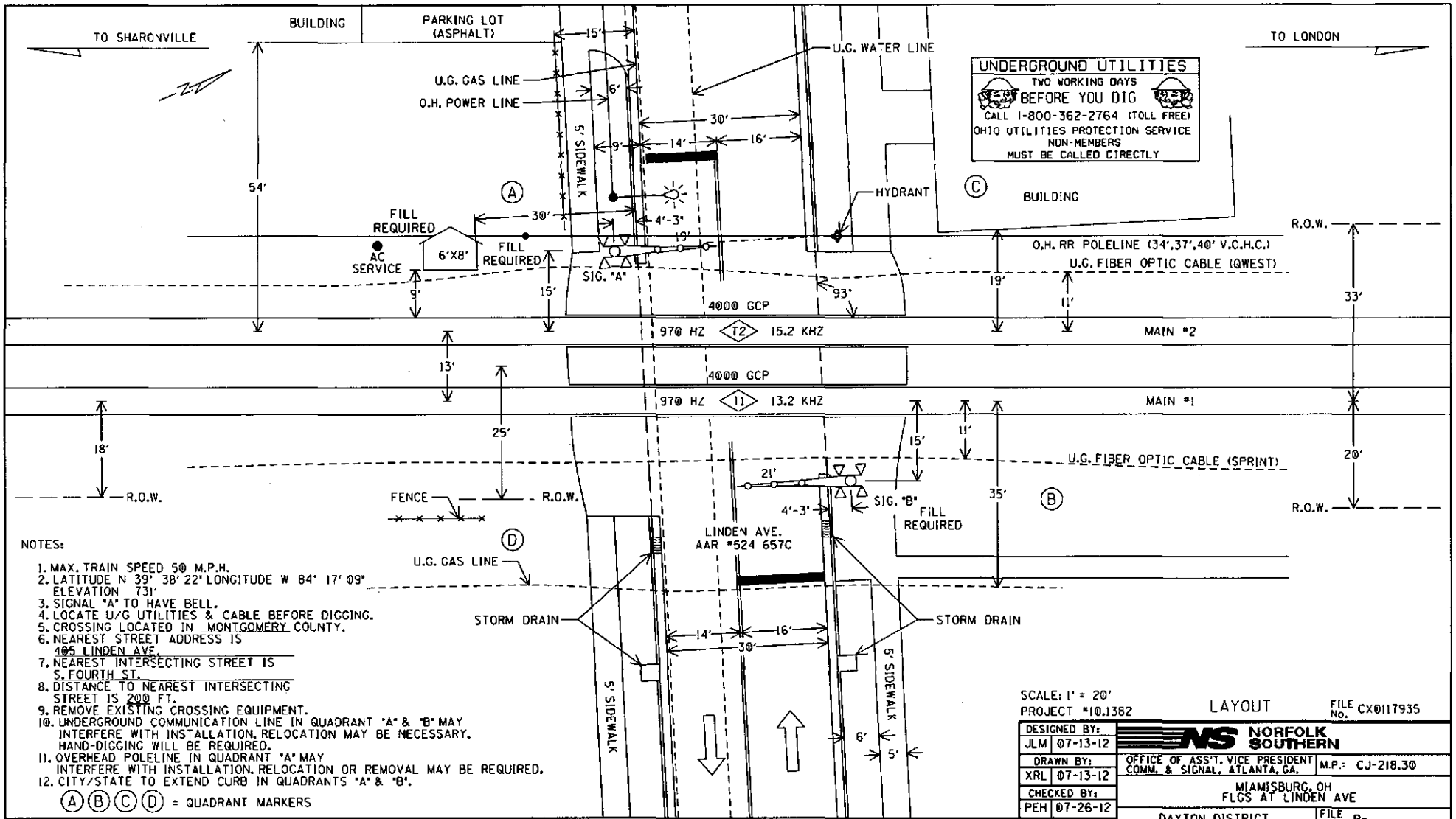

NOTES:

1. MAX. TRAIN SPEED 50 M.P.H.
2. LATITUDE N 39° 38' 22" LONGITUDE W 84° 17' 09"
   ELEVATION 731'
3. SIGNAL "A" TO HAVE BELL.
4. LOCATE U/G UTILITIES & CABLE BEFORE DIGGING.
5. CROSSING LOCATED IN MONTGOMERY COUNTY.
6. NEAREST STREET ADDRESS IS
   405 LINDEN AVE.
7. NEAREST INTERSECTING STREET IS
   S. FOURTH ST.
8. DISTANCE TO NEAREST INTERSECTING
   STREET IS 200 FT.
9. REMOVE EXISTING CROSSING EQUIPMENT.
10. UNDERGROUND COMMUNICATION LINE IN QUADRANT "A" & "B" MAY INTERFERE WITH INSTALLATION. RELOCATION MAY BE NECESSARY. HAND-DIGGING WILL BE REQUIRED.
11. OVERHEAD POLELINE IN QUADRANT "A" MAY INTERFERE WITH INSTALLATION. RELOCATION OR REMOVAL MAY BE REQUIRED.
12. CITY/STATE TO EXTEND CURB IN QUADRANTS "A" & "B".

(A)(B)(C)(D) = QUADRANT MARKERS

SCALE: 1" = 20'
PROJECT #10.1382

LAYOUT

FILE No. CX0117935

DESIGNED BY: JLM 07-13-12	NORFOLK SOUTHERN
DRAWN BY: XRL 07-13-12	OFFICE OF ASS'T. VICE PRESIDENT COMM. & SIGNAL, ATLANTA, GA. — M.P.: CJ-218.30
CHECKED BY: PEH 07-26-12	MIAMISBURG, OH FLCS AT LINDEN AVE
IN SERVICE: - -	DAYTON DISTRICT — FILE No. R-
	CADD or DWG. No. 82112183.01 — SHEET No. 1 of 24

REVISION INITIALS

PROPERTY
PENNSYLVANIA R.R.

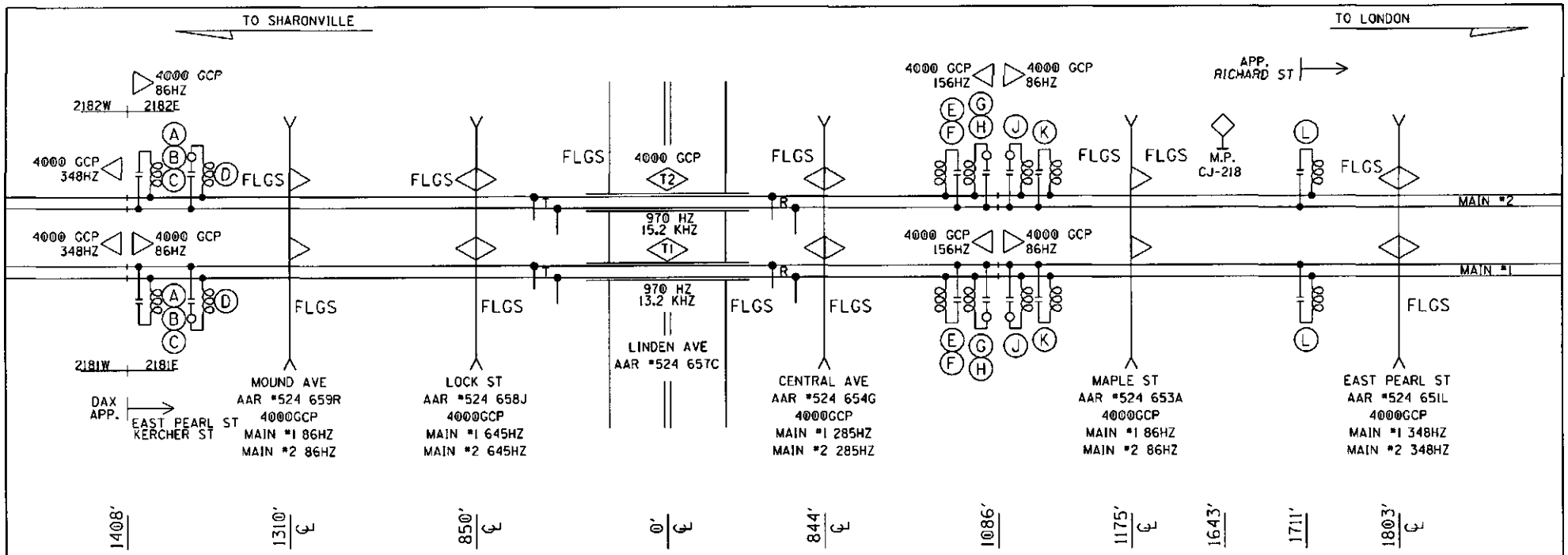

(A)- MF-NBS 62775-1543 (156HZ)

(B)- MF-NBS 62775-3497 (970HZ)

(C)- MF-NBS 62775-1543 (285HZ)

(D)- MF-NBS 62775-3497 (645HZ) W/8V617-1400

(E)- MF-NBS 62775-8621 (86HZ)

(F)- MF-NBS 62775-3497 (645HZ)

(G)- MF-NBS 62775-3497 (970HZ) W/8V617-0400

(H)- MF-NBS 62775-1543 (285HZ) W/8V617-2200

(J)- MF-NBS 62775-1543 (348HZ) W/8V617-2000

(K)- MF-NBS 62775-3497 (525HZ)

(L)- MF-NBS 62775-1543 (211HZ)

PROFILE

DESIGNED BY: JLM 07-13-12	NORFOLK SOUTHERN
DRAWN BY: XRL 07-13-12	OFFICE OF ASS'T. VICE PRESIDENT COMM. & SIGNAL, ATLANTA, GA. — M.P.: CJ-218.30
CHECKED BY: PEH 07-26-12	MIAMISBURG, OH FLGS AT LINDEN AVE
IN SERVICE: - -	DAYTON DISTRICT — FILE No. R-
	CADD or DWG. No. 82112183.02 — SHEET No. 2 of 24

REVISION INITIALS

PROPERTY PENNSYLVANIA R.R.

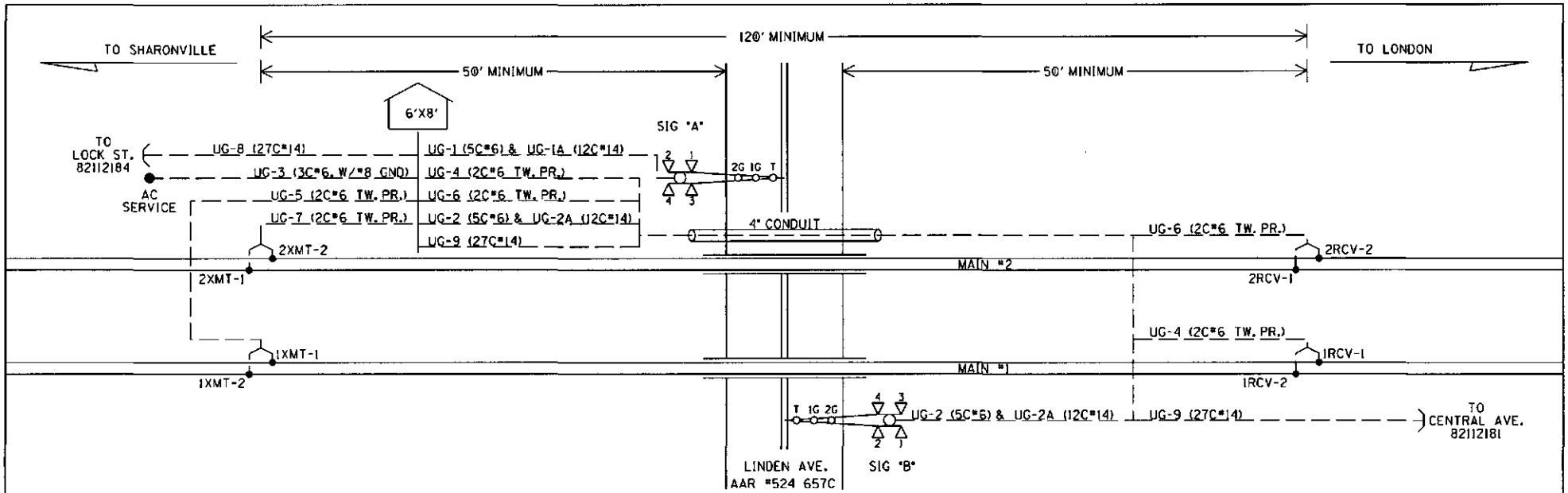

UG-1-5CUG #6
AEC
AEZ
AEB
B16-A
N16-A

UG-2-5CUG #6
BEC
BEZ
BEB
B16-B
N16-B

UG-1A-12CUG #14
AXG
NAXG
AXX
1AXX
XGP1
AMTSS
AGD
AGBX120
AGNX120
SPARE
SPARE
SPARE

UG-2A-12CUG #14
BXG
NBXG
BXX
1BXX
XGP1
XGP
BMTSS
BGD
BGBX120
BGNX120
SPARE
SPARE

UG-3-3CUG #6 W/#8 GND
BX120-A
BX120-B
NX120
GND

UG-4-TW. PR. #6
1RCV-1
1RCV-2

UG-5-TW. PR. #6
1XMT-1
1XMT-2

UG-6-TW. PR. #6
2RCV-1
2RCV-2

UG-7-TW. PR. #6
2XMT-1
2XMT-2

UG-8-27CUG #14
LIN-1WDAXP
NLIN-1WDAXP
LIN-2WDAXP
NLIN-2WDAXP
CEN-1WDAXP
NCEN-1WDAXP
CEN-2WDAXP
NCEN-2WDAXP
MAP-1WDAXP
NMAP-1WDAXP
MAP-2WDAXP
NMAP-2WDAXP
LOC-1EDAXP
NLOC-1EDAXP
LOC-2EDAXP
NLOC-2EDAXP
MOU-1EDAXP
NMOU-1EDAXP
MOU-2EDAXP
NMOU-2EDAXP
SPARE
SPARE
SPARE
SPARE
SPARE
SPARE
SPARE

UG-9-27CUG #14
LIN-1EDAXP
NLIN-1EDAXP
LIN-2EDAXP
NLIN-2EDAXP
CEN-1WDAXP
NCEN-1WDAXP
CEN-2WDAXP
NCEN-2WDAXP
MAP-1WDAXP
NMAP-1WDAXP
MAP-2WDAXP
NMAP-2WDAXP
LOC-1EDAXP
NLOC-1EDAXP
LOC-2EDAXP
NLOC-2EDAXP
MOU-1EDAXP
NMOU-1EDAXP
MOU-2EDAXP
NMOU-2EDAXP
SPARE
SPARE
SPARE
SPARE
SPARE
SPARE
SPARE

CABLE PLAN

DESIGNED BY: JLM 07-13-12	NORFOLK SOUTHERN		
DRAWN BY: XRL 07-13-12	OFFICE OF ASS'T. VICE PRESIDENT COMM. & SIGNAL, ATLANTA, GA.	M.P.: CJ-218.30	
CHECKED BY: PEH 07-26-12	MIAMISBURG, OH FLGS AT LINDEN AVE		
IN SERVICE: - -	DAYTON DISTRICT	FILE No. R-	
	CADD or DWG. No. 82112183.03	SHEET No. 3 of 24	

REVISION INITIALS

PROPERTY
PENNSYLVANIA R.R.

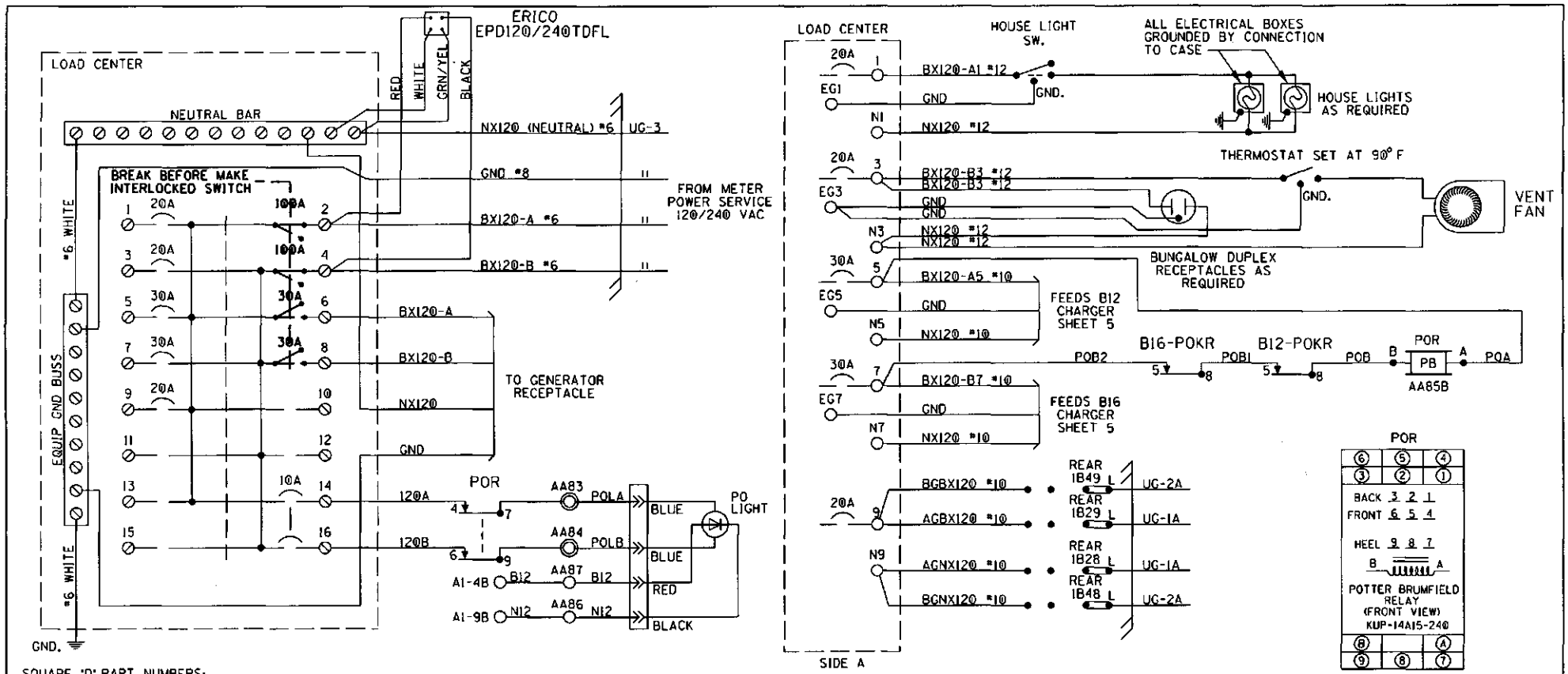

SQUARE 'D' PART NUMBERS:

LOAD CENTER——Q0116L125G
10A 1P CIR BKR——Q0110
10A 2P CIR BKR——Q0210
20A 1P CIR BKR——Q0120
30A 1P CIR BKR——Q0130
30A 2P CIR BKR——Q0230
60A 2P CIR BKR——Q0260
100A 2P CIR BKR——Q02100
MECH INTERLOCK——PK4DT1M4LA
GENERATOR RECEPTACLE:
MALE CONNECTOR - NEMA L1430-FI

NOTE:
ALL AC WIRING IS TO BE IN METALLIC CONDUIT WITH NO EXPOSED TERMINALS. ALL AC 120V AND 240V EQUIPMENT IS TO BE PROPERLY GROUNDED.

LOAD CENTER WIRING

DESIGNED BY: JLM 07-13-12	NORFOLK SOUTHERN	
DRAWN BY: XRL 07-13-12	OFFICE OF ASS'T. VICE PRESIDENT COMM. & SIGNAL, ATLANTA, GA.	M.P.: CJ-218.30
CHECKED BY: PEH 07-26-12	MIAMISBURG, OH FLGS AT LINDEN AVE	
IN SERVICE: - -	DAYTON DISTRICT	FILE No. R-
	CADD or DWG. No. 82112183.04	SHEET No. 4 of 24

REVISION INITIALS

PROPERTY
PENNSYLVANIA R.R.

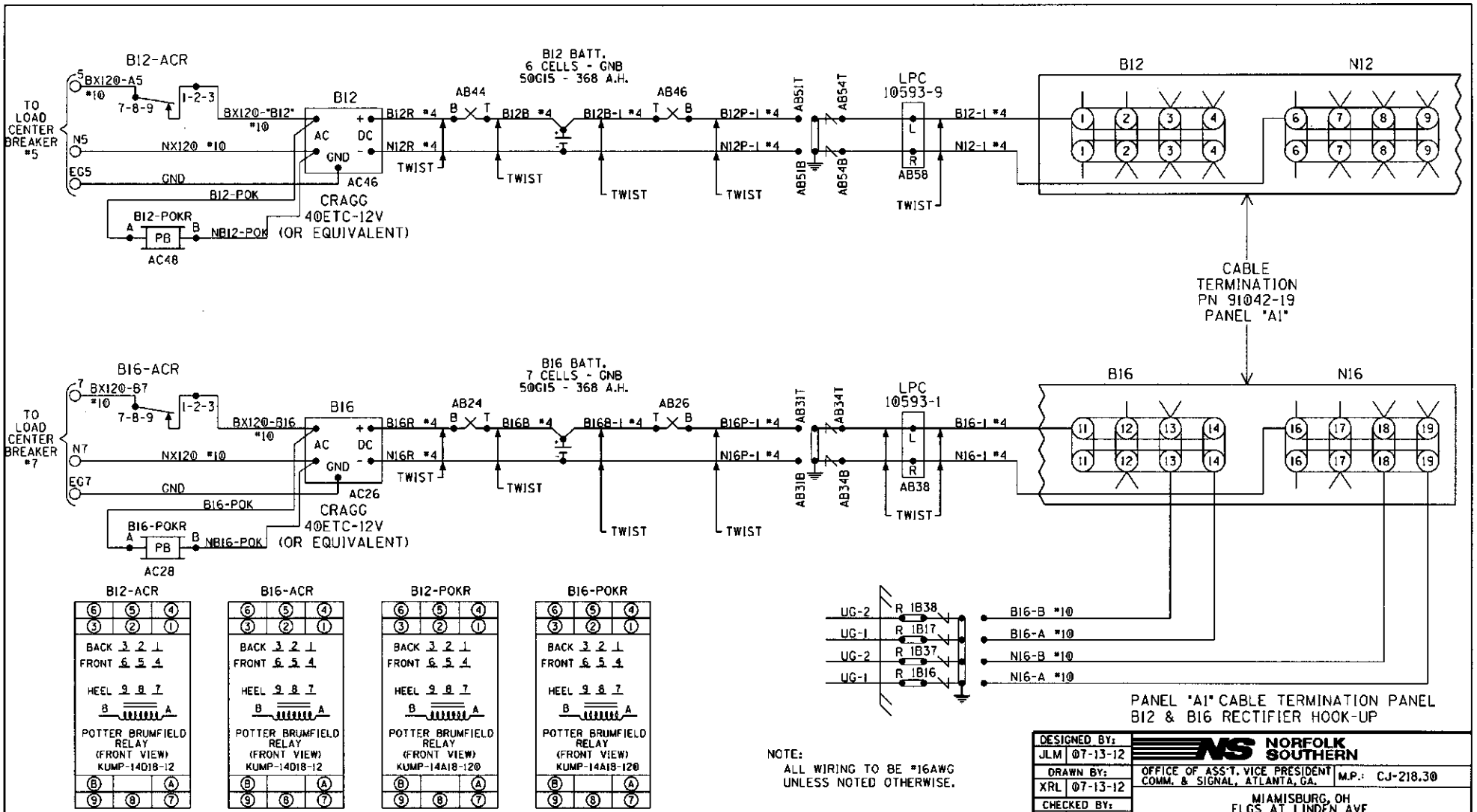
B12-ACR
TO LOAD CENTER BREAKER #5
5 BX120-A5 #10
7-8-9
1-2-3
BX120-"B12" #10
N5
NX120 #10
EG5
GND
B12-POK
B12-POKR
PB
AC48
NB12-POK
B12
AC
DC
GND
AC46
CRAGG 40ETC-12V (OR EQUIVALENT)
B12 BATT. 6 CELLS - GNB 50G15 - 368 A.H.
B12R #4
N12R #4
AB44
B12B #4
B12B-1 #4
AB46
B12P-1 #4
N12P-1 #4
TWIST
AB51T
AB51B
AB54T
AB54B
LPC 10593-9
AB58
B12-1 #4
N12-1 #4
B12
N12
CABLE TERMINATION PN 91042-19 PANEL "A1"
B16-ACR
TO LOAD CENTER BREAKER #7
7 BX120-B7 #10
BX120-B16 #10
N7
NX120 #10
EG7
GND
B16-POK
B16-POKR
AC28
NB16-POK
B16
AC26
CRAGG 40ETC-12V (OR EQUIVALENT)
B16 BATT. 7 CELLS - GNB 50G15 - 368 A.H.
B16R #4
N16R #4
AB24
B16B #4
B16B-1 #4
AB26
B16P-1 #4
N16P-1 #4
AB31T
AB31B
AB34T
AB34B
LPC 10593-1
AB38
B16-1 #4
N16-1 #4
B16
N16
B12-ACR
B16-ACR
B12-POKR
B16-POKR
BACK 3 2 1
FRONT 6 5 4
HEEL 9 8 7
POTTER BRUMFIELD RELAY (FRONT VIEW) KUMP-14D18-12
POTTER BRUMFIELD RELAY (FRONT VIEW) KUMP-14A18-120
UG-2 R 1B38
UG-1 R 1B17
UG-2 R 1B37
UG-1 R 1B16
B16-B #10
B16-A #10
N16-B #10
N16-A #10
PANEL "A1" CABLE TERMINATION PANEL
B12 & B16 RECTIFIER HOOK-UP
NOTE:
ALL WIRING TO BE #16AWG UNLESS NOTED OTHERWISE.
DESIGNED BY: JLM 07-13-12
DRAWN BY: XRL 07-13-12
CHECKED BY: PEH 07-26-12
IN SERVICE: - -
NORFOLK SOUTHERN
OFFICE OF ASS'T. VICE PRESIDENT COMM. & SIGNAL, ATLANTA, GA.
M.P.: CJ-218.30
MIAMISBURG, OH
FLGS AT LINDEN AVE
DAYTON DISTRICT
FILE No. R-
CADD or DWG. No. 82112183.05
SHEET No. 5 of 24
REVISION INITIALS
PROPERTY
PENNSYLVANIA R.R.

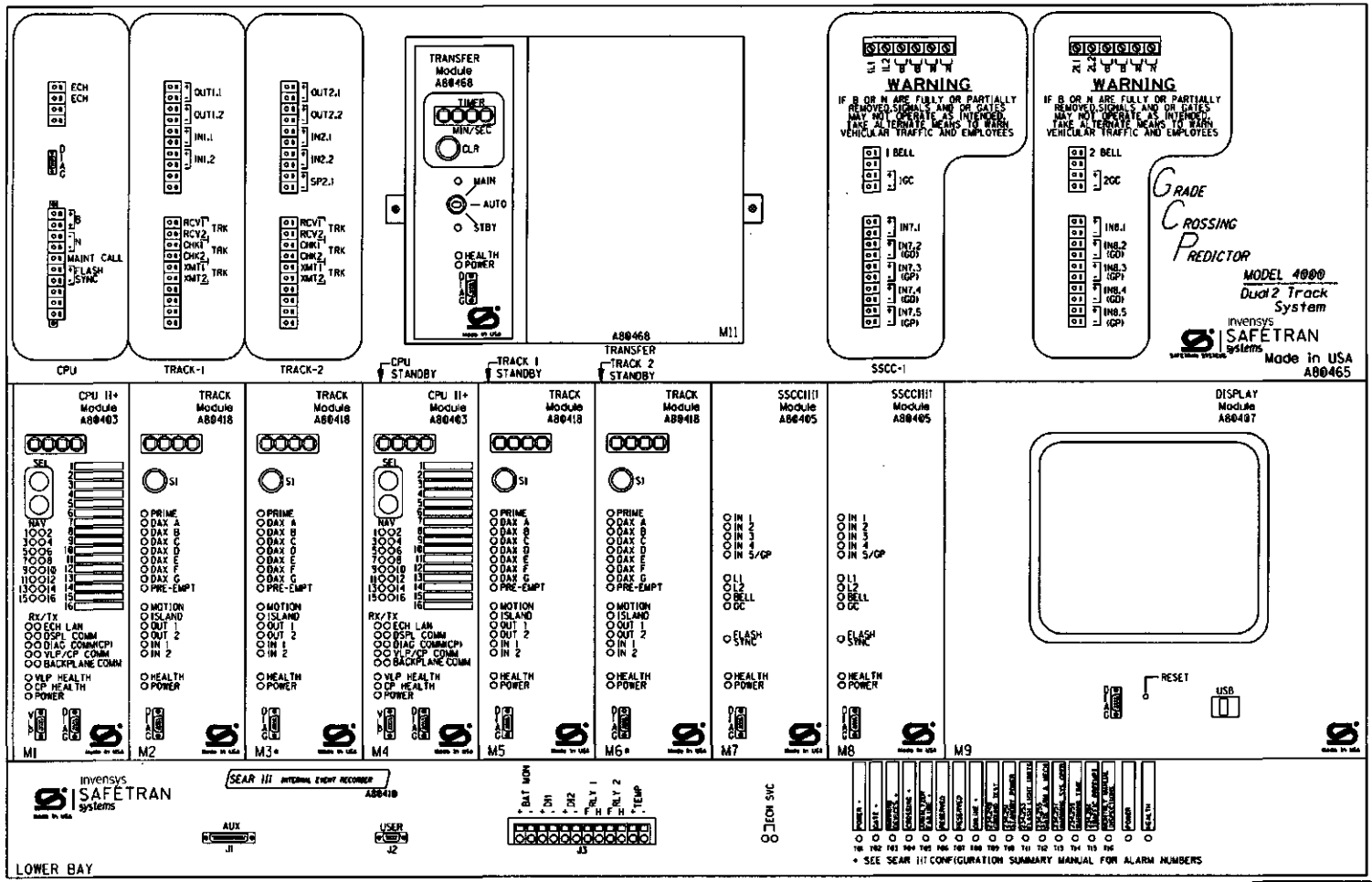

WARNING

REMOVAL OF THE SSCCIIII MODULE WILL CAUSE THE GATE(S) TO DROP BUT THE LIGHTS WILL NOT ACTIVATE

CAUTION

ASSURE CORRECT POLARITY OF THE SSCCIIII MODULE OR SEVERE DAMAGE WILL OCCUR.

ATTENTION!

ENSURE THE DISPLAY MODULE HEATER IS DISABLED. LEAVING THE DISPLAY HEATER ENABLED WILL REDUCE THE AMOUNT OF BATTERY STANDBY TIME IN THE EVENT OF AN AC POWER FAILURE.

HEATER FUNCTION IS JUMPER SELECTABLE ON THE DISPLAY MODULE BOARD.
THREE OPTIONS ARE AVAILABLE:
NORMAL LCD HTR (DEFAULT)
HI CURRENT
NO JUMPER (HEATER DISABLED)

*= MAIN AND STANDBY MAY USE RIO IN TRACK 2 SLOTS (M3 AND M6)

PANEL 'A2' 4000 GCP REDUNDANT
2-TK CHASSIS AND MODULE LAYOUT

DESIGNED BY: JLM 07-13-12	NORFOLK SOUTHERN		
DRAWN BY: XRL 07-13-12	OFFICE OF ASS'T. VICE PRESIDENT COMM. & SIGNAL, ATLANTA, GA.	M.P.: CJ-218.30	
CHECKED BY: PEH 07-26-12	MIAMISBURG, OH FLGS AT LINDEN AVE		
IN SERVICE: - -	DAYTON DISTRICT	FILE No. R-	
	CADD or DWG. No. 82112183.06	SHEET No. 6 of 24	

REVISION INITIALS

PROPERTY
PENNSYLVANIA R.R.

Program Report

Location and SIN

DOT Number: 524657C
Milepost Number: CJ-218.30
Site Name: LINDEN AVE

SIN: 755023404416

MCF and Template Selection

MCF Name: GCP-T6X-02-1.mcf
MCF Revision: 021
MCFCRC: 6076E435

Template = 1A:6 Trk Bi

Check Numbers

Office Check No. (DT 4.6.0): 40EAE95C
Office Check Number: 40EAE95C
Config. Check Number: 6B9F2979
(Based on MCF Revision 021)

Program

BASIC: module configuration
Track 1 Slot = Track
Track 2/RIO 1 Slot = Track
Track 3 Slot = Not Used
Track 4 Slot = Not Used
Track 5/RIO 2 Slot = Not Used
Track 6/RIO 3 Slot = Not Used
SSCC-1 Slot = SSCC3i
SSCC-2 Slot = SSCC3i
SEAR Used = Yes

BASIC: MS/GCP operation
Track 1 : MS/GCP Operation = Yes
Track 2 : MS/GCP Operation = Yes

BASIC: island operation
Track 1 : Island Used = Internal
Track 2 : Island Used = Internal

BASIC: preemption
Preempt Logic = No

BASIC: radio Dax links
Radio DAX link A Used = No
Radio DAX link B Used = No

BASIC: Vital Comms links
Vital Comms link 1 Used = No
Vital Comms link 2 Used = No

PREDICTORS: track 1
Track 1 : Prime Used = Yes
Track 1 : Dax A Used = No
Track 1 : Dax B Used = No
Track 1 : Dax C Used = No
Track 1 : Dax D Used = No
Track 1 : Dax E Used = No
Track 1 : Dax F Used = No
Track 1 : Dax G Used = No

PREDICTORS: track 2
Track 2 : Prime Used = Yes
Track 2 : Dax A Used = No
Track 2 : Dax B Used = No
Track 2 : Dax C Used = No
Track 2 : Dax D Used = No
Track 2 : Dax E Used = No
Track 2 : Dax F Used = No
Track 2 : Dax G Used = No

GCP: track 1
Track 1 : GCP Freq Category = Standard
Track 1 : GCP Frequency = 970 Hz
Track 1 : Approach Distance = 1326 ft
Track 1 : Uni/Bi/Sim-Bidirnl = Bidirnl
Track 1 : GCP Transmit Level = High
Track 1 : Island Connection = Isl1
Track 1 : Island Distance = 163 ft
Track 1 : Computed Distance = 9999 ft
Track 1 : Linearization Steps = 100

GCP: track 1 enhanced det
Track 1 : Inbound PS Sensitivity = Off
Track 1 : Speed Limiting Used = Yes
Track 1 : Outbound False Act Lvl = Normal
Track 1 : Outbound PS Timer = 20 sec
Track 1 : Trailing Switch Logic = On
Track 1 : Post Joint Detn Time = 15 sec
Track 1 : Adv Appr Predn = No
Track 1 : Cancel Pickup Delay = This Isl

GCP: track 1 prime
Track 1 : Prime Warning Time = 30 sec
Track 1 : Prime Offset Distance = 0 ft
Track 1 : Switch MS EZ Level = 10
Track 1 : Prime MS/GCP Mode = Pred
Track 1 : Prime Pickup Delay = 15 sec
Track 1 : Prime UAX = IP
Track 1 : Prime UAX Pickup = 25 sec

GCP: track 1 pos start
Track 1 : Positive Start = Off
Track 1 : Sudden Shnt Det Used = No
Track 1 : Low EZ Detection Used = No

GCP: track 1 MS Control
Track 1 : MS/GCP Ctrl IP Used = No
Track 1 : MS Sensitivity Level = 0
Track 1 : Compensation Level = 1300
Track 1 : Warn Time-Ballast Comp = High
Track 1 : Low EX Adjustment = 39
Track 1 : Bidirn Dax Passthru = No
Track 1 : False Act on Train Stop = No
Track 1 : EX Limiting Used = Yes
Track 1 : EZ Correction Used = Yes

GCP: track 2
Track 2 : GCP Freq Category = Standard
Track 2 : GCP Frequency = 970 Hz
Track 2 : Approach Distance = 1326 ft
Track 2 : Uni/Bi/Sim-Bidirnl = Bidirnl
Track 2 : GCP Transmit Level = High
Track 2 : Island Connection = Isl2
Track 2 : Island Distance = 163 ft
Track 2 : Computed Distance = 9999 ft
Track 2 : Linearization Steps = 100

GCP: track 2 enhanced det
Track 2 : Inbound PS Sensitivity = Off
Track 2 : Speed Limiting Used = Yes
Track 2 : Outbound False Act Lvl = Normal
Track 2 : Outbound PS Timer = 20 sec
Track 2 : Trailing Switch Logic = On
Track 2 : Post Joint Detn Time = 15 sec
Track 2 : Adv Appr Predn = No
Track 2 : Cancel Pickup Delay = This Isl

GCP: track 2 prime
Track 2 : Prime Warning Time = 30 sec
Track 2 : Prime Offset Distance = 0 ft
Track 2 : Switch MS EZ Level = 10
Track 2 : Prime MS/GCP Mode = Pred
Track 2 : Prime Pickup Delay = 15 sec
Track 2 : Prime UAX = IP
Track 2 : Prime UAX Pickup = 25 sec

GCP: track 2 pos start
Track 2 : Positive Start = Off
Track 2 : Sudden Shnt Det Used = No
Track 2 : Low EZ Detection Used = No

GCP: track 2 MS Control
Track 2 : MS/GCP Ctrl IP Used = No
Track 2 : MS Sensitivity Level = 0
Track 2 : Compensation Level = 1300
Track 2 : Warn Time-Ballast Comp = High
Track 2 : Low EX Adjustment = 39
Track 2 : Bidirn Dax Passthru = No
Track 2 : False Act on Train Stop = No
Track 2 : EX Limiting Used = Yes
Track 2 : EZ Correction Used = Yes

ISLAND: track 1
Track 1 : Isl Frequency = 13.2 kHz
Track 1 : Pickup Delay (2s +) = 0 sec
Track 1 : Isl Enable IP Used = No

ISLAND: track 2
Track 2 : Isl Frequency = 15.2 kHz
Track 2 : Pickup Delay (2s +) = 0 sec
Track 2 : Isl Enable IP Used = No

AND: track Anding
AND 1 XR Used = Yes
AND 2 Used = No
AND 3 Used = No
AND 4 Used = No
AND 5 Used = No
AND 6 Used = No
AND 7 Used = No
AND 8 Used = No

AND: AND 1 XR
AND 1 XR Track 1 = Prime
AND 1 XR Track 2 = Prime
AND 1 Enable Used = Yes
And 1 Enable Pickup = 5 sec
AND 1 Enable Drop = 0 sec
AND 1 Wrap Used = No

ADVANCED: MS restart
MS/GCP Restart Used = No

ADVANCED: out of service
OOS Control = Display+OOS IPs
OOS Timeout = Yes
OOS Timeout = 1 hrs

ADVANCED: out of service 2
T1 OOS Control = OOS Input 1
T2 OOS Control = OOS Input 1

ADVANCED: track wrap circuits
Wrap LOS Timer = 5 sec
Track 1 Wrap Used = No
Track 2 Wrap Used = No

ADVANCED: trk 1 overrides
Track 1 : All Predictors Override Used = No

ADVANCED: trk 2 overrides
Track 2 : All Predictors Override Used = No

4000 GCP PROGRAMMING SETUP

DESIGNED BY: JLM 07-13-12	NORFOLK SOUTHERN		
DRAWN BY: XRL 07-13-12	OFFICE OF ASS'T. VICE PRESIDENT COMM. & SIGNAL, ATLANTA, GA.	M.P.: CJ-218.30	
CHECKED BY: PEH 07-26-12	MIAMISBURG, OH FLGS AT LINDEN AVE		
IN SERVICE: - -	DAYTON DISTRICT	FILE No. R-	
	CADD or DWG. No. 82112183.07	SHEET No. 7 of 24	

REVISION INITIALS

PROPERTY
PENNSYLVANIA R.R.

ADVANCED: OR logic
OR 1 Used = No
OR 2 Used = No
OR 3 Used = No
OR 4 Used = No

ADVANCED: internal I/O 1
Pass Thrus = No
Int.1 Sets = Not Used
Int.1 Set by = Not Used
Int.2 Sets = Not Used
Int.2 Set by = Not Used
Int.3 Sets = Not Used
Int.3 Set by = Not Used
Int.4 Sets = Not Used
Int.4 Set by = Not Used

ADVANCED: Internal I/O 2
Int.5 Sets = Not Used
Int.5 Set by = Not Used
Int.6 Sets = Not Used
Int.6 Set by = Not Used
Int.7 Sets = Not Used
Int.7 Set by = Not Used
Int.8 Sets = Not Used
Int.8 Set by = Not Used

ADVANCED: internal I/O 3
Int.9 Sets = Not Used
Int.9 Set by = Not Used
Int.10 Sets = Not Used
Int.10 Set by = Not Used
Int.11 Sets = Not Used
Int.11 Set by = Not Used
Int.12 Sets = Not Used
Int.12 Set by = Not Used

ADVANCED: Internal I/O 4
Int.13 Sets = Not Used
Int.13 Set by = Not Used
Int.14 Sets = Not Used
Int.14 Set by = Not Used
Int.15 Sets = Not Used
Int.15 Set by = Not Used
Int.16 Sets = Not Used
Int.16 Set by = Not Used

ADVANCED: site options
Daylight Savings = On
Units = Standard
Maint CallRpt IP Used = No
Emergency Activate IP = No
EZ/EX Logging = Change
EZ/EX Point Change = 3

SSCC
Gates Used = Yes
SSCCI+2 GPs Coupled = Yes
Min Activation = 0 sec
Rmt Activation Cancel= 2 min
BellOn Gate Rising = No
Mute BellOn Gate Down = No
SSCCIV Controller Used = No

SSCC: 1
SSCC-1 Activation = AND 1 XR
SSCC-1 Gate Delay = 4 sec
SSCC-1 Number of GPs = 1
SSCC-1 Number of GDs = 2
SSCC 1 : Flash Rate = 40
SSCC 1 : Low Battery Detection = No
SSCC 1 : Flash Sync = master
SSCC 1 : Invert Gate Output = No
SSCC 1 : Lamp NeutralTest = On
Aux-1 Xng CtrlUsed = No

SSCC: 2
SSCC-2 Activation = AND 1 XR
SSCC-2 Gate Delay = 4 sec
SSCC-2 Number of GPs = 0
SSCC-2 Number of GDs = 0
SSCC 2 : Flash Rate = 40
SSCC 2 : Low Battery Detection = No
SSCC 2 : Flash Sync = slave
SSCC 2 : Invert Gate Output = No
SSCC 2 : Lamp NeutralTest = On
Aux-2 Xng CtrlUsed = No

OUTPUT: assignment page 1
OUT 1.1 = Not Used
OUT 1.2 = Not Used
OUT 2.1 = Not Used
OUT 2.2 = Not Used

INPUT: assignment page 1
IN 1.1 = T1 Prime UAX
IN 1.2 = Not Used
IN 2.1 = T2 Prime UAX
IN 2.2 = Not Used

IO: assignment SSCC
OUT GC 1 = Gate Output 1
OUT GC 2 = Gate Output 2
IN 7.1 = Not Used
IN 7.2 = GD 1.2
IN 7.3 = AND 1 XR Enable
IN 7.4 = GD 1.1
IN 7.5 = GP 1.1
IN 8.1 = Not Used
IN 8.2 = Out Of Service IP 1
IN 8.3 = Not Used
IN 8.4 = Not Used
IN 8.5 = Not Used

SEAR
SEAR Subnode = 3
DI 1 = Gnd Flt Tester 1
DI 2 = Not Used
Rly 1 = Ground Fault Test
Rly 2 = AC Control

SEAR: inputs
SP 2.1 = POK 1
SP 3.1 = Not Used
SP 4.1 = Not Used
SP 5.1 = Not Used
SP 6.1 = Not Used

SEAR: slot 1-4 inputs
IN 1.2 = Not Used
IN 2.2 = Not Used
IN 3.1 = Not Used
IN 3.2 = Not Used
IN 4.1 = Not Used
IN 4.2 = Not Used

SEAR: inputs slot 5
IN 5.1 = Not Used
IN 5.2 = Not Used

SEAR: inputs slot 6
IN 6.1 = Not Used
IN 6.2 = Not Used

SEAR: slot 7-8 inputs
IN 7.1 = TSS 1
IN 8.1 = TSS 2
IN 8.3 = POK 2
IN 8.4 = Not Used
IN 8.5 = Not Used

SITE: programming
Radio Subnode = 1
Field Password = Off
Low Battery Enabled = Off

Configuration Package File

Filename: 82112183.pac

4000 GCP PROGRAMMING SETUP

DESIGNED BY: JLM 07-13-12	NORFOLK SOUTHERN		
DRAWN BY: XRL 07-13-12	OFFICE OF ASS'T. VICE PRESIDENT COMM. & SIGNAL, ATLANTA, GA.	M.P.: CJ-218.30	
CHECKED BY: PEH 07-26-12	MIAMISBURG, OH FLGS AT LINDEN AVE		
IN SERVICE: - -	DAYTON DISTRICT	FILE No. R-	
	CADD or DWG. No. 82112183.08	SHEET No. 8 of 24	

REVISION INITIALS

PROPERTY
PENNSYLVANIA R.R.

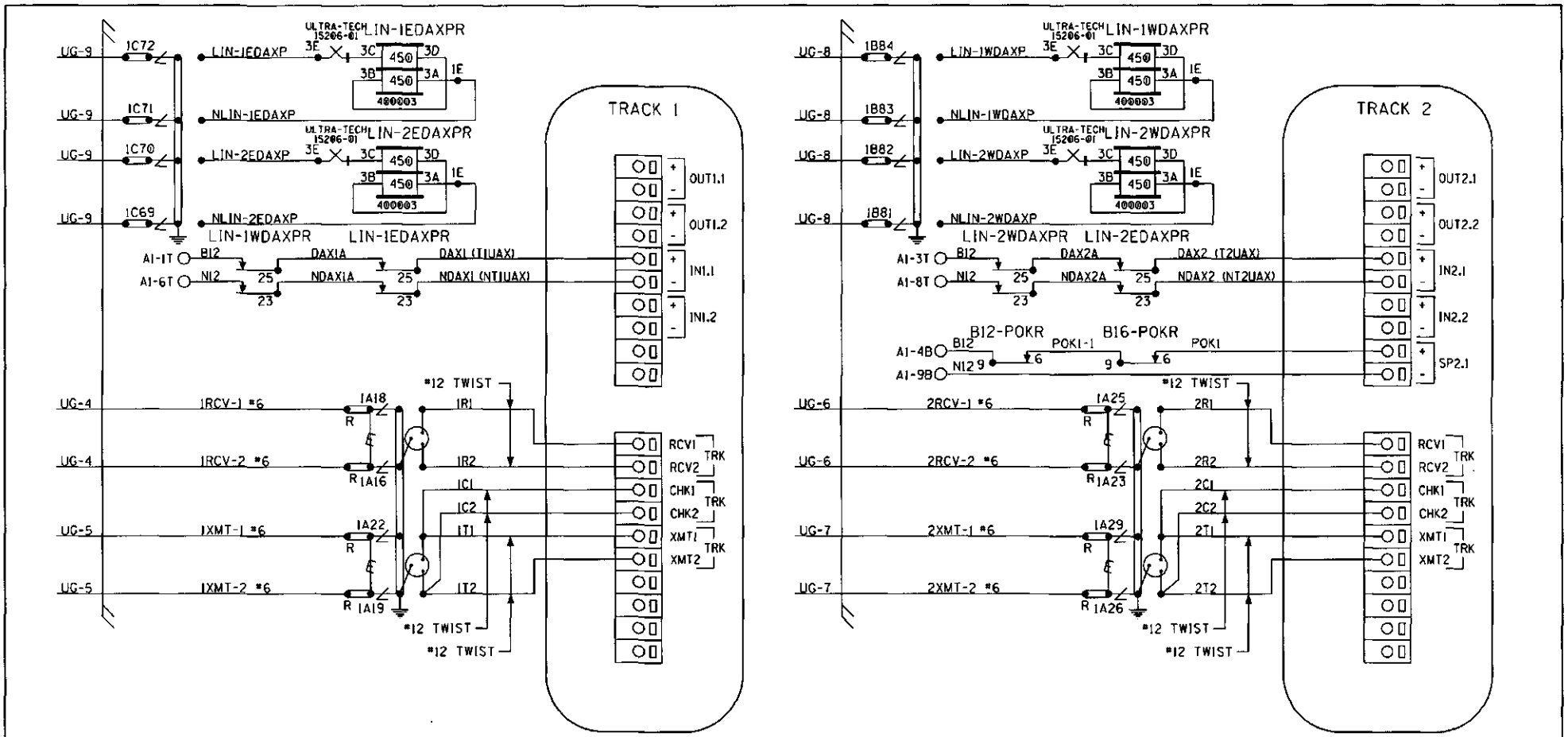

PANEL "A2" CONNECTORS FOR MODULES (A80418)

NOTE:
ALL WIRING TO BE #16AWG
UNLESS NOTED OTHERWISE.

DESIGNED BY: JLM 07-13-12	NORFOLK SOUTHERN		
DRAWN BY: XRL 07-13-12	OFFICE OF ASS'T. VICE PRESIDENT COMM. & SIGNAL, ATLANTA, GA.	M.P.: CJ-218.30	
CHECKED BY: PEH 07-26-12	MIAMISBURG, OH FLGS AT LINDEN AVE		
IN SERVICE: - -	DAYTON DISTRICT	FILE No. R-	
	CADD or DWG. No. 82112183.09	SHEET No. 9 of 24	

REVISION INITIALS

PROPERTY
PENNSYLVANIA R.R.

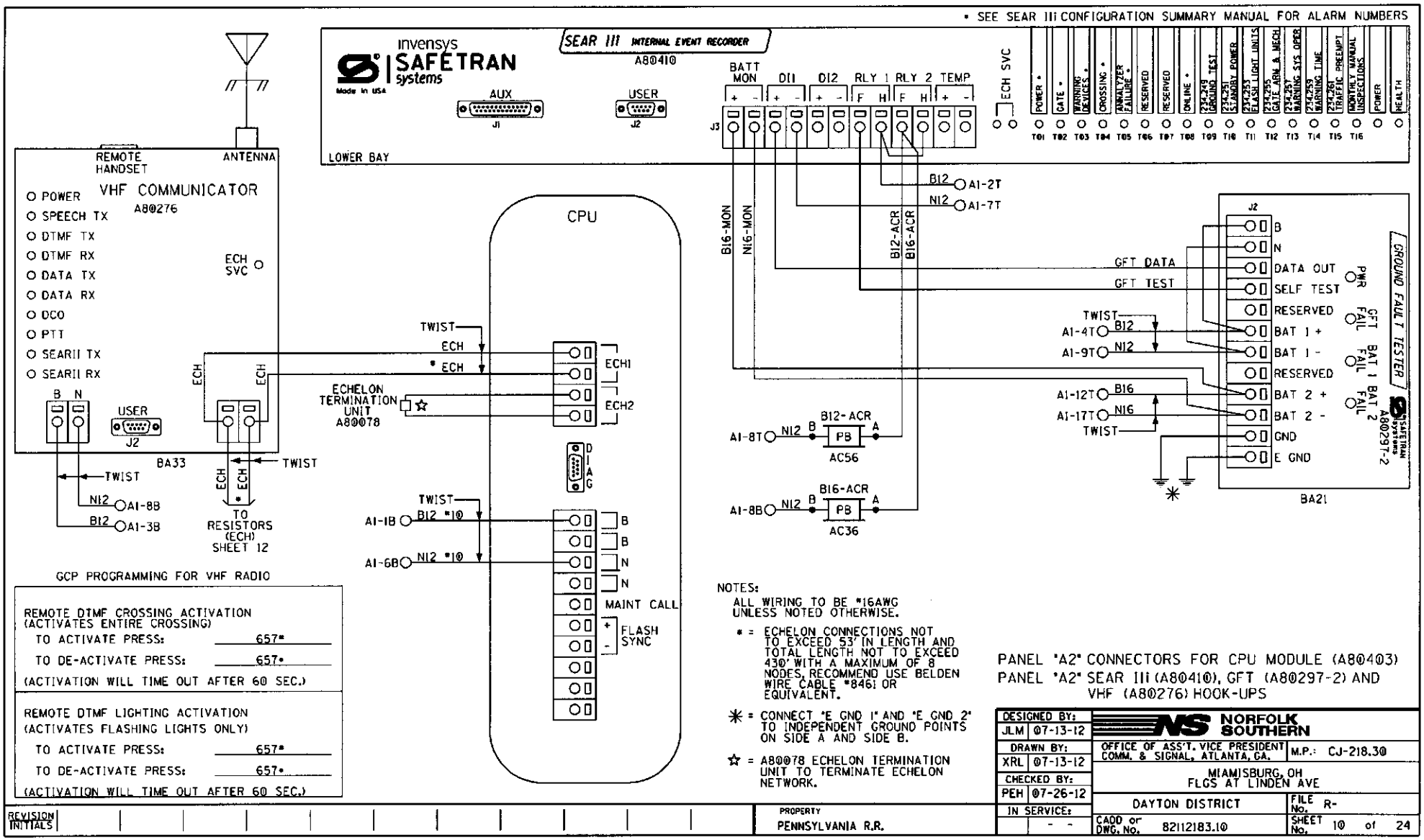
* SEE SEAR III CONFIGURATION SUMMARY MANUAL FOR ALARM NUMBERS
invensys SAFETRAN systems
Made in USA
SEAR III INTERNAL EVENT RECORDER
A80410
AUX
J1
USER
J2
BATT MON
DI1
DI2
RLY 1
RLY 2
TEMP
J3
ECH SVC
POWER *
GATE *
WARNING DEVICES *
CROSSING *
ANALYZER FAILURE *
RESERVED
RESERVED
ONLINE *
234.249 GROUND TEST
234.251 LAMPS/L POWER
234.253 FLASH LIGHT UNITS
234.255 GATE ARM & MECH
234.257 WARNING SYS OPER
234.259 WARNING TIME
234.261 TRAFFIC PREEMPT
MONTHLY MANUAL INSPECTIONS
POWER
HEALTH
T01 T02 T03 T04 T05 T06 T07 T08 T09 T10 T11 T12 T13 T14 T15 T16
LOWER BAY
REMOTE HANDSET
ANTENNA
VHF COMMUNICATOR
A80276
POWER
SPEECH TX
DTMF TX
DTMF RX
DATA TX
DATA RX
DCO
PTT
SEARII TX
SEARII RX
ECH SVC
B
N
USER
J2
BA33
TWIST
N12
A1-8B
B12
A1-3B
ECH
ECH
TO RESISTORS (ECH) SHEET 12
CPU
TWIST
ECH
* ECH
ECHELON TERMINATION UNIT A80078
ECH1
ECH2
DIAG
TWIST
A1-1B
B12 *10
A1-6B
N12 *10
B
B
N
N
MAINT CALL
FLASH SYNC
B16-MON
N16-MON
B12-ACR
B16-ACR
B12
A1-2T
N12
A1-7T
A1-8T
N12
B12-ACR
PB
AC56
A1-8B
N12
B16-ACR
PB
AC36
J2
B
N
DATA OUT
SELF TEST
RESERVED
BAT 1 +
BAT 1 -
RESERVED
BAT 2 +
BAT 2 -
GND
E GND
GFT DATA
GFT TEST
TWIST
A1-4T
B12
A1-9T
N12
A1-12T
B16
A1-17T
N16
TWIST
PWR
GFT FAIL
BAT 1 FAIL
BAT 2 FAIL
GROUND FAULT TESTER
A80297-2
BA21
GCP PROGRAMMING FOR VHF RADIO
REMOTE DTMF CROSSING ACTIVATION
(ACTIVATES ENTIRE CROSSING)
TO ACTIVATE PRESS: 657*
TO DE-ACTIVATE PRESS: 657*
(ACTIVATION WILL TIME OUT AFTER 60 SEC.)
REMOTE DTMF LIGHTING ACTIVATION
(ACTIVATES FLASHING LIGHTS ONLY)
TO ACTIVATE PRESS: 657*
TO DE-ACTIVATE PRESS: 657*
(ACTIVATION WILL TIME OUT AFTER 60 SEC.)
NOTES:
ALL WIRING TO BE #16AWG UNLESS NOTED OTHERWISE.
* = ECHELON CONNECTIONS NOT TO EXCEED 53' IN LENGTH AND TOTAL LENGTH NOT TO EXCEED 430' WITH A MAXIMUM OF 8 NODES, RECOMMEND USE BELDEN WIRE CABLE #8461 OR EQUIVALENT.
✳ = CONNECT "E GND 1" AND "E GND 2" TO INDEPENDENT GROUND POINTS ON SIDE A AND SIDE B.
☆ = A80078 ECHELON TERMINATION UNIT TO TERMINATE ECHELON NETWORK.
PANEL "A2" CONNECTORS FOR CPU MODULE (A80403)
PANEL "A2" SEAR III (A80410), GFT (A80297-2) AND VHF (A80276) HOOK-UPS
DESIGNED BY: JLM 07-13-12
DRAWN BY: XRL 07-13-12
CHECKED BY: PEH 07-26-12
IN SERVICE: - -
NORFOLK SOUTHERN
OFFICE OF ASS'T. VICE PRESIDENT COMM. & SIGNAL, ATLANTA, GA.
M.P.: CJ-218.30
MIAMISBURG, OH
FLGS AT LINDEN AVE
DAYTON DISTRICT
FILE No. R-
CADD or DWG. No. 82112183.10
SHEET No. 10 of 24
REVISION INITIALS
PROPERTY
PENNSYLVANIA R.R.

TO CONFIGURE SEAR III PRESS SITE SETUP KEY.
USE ARROW KEYS TO MAKE SELECTION.
PRESS ENTER AFTER SELECTION HAS BEEN MADE.

	SITE SET UP PROCEDURE	
	FUNCTION	LED DISPLAY
	DATE/TIME	
	AUTOMATIC DST ADJUSTMENT	YES
	TIME ZONE	EST
	SITE NAME	LINDEN AVE.
	MILEPOST	CJ-218.30
	DOT #	524657C
	TESTER TYPE	CROSSING
	DATE FORMAT	MM-DD-YYYY
	TEMP FORMAT	FAHRENHEIT
	INDICATE HOLD (SEC)	0
	INDICATE REFRESH (SEC)	60 550 234 043
	SITE ATCS	7.550.234.044.03.01
	SITE TYPE	NO COMMUNICATION
***	OFFICE ATCS ADDRESS	2.550.00.0000
***	PRIMARY HOP ADDR	7.RRR.LLL.GGG.XX.XX
***	BACKUP HOP ADDR 1	7.RRR.LLL.GGG.XX.XX
***	BACKUP HOP ADDR 2	7.RRR.LLL.GGG.XX.XX
***	POLL ID	1
***	MODE	GEN/ATCS
***	WAMS XID	DISABLED
***	OFFICE COMM DEVICE	MCM (ECHELON)
***	RADIO ATCS ADDR	7.RRR.LLL.GGG.01.01
***	PHONE #	(OFFICE NUMBER)
***	INIT STRING	
***	FIELD COMM	NONE
****	USER PORT	BAUD 57600, N, 8, 1, NONE
****	AUX PORT	BAUD 9600, N, 8, 1, NONE

VERIFY NUMBER OF BULBS: SENSOR #1	
CURR 1: LAMP SET UP	4 BULBS
CURR 2: LAMP SET UP	4 BULBS

VERIFY NUMBER OF BULBS: SENSOR #2	
CURR 1: LAMP SET UP	4 BULBS
CURR 2: LAMP SET UP	4 BULBS

	CONTROL SYSTEM CONFIGURATION MENU QUESTIONS	
	THE QUESTION	SELECT FROM MENU OPTION
	RESET NAMES AND MODULES?	YES
	RAILROAD NUMBER	550
	CROSSING CONFIGURATION	NORMAL
	AND 1 USED AS XR?	YES
	AND 2 USED AS XR?	NO
	AND 3 USED AS XR?	NO
	AND 4 USED AS XR?	NO
	AND 5 USED AS XR?	NO
	AND 6 USED AS XR?	NO
	AND 7 USED AS XR?	NO
	AND 8 USED AS XR?	NO
*	XR CONTROLLED BY FOREIGN RR	
	ENTRANCE GATES	2
*	GATES CONTROLLED BY FOREIGN RR	
	GATE POSITION FAIL TIME (SECONDS)	20
	BATTERY BANKS	2
	BATTERY MON USED	YES
	INTERNAL CROSSING CONTROLLERS	2
	EXTERNAL CROSSING CONTROLLERS	0
	VHF COMMUNICATOR	YES
	DTMF ACTIVATION	YES
*****	ACTIVATION CODE	657
	ACTIVATION TIMEOUT (SECONDS)	60
	ILOD MODULES	2
	ANY LED BULBS USED	NO
	AUTO INSPECTIONS	NO
	BELL SENSORS	1
**	BELL SENSOR TSS1	YES
**	BELL SENSOR TSS2	NO
**	BELL SENSOR TSS3	NO
**	BELL SENSOR TSS4	NO
**	BELL SENSOR TSS5	NO
**	BELL SENSOR TSS6	NO
**	BELL SENSOR TSS7	NO
**	BELL SENSOR TSS8	NO

CONTROL SYSTEM CONFIGURATION MENU QUESTIONS (CONT.)	
BELL ON	GATES LOWERING
GFT'S	YES
BATTERIES ON GFTI	2
GATE TIP SENSORS	YES
RTU	NO
VHF VOICE CHANNEL	2
VHF DATA CHANNEL	2
USE CELL MODEM NON-CRITICAL FEATURE	NO
FULL APPROACH MOVES ALARM	ACTIVATE

PROGRAM MENU QUESTIONS	PROGRAM
EDIT DIGITAL INPUTS	NO
EDIT BATTERIES	NO
EDIT RELAYS	NO
EDIT INDICATOR LEDS	NO
EDIT TEST LEDS	NO
EDIT ILOD SENSORS	NO
EDIT VHF SETTINGS	NO
GCP4K ATCS SUBNODE	16

NOTES:

* = DISPLAYED IF CROSSING CONFIGURATION IS SPLIT GATE

** = OPTIONS: IF BELL SENSOR = 0, THEN BELL FIELDS ARE NOT USED.

*** = IF SITE TYPE = NO COMMUNICATION, THEN THESE OPTIONS ARE NOT DISPLAYED

**** = THESE SETTINGS SHOULD BE LEFT AT THE DEFAULT SETTING.

***** = USE LAST 3 NUMBERS FROM DOT NUMBER

SEAR III PROGRAMMING SETUP

DESIGNED BY: JLM 07-13-12	NORFOLK SOUTHERN	
DRAWN BY: XRL 07-13-12	OFFICE OF ASS'T. VICE PRESIDENT COMM. & SIGNAL, ATLANTA, GA.	M.P.: CJ-218.30
CHECKED BY: PEH 07-26-12	MIAMISBURG, OH FLGS AT LINDEN AVE	
IN SERVICE: - -	DAYTON DISTRICT	FILE No. R-
	CADD or DWG. No. 82112183.11	SHEET No. 11 of 24

REVISION INITIALS											

PROPERTY
PENNSYLVANIA R.R.

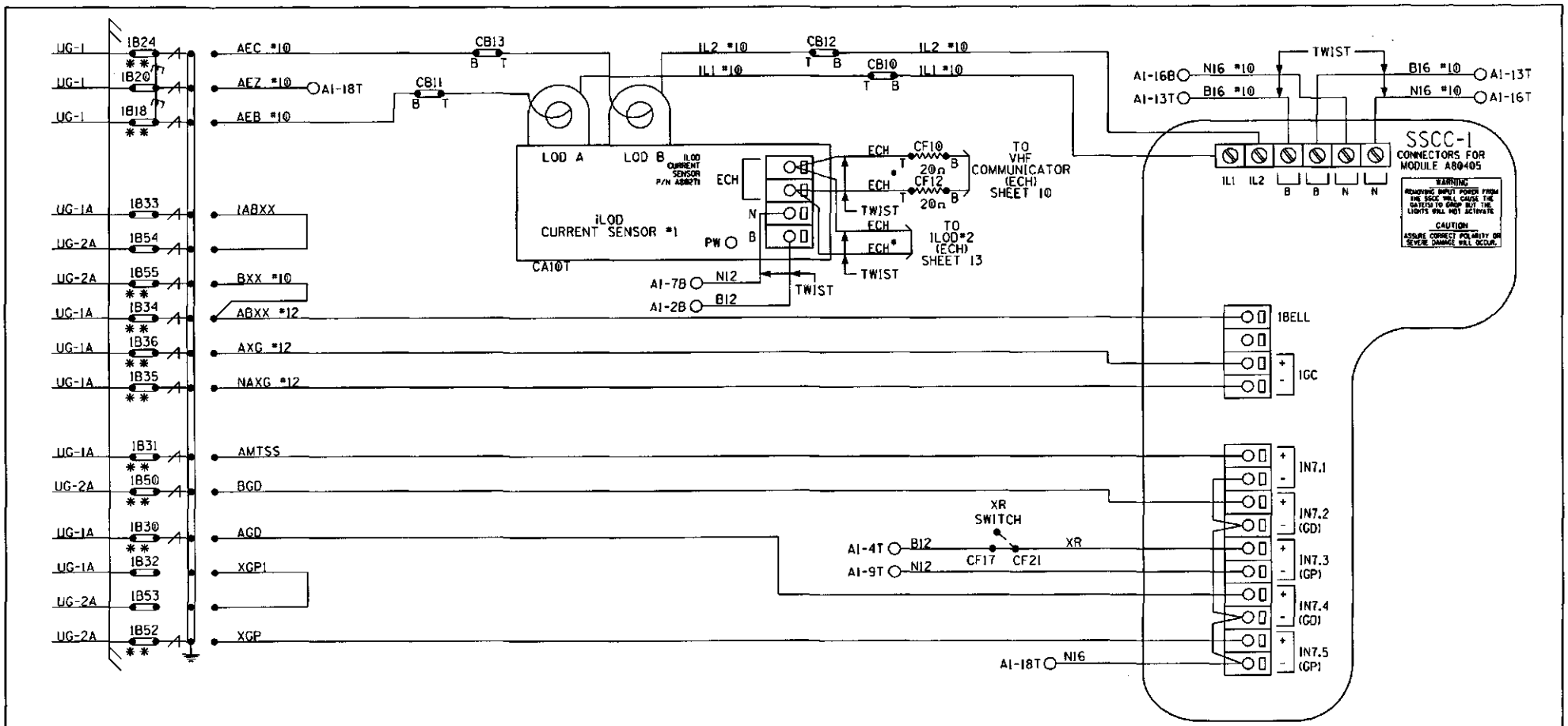

NOTES: ALL WIRING TO BE #16AWG UNLESS NOTED OTHERWISE.

• = ECHELON CONNECTIONS NOT TO EXCEED 53' IN LENGTH AND TOTAL LENGTH NOT TO EXCEED 430' WITH A MAXIMUM OF 8 NODES. RECOMMEND USE BELDEN WIRE CABLE #8461 OR EQUIVALENT.

** = TEST LINKS MUST BE OPENED TEMPORARILY FOR NEW COLD START OF NEW OR REPLACEMENT SSCC MODULE AND CAN ONLY BE CLOSED IN SEQUENCE WITH MFR. INSTRUCTIONS: SECTION 8 OF THE GCP 4000 REFERENCE MANUAL.

PANEL "A2" CONNECTORS FOR SSCC#1 MODULE (A80405) iLOD#1 (A80271) HOOK-UP

DESIGNED BY: JLM 07-13-12	NORFOLK SOUTHERN		
DRAWN BY: XRL 07-13-12	OFFICE OF ASS'T. VICE PRESIDENT COMM. & SIGNAL, ATLANTA, GA.	M.P.: CJ-218.30	
CHECKED BY: PEH 07-26-12	MIAMISBURG, OH FLGS AT LINDEN AVE		
IN SERVICE: - -	DAYTON DISTRICT	FILE No. R-	
	CADD or DWG. No. 82112183.12	SHEET No. 12 of 24	

REVISION INITIALS

PROPERTY PENNSYLVANIA R.R.

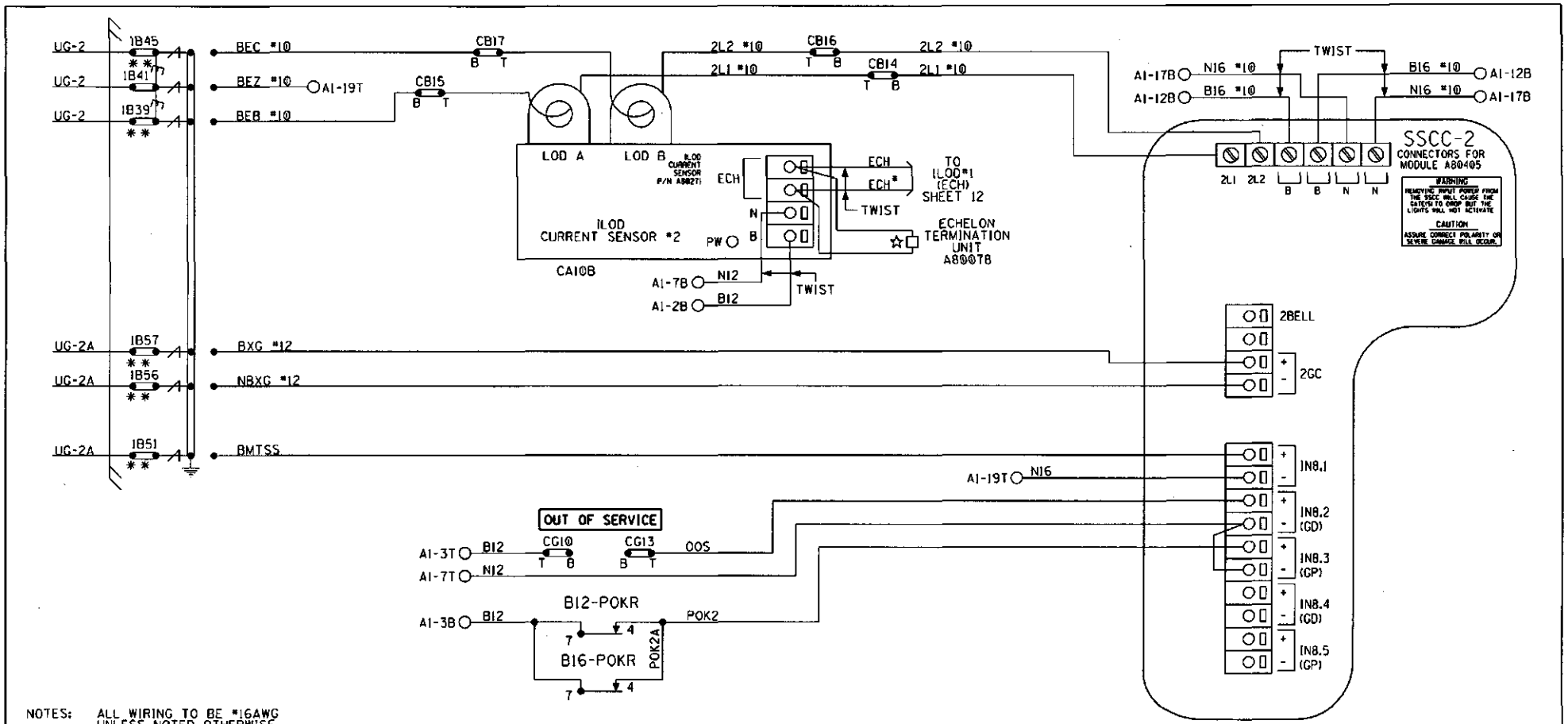

NOTES: ALL WIRING TO BE #16AWG UNLESS NOTED OTHERWISE.

• = ECHELON CONNECTIONS NOT TO EXCEED 53' IN LENGTH AND TOTAL LENGTH NOT TO EXCEED 430' WITH A MAXIMUM OF 8 NODES. RECOMMEND USE BELDEN WIRE CABLE #8461 OR EQUIVALENT.

** = TEST LINKS MUST BE OPENED TEMPORARILY FOR NEW COLD START OF NEW OR REPLACEMENT SSCC MODULE AND CAN ONLY BE CLOSED IN SEQUENCE WITH MFR. INSTRUCTIONS: SECTION 8 OF THE GCP 4000 REFERENCE MANUAL.

☆ = A80078 ECHELON TERMINATION UNIT TO TERMINATE ECHELON NETWORK.

PANEL "A2" CONNECTORS FOR SSCC#2 MODULE (A80405)
ILOD#2 (A80271) HOOK-UP

DESIGNED BY: JLM 07-13-12	NORFOLK SOUTHERN	
DRAWN BY: XRL 07-13-12	OFFICE OF ASS'T. VICE PRESIDENT COMM. & SIGNAL, ATLANTA, GA.	M.P.: CJ-218.30
CHECKED BY: PEH 07-26-12	MIAMISBURG, OH FLGS AT LINDEN AVE	
IN SERVICE: - -	DAYTON DISTRICT	FILE No. R-
	CADD or DWG. No. B2112183.13	SHEET No. 13 of 24

REVISION INITIALS										

PROPERTY
PENNSYLVANIA R.R.

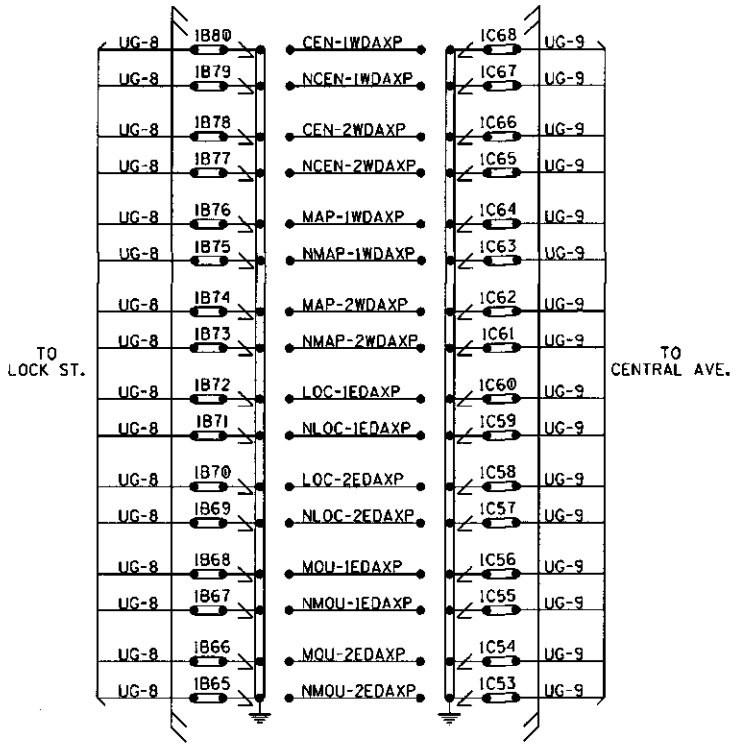

NOTE:
ALL WIRING TO BE #14AWG.

DAX CIRCUITS

DESIGNED BY: JLM 07-13-12	NORFOLK SOUTHERN	
DRAWN BY: XRL 07-13-12	OFFICE OF ASS'T. VICE PRESIDENT COMM. & SIGNAL, ATLANTA, GA.	M.P.: CJ-218.30
CHECKED BY: PEH 07-26-12	MIAMISBURG, OH FLGS AT LINDEN AVE	
IN SERVICE: - -	DAYTON DISTRICT	FILE No. R-
	CADD or DWG. No. 82112183.14	SHEET No. 14 of 24

REVISION INITIALS										

PROPERTY
PENNSYLVANIA R.R.

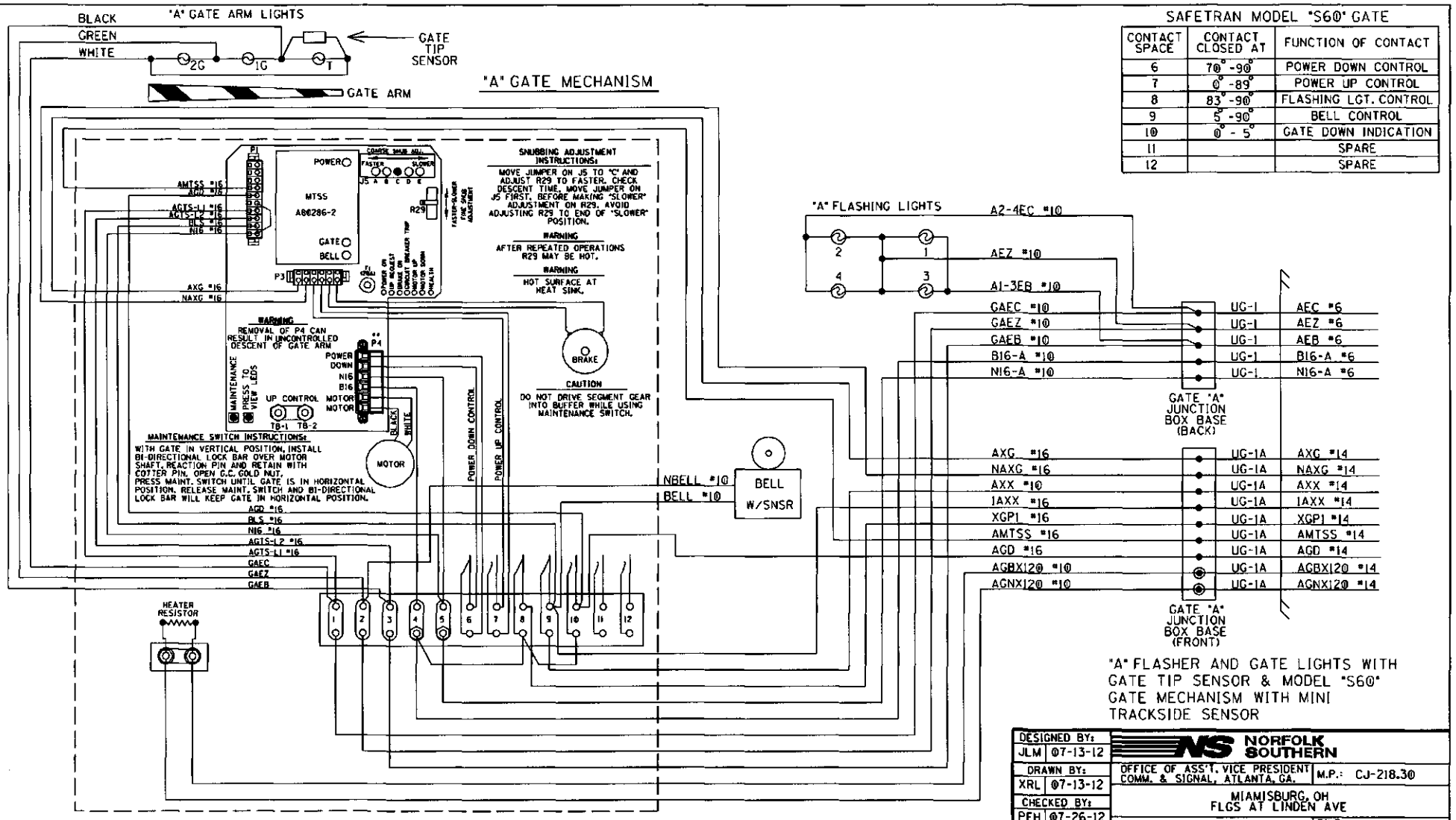

SAFETRAN MODEL "S60" GATE

CONTACT SPACE	CONTACT CLOSED AT	FUNCTION OF CONTACT
6	70°-90°	POWER DOWN CONTROL
7	0°-89°	POWER UP CONTROL
8	83°-90°	FLASHING LGT. CONTROL
9	5°-90°	BELL CONTROL
10	0°-5°	GATE DOWN INDICATION
11		SPARE
12		SPARE

"A" FLASHER AND GATE LIGHTS WITH GATE TIP SENSOR & MODEL "S60" GATE MECHANISM WITH MINI TRACKSIDE SENSOR

DESIGNED BY: JLM 07-13-12	NORFOLK SOUTHERN		
DRAWN BY: XRL 07-13-12	OFFICE OF ASS'T. VICE PRESIDENT COMM. & SIGNAL, ATLANTA, GA.	M.P.: CJ-218.30	
CHECKED BY: PEH 07-26-12	MIAMISBURG, OH FLGS AT LINDEN AVE		
IN SERVICE: - -	DAYTON DISTRICT	FILE No. R-	
	CADD or DWG. No. 82112183.15	SHEET No. 15 of 24	

REVISION INITIALS

PROPERTY PENNSYLVANIA R.R.

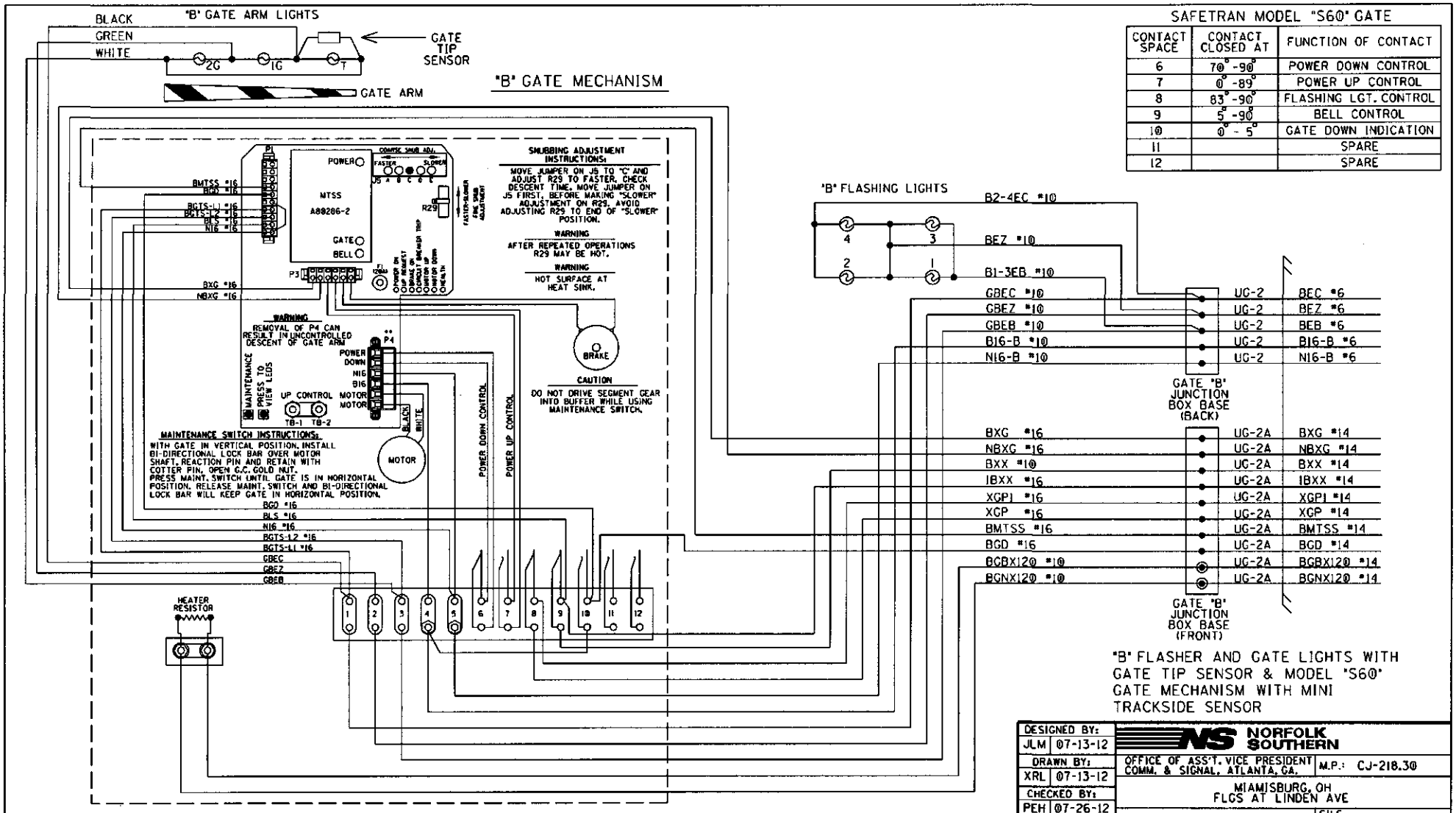

SAFETRAN MODEL "S60" GATE

CONTACT SPACE	CONTACT CLOSED AT	FUNCTION OF CONTACT
6	70°-90°	POWER DOWN CONTROL
7	0°-89°	POWER UP CONTROL
8	83°-90°	FLASHING LGT. CONTROL
9	5°-90°	BELL CONTROL
10	0°-5°	GATE DOWN INDICATION
11		SPARE
12		SPARE

"B" FLASHER AND GATE LIGHTS WITH GATE TIP SENSOR & MODEL "S60" GATE MECHANISM WITH MINI TRACKSIDE SENSOR

DESIGNED BY: JLM 07-13-12	NORFOLK SOUTHERN
DRAWN BY: XRL 07-13-12	OFFICE OF ASS'T. VICE PRESIDENT COMM. & SIGNAL, ATLANTA, GA. — M.P.: CJ-218.30
CHECKED BY: PEH 07-26-12	MIAMISBURG, OH FLGS AT LINDEN AVE
IN SERVICE: - -	DAYTON DISTRICT — FILE No. R-
	CADD or DWG. No. 82112183.16 — SHEET No. 16 of 24

REVISION INITIALS

PROPERTY PENNSYLVANIA R.R.

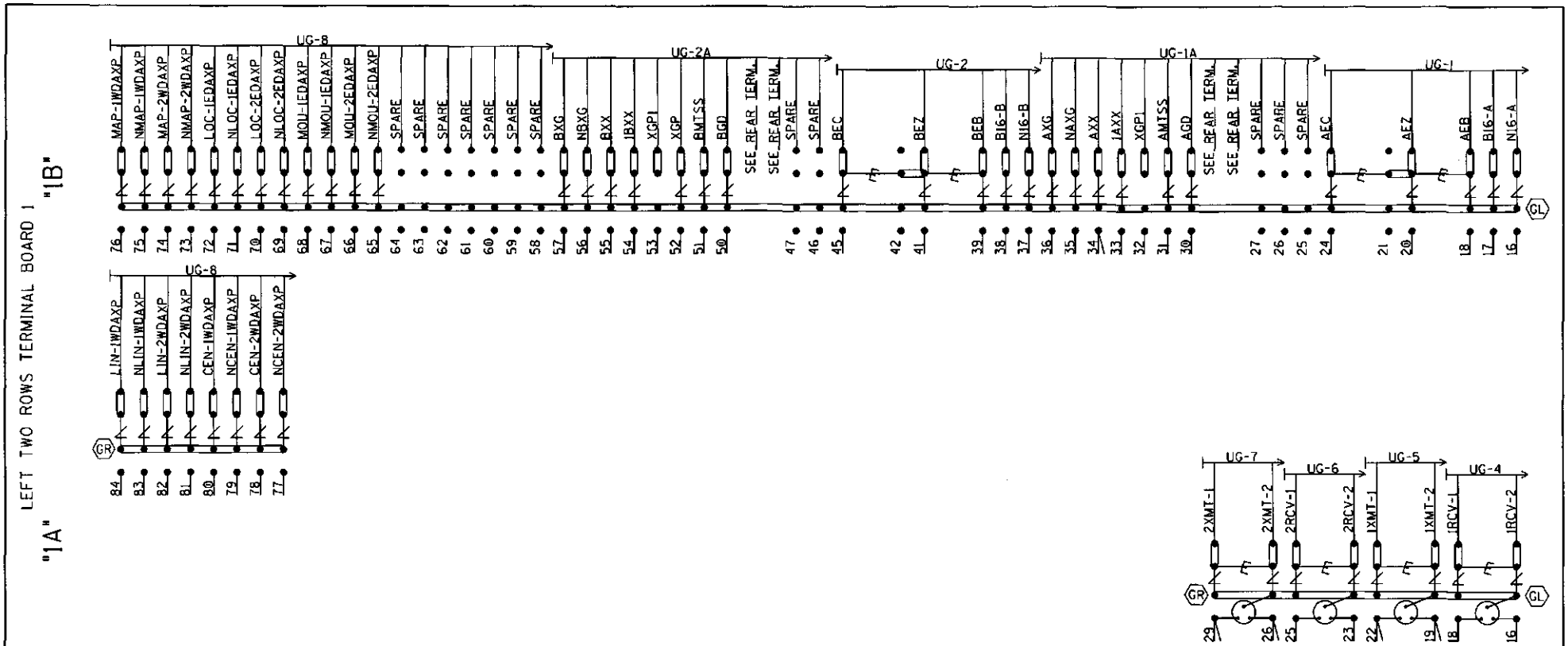

NOTE: INSTALL TEST LINKS ON ALL TRACK WIRES AND ON ALL LOW VOLTAGE UNDERGROUND CABLE TERMINATIONS.

SEE FARADAY SHIELD DETAILS - 1A & 1B FOR HOW THIS PORTION OF THE FARADAY SHIELD IS PREDRILLED. ONLY INSTALL AND USE THE TERMINALS NEEDED.

= Heavy Duty Equalizer (022700-1X)

Clearview = Lightning Arrester (022585-1X)

= LPC-10560-51

GR / GL = TERMINALS GROUNDED TO SHIELD. 4 POST BLOCKS USE EITHER - GR - SERMMI PART NO. 61278 GL - SERMMI PART NO. 61278-1.

BACKBOARD DETAIL - 1A & 1B

DESIGNED BY: JLM 07-13-12	NORFOLK SOUTHERN		
DRAWN BY: XRL 07-13-12	OFFICE OF ASS'T. VICE PRESIDENT COMM. & SIGNAL, ATLANTA, GA.	M.P.: CJ-218.30	
CHECKED BY: PEH 07-26-12	MIAMISBURG, OH FLGS AT LINDEN AVE		
IN SERVICE: - -	DAYTON DISTRICT	FILE No. R-	
	CADD or DWG. No. 82112183.17	SHEET No. 17 of 24	

REVISION INITIALS

PROPERTY PENNSYLVANIA R.R.

REAR VIEW OF LEFT TWO ROWS TERMINAL BOARD 1
"1A"
"1B"

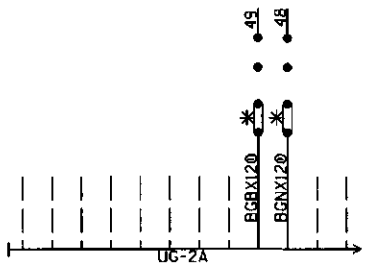

(SEE PREVIOUS SHEET FOR OTHER WIRES IN CABLE)

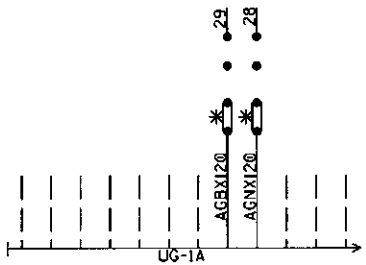

(SEE PREVIOUS SHEET FOR OTHER WIRES IN CABLE)

NOTE: ALL 120VAC AND ABOVE WILL BE WIRED TO THE REAR OF FARADAY BACKBOARD. INSULATED NUTS MUST BE USED ON ALL TERMINALS.

✳ = CLOSED DURING WINTER MONTHS

REAR OF FARADAY BACKBOARD
REAR BACKBOARD DETAIL - 1A & 1B

DESIGNED BY: JLM 07-13-12	NORFOLK SOUTHERN	
DRAWN BY: XRL 07-13-12	OFFICE OF ASS'T. VICE PRESIDENT COMM. & SIGNAL, ATLANTA, GA.	M.P.: CJ-218.30
CHECKED BY: PEH 07-26-12	MIAMISBURG, OH FLGS AT LINDEN AVE	
IN SERVICE: - -	DAYTON DISTRICT	FILE No. R-
	CADD or DWG. No. 82112183.18	SHEET No. 18 of 24

REVISION INITIALS

PROPERTY
PENNSYLVANIA R.R.

RIGHT HALF TERMINAL BOARD 1

"1C"

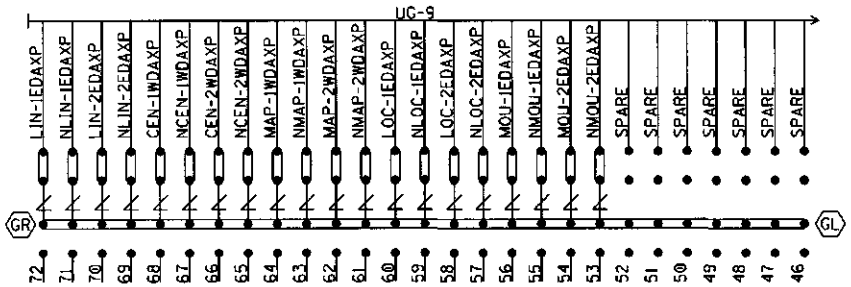

NOTE: INSTALL TEST LINKS ON ALL TRACK WIRES AND ON ALL LOW VOLTAGE UNDERGROUND CABLE TERMINATIONS.

= Heavy Duty Equalizer (022700-1X)

Clearview = Lightning Arrester (022585-1X)

= LPC-10560-51

SEE FARADAY SHIELD DETAILS - 1A & 1B FOR HOW THIS PORTION OF THE FARADAY SHIELD IS PREDRILLED. ONLY INSTALL AND USE THE TERMINALS NEEDED.

GR / GL = TERMINALS GROUNDED TO SHIELD. 4 POST BLOCKS USE EITHER - GR - SERMMI PART NO. 61278 GL - SERMMI PART NO. 61278-1.

BACKBOARD DETAIL - 1C

DESIGNED BY: JLM 07-13-12	NORFOLK SOUTHERN		
DRAWN BY: XRL 07-13-12	OFFICE OF ASS'T. VICE PRESIDENT COMM. & SIGNAL, ATLANTA, GA.	M.P.: CJ-218.30	
CHECKED BY: PEH 07-26-12	MIAMISBURG, OH FLGS AT LINDEN AVE		
IN SERVICE: - -	DAYTON DISTRICT	FILE No. R-	
	CADD or DWG. No. 82112183.19	SHEET No. 19 of 24	

REVISION INITIALS

PROPERTY PENNSYLVANIA R.R.

NOTE: IF THE FARADAY SHIELD WOULD EVER NEED TO BE DRILLED IN THE FIELD, PROPER PRECAUTIONS MUST BE TAKEN TO INSURE METAL SHAVINGS DO NOT GET INTO EXISTING TERMINALS/WIRES.

AREA BELOW IS SCALED WITH AS=.75

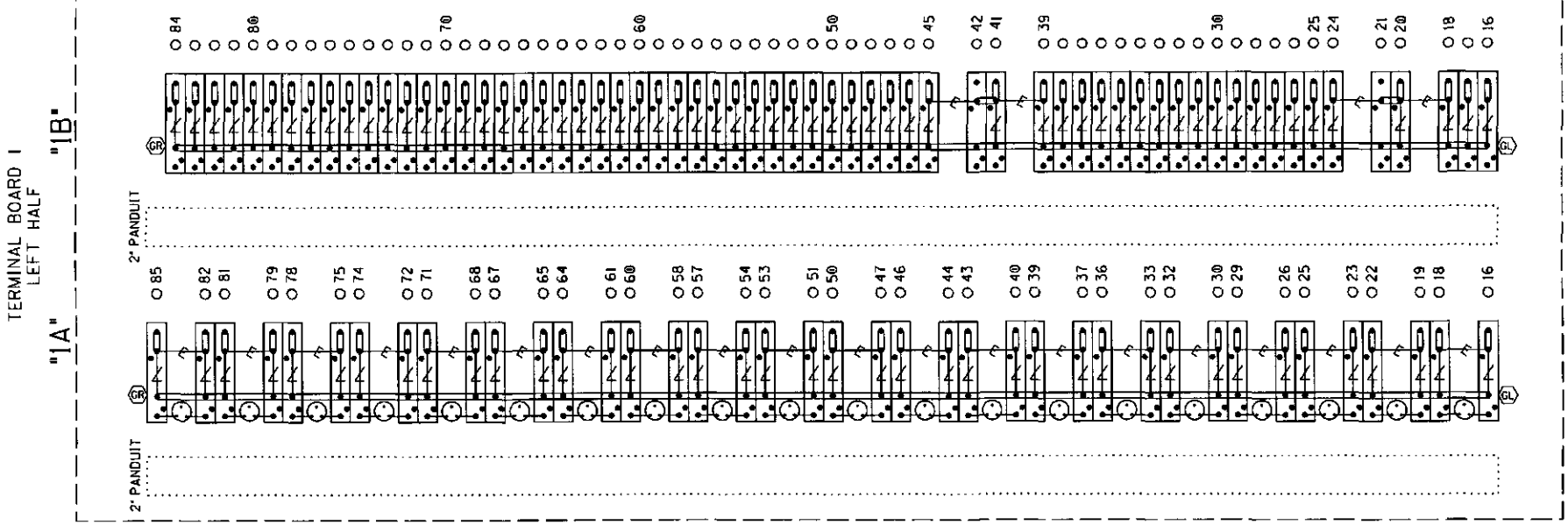

= Heavy Duty Equalizer (022700-1X)

Clearview = Lightning Arrester (022585-1X)

= LPC-10560-51

TERMINAL BOARD 1
LEFT TWO ROWS
FARADAY SHIELD DETAIL - 1A & 1B

= INDICATES PLACEMENT OF PANDUIT

THIS SHEET IS FOR REFERENCE ONLY. TO REFLECT HOW THE FARADAY SHIELD IS PREDRILLED. ONLY INSTALL AND USE THE TERMINALS NEEDED.

GR / GL = TERMINALS GROUNDED TO SHIELD. 4 POST BLOCKS USE EITHER - GR - SERMMI PART NO. 61278 GL - SERMMI PART NO. 61278-1.

DESIGNED BY: JLM 07-13-12	NORFOLK SOUTHERN		
DRAWN BY: XRL 07-13-12	OFFICE OF ASS'T. VICE PRESIDENT COMM. & SIGNAL, ATLANTA, GA.	M.P.: CJ-218.30	
CHECKED BY: PEH 07-26-12	MIAMISBURG, OH FLGS AT LINDEN AVE		
IN SERVICE: - -	DAYTON DISTRICT	FILE No. R-	
	CADD or DWG. No. 82112183.20	SHEET No. 20 of 24	

REVISION INITIALS

PROPERTY PENNSYLVANIA R.R.

NOTE: IF THE FARADAY SHIELD WOULD EVER NEED TO BE DRILLED IN THE FIELD, PROPER PRECAUTIONS MUST BE TAKEN TO INSURE METAL SHAVINGS DO NOT GET INTO EXISTING TERMINALS/WIRES.

AREA BELOW IS SCALED WITH AS=.75

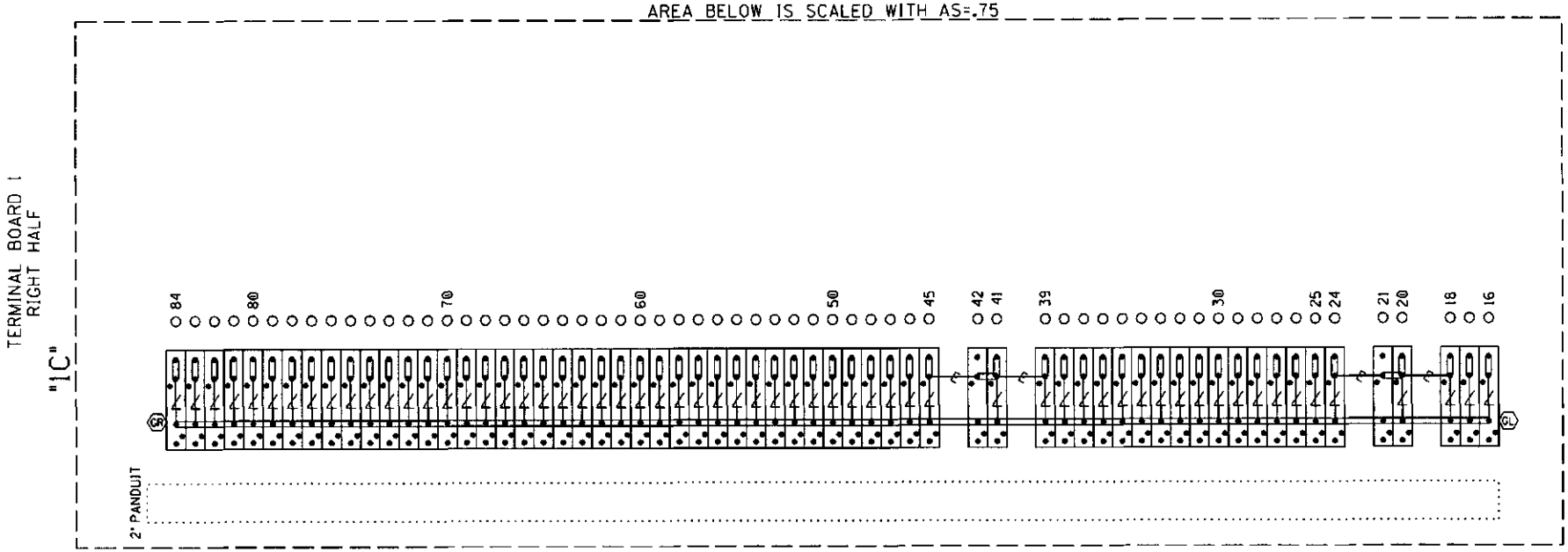

= Heavy Duty Equalizer (022700-1X)

Clearview = Lightning Arrester (022585-1X)

= LPC-10560-51

TERMINAL BOARD 1
RIGHT ROW
FARADAY SHIELD DETAIL - 1C

= INDICATES PLACEMENT OF PANDUIT

THIS SHEET IS FOR REFERENCE ONLY, TO REFLECT HOW THE FARADAY SHIELD IS PREDRILLED. ONLY INSTALL AND USE THE TERMINALS NEEDED.

GR / GL = TERMINALS GROUNDED TO SHIELD. 4 POST BLOCKS USE EITHER - GR - SERMMI PART NO. 61278 GL - SERMMI PART NO. 61278-1.

DESIGNED BY: JLM	07-13-12
DRAWN BY: XRL	07-13-12
CHECKED BY: PEH	07-26-12
IN SERVICE:	- -

NORFOLK SOUTHERN

OFFICE OF ASS'T. VICE PRESIDENT COMM. & SIGNAL, ATLANTA, GA.

M.P.: CJ-218.30

MIAMISBURG, OH
FLGS AT LINDEN AVE

DAYTON DISTRICT

FILE No. R-

CADD or DWG. No. 82112183.21

SHEET No. 21 of 24

REVISION INITIALS

PROPERTY
PENNSYLVANIA R.R.

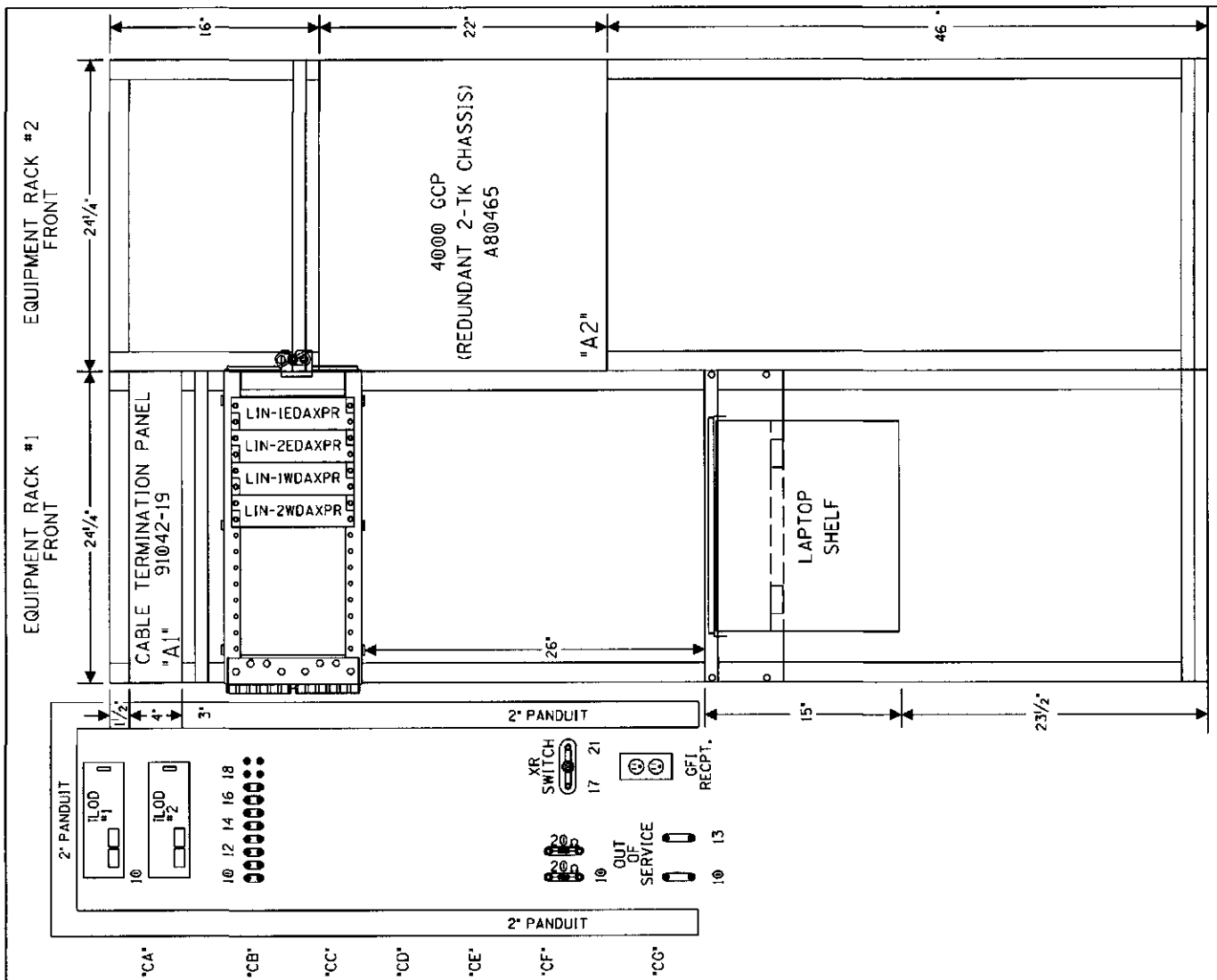

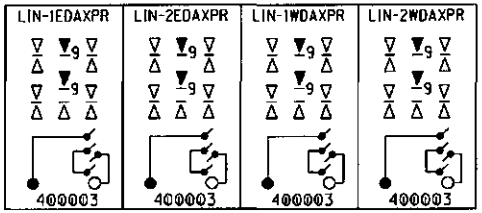

SIDE "C"

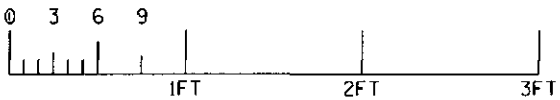

RACK PLACEMENT
6' X 8' HOUSE - SIDE "C"

DESIGNED BY: JLM 07-13-12	NORFOLK SOUTHERN	
DRAWN BY: XRL 07-13-12	OFFICE OF ASS'T. VICE PRESIDENT COMM. & SIGNAL, ATLANTA, GA.	M.P.: CJ-218.30
CHECKED BY: PEH 07-26-12	MIAMISBURG, OH FLGS AT LINDEN AVE	
IN SERVICE: - -	DAYTON DISTRICT	FILE No. R-
	CADD or DWG. No. 82112183.22	SHEET No. 22 of 24

REVISION INITIALS

PROPERTY
PENNSYLVANIA R.R.

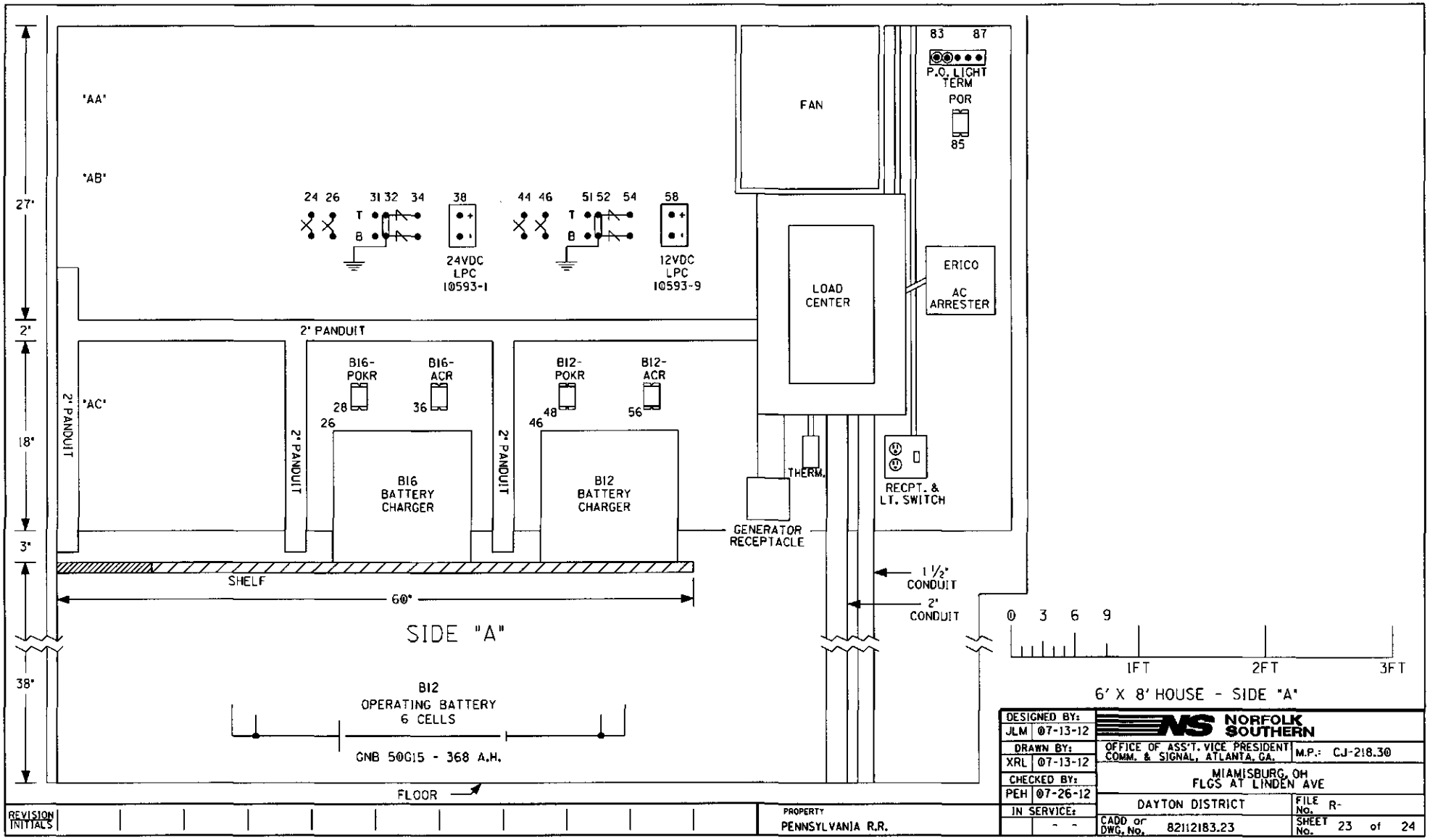

DESIGNED BY: JLM 07-13-12	NORFOLK SOUTHERN		
DRAWN BY: XRL 07-13-12	OFFICE OF ASS'T. VICE PRESIDENT COMM. & SIGNAL, ATLANTA, GA.	M.P.: CJ-218.30	
CHECKED BY: PEH 07-26-12	MIAMISBURG, OH FLGS AT LINDEN AVE		
IN SERVICE: - -	DAYTON DISTRICT	FILE No. R-	
	CADD or DWG. No. 82112183.23	SHEET No. 23 of 24	

REVISION INITIALS

PROPERTY
PENNSYLVANIA R.R.

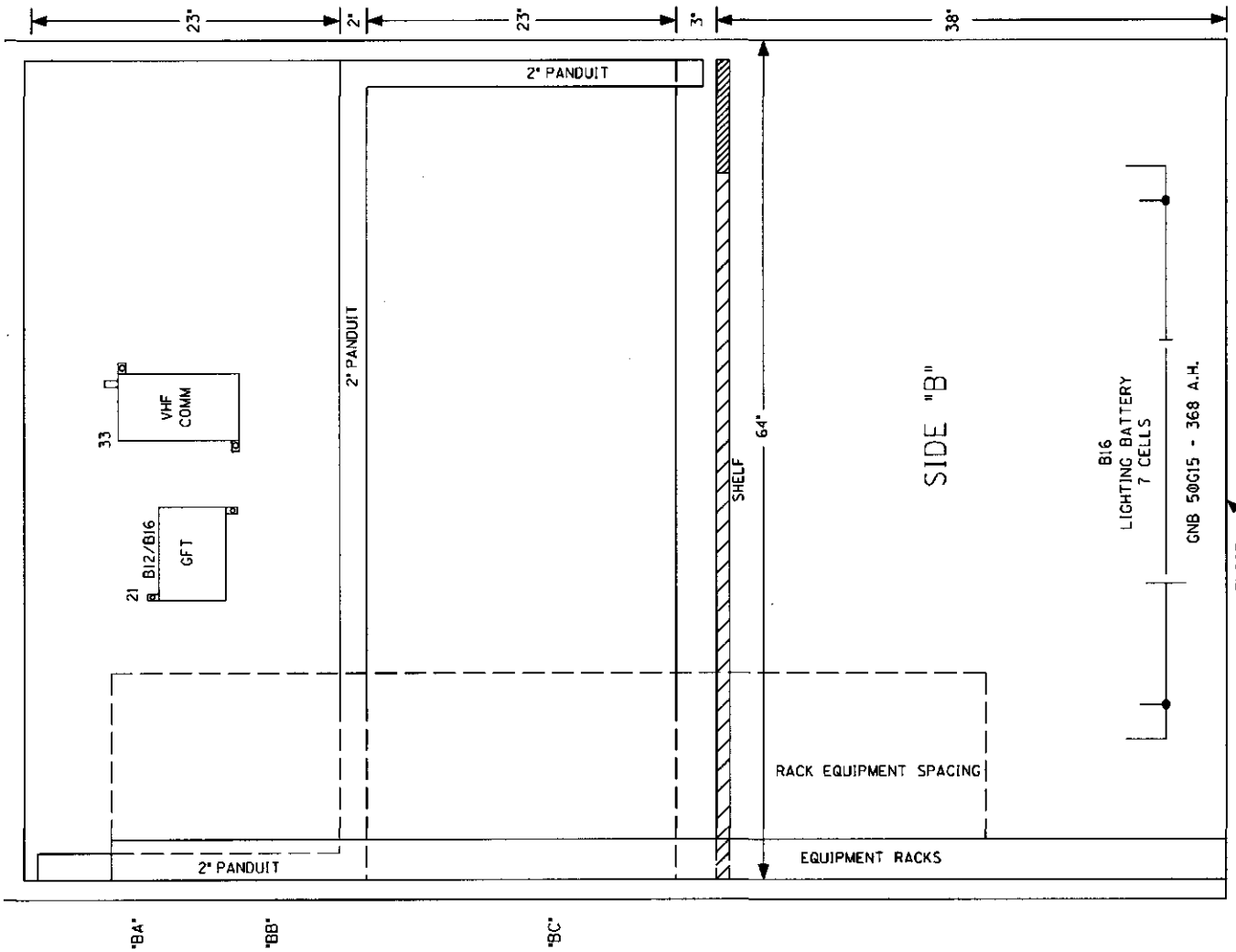

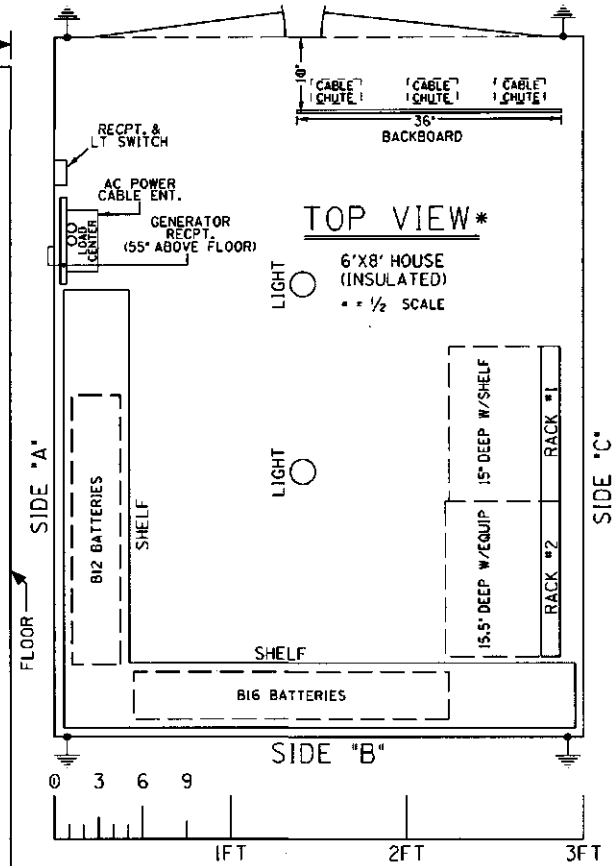

6' X 8' HOUSE (SIDE "B" & TOP VIEW)

DESIGNED BY: JLM 07-13-12	NORFOLK SOUTHERN	
DRAWN BY: XRL 07-13-12	OFFICE OF ASS'T. VICE PRESIDENT COMM. & SIGNAL, ATLANTA, GA.	M.P.: CJ-218.30
CHECKED BY: PEH 07-26-12	MIAMISBURG, OH FLGS AT LINDEN AVE	
IN SERVICE: - -	DAYTON DISTRICT	FILE No. R-
	CADD or DWG. No. 82112183.24	SHEET No. 24 of 24

REVISION INITIALS

PROPERTY PENNSYLVANIA R.R.

5	07-13-12	JLM	XRL	PEH	4	03-29-07	JW	SJR	SSC	3	4-28-81			2	4-30-77	1	10-31-66	REFERENCE
PLAN VOID ACCOUNT OF NEW SHELTER INSTALLED. SYSTEM FILE NO: WO/AFE NO: IN SERVICE: PER:					PLAN REVISED ACCOUNT OF CED INSTALLED BETWEEN CP 218 AND CP 224. PROJECT NO: R-2221 SYSTEM FILE NO: 081-10.110 WO/AFE NO: IN SERVICE: 10-17-07 PER: AFS			TCG	SSC	REVISED ACCOUNT OF BONDED BRIDGE "BB" LINE CIRCUIT. IN SERVICE PER: OLD PLAN NO. W84 04-1183-X1				CHANGES MADE ACCT. INSTALLATION OF ATC COLUMBUS TO CINCINNATI. PER: IN SPECTORS AS IN SERVICE PLAN OF 12-17-74	AS IN SERVICE PER INSPECTORS FIELD CHECK OF 1-15-66 CHECKED BY E.E. Harris STAFF ENG OFC B S		NEW PLAN SHOWS AREA OF INSTALLATION OF AUTO CROSSING PROTECTION AT LINDEN AVENUE IN MIAMISBURG, OHIO. REF. NO. 14684 CHECKED BY E.E. Harris STAFF ENGINEER

THIS LOCATION IS VOID ON PROJECT COMPLETION

CONRAIL

INDIANAPOLIS DIVISION

COMMUNICATION & SIGNAL DEPT. INDIANAPOLIS, IND.

CIRCUITS

HIGHWAY CROSSING PROTECTION

LINDEN AVE.

MIAMISBURG, OHIO

AUGUST 2, 1966

REV. 5
*10.1382
JLM/XRL
07-13-12
VOID/ALL OUT
CHECKED BY PEH
07-26-12

IN SERVICE _____ SIGNED _____ DATE

☐ S&E ENGINEERING COPY
☐ CONSTRUCTION OFFICE COPY
RETURN TO S&E ENG. AFTER COMPLETION
☐ FIELD COPY
RETURN TO CASE AFTER COMPLETION
☐ PROJECT ENGINEER COPY

		REVISION									
		1	2	3	4	5	6	7	8	9	10
1	REVISION, TITLE, NOTES AND INDEX			✓	✓						
2	LOCATION PLAN	✓	✓	✓	✓						
3	LINE CIRCUITS	✓	✓		✓						
4	GATE AND FLASHER CONTROL CIRCUITS	✓	✓		✓						
5	GATE OPERATING CIRCUITS	✓									
6	CASE DETAIL	✓	✓		✓						

REV. No 4 | DATE 10-17-07 | 82112-2183

SHEET 1

H. Alan Jones
ASST. ENGR. OF COMM. & SIG.

82112:83.01X

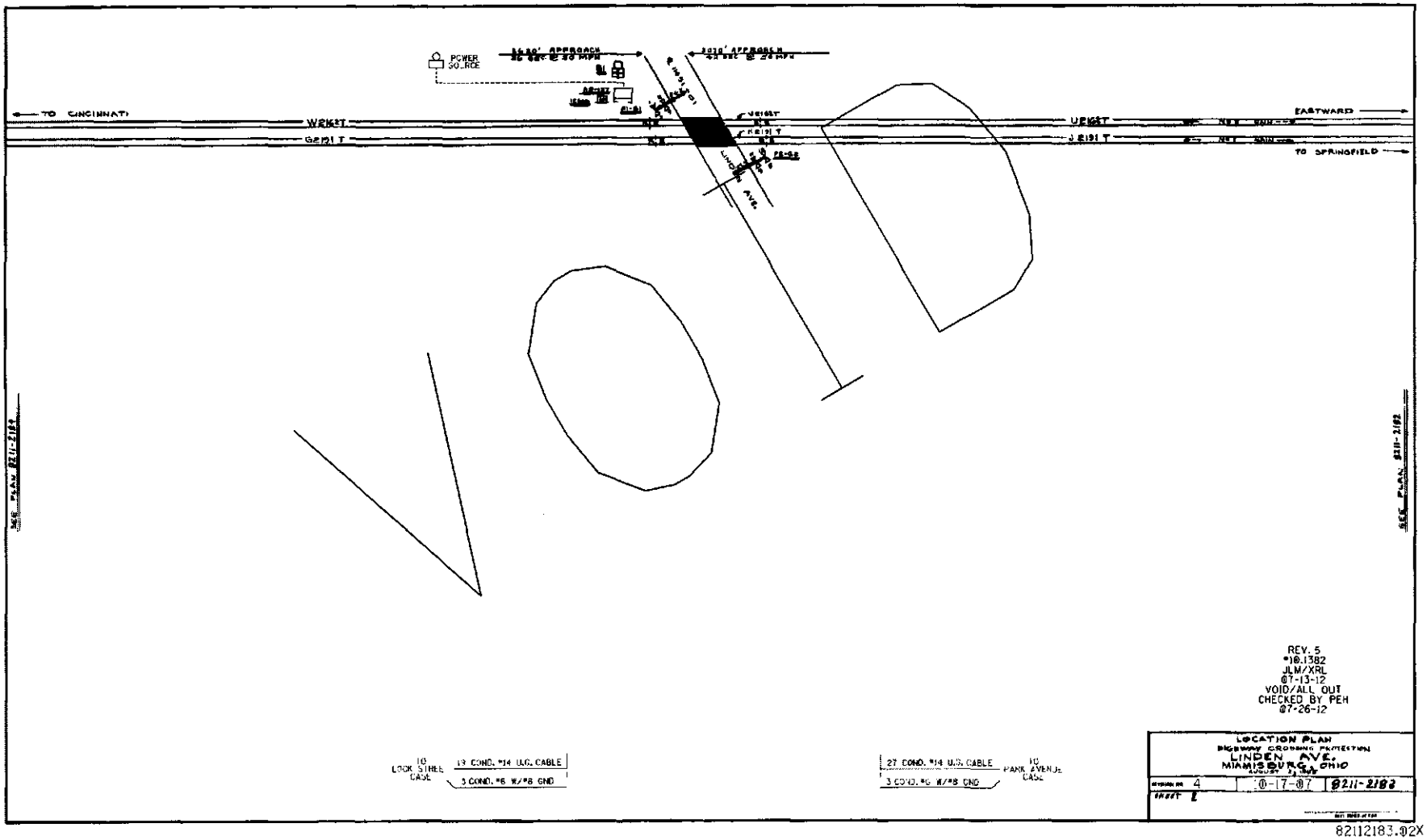

REV. 5
#10.1382
JLM/XRL
07-13-12
VOID/ALL OUT
CHECKED BY PEH
07-26-12

LOCATION PLAN
HIGHWAY CROSSING PROTECTION
LINDEN AVE.
MIAMISBURG, OHIO
AUGUST 1, 1982

REVISION NO. 4	07-17-07	8211-2182
SHEET 1		

82112183.02X

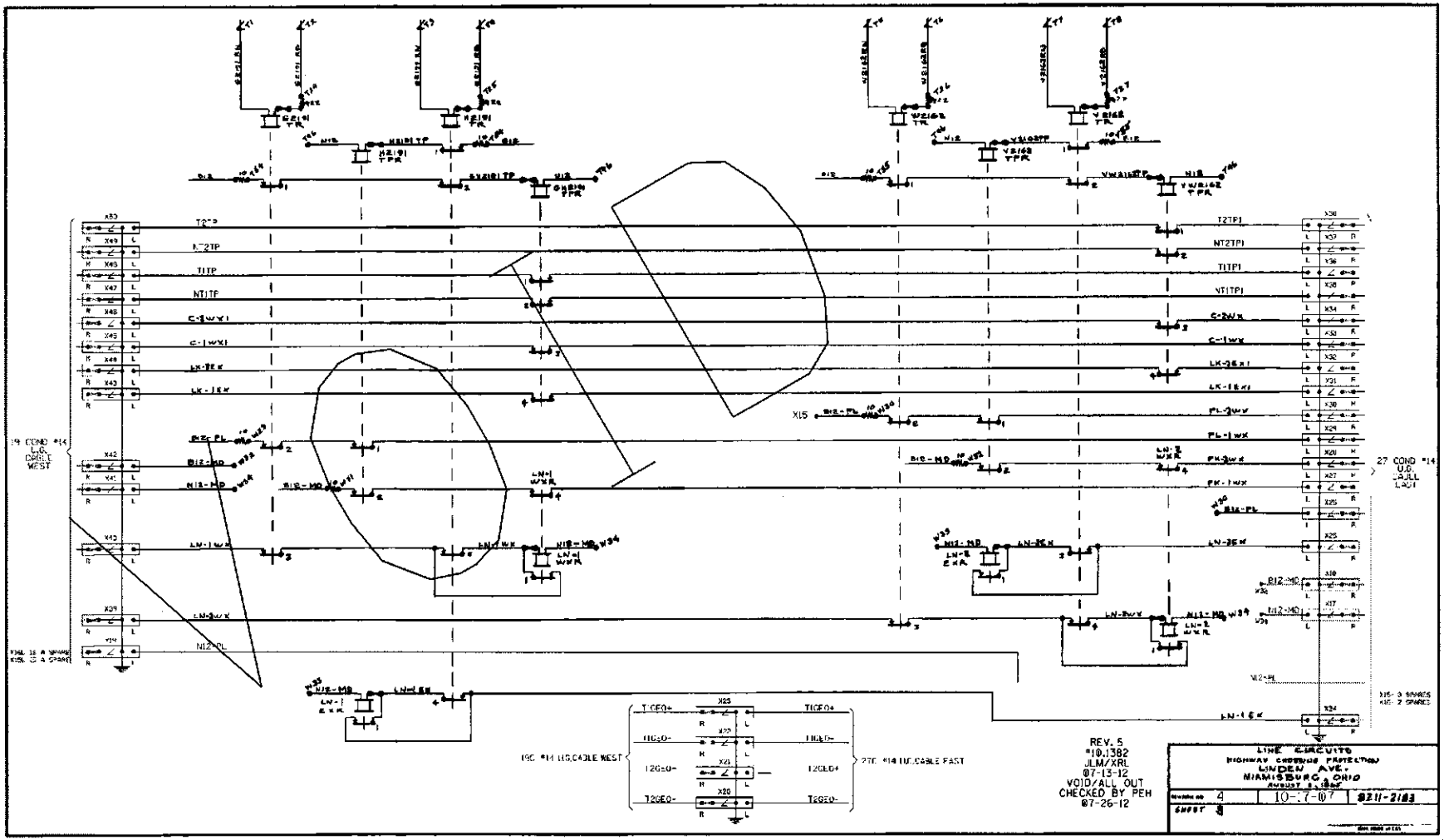

8211 2183.03X

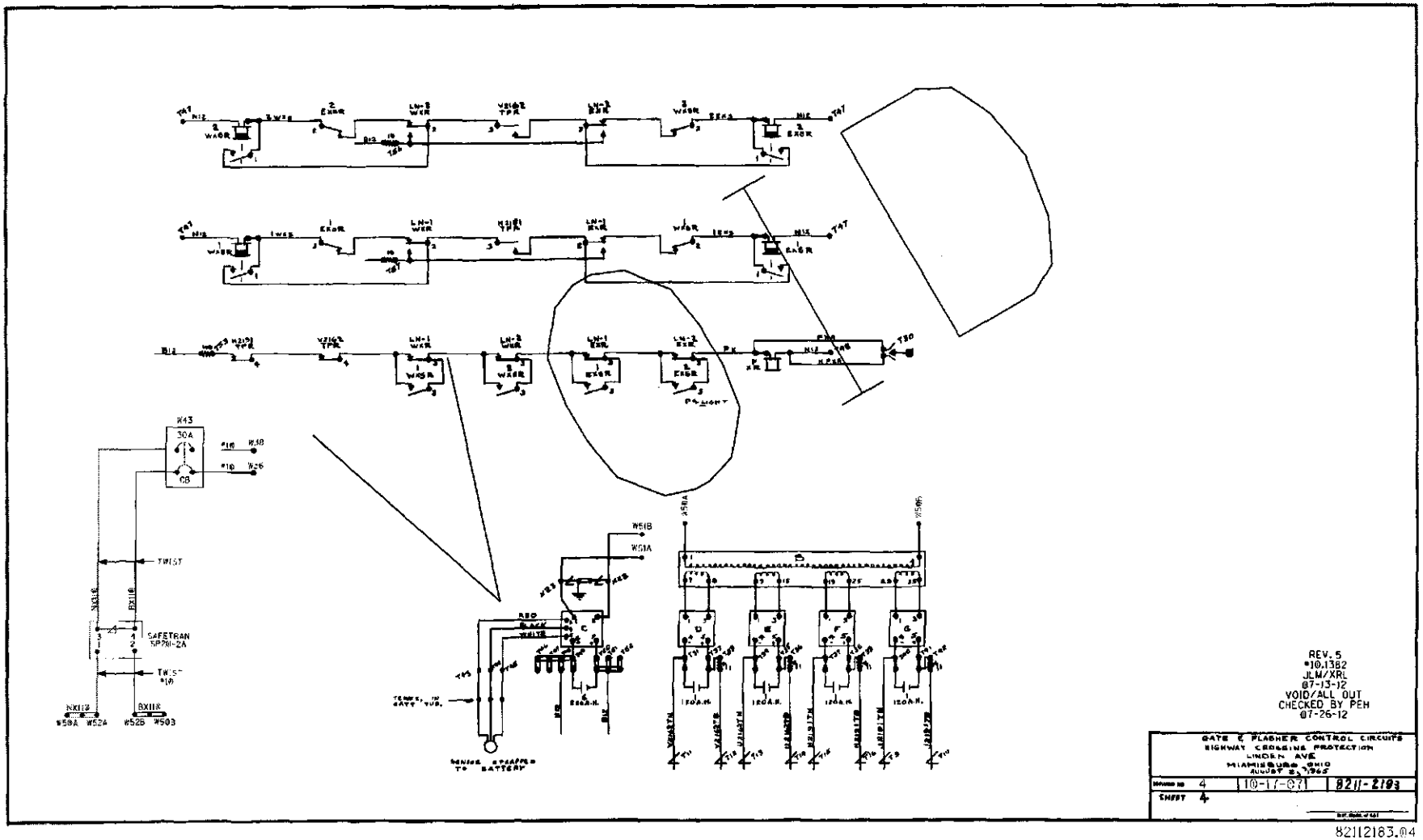

82112183.04 X

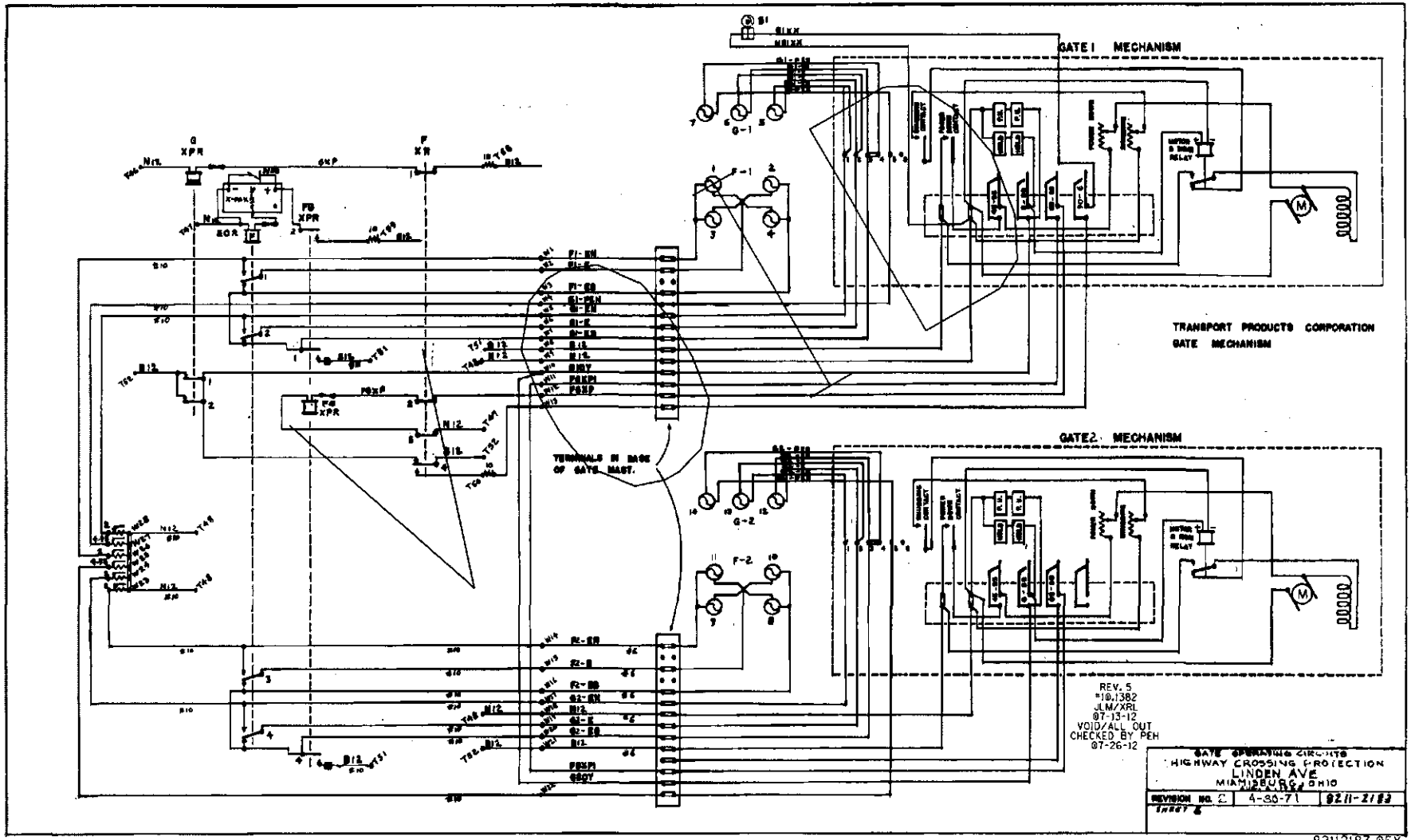

82112183.05X

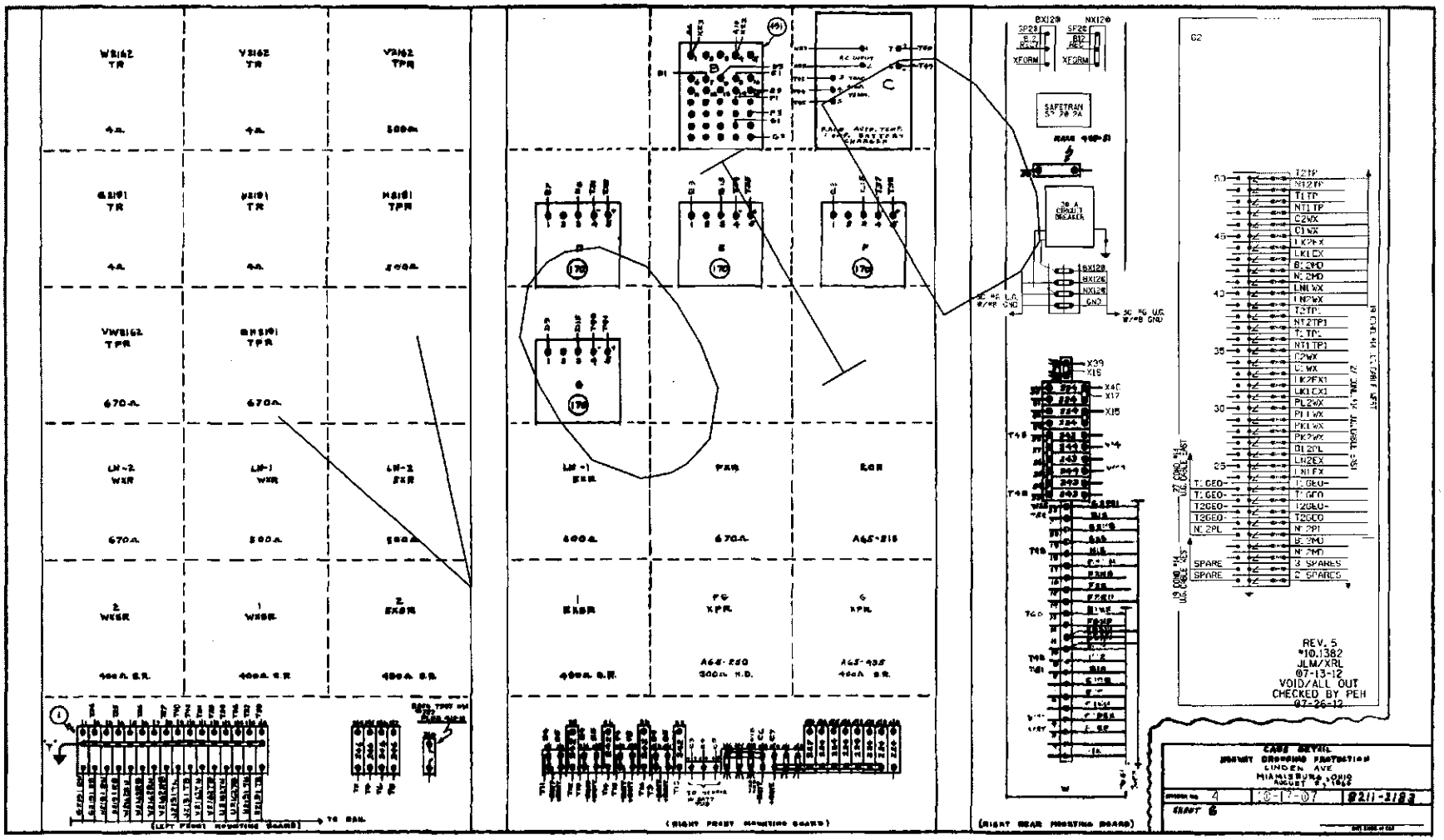
(LEFT FRONT MOUNTING BOARD)
(RIGHT FRONT MOUNTING BOARD)
(RIGHT REAR MOUNTING BOARD)
SAFETRAN
REV. 5
*10.1382
JLM/XRL
07-13-12
VOID/ALL OUT
CHECKED BY PEH
07-26-12
CABS DEVIL
07-17-07
821-2183

821:2:83.06X

24-Aug-12

Detailed Estimate for Grade Crossing Warning Devices

City/State: MIAMISBURG, OH
MilePost: CJ-218.5
State Proj. No.:
S&E Proj. No.: 10.1383
Man Days: 132

Road: LOCK ST.
DOT/AAR: 524658J
County: MONTGOMERY
File Number: 061-10.1024

*****Purchases - Others*****		
Meals and Lodging:	$17,740.80	
Rental of Equipment:	$18,480.00	
(2 Trucks, 1 Backhoe w/ Trailer and 1 Pipe-Pusher for 33 Days)		
Construction Supervision Vehicle:	$3,302.30	
Purchases - Other Total:		$39,523.10
*****Material And Additives*****		
Material Cost:	$99,599.00	
Sales and Use Tax:	$0.00	
Material Handling Freight:	$4,979.94	
Material Total:		$104,578.94
*****Labor And Additives*****		
Labor Cost:	$36,960.00	
(4 man crew at $1,120.00 a day for: 33 days)		
Payroll Tax & Overheads:	$49,097.66	
Preliminary Engineering:	$12,017.17	
Construction Supervision:	$10,433.81	
Labor Total:		$108,508.64
	Project Cost:	$252,610.68
	Scrap / Salvage Credit:	$0.00
	Project Total:	**$252,611.00**

Estimated on: 24-Aug-12

Estimated by: bf2cc

Estimate valid for 1 year from date of estimate

Norfolk Southern Railway

Highway Crossing Signalization Program - Material List

Do not substitute items without permission from S & E Engineering

City:	MIAMISBURG
Road:	LOCK ST.
Mile Post:	CJ-218.5
Drawing Number:	82112184
State ProjectNumber:	
County:	MONTGOMERY
A A R Number:	524658J
Project Number:	10.1383
File Number:	061-10.1024
New File Number:	CX0117936
WBS:	F-00175-27-1
Store Number:	
Supervisor:	D.R. DRAKE
Tax Code:	

Vendor to supply the following copies after pricing:

1 Set - Material Management with original Invoice
2 Sets - with plans shipped in car with material
1 Set - S&EGen. Supt. Construction w/copy of invoice

Location: MIAMISBURG OH S&E Proj. No.: 10.1383 AFE No.: F-00175-27-1 Drawing No.: 82112184

Store No.: P.O.Number: Date Required: Date Shipped: Vendor: Xorail

Qty.	Class-Item-CD	UI	Price per Item	Total Price	Item Description	Quantity Shipped	Quantity Installed Date Quan.	Date Quan.	Date Quan.	Quantity Returned (Credit)	Special Instructions
3	670-360693-4	EA	$5.55	$16.65	AAR/DOT NUMBER PLATE/DECAL, ORDER 3 PER PROJECT. 60 DAY LEAD TIME. SUPPLIED BY S'TRAN.						
1	165-006505-4	EA	$1,075.23	$1,075.23	AC SERVICE, COMPLETE LESS METER BASE, ASSEMBLED ON 30' POLE						
40	670-119241-4	EA	$25.01	$1,000.40	ARRESTOR, LIGHTNING HEAVY DUTY CLEAR VIEW SAFETRAN 022585-1X						
13	105-288384-4	EA	$271.16	$3,525.08	BATTERY,GNB 368AH MODEL 50G15 SINGLE CELL 2.25 VOLTS, FOR USE WITH CROSSINGS DESIGNED AFTER 09/09						
2	670-980689-4	EA	$75.48	$150.96	BRACKET HIGH WIND, (RIGID 3'), WIG- 191036, WALRUS TUSK TYPE						
2	670-561375-4	EA	$1,208.79	$2,417.58	BRACKET, GATE SAVER, NEG385102GS, SPRING LOADED SWING AWAY ADAPTER FOR FIBERGLASS/ALUMINUM GATES, USE WITH GATE 38' AND LESS						
1	670-356949-4	EA	$90.00	$90.00	CABLE, 10' GENERATOR HOOK UP, SERRMI P/N 40524. FEMALE CONNECTOR						
350	465-939422-4	LF	$2.92	$1,022.00	CABLE, UG 12 CONDUCTOR NO 14 AWG SOLID EACH CONDUCTOR WITH 5/64 IN INSULATION 10 MIL						
500	465-292862-4	LF	$1.36	$680.00	CABLE, UG 2-6 TWISTED, S-23 OKONITE 113-12-3933 SOLID TINNED CONDUCTOR						
550	465-948605-4	LF	$6.51	$3,580.50	CABLE, UG 27 CONDUCTOR NO 14 AWG SOLID EACH CONDUCTOR WITH 5/64 IN INSULATION 10 MIL						
350	465-292929-4	LF	$4.13	$1,445.50	CABLE, UG 5 COND. NO. 6 AWG SOLID COPPER CABLE TO MEET NS CORP. SPEC. FOR SIGNAL						
350	465-791835-4	FT	$3.54	$1,239.00	CABLE, UG AC ENTRANCE 3C#6-7X OKONITE FMPF-L 094-078 TR W/G 1 X 8 7X W010 BRZ TAPE 600V PRODUCT CODE 206-11-6070						
80	165-544477-4	FT	$2.61	$208.80	CONDUIT, 4"x10' PVC, SCHEDULE 80 BELL CONNECTOR AT ONE END, 1/2 PT. GLUE IN KIT 670-123298-4						
4	670-664917-4	EA	$90.11	$360.44	CONNECTOR KIT, WELDED FAR RAIL, CONSISTING OF RUBBER HOSE PROPERLY DRILLED, BONDSTRAND, 1 SPLICING SLEEVE, 1 REDUCING SLEEVE, 3 CLAMPS, 1 TRACK CLIP, 1 WEB WELDED TRACK CONNECTOR, 1 WELD METAL, SAFETRAN 111359-2X						

APPROVED BY STATE	APPROVED BY RAILROAD	CAR NUMBER	SEAL NUMBER

Location: MIAMISBURG OH S&E Proj. No.: 10.1383 AFE No.: F-00175-27-1 Drawing No.: 82112184

Store No.: P.O.Number: Date Required: Date Shipped: Vendor: Xorail

Qty.	Class-Item-CD	UI	Price per Item	Total Price	Item Description	Quantity Shipped	Quantity Installed Date Quan.	Date Quan.	Date Quan.	Quantity Returned (Credit)	Special Instructions
4	670-632520-4	EA	$79.69	$318.76	CONNECTOR KIT, WELDED NEAR RAIL, CONSISTING OF, RUBBER HOSE PROPERLY DRILLED, BONDSTRAND, SPLICING SLEEVE, 1 REDUCING SLEEVE, 5 CLAMPS, 1 TRACK CLIP, 1 WEB WELDED TRACK CONNECTOR, 1 WELD METAL, SAFETRAN 111359-1X						
1	670-793404-4	EA	$1,159.00	$1,159.00	COUNTERWEIGHT PKAGE, 17-24'GATE S'TRAN S- MECH ONLY, STAINLESS, TO INCLUDE HUB, SUPPORT ARMS						
1	670-794453-4	EA	$1,253.03	$1,253.03	COUNTERWEIGHT PKAGE, 25-31'GATE S'TAN S- MECH ONLY, STAINLESS TO INCLUDE HUB, SUPPORT ARMS						
4	670-760012-4	EA	$44.32	$177.28	COVER, FOR 1 WAY FLASHING LIGHT ASSY. 18 OZ. BLACK VINYL COATED NYLON. ====TO COVER 2 LAMPS====						
1	670-986650-4	EA	$354.27	$354.27	DISPOSAL, CONSTRUCTION DEBRIS AND CLEANING X'ING EQUIPMENT CONTAINER						
1	670-000004-4	EA	$700.00	$700.00	FCC LICENSE FOR MONITOR/RADIO						
2	670-000003-4	EA	$255.85	$511.70	FILL/STONE #57, QUANITY IS BASED ON TRUCK LOAD PLUS DELIVERY COST						
2	670-015231-4	EA	$599.40	$1,198.80	FOUNDATION, DIXIE,S-2 GATE 2'6"X2'6"X5'6" ASSEMBLED						
1	670-257031-4	EA	$422.36	$422.36	GATE ARM, FIBERGLASS-ALUMINUM, 17-24 FT, INCLUDES GATE GUARD FOR GATE LIGHT CABLE. HIGH INTENSITY VERTICAL STRIPES. NEG P/N 8003-244NFS/CG, SSC T18115						
1	670-263738-4	EA	$458.43	$458.43	GATE ARM, FIBERGLASS-ALUMINUM, 25-31 FT, INCLUDES GATE GUARD FOR GATE LIGHT CABLE. HIGH INTENSITY VERTICAL STRIPES. NEG P/N 8003-324NFS/CG, SSC						
1	670-696894-4	EA	$34,574.48	$34,574.48	GCP4000 - 2 TRK (2TC) - REDUNDANT - 40/40 AMP WIRED RACK EQUIP. FOR 6X8 XING SHELTER, (INCL. 2 TRK CHASSIS A80465, 4 TRK MODS. A80418, 2-SSCC A80405, 2 CPU A80403, 1 SEAR A80410, 1 DISPLAY A80407, , 2-40 AMP CHARGERS) IPN: 003131-4X						
2	670-930665-4	EA	$45.20	$90.40	INDUCTOR, SIMULATED TRACK SAFETRAN 8V617-1400						
1	670-477991-4	EA	$410.00	$410.00	KIT, GROUNDING ASSY FOR AL I/S INCLUDES 8 GRD RDS,200'#4WIRE,12 4 WIRE ONE-SHOTS. ERICO SBK206						

APPROVED BY STATE	APPROVED BY RAILROAD	CAR NUMBER	SEAL NUMBER

Location: MIAMISBURG OH S&E Proj. No.: 10.1383 AFE No.: F-00175-27-1 Drawing No.: 82112184

Store No.: P.O.Number: Date Required: Date Shipped: Vendor: Xorail

Qty.	Class-Item-CD	UI	Price per Item	Total Price	Item Description	Quantity Shipped	Quantity Installed Date Quan.	Date Quan.	Date Quan.	Quantity Returned (Credit)	Special Instructions
1	670-123298-4	EA	$345.97	$345.97	KIT, HARDWARE SUPPLIES REQUIRED X'ING P'CKAGES. WEB CONNECTORS FOR SHUNT(8EA) TAPE, AMPS,P'GUM PAINT,SLEEVES,TAGS,GLUE, 100 EA WHITE TAGS,)NE CAN BLUE MARKING PAINT ETC...						
2	670-764166-4	EA	$1,240.19	$2,480.38	LAMP ASSY, 5" MAST MTG. 2W IND. 20" BKGRD, FLX-12 W/BULB S'TRAN #042003-487XNS						
6	165-643547-4	EA	$5.97	$35.82	LAMP, 18 WATT 10 VOLT S-11 SC BAY 18S11/1SC CLEAR RWY SIGNAL UJ-71463 GE						
40	670-440826-4	EA	$2.22	$88.80	LINK, SAFETRAN 024620-1X INSL TESTING COMP 1 IN CENTER SIGNAL CIRCUITS CR 02-286662						
4	255-590880-4	EA	$16.72	$66.88	LOCK, AMERICAN LOCK MODEL H-10KA KEYED ALIKE TO *PRIVATE KEYWAY D456 AND STAMPED "NS SIG"*						
2	670-637778-4	EA	$1,325.00	$2,650.00	MAST, 5" ALUMINUM 13'10" WITH DOUBLE JCT. BOX BASE. S'TRAN P# 070519-11AX.						
2	670-850933-4	EA	$3,925.01	$7,850.02	MECHANISM, GATE MODEL S-60, WITH DEFROSTER AND MINI TRACKSIDE SENSOR S'TRAN # 0740007-X002B3						
3	670-000001-4	EA	$726.23	$2,178.69	MISC. EXPENSE, MATERAIL/FILL						
1	670-000007-4	EA	$307.02	$307.02	MISC. EXPENSE, TRACK WORK (I.E. INS JTS, RODS, ETC.)						
1	000-000000-4	EA	$5,000.00	$5,000.00	MISC. EXPENSE, UNDERGROUND BORING						
4	670-001347-4	EA	$57.10	$228.40	PACKAGE, HARDWARE SIGN 5 IN. MOUNTING, SERRMI A1250-5, HARMON @200965-000, OR						
1	255-646807-4	EA	$31.19	$31.19	PADLOCK, SAFETRAN PART NO. 030399-29X SCREW TYPE FOR CIR CONTROLLER AND BTY. BOX						
1	670-514605-4	EA	$11.11	$11.11	PINNACLE, W-C SECT 1-11, 4"& 5" REF K1 110-8 OR SAFETRAN NO. @035045-503X						
4	670-259211-4	EA	$47.25	$189.00	PLUG BOARD KIT, TYPE B-1 & VOLTAGE TEST TERMINAL, SAFETRAN 420000-75X						
1	165-902002-4	EA	$303.43	$303.43	PROTECTOR, SURGE 120/240VAC, ERICO P/N EPD120/240TDFL						
5	465-002899-4	EA	$40.24	$201.20	REEL, CABLE DISPOSABLE FOR CROSSING SIGNAL PACKAGES						
4	670-742096-4	EA	$43.68	$174.72	RELAY INTERFACE PROBE, ULTRATECH PN 16031-00						

APPROVED BY STATE	APPROVED BY RAILROAD	CAR NUMBER	SEAL NUMBER

Location: MIAMISBURG OH S&E Proj. No.: 10.1383 AFE No.: F-00175-27-1 Drawing No.: 82112184

Store No.: P.O.Number: Date Required: Date Shipped: Vendor: Xorail

Qty.	Class-Item-CD	UI	Price per Item	Total Price	Item Description	Quantity Shipped	Quantity Installed Date Quan.	Date Quan.	Date Quan.	Quantity Returned (Credit)	Special Instructions
1	670-024861-4	EA	$437.35	$437.35	RELAY RACK, SWING, FARADAY SHELTER FOR EIGHT B1 RELAYS, SAFETRAN P/N 057883-1X						
4	670-707995-4	EA	$510.12	$2,040.48	RELAY, TYPE B1, NEV LINE, 900 OHMS,.008 AMPERES GRS A62-308 OR SAFETRAN @400003						
2	435-805560-4	EA	$2.78	$5.56	SAND, 25LB BAG FOR CABLE ENTRANCE INTO THE SHELTER						
1	670-027556-4	EA	$2,629.77	$2,629.77	SEARIII, ACCESSORY PACKAGE, W/2-ILOD, 1-E-BELL, 2-GTS, 1-GFT, 1-VHFC, WITHOUT MTSS/SEAR UNIT						
1	670-749325-4	EA	$226.97	$226.97	SHELF, FOLDING, FOR LAPTOP USE IN FARADAY 6X8 SHELTER, SAFETRAN 052852-128X						
1	670-756057-4	EA	$9,808.80	$9,808.80	SHELTER, 6'X8' ALUMN FARADAY W/CABLE CHUTES BEHIND TERMINAL BOARD, W /2EA EQUIPMENT RACKS, W/GEN RECEPTICAL, BREAKER BOX, GFI OUTLET FOR LAPTOP SHELF SAFETRAN 058400-68-86						
4	670-586967-4	EA	$42.98	$171.92	SHUNT COVER W/LAG SCREWS, 19"X19", SERRMI #40271, ORDER 1 PER SHUNT						
4	670-688850-4	EA	$369.89	$1,479.56	SHUNT, MULTI-FREQ. #62775-3497 SAFETRAN NARROW BAND						
2	670-393331-4	EA	$37.43	$74.86	SIGN CROSSING MALFUNCTION ASSEMBLY FOR 4" AND 5" MAST, SAFETRAN #T17215						
2	670-554843-4	EA	$77.05	$154.10	SIGN, 2 TRACK SIGN, HIGH INTENSITY, SAFETRAN #035207-2HX						
2	670-016346-4	EA	$143.23	$286.46	SIGN, X-BUCK, HI-INTENSIVE REFLECTIVE FRT. & BACK FOR ALL STATES, SAFETRAN# 035200-91X						
1	670-330382-4	RL	$18.06	$18.06	TAPE, THOR 3" DURATEC, ORANGE 1000' LENGTHS. "WARNING STOP DIGGING"						
54	670-478560-4	EA	$20.56	$1,110.24	TERMINAL BLOCK, ERICO 4 POST P/N B2700A2C1WH W/HARDWARE LESS LIGHTNING ARRESTOR						
4	610-065626-4	EA	$18.18	$72.72	ULTRA-TECH 15206-01 CONNECTIVITY BLOCK FOR GRS B1 RELAY						
4	670-007238-4	EA	$117.04	$468.16	UNIT, THE INSTALLATION AND WIRING OF A DEVICE WHICH REQUIRE A MINIMUM OF FOUR WIRE CONNECT-						
1	450-986008-4	EA	$30.45	$30.45	WRENCH, TEST POST TYPE B DWG 55393-3, GR.1						

Total Material: $99,598.74

APPROVED BY STATE	APPROVED BY RAILROAD	CAR NUMBER	SEAL NUMBER

SH. NO.	CONTENTS
NX1	INDEX SHEET
1	LAYOUT
2	PROFILE
3	CABLE PLAN
4	LOAD CENTER WIRING
5	B12 & B16 RECTIFIER HOOK-UP
6	4000 GCP 2-TK CHASSIS & MODULE LAYOUT
7	4000 GCP PROGRAMMING SETUP
8	4000 GCP PROGRAMMING SETUP
9	CONNECTORS FOR MODULES (A80418)
10	CPU MODULE,SEAR III, GFT & VHF HOOK-UPS
11	SEAR III PROGRAMMING SETUP
12	CONNECTORS FOR SSCC#1 MODULE, ILOD#1 HOOK-UP
13	CONNECTORS FOR SSCC#2 MODULE, ILOD#2 HOOK-UP
14	DAX CIRCUITS
15	"A" FLASHER AND GATE LIGHTS
16	"B" FLASHER AND GATE LIGHTS
17	BACKBOARD DETAIL - 1A & 1B
18	REAR BACKBOARD DETAIL - 1A & 1B
19	BACKBOARD DETAIL - 1C
20	FARADAY SHIELD DETAIL - 1A & 1B
21	FARADAY SHIELD DETAIL - 1C
22	6'X8' HOUSE - SIDE "C"
23	6'X8' HOUSE - SIDE "A"
24	6'X8' HOUSE (SIDE "B" & TOP VIEW)

IN SERVICE _____ _____
SIGNED DATE

☐ S&E ENGINEERING COPY
☐ CONSTRUCTION OFFICE COPY
RETURN TO S&E ENG. AFTER COMPLETION
☐ FIELD COPY
RETURN TO CASE AFTER COMPLETION
☐ PROJECT ENGINEER COPY

PROJECT #10.1383

INDEX SHEET

FILE No. CX0117936

DESIGNED BY:	
JLM	07-16-12
DRAWN BY:	
XRL	07-16-12
CHECKED BY:	
PEH	07-26-12
IN SERVICE:	
	- -

NORFOLK SOUTHERN

OFFICE OF ASS'T. VICE PRESIDENT COMM. & SIGNAL, ATLANTA, GA.

M.P.: CJ-218.50

MIAMISBURG, OH
FLGS AT LOCK ST

DAYTON DISTRICT

FILE No. R-

CADD or DWG. No. 82112184.NX1

SHEET No. 1 of 1

REVISION INITIALS

PROPERTY
PENNSYLVANIA R.R.

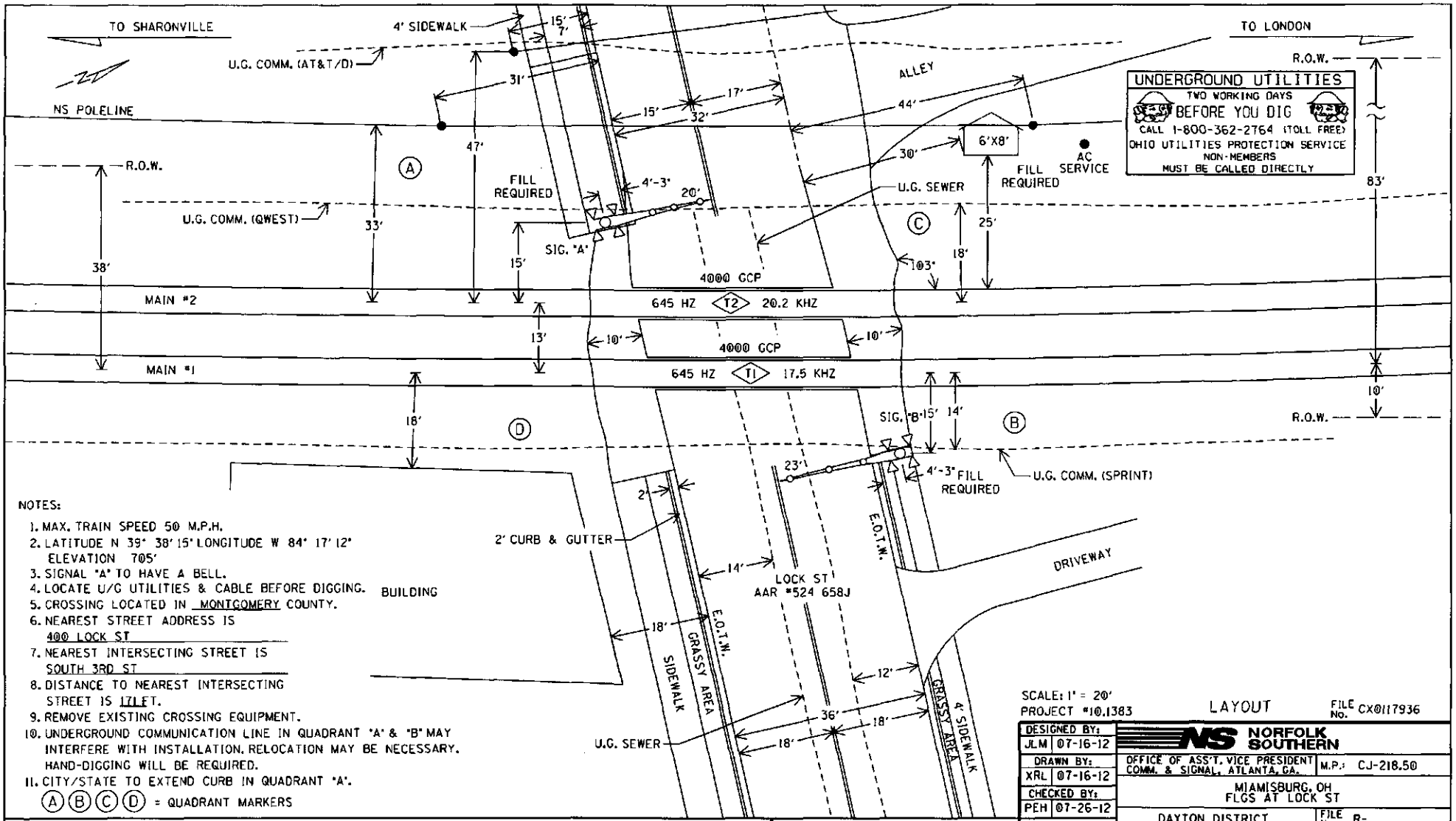

NOTES:

1. MAX. TRAIN SPEED 50 M.P.H.
2. LATITUDE N 39° 38' 15" LONGITUDE W 84° 17' 12"
   ELEVATION 705'
3. SIGNAL "A" TO HAVE A BELL.
4. LOCATE U/G UTILITIES & CABLE BEFORE DIGGING.
5. CROSSING LOCATED IN MONTGOMERY COUNTY.
6. NEAREST STREET ADDRESS IS
   400 LOCK ST
7. NEAREST INTERSECTING STREET IS
   SOUTH 3RD ST
8. DISTANCE TO NEAREST INTERSECTING
   STREET IS 171 FT.
9. REMOVE EXISTING CROSSING EQUIPMENT.
10. UNDERGROUND COMMUNICATION LINE IN QUADRANT "A" & "B" MAY INTERFERE WITH INSTALLATION. RELOCATION MAY BE NECESSARY. HAND-DIGGING WILL BE REQUIRED.
11. CITY/STATE TO EXTEND CURB IN QUADRANT "A".

(A) (B) (C) (D) = QUADRANT MARKERS

SCALE: 1" = 20'
PROJECT #10.1383

LAYOUT

FILE No. CX0117936

DESIGNED BY: JLM 07-16-12	NORFOLK SOUTHERN
DRAWN BY: XRL 07-16-12	OFFICE OF ASS'T. VICE PRESIDENT COMM. & SIGNAL, ATLANTA, GA. — M.P.: CJ-218.50
CHECKED BY: PEH 07-26-12	MIAMISBURG, OH FLGS AT LOCK ST
IN SERVICE: - -	DAYTON DISTRICT — FILE No. R-
	CADD or DWG. No. 82112184.01 — SHEET No. 1 of 24

REVISION INITIALS

PROPERTY
PENNSYLVANIA R.R.

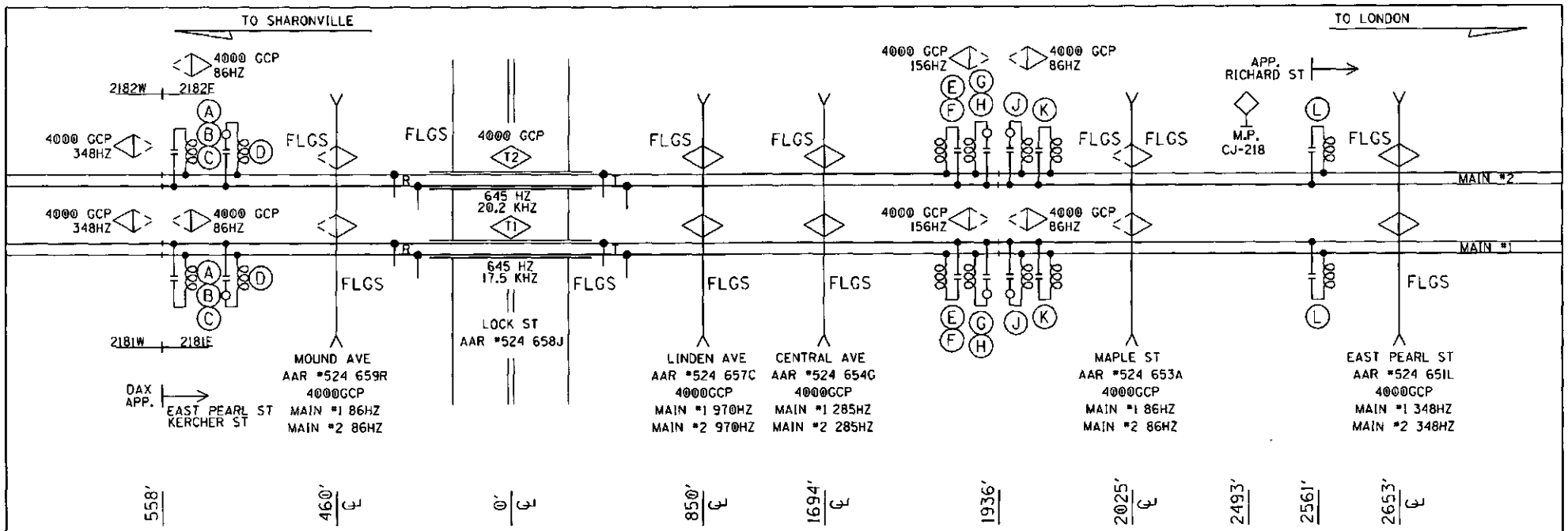

(A)- MF-NBS 62775-8621 (156HZ)

(B)- MF-NBS 62775-3497 (970HZ)

(C)- MF-NBS 62775-1543 (285HZ)

(D)- MF-NBS 62775-3497 (645HZ) W/8V617-1400

(E)- MF-NBS 62775-8621 (86HZ)

(F)- MF-NBS 62775-3497 (645HZ)

(G)- MF-NBS 62775-3497 (970HZ) W/8V617-0400

(H)- MF-NBS 62775-1543 (285HZ) W/8V617-2200

(J)- MF-NBS 62775-1543 (348HZ) W/8V617-2000

(K)- MF-NBS 62775-3497 (525HZ)

(L)- MF-NBS 62775-1543 (211HZ)

PROFILE

DESIGNED BY: JLM 07-16-12	NORFOLK SOUTHERN	
DRAWN BY: XRL 07-16-12	OFFICE OF ASS'T. VICE PRESIDENT COMM. & SIGNAL, ATLANTA, GA.	M.P.: CJ-218.50
CHECKED BY: PEH 07-26-12	MIAMISBURG, OH FLGS AT LOCK ST	
IN SERVICE: - -	DAYTON DISTRICT	FILE No. R-
	CADD or DWG. No. 82112184.02	SHEET No. 2 of 24

REVISION INITIALS

PROPERTY PENNSYLVANIA R.R.

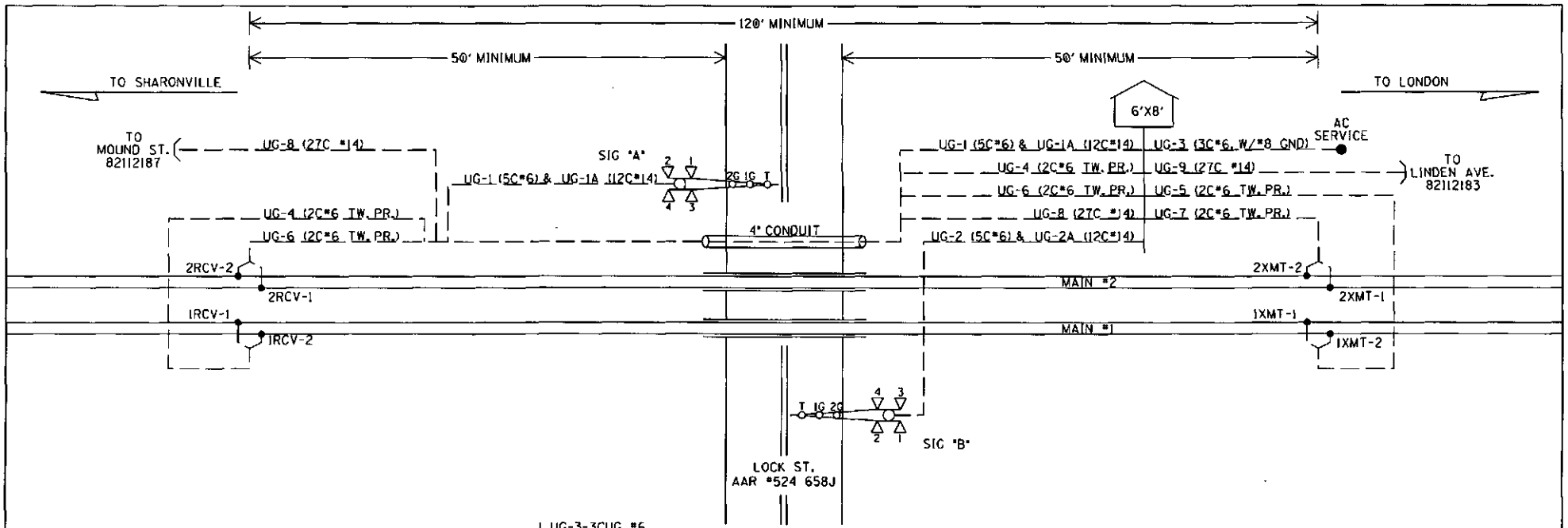

UG-1-5CUG #6
AEC
AEZ
AEB
BI6-A
NI6-A

UG-2-5CUG #6
BEC
BEZ
BEB
BI6-B
NI6-B

UG-1A-12CUG #14
AXG
NAXG
AXX
1AXX
XGP1
AMTSS
AGD
AGBXI20
AGNXI20
SPARE
SPARE

UG-2A-12CUG #14
BXG
NBXG
BXX
1BXX
XGP1
XGP
BMTSS
BGD
BGBXI20
BGNXI20
SPARE
SPARE

UG-3-3CUG #6 W/#8 GND
BXI20-A
BXI20-B
NXI20
GND

UG-4-TW. PR. #6
1RCV-1
1RCV-2

UG-5-TW. PR. #6
1XMT-1
1XMT-2

UG-6-TW. PR. #6
2RCV-1
2RCV-2

UG-7-TW. PR. #6
2XMT-1
2XMT-2

UG-8-27CUG #14
LOC-1WDAXP
NLOC-1WDAXP
LOC-2WDAXP
NLOC-2WDAXP
CEN-1WDAXP
NCEN-1WDAXP
CEN-2WDAXP
NCEN-2WDAXP
LIN-1WDAXP
NLIN-1WDAXP
LIN-2WDAXP
NLIN-2WDAXP
MAP-1WDAXP
NMAP-1WDAXP
MAP-2WDAXP
NMAP-2WDAXP
MOU-1EDAXP
NMOU-1EDAXP
MOU-2EDAXP
NMOU-2EDAXP
SPARE
SPARE
SPARE
SPARE
SPARE
SPARE
SPARE

UG-9-27CUG #14
LOC-1EDAXP
NLOC-1EDAXP
LOC-2EDAXP
NLOC-2EDAXP
CEN-1WDAXP
NCEN-1WDAXP
CEN-2WDAXP
NCEN-2WDAXP
LIN-1WDAXP
NLIN-1WDAXP
LIN-2WDAXP
NLIN-2WDAXP
MAP-1WDAXP
NMAP-1WDAXP
MAP-2WDAXP
NMAP-2WDAXP
MOU-1EDAXP
NMOU-1EDAXP
MOU-2EDAXP
NMOU-2EDAXP
SPARE
SPARE
SPARE
SPARE
SPARE
SPARE
SPARE

CABLE PLAN

DESIGNED BY: JLM 07-16-12	NORFOLK SOUTHERN	
DRAWN BY: XRL 07-16-12	OFFICE OF ASS'T. VICE PRESIDENT COMM. & SIGNAL, ATLANTA, GA.	M.P.: CJ-218.50
CHECKED BY: PEH 07-26-12	MIAMISBURG, OH FLGS AT LOCK ST	
IN SERVICE: - -	DAYTON DISTRICT	FILE No. R-
	CADD or DWG. No. 82112184.03	SHEET No. 3 of 24

REVISION INITIALS

PROPERTY
PENNSYLVANIA R.R.

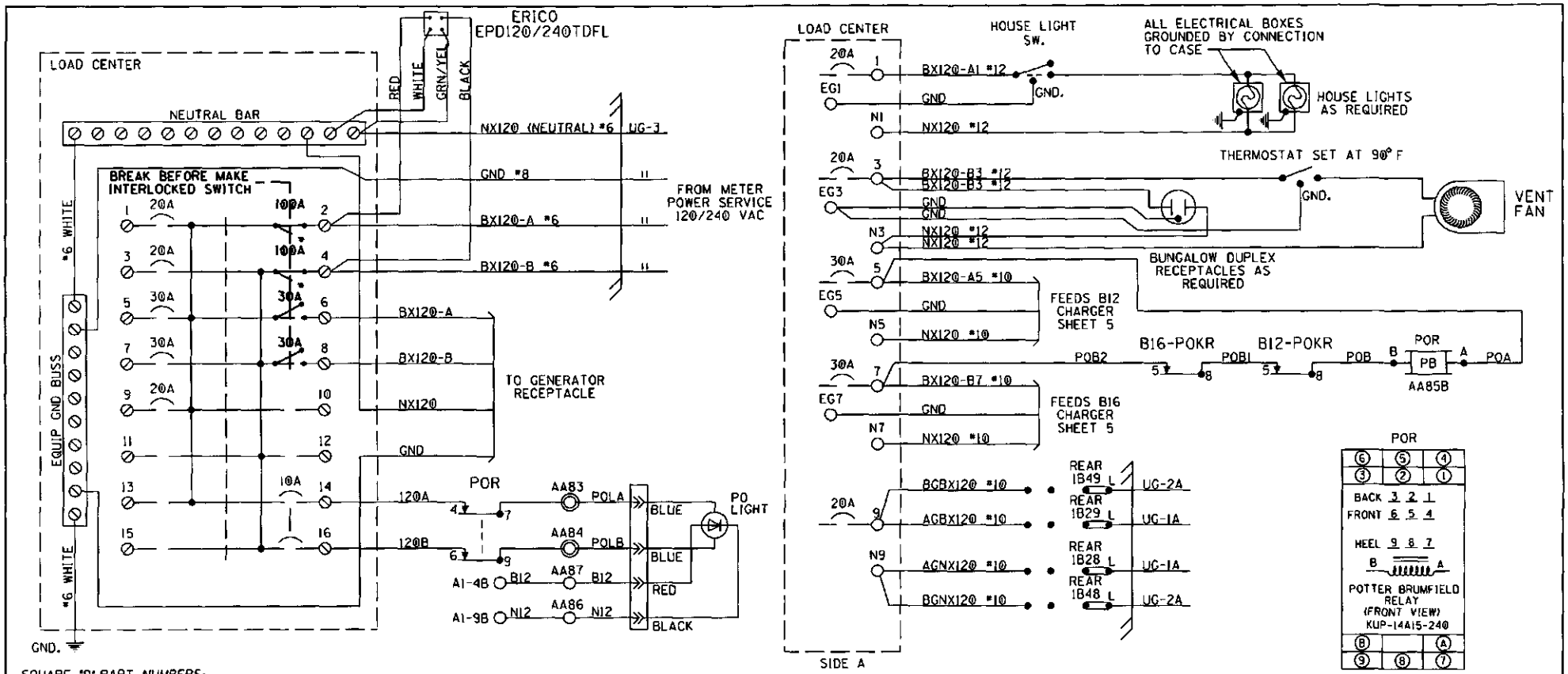

SQUARE "D" PART NUMBERS:

LOAD CENTER——Q0116L125G
10A 1P CIR BKR —Q0110
10A 2P CIR BKR —Q0210
20A 1P CIR BKR —Q0120
30A 1P CIR BKR —Q0130
30A 2P CIR BKR —Q0230
60A 2P CIR BKR —Q0260
100A 2P CIR BKR—Q02100
MECH INTERLOCK——PK4DTIM4LA
GENERATOR RECEPTACLE:
MALE CONNECTOR - NEMA L1430-FI

NOTE:
ALL AC WIRING IS TO BE IN METALLIC CONDUIT WITH NO EXPOSED TERMINALS. ALL AC 120V AND 240V EQUIPMENT IS TO BE PROPERLY GROUNDED.

LOAD CENTER WIRING

DESIGNED BY: JLM 07-16-12	NORFOLK SOUTHERN	
DRAWN BY: XRL 07-16-12	OFFICE OF ASS'T. VICE PRESIDENT COMM. & SIGNAL, ATLANTA, GA.	M.P.: CJ-218.50
CHECKED BY: PEH 07-26-12	MIAMISBURG, OH FLGS AT LOCK ST	
IN SERVICE: - -	DAYTON DISTRICT	FILE No. R-
	CADD or DWG. No. 82112184.04	SHEET No. 4 of 24

REVISION INITIALS

PROPERTY
PENNSYLVANIA R.R.

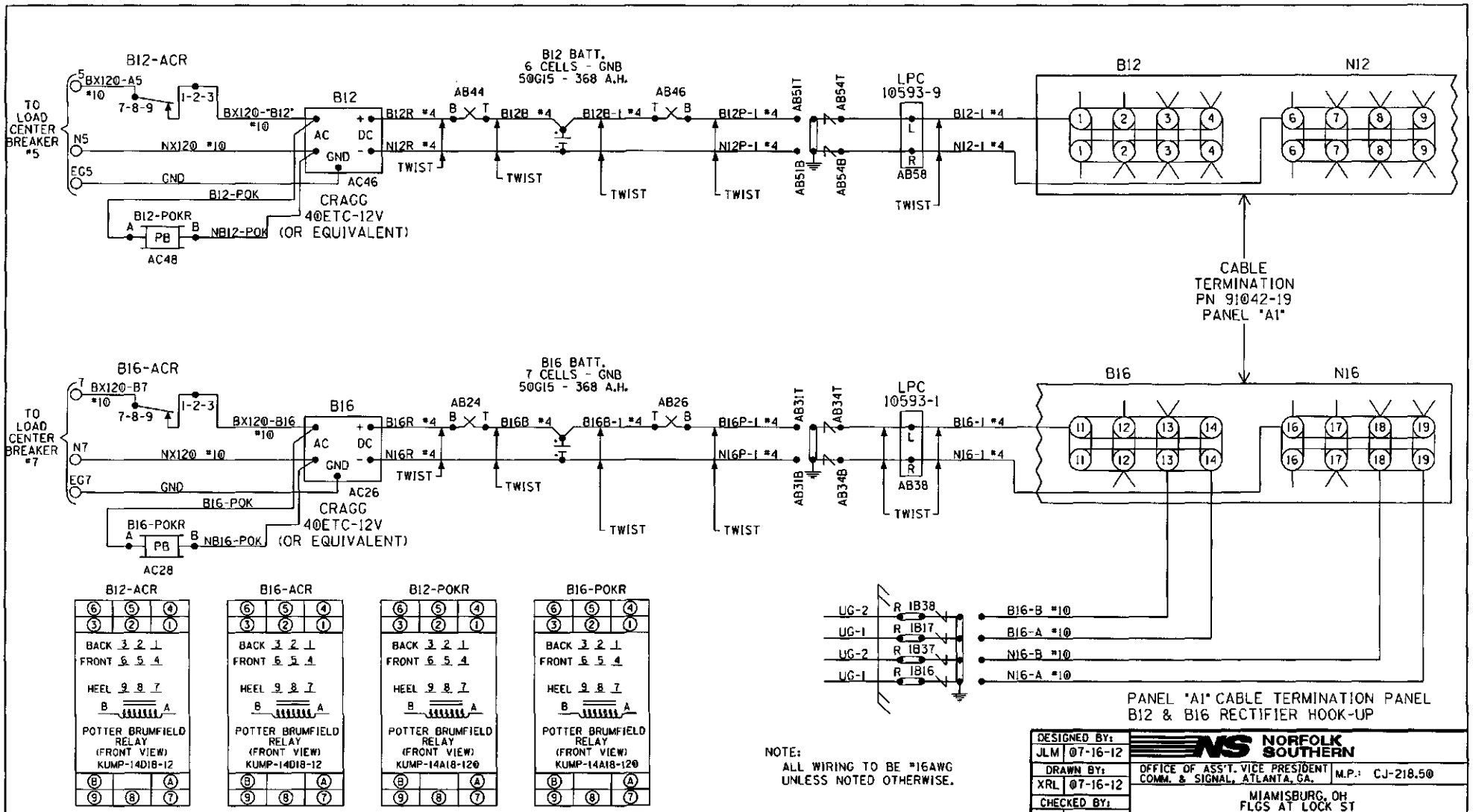

NOTE:
ALL WIRING TO BE #16AWG
UNLESS NOTED OTHERWISE.

DESIGNED BY: JLM	07-16-12
DRAWN BY: XRL	07-16-12
CHECKED BY: PEH	07-26-12
IN SERVICE:	- -

NORFOLK SOUTHERN

OFFICE OF ASS'T. VICE PRESIDENT COMM. & SIGNAL, ATLANTA, GA. — M.P.: CJ-218.50

MIAMISBURG, OH
FLGS AT LOCK ST

DAYTON DISTRICT — FILE No. R-

CADD or DWG. No. 82112184.05 — SHEET No. 5 of 24

REVISION INITIALS

PROPERTY
PENNSYLVANIA R.R.

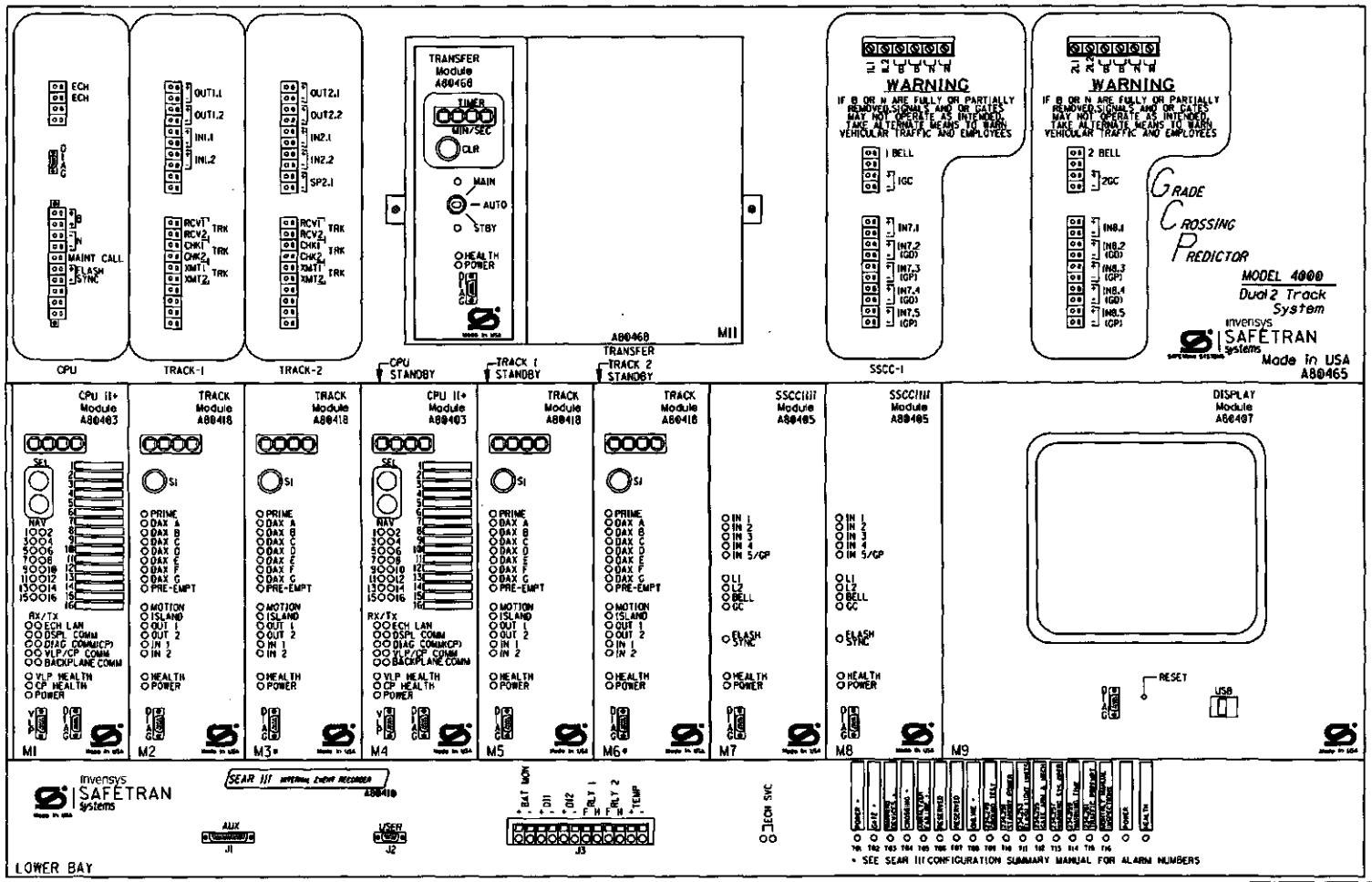

WARNING

REMOVAL OF THE SSCC1111 MODULE WILL CAUSE THE GATE(S) TO DROP BUT THE LIGHTS WILL NOT ACTIVATE

CAUTION

ASSURE CORRECT POLARITY OF THE SSCC1111 MODULE OR SEVERE DAMAGE WILL OCCUR.

ATTENTION!

ENSURE THE DISPLAY MODULE HEATER IS DISABLED. LEAVING THE DISPLAY HEATER ENABLED WILL REDUCE THE AMOUNT OF BATTERY STANDBY TIME IN THE EVENT OF AN AC POWER FAILURE.

HEATER FUNCTION IS JUMPER SELECTABLE ON THE DISPLAY MODULE BOARD.
THREE OPTIONS ARE AVAILABLE:
NORMAL LCD HTR (DEFAULT)
HI CURRENT
NO JUMPER (HEATER DISABLED)

** MAIN AND STANDBY MAY USE RIO IN TRACK 2 SLOTS (M3 AND M6)

PANEL "A2" 4000 GCP REDUNDANT
2-TK CHASSIS AND MODULE LAYOUT

DESIGNED BY: JLM 07-16-12	NORFOLK SOUTHERN		
DRAWN BY: XRL 07-16-12	OFFICE OF ASS'T. VICE PRESIDENT COMM. & SIGNAL, ATLANTA, GA.	M.P.: CJ-218.50	
CHECKED BY: PEH 07-26-12	MIAMISBURG, OH FLGS AT LOCK ST		
IN SERVICE: - -	DAYTON DISTRICT	FILE No. R-	
	CADD or DWG. No. 82112184.06	SHEET No. 6 of 24	

REVISION INITIALS									

PROPERTY
PENNSYLVANIA R.R.

Program Report

Location and SIN

DOT Number: 524658J
Milepost Number: CJ-218.50
Site Name: LOCK ST

SIN: 755023404616

MCF and Template Selection

MCF Name: GCP-T6X-02-1.mcf
MCF Revision: 021
MCFCRC: 6076E435

Template = 1A:6 Trk Bi

Check Numbers

Office Check No. (DT 4.6.0): 05BC4740
Office Check Number: 05BC4740
Config. Check Number: 309F2860
(Based on MCF Revision 021)

Program

BASIC: module configuration
Track 1 Slot = Track
Track 2/RIO 1 Slot = Track
Track 3 Slot = Not Used
Track 4 Slot = Not Used
Track 5/RIO 2 Slot = Not Used
Track 6/RIO 3 Slot = Not Used
SSCC-1 Slot = SSCC3i
SSCC-2 Slot = SSCC3i
SEAR Used = Yes

BASIC: MS/GCP operation
Track 1 : MS/GCP Operation = Yes
Track 2 : MS/GCP Operation = Yes

BASIC: island operation
Track 1 : Island Used = Internal
Track 2 : Island Used = Internal

BASIC: preemption
Preempt Logic = No

BASIC: radio Dax links
Radio DAX link A Used = No
Radio DAX link B Used = No

BASIC: VitalComms links
VitalComms link 1 Used = No
VitalComms link 2 Used = No

PREDICTORS: track 1
Track 1 : Prime Used = Yes
Track 1 : Dax A Used = No
Track 1 : Dax B Used = No
Track 1 : Dax C Used = No
Track 1 : Dax D Used = No
Track 1 : Dax E Used = No
Track 1 : Dax F Used = No
Track 1 : Dax G Used = No

PREDICTORS: track 2
Track 2 : Prime Used = Yes
Track 2 : Dax A Used = No
Track 2 : Dax B Used = No
Track 2 : Dax C Used = No
Track 2 : Dax D Used = No
Track 2 : Dax E Used = No
Track 2 : Dax F Used = No
Track 2 : Dax G Used = No

GCP: track 1
Track 1 : GCP Freq Category = Standard
Track 1 : GCP Frequency = 645 Hz
Track 1 : Approach Distance = 1867 ft
Track 1 : Uni/Bi/Sim-Bidirni = Bidirni
Track 1 : GCP Transmit Level = High
Track 1 : Island Connection = Isl1
Track 1 : Island Distance = 138 ft
Track 1 : Computed Distance = 9999 ft
Track 1 : Linearization Steps = 100

GCP: track 1 enhanced det
Track 1 : Inbound PS Sensitivity = Off
Track 1 : Speed Limiting Used = Yes
Track 1 : Outbound False Act Lvl = Normal
Track 1 : Outbound PS Timer = 20 sec
Track 1 : Trailing Switch Logic = On
Track 1 : Post Joint Detn Time = 15 sec
Track 1 : Adv Appr Predn = No
Track 1 : CancelPickup Delay = This Isl

GCP: track 1 prime
Track 1 : Prime Warning Time = 30 sec
Track 1 : Prime Offset Distance = 0 ft
Track 1 : Switch MS EZ Level = 10
Track 1 : Prime MS/GCP Mode = Pred
Track 1 : Prime Pickup Delay = 15 sec
Track 1 : Prime UAX = IP
Track 1 : Prime UAX Pickup = 25 sec

GCP: track 1 pos start
Track 1 : Positive Start = Off
Track 1 : Sudden Shnt Det Used = No
Track 1 : Low EZ Detection Used = No

GCP: track 1 MS Control
Track 1 : MS/GCP CtrlIP Used = No
Track 1 : MS Sensitivity Level = 0
Track 1 : Compensation Level = 1300
Track 1 : Warn Time-Ballast Comp = High
Track 1 : Low EX Adjustment = 39
Track 1 : Bidirn Dax Passthru = No
Track 1 : False Act on Train Stop = No
Track 1 : EX Limiting Used = Yes
Track 1 : EZ Correction Used = Yes

GCP: track 2
Track 2 : GCP Freq Category = Standard
Track 2 : GCP Frequency = 645 Hz
Track 2 : Approach Distance = 1867 ft
Track 2 : Uni/Bi/Sim-Bidirni = Bidirni
Track 2 : GCP Transmit Level = High
Track 2 : Island Connection = Isl2
Track 2 : Island Distance = 138 ft
Track 2 : Computed Distance = 9999 ft
Track 2 : Linearization Steps = 100

GCP: track 2 enhanced det
Track 2 : Inbound PS Sensitivity = Off
Track 2 : Speed Limiting Used = Yes
Track 2 : Outbound False Act Lvl = Normal
Track 2 : Outbound PS Timer = 20 sec
Track 2 : Trailing Switch Logic = On
Track 2 : Post Joint Detn Time = 15 sec
Track 2 : Adv Appr Predn = No
Track 2 : CancelPickup Delay = This Isl

GCP: track 2 prime
Track 2 : Prime Warning Time = 30 sec
Track 2 : Prime Offset Distance = 0 ft
Track 2 : Switch MS EZ Level = 10
Track 2 : Prime MS/GCP Mode = Pred
Track 2 : Prime Pickup Delay = 15 sec
Track 2 : Prime UAX = IP
Track 2 : Prime UAX Pickup = 25 sec

GCP: track 2 pos start
Track 2 : Positive Start = Off
Track 2 : Sudden Shnt Det Used = No
Track 2 : Low EZ Detection Used = No

GCP: track 2 MS Control
Track 2 : MS/GCP CtrlIP Used = No
Track 2 : MS Sensitivity Level = 0
Track 2 : Compensation Level = 1300
Track 2 : Warn Time-Ballast Comp = High
Track 2 : Low EX Adjustment = 39
Track 2 : Bidirn Dax Passthru = No
Track 2 : False Act on Train Stop = No
Track 2 : EX Limiting Used = Yes
Track 2 : EZ Correction Used = Yes

ISLAND: track 1
Track 1 : IslFrequency = 17.5 kHz
Track 1 : Pickup Delay (2s +) = 0 sec
Track 1 : IslEnable IP Used = No

ISLAND: track 2
Track 2 : IslFrequency = 20.2 kHz
Track 2 : Pickup Delay (2s +) = 0 sec
Track 2 : IslEnable IP Used = No

AND: track Anding
AND 1 XR Used = Yes
AND 2 Used = No
AND 3 Used = No
AND 4 Used = No
AND 5 Used = No
AND 6 Used = No
AND 7 Used = No
AND 8 Used = No

AND: AND 1 XR
AND 1 XR Track 1 = Prime
AND 1 XR Track 2 = Prime
AND 1 Enable Used = Yes
And 1 Enable Pickup = 5 sec
AND 1 Enable Drop = 0 sec
AND 1 Wrap Used = No

ADVANCED: MS restart
MS/GCP Restart Used = No

ADVANCED: out of service
OOS Control = Display+OOS IPs
OOS Timeout = Yes
OOS Timeout = 1 hrs

ADVANCED: out of service 2
T1 OOS Control = OOS Input 1
T2 OOS Control = OOS Input 1

ADVANCED: track wrap circuits
Wrap LOS Timer = 5 sec
Track 1 Wrap Used = No
Track 2 Wrap Used = No

ADVANCED: trk 1 overrides
Track 1 : AllPredictors Override Used = No

ADVANCED: trk 2 overrides
Track 2 : AllPredictors Override Used = No

4000 GCP PROGRAMMING SETUP

DESIGNED BY: JLM 07-16-12	NORFOLK SOUTHERN		
DRAWN BY: XRL 07-16-12	OFFICE OF ASS'T. VICE PRESIDENT COMM. & SIGNAL, ATLANTA, GA.	M.P.: CJ-218.50	
CHECKED BY: PEH 07-26-12	MIAMISBURG, OH FLGS AT LOCK ST		
IN SERVICE: - -	DAYTON DISTRICT	FILE No. R-	
	CADD or DWG. No. 82112184.07	SHEET No. 7 of 24	

REVISION INITIALS

PROPERTY
PENNSYLVANIA R.R.

ADVANCED: OR logic
OR 1 Used = No
OR 2 Used = No
OR 3 Used = No
OR 4 Used = No

ADVANCED: Internal I/O 1
Pass Thrus = No
Int.1 Sets = Not Used
Int.1 Set by = Not Used
Int.2 Sets = Not Used
Int.2 Set by = Not Used
Int.3 Sets = Not Used
Int.3 Set by = Not Used
Int.4 Sets = Not Used
Int.4 Set by = Not Used

ADVANCED: Internal I/O 2
Int.5 Sets = Not Used
Int.5 Set by = Not Used
Int.6 Sets = Not Used
Int.6 Set by = Not Used
Int.7 Sets = Not Used
Int.7 Set by = Not Used
Int.8 Sets = Not Used
Int.8 Set by = Not Used

ADVANCED: Internal I/O 3
Int.9 Sets = Not Used
Int.9 Set by = Not Used
Int.10 Sets = Not Used
Int.10 Set by = Not Used
Int.11 Sets = Not Used
Int.11 Set by = Not Used
Int.12 Sets = Not Used
Int.12 Set by = Not Used

ADVANCED: Internal I/O 4
Int.13 Sets = Not Used
Int.13 Set by = Not Used
Int.14 Sets = Not Used
Int.14 Set by = Not Used
Int.15 Sets = Not Used
Int.15 Set by = Not Used
Int.16 Sets = Not Used
Int.16 Set by = Not Used

ADVANCED: site options
Daylight Savings = On
Units = Standard
Maint CallRpt IP Used = No
Emergency Activate IP = No
EZ/EX Logging = Change
EZ/EX Point Change = 3

SSCC
Gates Used = Yes
SSCC1+2 GPs Coupled = Yes
Min Activation = 0 sec
Rmt Activation Cancel= 2 min
BellOn Gate Rising = No
Mute BellOn Gate Down = No
SSCCIV Controller Used = No

SSCC: 1
SSCC-1 Activation = AND 1 XR
SSCC-1 Gate Delay = 4 sec
SSCC-1 Number of GPs = 1
SSCC-1 Number of GDs = 2
SSCC 1 : Flash Rate = 40
SSCC 1 : Low Battery Detection = No
SSCC 1 : Flash Sync = master
SSCC 1 : Invert Gate Output = No
SSCC 1 : Lamp NeutralTest = On
Aux-1 Xng CtrlUsed = No

SSCC: 2
SSCC-2 Activation = AND 1 XR
SSCC-2 Gate Delay = 4 sec
SSCC-2 Number of GPs = 0
SSCC-2 Number of GDs = 0
SSCC 2 : Flash Rate = 40
SSCC 2 : Low Battery Detection = No
SSCC 2 : Flash Sync = slave
SSCC 2 : Invert Gate Output = No
SSCC 2 : Lamp NeutralTest = On
Aux-2 Xng CtrlUsed = No

OUTPUT: assignment page 1
OUT 1.1 = Not Used
OUT 1.2 = Not Used
OUT 2.1 = Not Used
OUT 2.2 = Not Used

INPUT: assignment page 1
IN 1.1 = T1 Prime UAX
IN 1.2 = Not Used
IN 2.1 = T2 Prime UAX
IN 2.2 = Not Used

IO: assignment SSCC
OUT GC 1 = Gate Output 1
OUT GC 2 = Gate Output 2
IN 7.1 = Not Used
IN 7.2 = GD 1.2
IN 7.3 = AND 1 XR Enable
IN 7.4 = GD 1.1
IN 7.5 = GP 1.1
IN 8.1 = Not Used
IN 8.2 = Out Of Service IP 1
IN 8.3 = Not Used
IN 8.4 = Not Used
IN 8.5 = Not Used

SEAR
SEAR Subnode = 3
DI 1 = Gnd Flt Tester 1
DI 2 = Not Used
Rly 1 = Ground Fault Test
Rly 2 = AC Control

SEAR: Inputs
SP 2.1 = POK 1
SP 3.1 = Not Used
SP 4.1 = Not Used
SP 5.1 = Not Used
SP 6.1 = Not Used

SEAR: slot 1-4 Inputs
IN 1.2 = Not Used
IN 2.2 = Not Used
IN 3.1 = Not Used
IN 3.2 = Not Used
IN 4.1 = Not Used
IN 4.2 = Not Used

SEAR: inputs slot 5
IN 5.1 = Not Used
IN 5.2 = Not Used

SEAR: Inputs slot 6
IN 6.1 = Not Used
IN 6.2 = Not Used

SEAR: slot 7-8 inputs
IN 7.1 = TSS 1
IN 8.1 = TSS 2
IN 8.3 = POK 2
IN 8.4 = Not Used
IN 8.5 = Not Used

SITE: programming
Radio Subnode = 1
Field Password = Off
Low Battery Enabled = Off

Configuration Package File

Filename: 82112184.pac

4000 GCP PROGRAMMING SETUP

DESIGNED BY: JLM 07-16-12	NORFOLK SOUTHERN		
DRAWN BY: XRL 07-16-12	OFFICE OF ASS'T. VICE PRESIDENT COMM. & SIGNAL, ATLANTA, GA.	M.P.: CJ-218.50	
CHECKED BY: PEH 07-26-12	MIAMISBURG, OH FLGS AT LOCK ST		
IN SERVICE: - -	DAYTON DISTRICT	FILE No. R-	
	CADD or DWG. No. 82112184.08	SHEET No. 8 of 24	

REVISION INITIALS

PROPERTY
PENNSYLVANIA R.R.

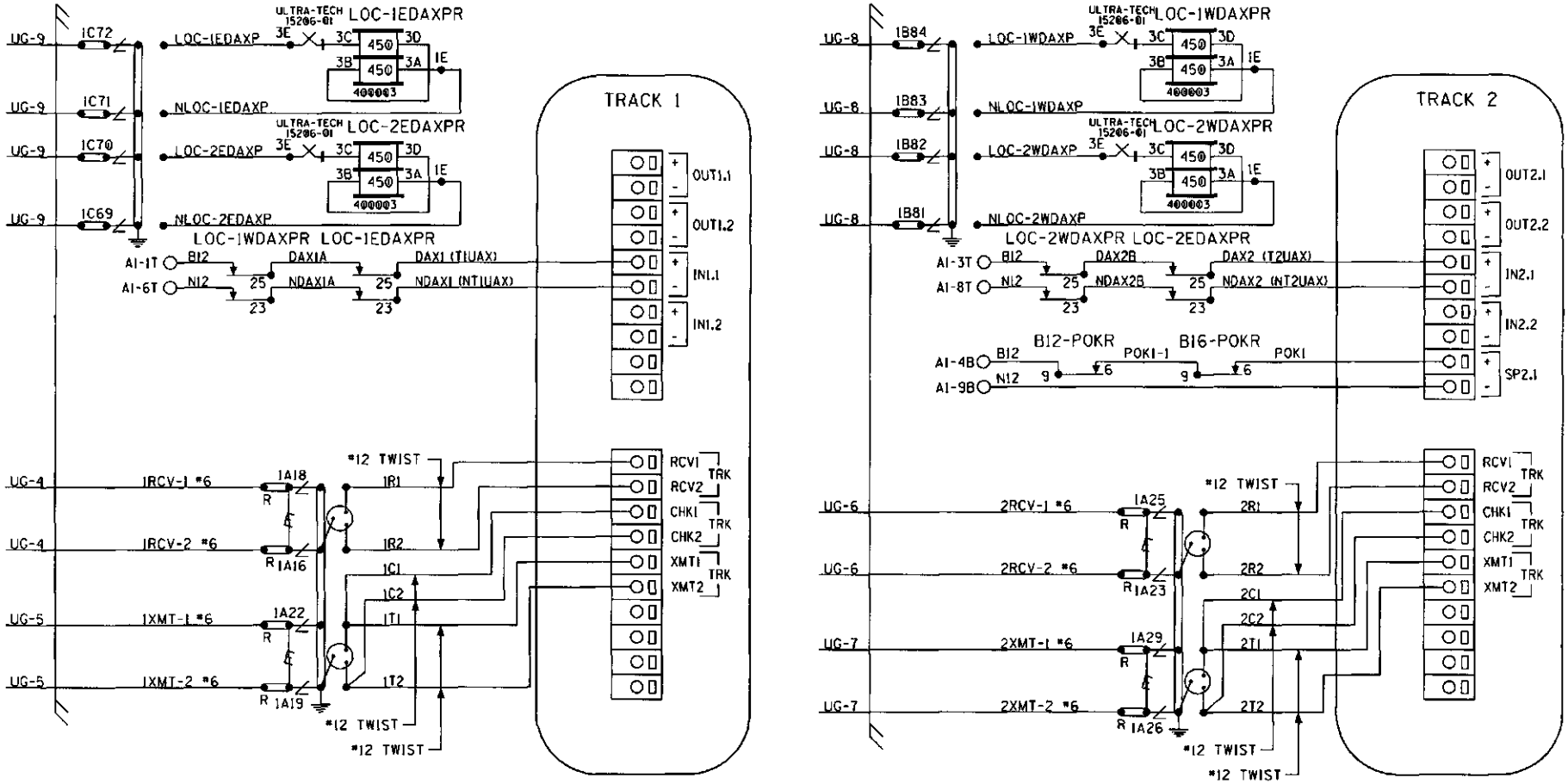

PANEL "A2" CONNECTORS FOR MODULES (A80418)

NOTE:
ALL WIRING TO BE #16AWG
UNLESS NOTED OTHERWISE.

DESIGNED BY: JLM 07-16-12	NORFOLK SOUTHERN		
DRAWN BY: XRL 07-16-12	OFFICE OF ASS'T. VICE PRESIDENT COMM. & SIGNAL, ATLANTA, GA.	M.P.: CJ-218.50	
CHECKED BY: PEH 07-26-12	MIAMISBURG, OH FLGS AT LOCK ST		
IN SERVICE: - -	DAYTON DISTRICT	FILE No. R-	
	CADD or DWG. No. 82112184.09	SHEET No. 9 of 24	

REVISION INITIALS

PROPERTY
PENNSYLVANIA R.R.

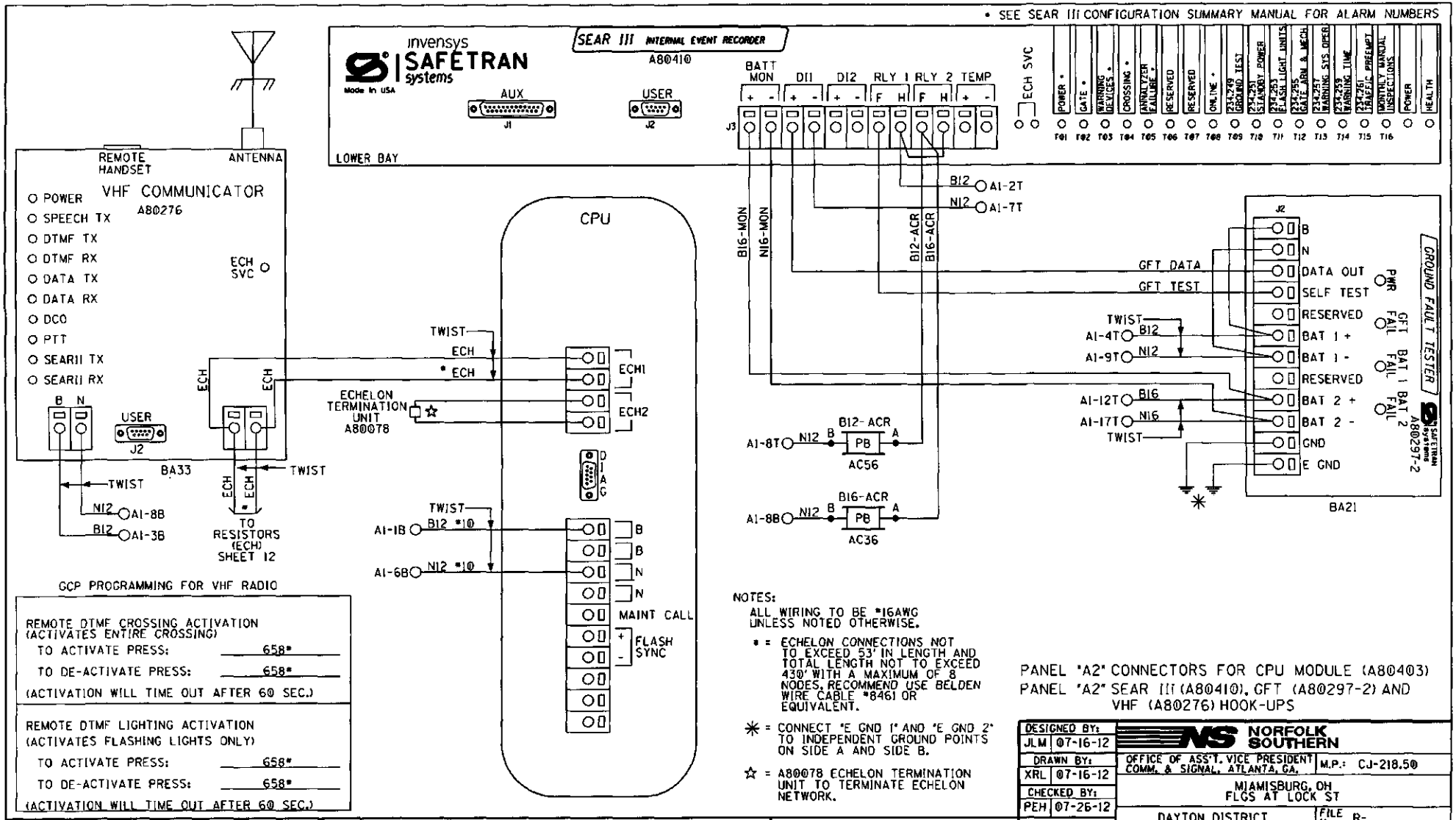

GCP PROGRAMMING FOR VHF RADIO

REMOTE DTMF CROSSING ACTIVATION
(ACTIVATES ENTIRE CROSSING)

TO ACTIVATE PRESS: 658*

TO DE-ACTIVATE PRESS: 658*

(ACTIVATION WILL TIME OUT AFTER 60 SEC.)

REMOTE DTMF LIGHTING ACTIVATION
(ACTIVATES FLASHING LIGHTS ONLY)

TO ACTIVATE PRESS: 658*

TO DE-ACTIVATE PRESS: 658*

(ACTIVATION WILL TIME OUT AFTER 60 SEC.)

NOTES:

ALL WIRING TO BE #16AWG UNLESS NOTED OTHERWISE.

* = ECHELON CONNECTIONS NOT TO EXCEED 53' IN LENGTH AND TOTAL LENGTH NOT TO EXCEED 430' WITH A MAXIMUM OF 8 NODES. RECOMMEND USE BELDEN WIRE CABLE #8461 OR EQUIVALENT.

✳ = CONNECT "E GND 1" AND "E GND 2" TO INDEPENDENT GROUND POINTS ON SIDE A AND SIDE B.

☆ = A80078 ECHELON TERMINATION UNIT TO TERMINATE ECHELON NETWORK.

PANEL "A2" CONNECTORS FOR CPU MODULE (A80403)
PANEL "A2" SEAR III (A80410), GFT (A80297-2) AND VHF (A80276) HOOK-UPS

DESIGNED BY: JLM 07-16-12	NORFOLK SOUTHERN		
DRAWN BY: XRL 07-16-12	OFFICE OF ASS'T. VICE PRESIDENT COMM. & SIGNAL, ATLANTA, GA.	M.P.: CJ-218.50	
CHECKED BY: PEH 07-26-12	MIAMISBURG, OH FLGS AT LOCK ST		
IN SERVICE: - -	DAYTON DISTRICT	FILE No. R-	
	CADD or DWG. No. 82112184.10	SHEET No. 10 of 24	

REVISION INITIALS

PROPERTY
PENNSYLVANIA R.R.

TO CONFIGURE SEAR III PRESS SITE SETUP KEY.
USE ARROW KEYS TO MAKE SELECTION.
PRESS ENTER AFTER SELECTION HAS BEEN MADE.

	SITE SET UP PROCEDURE	
	FUNCTION	LED DISPLAY
	DATE/TIME	
	AUTOMATIC DST ADJUSTMENT	YES
	TIME ZONE	EST
	SITE NAME	LOCK ST
	MILEPOST	CJ-218.50
	DOT *	524658J
	TESTER TYPE	CROSSING
	DATE FORMAT	MM-DD-YYYY
	TEMP FORMAT	FAHRENHEIT
	INDICATE HOLD (SEC)	0
	INDICATE REFRESH (SEC)	60 550 234 043
	SITE ATCS	7.550.234.046.03.01
	SITE TYPE	NO COMMUNICATION
***	OFFICE ATCS ADDRESS	2.550.00.0000
***	PRIMARY HOP ADDR	7.RRR.LLL.GGG.XX.XX
***	BACKUP HOP ADDR 1	7.RRR.LLL.GGG.XX.XX
***	BACKUP HOP ADDR 2	7.RRR.LLL.GGG.XX.XX
***	POLL ID	1
***	MODE	GEN/ATCS
***	WAMS XID	DISABLED
***	OFFICE COMM DEVICE	MCM (ECHELON)
***	RADIO ATCS ADDR	7.RRR.LLL.GGG.01.01
***	PHONE *	(OFFICE NUMBER)
***	INIT STRING	
***	FIELD COMM	NONE
****	USER PORT	BAUD 57600, N. 8. 1. NONE
****	AUX PORT	BAUD 9600, N. 8. 1. NONE

VERIFY NUMBER OF BULBS: SENSOR #1	
CURR 1: LAMP SET UP	4 BULBS
CURR 2: LAMP SET UP	4 BULBS

VERIFY NUMBER OF BULBS: SENSOR #2	
CURR 1: LAMP SET UP	4 BULBS
CURR 2: LAMP SET UP	4 BULBS

	CONTROL SYSTEM CONFIGURATION MENU QUESTIONS	
	THE QUESTION	SELECT FROM MENU OPTION
	RESET NAMES AND MODULES?	YES
	RAILROAD NUMBER	550
	CROSSING CONFIGURATION	NORMAL
	AND 1 USED AS XR?	YES
	AND 2 USED AS XR?	NO
	AND 3 USED AS XR?	NO
	AND 4 USED AS XR?	NO
	AND 5 USED AS XR?	NO
	AND 6 USED AS XR?	NO
	AND 7 USED AS XR?	NO
	AND 8 USED AS XR?	NO
*	XR CONTROLLED BY FOREIGN RR	
	ENTRANCE GATES	2
*	GATES CONTROLLED BY FOREIGN RR	
	GATE POSITION FAIL TIME (SECONDS)	20
	BATTERY BANKS	2
	BATTERY MON USED	YES
	INTERNAL CROSSING CONTROLLERS	2
	EXTERNAL CROSSING CONTROLLERS	0
	VHF COMMUNICATOR	YES
	DTMF ACTIVATION	YES
*****	ACTIVATION CODE	658
	ACTIVATION TIMEOUT (SECONDS)	60
	ILOD MODULES	2
	ANY LED BULBS USED	NO
	AUTO INSPECTIONS	NO
	BELL SENSORS	1
**	BELL SENSOR TSS1	YES
**	BELL SENSOR TSS2	NO
**	BELL SENSOR TSS3	NO
**	BELL SENSOR TSS4	NO
**	BELL SENSOR TSS5	NO
**	BELL SENSOR TSS6	NO
**	BELL SENSOR TSS7	NO
**	BELL SENSOR TSS8	NO

CONTROL SYSTEM CONFIGURATION MENU QUESTIONS (CONT.)	
BELL ON	GATES LOWERING
GFT'S	YES
BATTERIES ON GFT1	2
GATE TIP SENSORS	YES
RTU	NO
VHF VOICE CHANNEL	2
VHF DATA CHANNEL	2
USE CELL MODEM NON-CRITICAL FEATURE	NO
FULL APPROACH MOVES ALARM	ACTIVATE

PROGRAM MENU QUESTIONS	PROGRAM
EDIT DIGITAL INPUTS	NO
EDIT BATTERIES	NO
EDIT RELAYS	NO
EDIT INDICATOR LEDS	NO
EDIT TEST LEDS	NO
EDIT ILOD SENSORS	NO
EDIT VHF SETTINGS	NO
GCP4K ATCS SUBNODE	16

NOTES:

* = DISPLAYED IF CROSSING CONFIGURATION IS SPLIT GATE

** = OPTIONS: IF BELL SENSOR = 0, THEN BELL FIELDS ARE NOT USED.

*** = IF SITE TYPE = NO COMMUNICATION, THEN THESE OPTIONS ARE NOT DISPLAYED

**** = THESE SETTINGS SHOULD BE LEFT AT THE DEFAULT SETTING.

***** = USE LAST 3 NUMBERS FROM DOT NUMBER

SEAR III PROGRAMMING SETUP

DESIGNED BY: JLM 07-16-12	NORFOLK SOUTHERN	
DRAWN BY: XRL 07-16-12	OFFICE OF ASS'T. VICE PRESIDENT COMM. & SIGNAL, ATLANTA, GA.	M.P.: CJ-218.50
CHECKED BY: PEH 07-26-12	MIAMISBURG, OH FLGS AT LOCK ST	
IN SERVICE: - -	DAYTON DISTRICT	FILE No. R-
	CADD or DWG. No. 82112184.11	SHEET No. 11 of 24

REVISION INITIALS											

PROPERTY
PENNSYLVANIA R.R.

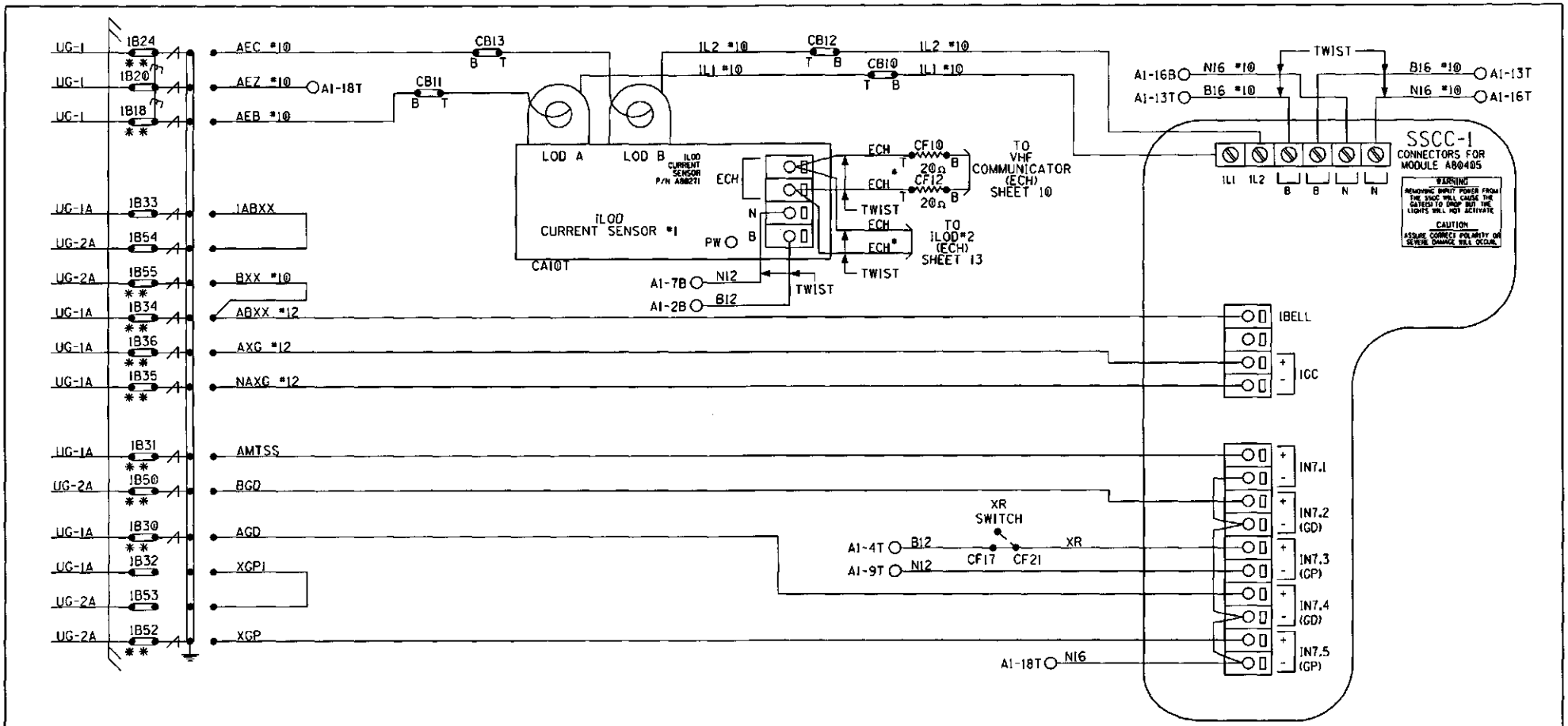

NOTES: ALL WIRING TO BE #16AWG UNLESS NOTED OTHERWISE.

* = ECHELON CONNECTIONS NOT TO EXCEED 53' IN LENGTH AND TOTAL LENGTH NOT TO EXCEED 430' WITH A MAXIMUM OF 8 NODES. RECOMMEND USE BELDEN WIRE CABLE #8461 OR EQUIVALENT.

** = TEST LINKS MUST BE OPENED TEMPORARILY FOR NEW COLD START OF NEW OR REPLACEMENT SSCC MODULE AND CAN ONLY BE CLOSED IN SEQUENCE WITH MFR. INSTRUCTIONS: SECTION 8 OF THE GCP 4000 REFERENCE MANUAL.

PANEL "A2" CONNECTORS FOR SSCC#1 MODULE (A80405)
ILOD#1 (A80271) HOOK-UP

DESIGNED BY: JLM 07-16-12	NORFOLK SOUTHERN		
DRAWN BY: XRL 07-16-12	OFFICE OF ASS'T. VICE PRESIDENT COMM. & SIGNAL, ATLANTA, GA.	M.P.: CJ-218.50	
CHECKED BY: PEH 07-26-12	MIAMISBURG, OH FLGS AT LOCK ST		
IN SERVICE: - -	DAYTON DISTRICT	FILE No. R-	
	CADD or DWG. No. 82112184.12	SHEET No. 12 of 24	

REVISION INITIALS											PROPERTY PENNSYLVANIA R.R.

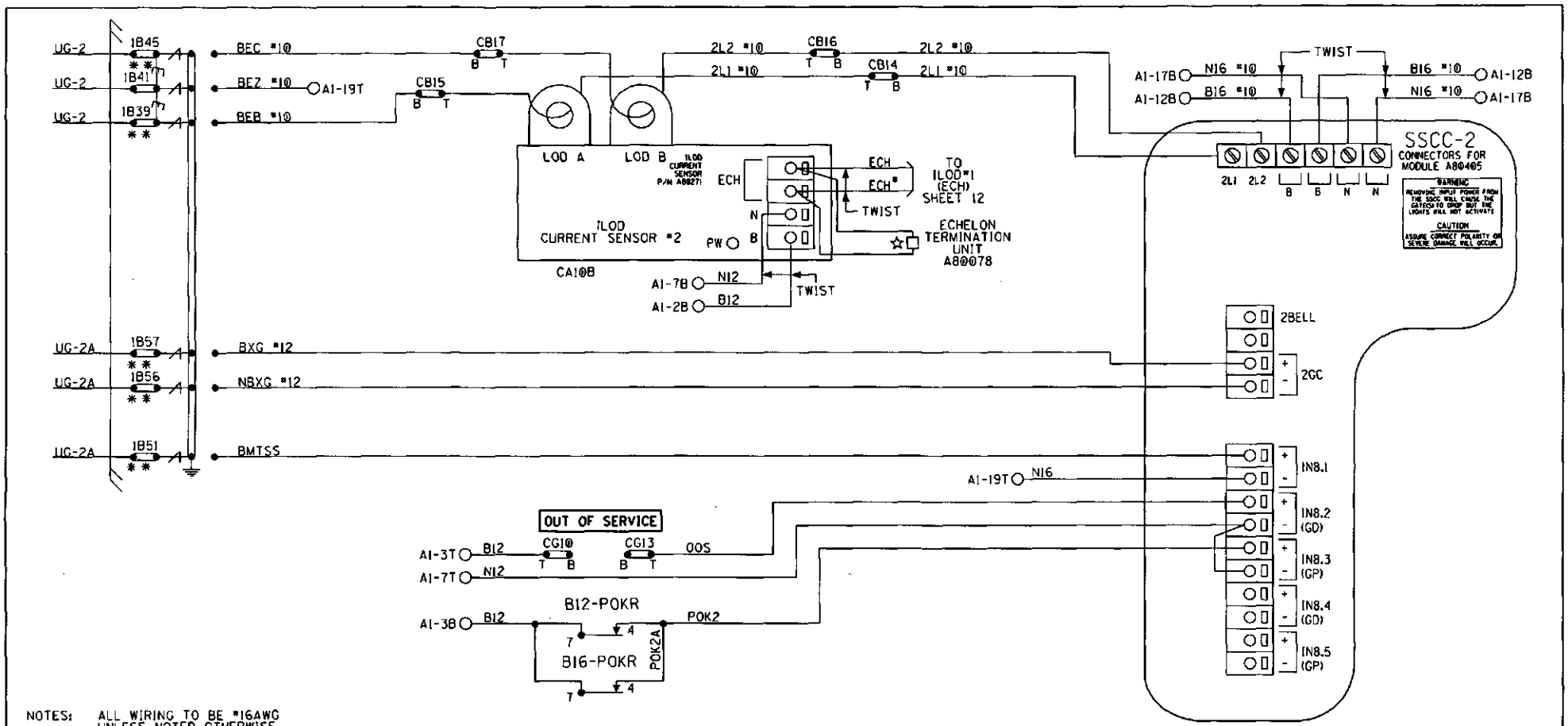

NOTES: ALL WIRING TO BE #16AWG UNLESS NOTED OTHERWISE.

* = ECHELON CONNECTIONS NOT TO EXCEED 53' IN LENGTH AND TOTAL LENGTH NOT TO EXCEED 430' WITH A MAXIMUM OF 8 NODES. RECOMMEND USE BELDEN WIRE CABLE #8461 OR EQUIVALENT.

** = TEST LINKS MUST BE OPENED TEMPORARILY FOR NEW COLD START OF NEW OR REPLACEMENT SSCC MODULE AND CAN ONLY BE CLOSED IN SEQUENCE WITH MFR. INSTRUCTIONS: SECTION 8 OF THE CCP 4000 REFERENCE MANUAL.

☆ = A80078 ECHELON TERMINATION UNIT TO TERMINATE ECHELON NETWORK.

PANEL 'A2' CONNECTORS FOR SSCC#2 MODULE (A80405) ILOD#2 (A80271) HOOK-UP

DESIGNED BY: JLM 07-16-12	NORFOLK SOUTHERN		
DRAWN BY: XRL 07-16-12	OFFICE OF ASS'T. VICE PRESIDENT COMM. & SIGNAL, ATLANTA, GA.	M.P.: CJ-218.50	
CHECKED BY: PEH 07-26-12	MIAMISBURG, OH FLGS AT LOCK ST		
IN SERVICE: - -	DAYTON DISTRICT	FILE No. R-	
	CADD or DWG. No. 82112184.13	SHEET No. 13 of 24	

REVISION INITIALS									

PROPERTY PENNSYLVANIA R.R.

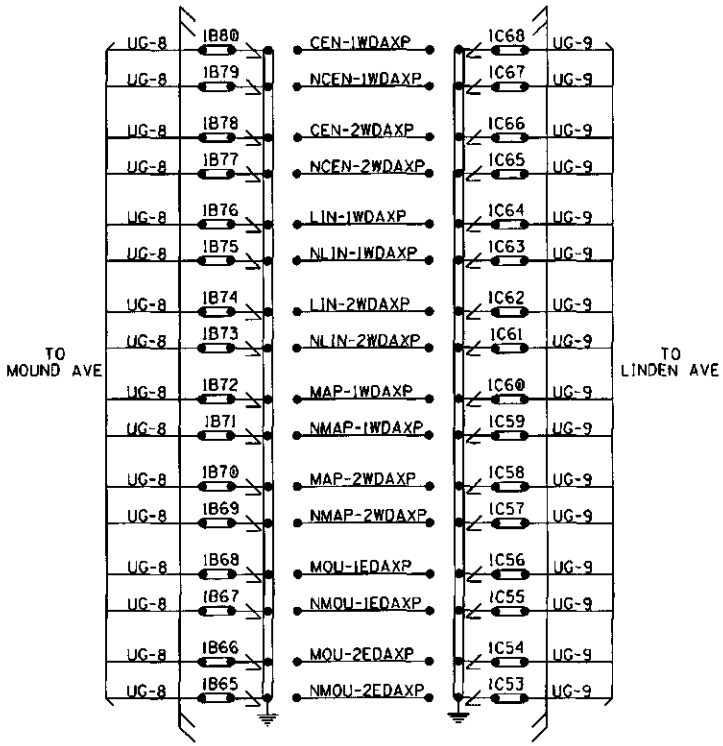

NOTE:
ALL WIRING TO BE #14AWG.

DAX CIRCUITS

DESIGNED BY: JLM 07-16-12	NORFOLK SOUTHERN	
DRAWN BY: XRL 07-16-12	OFFICE OF ASS'T. VICE PRESIDENT COMM. & SIGNAL, ATLANTA, GA.	M.P.: CJ-218.50
CHECKED BY: PEH 07-26-12	MIAMISBURG, OH FLGS AT LOCK ST	
IN SERVICE: - -	DAYTON DISTRICT	FILE No. R-
	CADD or DWG. No. 82112184.14	SHEET No. 14 of 24

REVISION INITIALS

PROPERTY
PENNSYLVANIA R.R.

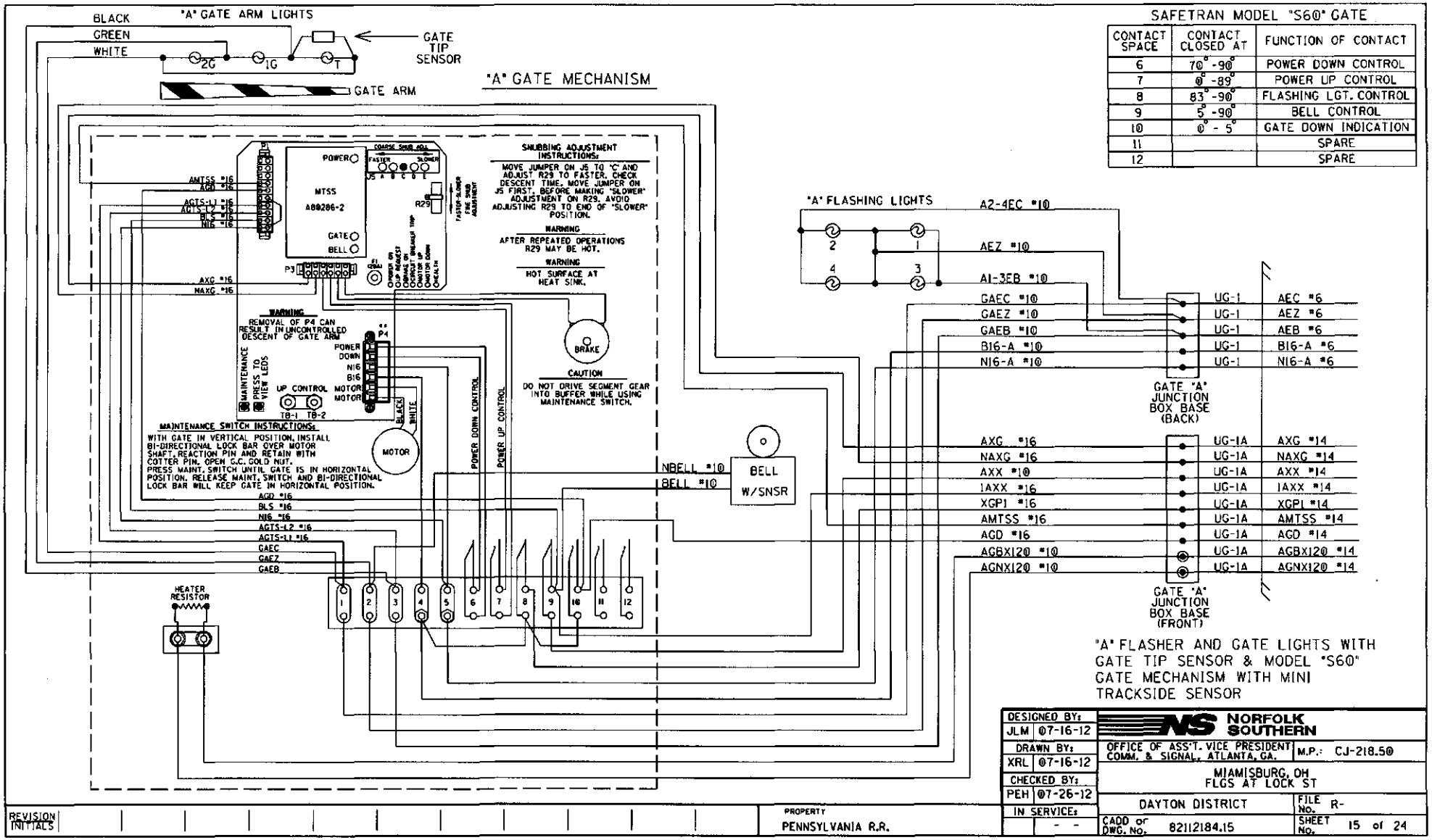

SAFETRAN MODEL "S60" GATE

CONTACT SPACE	CONTACT CLOSED AT	FUNCTION OF CONTACT
6	70°-90°	POWER DOWN CONTROL
7	0°-89°	POWER UP CONTROL
8	83°-90°	FLASHING LGT. CONTROL
9	5°-90°	BELL CONTROL
10	0°-5°	GATE DOWN INDICATION
11		SPARE
12		SPARE

"A" FLASHER AND GATE LIGHTS WITH GATE TIP SENSOR & MODEL "S60" GATE MECHANISM WITH MINI TRACKSIDE SENSOR

DESIGNED BY: JLM 07-16-12	NORFOLK SOUTHERN	
DRAWN BY: XRL 07-16-12	OFFICE OF ASS'T. VICE PRESIDENT COMM. & SIGNAL, ATLANTA, GA.	M.P.: CJ-218.50
CHECKED BY: PEH 07-26-12	MIAMISBURG, OH FLGS AT LOCK ST	
IN SERVICE: - -	DAYTON DISTRICT	FILE NO. R-
	CADD or DWG. NO. 82112184.15	SHEET NO. 15 of 24

REVISION INITIALS

PROPERTY PENNSYLVANIA R.R.