NC
FILE

43

Public Utilities Commission of Ohio

Memo

To: Docketing Division

From: George Martin, Grade Crossing Planner, Rail Division

Re: In the matter of the authorization of CSX Transportation to install an active grade crossing warning device in Shelby County

Date: October 2, 2012

The Ohio Rail Development Commission (ORDC) has authorized funding for CSX Transportation (CSX) to install mast mounted flashing lights and roadway gates at the Feree Rd/TR 144, DOT# 538739A, grade crossing in Perry Township, Shelby County. The crossing was surveyed on March 12, 2012 and was found to warrant the upgrade.

The project will be paid for with federal funds, and is actual cost. As the plan and estimate have already been submitted and approved, staff requests an Entry with completion of the projects in nine months. Construction may commence at once. Staff requests that the following language be incorporated in the Entry:

It is expected that all work necessary for FHWA acceptance of the warning devices will be completed by the in-service due date and that the railroad will be responsible for this work. This work includes, but is not limited to:

Any ancillary work to make the warning devices function as designed and visible to the roadway user, and

MUTCD compliance, including minor roadway work if necessary.

A suggested case coding and heading would be:

PUCO Case No. 12- 2657 -RR-FED In the matter of the authorization of CSX Transportation to install an active grade crossing warning device in Shelby County

This is to certify that the images appearing are an accurate and complete reproduction of a case file document delivered in the regular course of business.
Technician AM Date Processed OCT 02 2012

RECEIVED-DOCKETING DIV
2012 OCT -2 PM 2:59
PUCO

C: Legal Department

Please serve the following parties of record

Ms Susan Kirkland

Ohio Rail Development Commission

1980 West Broad St, 2nd Floor

Columbus, Oh 43223

Ms Amanda DeCesare

CSX Transportation

1717 Dixie Hwy, Ste 400

Ft Wright, Ky 41011

Perry Township Trustees

6370 Jackson Rd

Sidney, Oh 45365

Mr Robert Geuy

Shelby County Engineer

500 Gearhart Rd

Sidney, Oh 45365-9404

Pioneer Rural Electric Coop

OHIO RAIL DEVELOPMENT COMMISSION
INTER-OFFICE COMMUNICATION

TO: **Leah Thomas-Dalton, Rail Division Chief, PUCO**

FROM: **Susan Kirkland, Manager, Safety Section, ORDC**

BY: **Tim Perkins, Project Manager** Tim Perkins

SUBJECT: **Shelby County, TR 144, Ferree Road, CSX, DOT No. 538 739 A, PID No. 93324, OH0898**

DATE: **October 2, 2012**

The Public Utilities Commission of Ohio (PUCO) established a diagnostic survey at the subject location on March 12, 2012. The Ohio Rail Development Commission (ORDC) attended the review. The Diagnostic Team recommended the improvement of warning devices to flashing lights and roadway gates. Copies of the diagnostic review form and the plan and estimate are attached.

PE has already been provided by the railroad. ORDC approves the site plans and estimates as provided. Please issue a construction-only order for the project outlined above. This construction authorization is made with the stipulation and understanding that any field work needs prior approval before the work begins. This authorization is made with the stipulation and understanding that an approved estimate may contain entries for items or activities that may be cited and found to be ineligible for federal participation during the project audit.

It is expected that all work necessary for FHWA acceptance of the warning devices will be completed by the in-service due date and that the railroad will be responsible for this work. This work includes, but is not limited to:

- any ancillary work to make warning devices function as designed and visible to the roadway user, and
- MUTCD compliance – including minor roadway work if necessary.

Thank you for your assistance with these matters.

Attachment: Diagnostic Review
Plan & Estimate

OHIO RAIL DEVELOPMENT COMMISSION

Mail Stop #3140, 1980 West Broad Street, Columbus OH 43223
John R. Kasich, Governor • James G. Bradley, Chairman

October 2, 2012

Amanda DeCesare
CSX Transportation
Public Projects Manager
1717 Dixie Highway, Suite 400
Ft. Wright, KY 41011

RE: Shelby County, T.R. 144, Ferree Road, DOT No. 538 739 A, PID No. 93324, OP: OH0898

Dear Ms. DeCesare:

The CSX Transportation (CSX) plan and estimate dated August 27, 2012, in the amount of $247,786.00 for the referenced project has been reviewed and is acceptable with the changes noted below. CSX may proceed with the construction of the proposed grade crossing warning system in accordance with the abbreviated plan. This authorization is made with the stipulation and understanding that the approved estimate may contain entries for items or activities that may be cited and found to be ineligible for federal participation during the project audit. Reimbursement of eligible actual cost is limited to $247,786.00. Additional costs must be approved in writing by the ORDC prior to being incurred. Emergency verbal authorizations by ORDC may be permitted and will be confirmed by ORDC in writing within ten (10) business days of the verbal approval.

This authorization is contingent upon CSX accepting the following instructions:

1. CSX will furnish prior written notification of their scheduled date to start construction to George Martin, PUCO, Railroad Division.

2. CSX's project foreman will furnish FAX or written notification five (5) working days prior to the date work will start at the project site to Tim Perkins, Ohio Rail Development Commission (ORDC), 1980 West Broad Street, Columbus, Ohio 43223, email Tim.Perkins@dot.state.oh.us or FAX (614) 728-4520, (telephone number 614-644-0284), and to the Public Utilities Commission of Ohio at 180 East Broad Street, Columbus, Ohio 43215, email George.martin@puc.state.oh.us, (telephone number 614-752-9107). CSX's project foreman will also notify the same of any stops and re-starts of the work activity and of the date work was completed for the project.

3. CSX will arrange for utilities to be located at the project site by the Ohio Utilities Protection Service (OUPS) prior to any construction activities at the site. Utilities that are not participating members of the service must be contacted directly by CSX.

4. CSX's project foremen will notify Tim Perkins of any changes in the scope of work, cost overruns, material changes, etc. which are not included in the approved plan and estimate and secure approval of same before the work is performed.

5. CSX will furnish two (2) copies of each partial bill to ORDC. Please find the enclosed Encumbrance Estimate to reference when billing.

6. CSX will furnish two (2) copies of the final all-inclusive bill to ORDC stating the exact dates of starting and completing work, the initial and final dates of construction and location where the accounts may be audited.

Thank you for your assistance with these matters.

Sincerely,

Tim Perkins

Tim Perkins
Project Manager

Ohio Rail Development Commission
1980 W. Broad Street, 2nd Floor
Columbus, OH 43223

Diagnostic Review Team Survey

Date: 3/12/2012

Location Data

Street or Road Name:	Feree Road
Route/Road Number (i.e. Twp., Co., SR or US)	TR 144
US DOT No.:	538739A
County:	Shelby (SHE)
Township:	Perry Twp
City: (In or Near)	Sidney
Railroad Name:	CSX Transportation
Railroad Division:	Great Lakes
Branch/Line Name:	Indianapolis Line
Nearest RR Timetable Station:	Sidney
RR Milepost:	159.5

On-Site Review Team

(Include: Name – Organization – Phone Number – Email)

1. Tim Perkins – ORDC – 614.580.7749 – tim.perkins@dot.state.oh.us
2. John H. Greiner Perry Twp. 937-658-0382
3. George Martin PUCO 614-752-9107
4. Matthew K Barhorst Perry Twp 937-402-0113
5. [illegible] CSX cell 502-523-7013
6.
7.
8.
9.

Existing Traffic Control Devices

Type of Warning Devices	Installed?		Quantity/Comments
Advance Warning Signs (condition?)	☑ Yes	☐ No	2 good
'Stop' Signs	☐ Yes	☑ No	
'Stop Ahead' Signs	☐ Yes	☑ No	
Pavement Markings (condition?)	☑ Yes	☐ No	2 good
Crossbucks	☑ Yes	☐ No	2 fair
Number of Tracks Signs	☑ Yes	☐ No	2
Inventory Tags	☑ Yes	☐ No	2
Interconnected Highway Traffic Signal	☐ Yes	☑ No	
Mast-Mounted Flashing Lights	☐ Yes	☑ No	
Cantilever Flashing Lights	☐ Yes	☑ No	Number: Length:
Side Lights	☐ Yes	☑ No	
Automatic Gates	☐ Yes	☑ No	Number: Length:
Bells	☐ Yes	☑ No	Number:
Sidewalk Gate Arms	☐ Yes	☑ No	
'No Turn' Signs	☐ Yes	☑ No	
Illumination	☐ Yes	☑ No	
Is crossing flagged by train crew?	☐ Yes	☑ No	
Other	☐ Yes	☑ No	

Safety Data (Obtain crash reports, if possible, prior to review)

	Initial Information (from database)	Revised
Number & dates of crashes in previous 5 years	1 (9/30/2011)	
Hazard Ranking	146 Date Run: 2/24/2012	

Railroad Data

Railroad Characteristics	Initial Information (from database)	Revised
Total trains per day	33	33
< 1 per day		
Day thru trains	13	13
Night thru trains	17	17
Daytime switching movements	3	3
Nighttime switching movements	0	
Total number of tracks		
Number of main tracks	3	2 main
Number of other tracks	1	1 Spur
Maximum train speed	60	60
Typical train speed		55-60
Amtrak		NO

If non-gated crossing, is clearing sight distance adequate in all quadrants? (See Table 1) ☑ Yes ☐ No

If multiple tracks, can two trains occupy crossing at the same time? ☑ Yes ☐ No

Can one train block the motorists' view of another train at crossing? ☑ Yes (Explain below) ☐ No

Can one or more tracks be eliminated through the crossing? ☐ Yes ☑ No

Are there other track(s) crossing this same roadway within 100 ft of this crossing? ☐ Yes ☑ No

If yes, Crossing DOT #(if different) _____

If yes, distance _____ (take measurement between track centerlines at closest point along roadway)

Roadway Data

Local Highway Authority: Perry Twp

Roadway Characteristics	Initial Information (from database)	Revised
Average daily traffic	42 (2011)	42
Highway paved	☐ Yes ☒ No	☑ Yes ☐ No

Roadway Surface: ☑ Blacktop ☐ Gravel ☐ Concrete ☐ Other _____

Roadway width: 20 ft.

Number of highway lanes		2
Urban or Rural	Rural	Rural
Vehicle Speed: 55 MPH		

School Bus Operation: ☒ No ☐ Yes ____ Amount Fairlawn local

Hazardous Materials Trucks: ☐ No ☑ Yes 3 Amount

Shoulders: ☑ No ☐ Yes

Is the shoulder surfaced? ☑ No ☐ Yes

Is there existing guardrail along roadway in crossing vicinity? ☑ No ☐ Yes

Is stopping site distance adequate? (See Table 2) ☑ Yes ☐ No If no, deficient approach(es) _____

Quadrant _____ Curb and Gutter:	Quadrant _____ Curb and Gutter:
☐ Functional (Curb height = 4" or more)	☐ Functional (Curb height = 4" or more)
☐ Non-functional (Curb height = Less than 4")	☐ Non-functional (Curb height = Less than 4")
☑ None	☑ None

Pedestrians: ☑ No ☐ Yes

Is sidewalk present? ☑ No ☐ Yes

Is there a nearby intersection that could cause queuing over the crossing? ☑ No ☐ Yes

If yes,

Distance _____

Is this intersection signalized? ☑ No ☐ Yes

Are the signals currently interconnected with the existing crossing warning devices? ☑ No ☐ Yes

Is there a 'Do not Stop on Track' sign? ☑ No ☐ Yes

Is a roadway improvement project (e.g. widening, turn lanes, nearby new or upgraded traffic signal, sidewalk) planned at or near this location in the foreseeable future? ☑ No ☐ Yes

If yes,

Improvement type_____ Lead Agency _____ Timeline/completion _____

Is it the consensus of the Diagnostic Review Team that this is a potential closure project: ☑ No ☐ Yes

Explain reasons:

Type of Development

		Location of nearby schools:
☑ Open Space	☐ Institutional	
☐ Industrial	☐ Commercial	
☐ Residential		3 - Fairlawn

Utility Information

Is commercial power available? ☐ No ☑ Yes

Utility Provider (Company Name) _____ Phone Number _____

Nearest Available Power Source @ Crossing Pineer Rural Electric Co-Op

What other utilities are present? Fiber TVA Parelled
(add locations to sketch)

Is(are) there potential utility conflict(s) ☐ Yes ☐ No ☑ Unknown

Comments:

Potential Red Flags / Project Challenges

Traffic Signal Preemption (include traffic signal intersection name and LHA with jurisdiction over traffic signal, if known):

NO

Crossing Consolidation or Closure:

NO

Real Estate or ROW:

Township 60'

Culverts / Drainage / Ballast Conditions:

No

Roadway and/or Sidewalks:

No

Circuitry (e.g. reaches out to other crossings, specific needs, etc.):

Overlapping approach on Johnston Sles Rd &
Way side Signal / Switch @ crossing

Environmental:

No

Other:

Diagnostic Team Recommendations	
	Quadrants Needed
☑ Install/upgrade active devices	
☐ Automatic Flashing Lights (AFLS)	
☐ AFLS /Cants	
☑ AFLS / Gates	
☐ AFLS / Gates / Cants	
☑ Bells / number	2
☐ Upgrade circuitry / type	
☑ Sidelights	needed due Sharp curve In roadway
☐ Guardrail Needed	
☐ Install/Replace curb	
☐ Bungalow placement & offset from rail & highway	SE Quad 75/50 power drop there
☐ Other (define)	
Comments:	
☐ Install/upgrade traffic signal preemption	
☐ No improvements needed	
☐ Other (define)	

Acknowledgement of Recommendations (each entity represented at the diagnostic must have at least one signature acknowledgement):

Field Dimensions

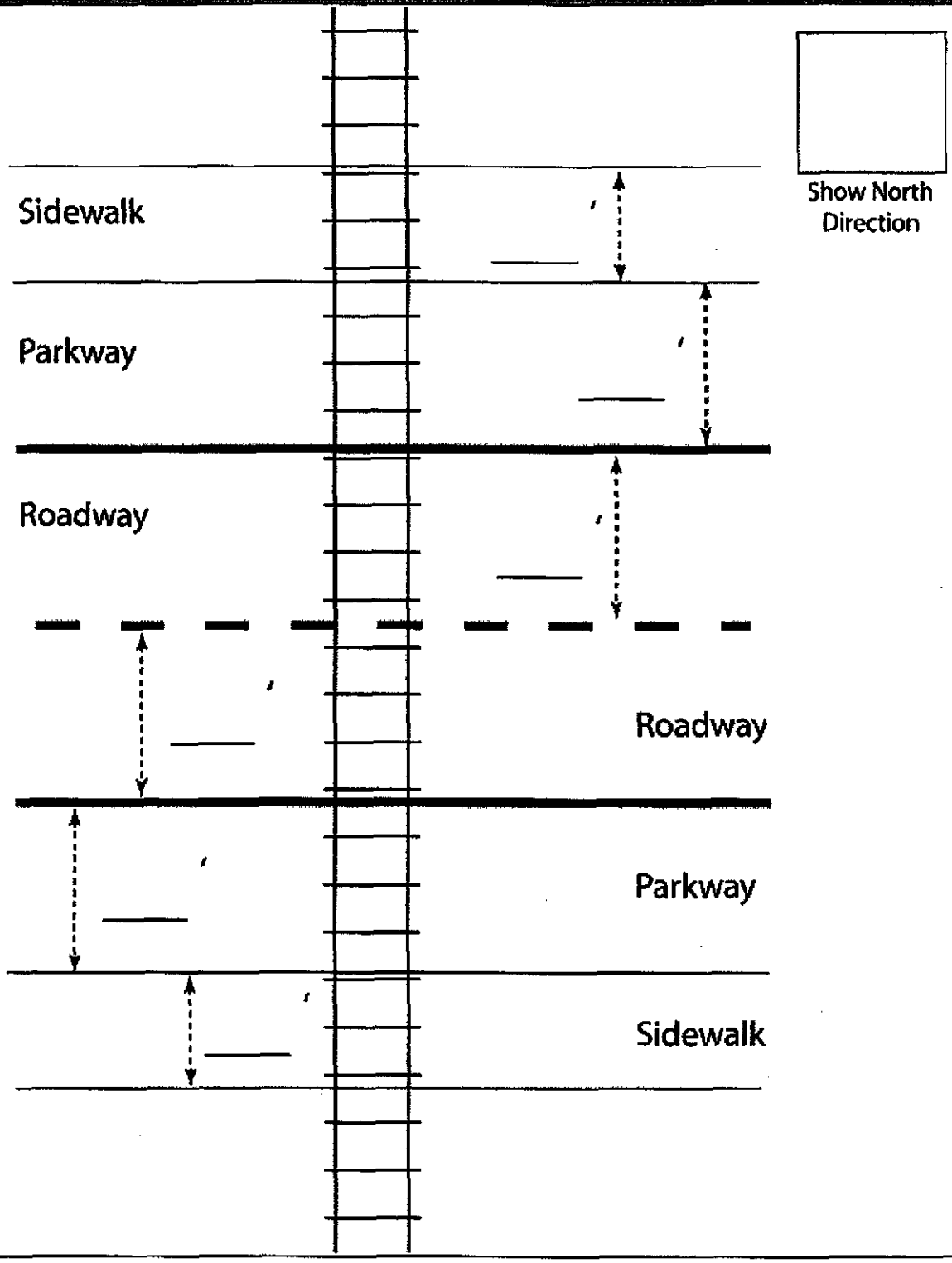

Crossing Angle ☐ 0-29° ☐ 30-59° ☐ 60-90° Measured in _____ Quadrant?

Measurements by: _____

Field Sketch

Include utilities as marked by OUPS and LHA; include ROW boundaries as indicated by railroad and LHA.

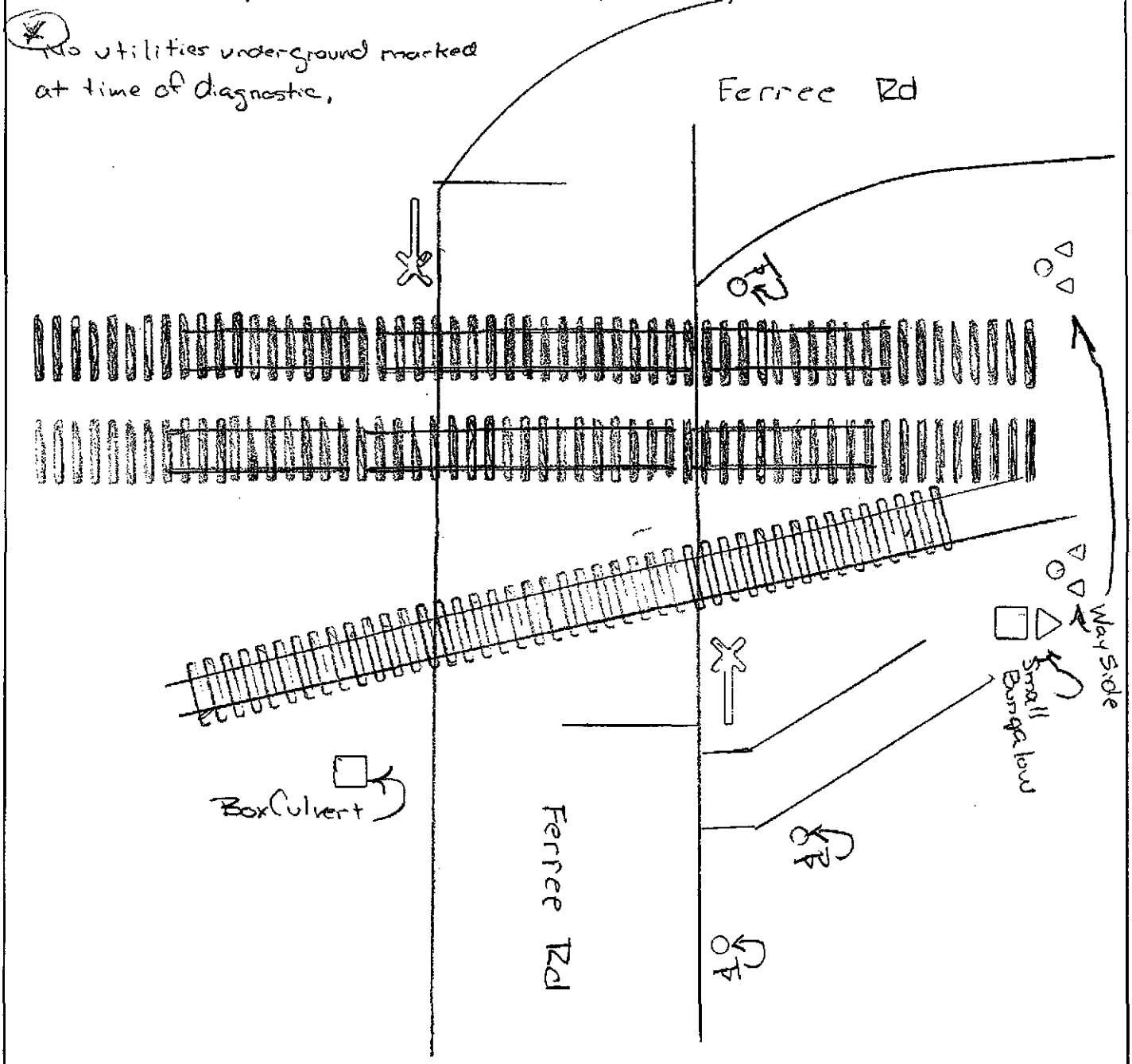

Crossing Angle ☐ 0-29° ☐ 30-59° ☑ 60-90° Measured in _____ Quadrant?

Sketch by: [signature]

UPDATED (10/2011)

TABLE I

Clearing Sight Distances

Maximum Authorized Train Speed	Distance (dT) Along Railroad from Crossing (ft)
1 - 10	240
15	360
20	480
25	600
30	720
35	840
40	960
45	1080
50	1200
55	1320
60	1440
65	1560
70	1680
75	1800
80	1920
85	2040
90	2160

Source: R-H Grade Crossing Handbook Table 36 (pp. 132-133)

Notes:

All calculated distances are rounded up to the next higher 5-foot increment.

Distances indicated are for 65-ft double bottom semi-tractor trailers and level single track 90 degree crossings; and may need to be adjusted for multiple tracks, skewed crossings or approaches on grades.

Clearing Sight Distance is to be measured in each vehicle travel direction at non-gated crossings as viewed from a point 25 feet from centerline of nearest track in the center of whichever travel lane is nearest the direction along track being measured.

Table 2

Stopping Sight Distances

Highway Vehicle Speed	Distance (dH) Along Roadway from Crossing (ft)
0	n/a
5	50
10	70
15	105
20	135
25	180
30	225
35	280
40	340
45	410
50	490
55	570
60	660
65	760
70	865

Source: R-H Grade Crossing Handbook Table 36 (pp. 132-133)

Notes:

All calculated distances are rounded up to the next higher 5-foot increment.

Distances indicated are for 65-ft double bottom semi-tractor trailers on dry level pavements.

Stopping Sight Distance is to be measured on each roadway approach to crossing from stop bar.

CSX TRANSPORTATION, INC.
FORCE ACCOUNT ESTIMATE

ACCT. CODE : 709 - OH0898

ESTIMATE SUBJECT TO REVISION AFTER: **2/20/2013** **DOT NO.:** 538739A
CITY: (near) Sidney **COUNTY:** Shelby **STATE:** OH
DESCRIPTION: Ferree Rd. - Install Flashing Light Signals and Gates with CWT.

DIVISION: Great Lakes **SUB-DIV:** Indianapolis Line **MILE POST:** QI - 159.50
AGENCY PROJECT NUMBER: __

PRELIMINARY ENGINEERING:				
200 Additive	31.34%		$	-
230 Expenses			$	-
212 Contracted & Administrative Engineering Services			$	2,000
Subtotal			$	2,000
CONSTRUCTION ENGINEERING/INSPECTION:				
200 Additive	31.34%		$	-
230 Expenses			$	-
212 Contracted & Administrative Engineering Services			$	2,000
Subtotal			$	2,000
FLAGGING SERVICE: (Contract Labor)				
070 Labor (Conductor-Flagman)			$	-
050 Labor (Foreman/Inspector)			$	-
070 Additive	73.76%	(Transportation Department)	$	-
050 Additive	97.95%	(Engineering Department)	$	-
230 *Per Diem*	*(Engineering Department)*		$	-
230 Expenses			$	-
Subtotal			$	-
SIGNAL & COMMUNICATIONS WORK:		(Details Attached)	$	238,732
TRACK WORK: (Details Attached)			$	-
ACCOUNTING & BILLING:				
040 Labor			$	3,100
040 Additive	63.03%		$	1,954
Subtotal			$	5,054
PROJECT SUBTOTAL			$	247,786
900 **CONTINGENCIES:**			$	-
GRAND TOTAL		**********	$	247,786

DIVISION OF COST:

Agency	100.00%		$	247,786
Railroad			$	-
TOTAL		**********	$	247,786

NOTE: Estimate is based on FULL CROSSING CLOSURE during work by Railroad Forces.
This estimate has been prepared based on site conditions, anticipated work duration periods, material prices, labor rates, manpower and resource availability, and other factors known as of the date prepared. The actual cost for CSXT work may differ based upon the agency's requirements, their contractor's work procedures, and/or other conditions that become apparent once construction commences or during the progress of the work

Office of Assistant Chief Engineer Public Projects--Jacksonville, Florida

Estimated prepared by: BSE **Approved by:** AJD **CSXT Public Project Group**
DATE: 8/24/2012 **REVISED:** **DATE:** 8/27/2012

Form Revised 05-05-2010-LLS

Estimate No. 120778

CSX Transportation

Ferree Rd. (TR 144) - Install FLS&G.
Sidney, OH

DOT: 538739A | OP: OH0898 | CSX Project: OH2012065

Summary

Material	$ 102,996
Sales Tax	$ 0
Labor:	
Construction Labor (129 man-days)	$ 35,021
Shop Labor (7 man-days)	$ 1,470
Subsistence (97 man-days)	$ 12,610
Railroad Engineering, Preliminary	$ 5,031
Railroad Engineering, Construction	$ 5,253
Additives to Construction Labor	$ 30,878
Additives to Shop Labor	$ 927
Additives to Track Labor	$ 0
Additives to Engineering	$ 3,223
Equipment Expenses (21 work days)	$ 13,650
Waste Management (21 work days)	$ 504
Contract Engineering	$ 12,289
Freight	$ 7,380
Poleline Removal	$ 0
AC Power Service	$ 2,500
Salvage	$ 0
Vacuum Truck Rental	$ 5,000
TOTAL ESTIMATE COST	$ 238,733

Date: 08/17/2012
Estimated By: Joseph Wiltsie, Jr.

NOTE: This estimate should be considered void one year from date of estimate.

Shop Material List for CSX Project: OH2012065 (Effective: 08/17/2012)
Install Fls/gates and CWT
Sidney, OH - QI 159.50

Catalog Num	Cond	Unit Price	Qty	Cost	Description
020-0003386	1	6781.00	1	6781.00	HOUSE 6X6L ALUM INCLUDES 5 SHELFS, FARADAY CLOSET, 240V
020-0007673	1	21.28	1	21.28	RESISTOR ADJUSTABLE 1.530 TO 16.00 OHMS 15W US&S N161444
020-0016116	1	337.12	1	337.12	DRIVER MODEL TD-1A TRACK ELECTRO PNEUMATIC
020-0016117	1	203.84	1	203.84	GENERATOR MODEL ACG-2T AC ELECTRO PNEUMATIC
020-0017120	1	11.52	6	69.12	BLOCK TERMINAL 12 POST SINGLE STRIP AAR 14.1.6 WITH 1 AAR
020-0017125	1	3.54	27	95.58	BLOCK TERMINAL 2 POST AAR 14.1.8 WITH 1 AAR 14.1.11
020-0017211	1	627.20	1	627.20	TRANSFORMER LIGHT 750VA 010520-50X MODEL SLT-50
020-0021965	1	8.96	1	8.96	EXTRACTOR DWG 59688-4 TERMINAL GRS CAT P3-308 REF
020-0022651	1	55.89	9	503.01	PLUGBOARD KIT TYPE B1 OR ST1 RELAY ASSEMBLY WITH 12 EACH
020-0022701	1	68.00	27	1836.00	ARRESTER LPC 15012-1 0-30V DC OR 0-24V AC RATED AT 15 AMP
020-0025595	1	20.72	1	20.72	WRENCH DWG 55393-3 GR1 "E" TERMINAL POST NUT GRS CAT
020-0053360	1	406.56	3	1219.68	CHARGER BATTERY ELC 12/20 S 20 AMP 10-19.9 VDC ROTARY SW
020-0053510	1	233.11	1	233.11	KIT 240V AC EMERGENCY GENERATOR CABLE AND
020-0056920	1	45.83	1	45.83	RESISTOR ADJUSTABLE 0.770 TO 8.00 OHMS SAFETRAN 029603-4X
020-0660077	1	597.41	1	597.41	ARRESTER GE 9L10KAC213 FOR 240 VOLT SINGLE PHASE 3 WIRE
020-0750090	1	0.09	3	0.27	NUT INSULATED USE ON AAR BINDING POST TERMINAL FOR
020-0770060	1	13.44	22	295.68	ARRESTER US&S N451552-0201 TRACK SERIES RED LABEL USGA
020-0770105	1	22.40	9	201.60	ARRESTER HARMON 202217-000 AGE-1 TRACK AIR GAP EQUALIZER
020-1940055	1	14.22	1	14.22	CONTAINER CIRCUIT PRINT 24" SCHEDULE 20 4" PVC PIPE WITH
020-2501400	1	987.92	1	987.92	CONTROLLER DTMF RADIO KEY DOWN MODE 6 SET TIMER TO 60
020-2550060	1	7872.58	2	15745.16	PREDICTOR SAFETRAN GCP-3000D2 REDUNDANT ONE TRK SYS W/CASE,
020-3430110	1	321.84	5	1609.20	RELAY SAFETRAN 400004 500 OHMS CONTACTS 4FB-2F-1B CSX
020-3430115	1	421.20	1	421.20	RELAY SAFETRAN 400005 500 OHMS CONTACTS 4FB HEAVY DUTY
020-3430135	1	362.64	1	362.64	RELAY SAFETRAN 400213 460 OHMS CONTACTS 2FB CSX
020-3430170	1	318.53	1	318.53	RELAY SAFETRAN 400800-CSX 100/100 OHMS CONTACTS 6FB

Shop Material List for CSX Project: OH2012065 (Effective: 08/17/2012)
Install Fls/gates and CWT
Sidney, OH - QI 159.50

Catalog Num	Cond	Unit Price	Qty	Cost	Description
020-3430185	1	313.63	1	313.63	RELAY SAFETRAN 400700-X 60 OHMS CONTACTS 4FB CSX
020-4200100	1	6.04	2	12.08	CONNECTOR BUS 1" CENTERS 1/2" X 36" 18 GAGE PUNCHED 1/4" X
020-4200340	1	1.65	22	36.30	LINK TEST ASSEMBLY 1" CENTERS COMPLETE WITH INSULATED
020-4200350	1	2.04	9	18.36	LINK TEST ASSEMBLY 2-3/8" CENTERS COMPLETE WITH
020-4201045	1	0.09	300	27.00	NUT HEX CLAMP (FLAT NUT) AAR 14.1.11-7 14-24 NS-2 THD FLAT
020-8000067	1	14.61	2	29.22	LOCK AMERICAN H10SIGRA CSX SIGNAL PADLOCK WITH BLACK
020-8100044	1	3906.57	1	3906.57	RECORDER EVENT HAWK INCLUDES ETHERNET MODEM AND CURRENT
020-9470435	1	925.37	8	7402.96	MODULE SAFETRAN GCP-3000 TRANSCEIVER MODULE SAFETRAN
022-8005160	1	601.42	1	601.42	KIT CDMA AND VHF RADIO MATERIAL FOR USE WITH CSX

Total Cost: $ 44,903.82

Estimate ID: 120778

Field Material List for CSX Project: OH2012065 (Effective: 08/17/2012)
Install Fls/gates and CWT
Sidney, OH - QI 159.50

Catalog Num	Cond	Unit Price	Qty	Cost	Description
020-0010449	1	15.78	3	47.34	BOX, 9 INCH DIA. "FLOWER POT" ENCLOSURE WITH HD
020-0013555	1	297.00	2	594.00	BOX JUNCTION 8 WAY ALUMINUM INCLUDES 2 EACH 4 POST
020-0013908	1	6.98	450	3141.00	CABLE UG COMPOSITE 19 CONDUCTOR INCLUDES 13
020-0016115	1	120.96	1	120.96	RECTIFIER TRACK CIRCUIT EPC 800-004080-000 MODEL RING-10
020-0017070	1	5.32	1	5.32	PANDUIT 2" X 2" X 6' SLOTTED ORDER COVER 020.0017085.1
020-0017085	1	0.77	1	0.77	PANDUIT COVER 2" X 6' PANDUIT C2LG6
020-0017120	1	11.52	2	23.04	BLOCK TERMINAL 12 POST SINGLE STRIP AAR 14.1.6 WITH 1 AAR
020-0017605	1	0.31	300	93.00	WIRE CASE 10 AWG FLEX CSX SPEC SS796 OKONITE P/N
020-0022701	1	68.01	2	136.02	ARRESTER HYBRID LOW VOLTAGE 0-30V DC OR 0-24V AC RATED AT
020-0025143	1	47.04	1	47.04	PLATE SHUNT HOLDER CSX SK SS91-02 STEEL PLATE 20 IN SQ
020-0025145	1	320.49	8	2563.92	SHUNT ENCLOSURE INTERRAIL P/N IRS-SE8A WAYSIDE MOUNT
020-0052475	1	11.20	4	44.80	ARM EXTENSION 10-1/2" ALUM WITH 3/8" DIAMETER MOUNTING
020-0053066	1	3.94	36	141.84	BOND WEB OF RAIL TRACK CONNECTOR 3/16" DIA X 1" TAB
020-0053220	1	2.52	500	1260.00	CABLE POWER UG 3 COND NO 6 AWG, SHOW LENGTH ON EACH
020-0054075	1	1006.88	2	2013.76	GATE GARD NORMAL MOVEMENT COMPLETE WITH SHEAR PIN AND
020-0055421	1	18.61	6	111.66	BRACKET SIGN 4" OR 5" MAST W/1/2" U-BOLT FOR ALL SIGNS
020-0056191	1	46.37	2	92.74	SIGN MULTIPLE TRACK "3 TRACKS" COMPLETE WITH 2 EACH
020-0056421	1	18.61	4	74.44	BRACKET SIGN 4" OR 5" MAST FOR ALL SIGNS REQUIRING 5/8"
020-0056628	1	6750.24	1	6750.24	SIGNAL 02216-L GCWD GATE ASSY DWG SS222 INCLS 18 FBRGL ARM
020-0056674	1	5870.84	1	5870.84	SIGNAL 0220-L GCWD GATE ASSY DWG SS222 INCLS 18 FBRGL ARM
020-0057275	1	1.17	4000	4680.00	WIRE UG TRACK TWISTED PAIR NO. 6 AWG SOLID CONDUCTOR
020-1040322	1	162.40	29	4709.60	BATTERY SAFT SPL165, 165 AH POCKET PLATE NICKEL CADMIUM
020-1040540	1	31.36	2	62.72	TRAY BATTERY FIBER CO 82687-1-P 12" WIDTH 24" LONG
020-1040550	1	45.92	2	91.84	TRAY BATTERY FIBER CO 82687-3-P 12" WIDTH 38"
020-1150750	1	0.83	1000	830.00	BOND STRAND 3/16" DIA 7 STRANDS OF 19 STR EACH 6 WITH

Field Material List for CSX Project: OH2012065 (Effective: 08/17/2012)
Install Fls/gates and CWT
Sidney, OH - QI 159.50

Catalog Num	Cond	Unit Price	Qty	Cost	Description
020-1153550	1	4.31	32	137.92	CLIP TRACK WIRE RETAINER UNIVERSAL RAIL BASE WRAP
020-1360014	1	1000.44	1	1000.44	PACKAGE FOREMANS CARE FOR ALUMINUM TYPICAL BOM FOR USE
020-1360016	1	21.18	1	21.18	PACKAGE SAFETY & SECURMENT WITH 1 EA CAUTION TAG 1 EA
020-2500443	1	63.44	4	253.76	INDUCTOR 8V617-3000 DUMMY LOAD SAFETRAN
020-2500590	1	451.58	2	903.16	SHUNT SAFETRAN P/N 6000-62775-8621 NARROW BAND
020-2500591	1	399.37	2	798.74	SHUNT SAFETRAN 62775-1543 MULTI-FREQUENCY NARROW BAND
020-2500605	1	374.82	2	749.64	SHUNT SAFETRAN 62775-86 NARROW BAND 86HZ
020-2500615	1	301.96	2	603.92	SHUNT SAFETRAN 62775-156 NARROW BAND 156HZ
020-2530280	1	312.12	2	624.24	FILTER EPC 800-080055-107 TF-86
020-2530287	1	247.52	2	495.04	FILTER EPC 800-080055-103 TF-156
020-3262300	1	0.90	4	3.60	SCREW LAG 3/8 X 3" PILOT POINT GALVANIZED CHANCE
020-3262360	1	1.21	2	2.42	SCREW LAG 1/2" X 4-1/2" FETTER DRIVE LAG HOT DIP GALV
020-3263656	1	1.77	10	17.70	SLEEVE BONDSTRAND 3/16" TO 3/16" 100 PER BOX, NICOPRESS
020-3263680	1	0.35	150	52.50	STAPLE COPPERWELD ROLLED POINT 1-3/4" LONG, 3/8"
020-3901895	1	92.68	2	185.36	TIP FLEX HWY CROSSING GATE 24 IN LONG RED & WHITE STRIPES
020-3920200	1	181.17	2	362.34	BELL GCWD ELECTRONIC 4" OR 5" MAST 8 TO 13 VOLTS DC GSI PN
020-3930010	1	3.70	2	7.40	KIT GATE ARM WARNING STICKER KIT INCLUDES 1-EA 5"X3"
020-4200340	1	1.65	35	57.75	LINK TEST ASSEMBLY 1" CENTERS COMPLETE WITH INSULATED
020-4200900	1	0.29	8	2.32	CONNECTOR SHEATHING AMP 329860 FOR NO. 14 WIRE
020-4201042	1	0.12	68	8.16	NUT HEX BINDING (RSA NUT) AAR 14.1.11-6 14-24 NS-2 THD CONE
020-4201043	1	0.11	408	44.88	NUT HEX CLAMP (FLAT NUT) AAR 14.1.11-7 14-24 NS-2 THD FLAT
020-4201044	1	0.11	340	37.40	WASHER AAR 14.1.11 ROUND COPPER NICKEL PLATED FOR AAR
020-7300031	1	200.48	2	400.96	BRACKET BELL FITS WESTERN CULLEN HAYES JUNCTION BOX
020-9999991	1	100.00	1	100.00	BLOCKING AND BRACING FOR PROJECTS BURCO DIST
151-1150204	1	5.38	5	26.90	PIPE STEEL ASTM A53-68 2" X 5 FT STD WEIGHT SCHEDULE 40

Field Material List for CSX Project: OH2012065 (Effective: 08/17/2012)
Install Fls/gates and CWT
Sidney, OH - QI 159.50

Catalog Num	Cond	Unit Price	Qty	Cost	Description
250-0001827	1	13.76	1	13.76	BREAKER CIRCUIT SQ D QO235
250-0006180	1	1.23	1	1.23	BUSHING CONDUIT 2" PLASTIC LAMINATED THRD INSUL END
250-1680406	1	0.49	340	166.60	CONDUIT LIQUID TIGHT 3/4" FLEXIBLE GREY PVC CARLON P/N
250-1680408	1	1.00	340	340.00	CONDUIT LIQUID TIGHT 3/4" NON-METALLIC ORANGE PVC
250-1807125	1	0.33	2	0.66	LOCKNUT CONDUIT 2" APPLETON BL200 STEEL CITY LN106 T&B
250-1813215	1	0.40	2	0.80	STRAP CONDUIT GALV 2" 2 HOLE DIA EX BLT T-40 STEEL CITY
360-0006100	1	35.07	1	35.07	STOOL STEP WOOD 14"X 20" SIGNAL MAINTAINERS CSXT
360-0800145	1	4.72	1	4.72	BROOM WAREHOUSE CORN HVY DUTY 1-1/8" DIA HANDLE

Total Cost: $ 40,967.46

Estimate ID: 120778

Consumables List for CSX Project: OH2012065 (Effective: 08/17/2012)
Install Fls/gates and CWT
Sidney, OH - QI 159.50

Catalog Num	Cond	Unit Price	Qty	Cost	Description
N/A		50.00	140	7000.00	FILL MATERIAL, 1 CUBIC YARD
N/A		800.00	1	800.00	WALKWAY ROCK, 10 CUBIC YARDS
013-5000505	1	1118.88	4	4475.52	JOINT INSULATED PREMIUM 132RE 20'-0" LONG WITH 13'-4" X
020-0017605	1	0.29	350	101.50	WIRE CASE 10 AWG FLEX CSX SPEC SS796 OKONITE
020-0017607	1	0.68	500	340.00	WIRE CASE TW PR NO 10 AWG FLEX CSX SPEC SS796 TWIST 2
020-0017625	1	0.43	150	64.50	WIRE CASE TW PR NO 14 AWG FLEX CSX SPEC SS796 TWIST 2
020-0017630	1	0.13	200	26.00	WIRE CASE NO 16 AWG FLEX CSX SPEC SS796 FURN 1000 FT SPOOL
020-0017635	1	0.80	130	104.00	WIRE SIGNAL DEL 018 NO 6 COPPER STRANDED SINGLE
020-0028610	1	0.22	100	22.00	TERMINAL RING AMP 35628 YELLOW PLASTI-BOND HVY DUTY
020-1710055	1	1.99	250	497.50	CONDUIT SDR 13.5 4" ORANGE POLYETHYLENE TRENCHLESS
020-2060072	1	750.00	2	1500.00	FOUNDATION HELICAL SCREW-IN ASSEMBLY 7' X 10" COMPLETE
020-2060074	1	630.00	2	1260.00	EXTENSION 10" X 3' USE WITH XING GATE AND SIGNAL MAST
020-3261960	1	18.82	2	37.64	DECAL (DO NOT ORDER, CALL SIGNAL SHOP) ASSY 5" BLACK
020-3261970	1	9.41	2	18.82	DECAL ASSY 2" BLACK PRESSURE SENSITIVE VINYL PRE-MASKED
020-4200880	1	0.53	2	1.06	CONNECTOR TERMINAL 2-3/8" CENTERS AAR 14.1.15-4 NICKEL
020-4200892	1	0.44	27	11.88	CONNECTOR TERMINAL 1" CENTERS AAR 14.1.15-3 NICKEL PLATED
020-4251190	1	0.13	120	15.60	TERMINAL RING AMP 35627 BLACK PLASTI-BOND WIRE SIZE 10-12
020-4251290	1	0.49	30	14.70	TERMINAL WIRE AMP 322051 BLUE WIRE SIZE NO 6 AWG 1/4" STUD
020-4251295	1	0.49	6	2.94	TERMINAL WIRE AMP 322007 BLUE WIRE SIZE NO 6 AWG 3/8" STUD
020-9999992	1	50.00	1	50.00	HOUSE, SIGNAL HANDLING CHARGE, BURCO DISTRIBUTION
022-5290559	1	325.00	1	325.00	CONVERTER WILMORE INPUT 10V DC TO 16V DC OUTPUT 13.6V DC
280-8020160	1	56.79	8	454.32	WELD FIELD COMPLETE 132RE RAILTECH BOUTET P/N
450-0019212	1	0.02	100	2.00	SCREW 10 X 1" SHT METAL PAN HD TYPE A COARSE THREAD

Total Cost: $ 17,124.98

Estimate ID: 120778

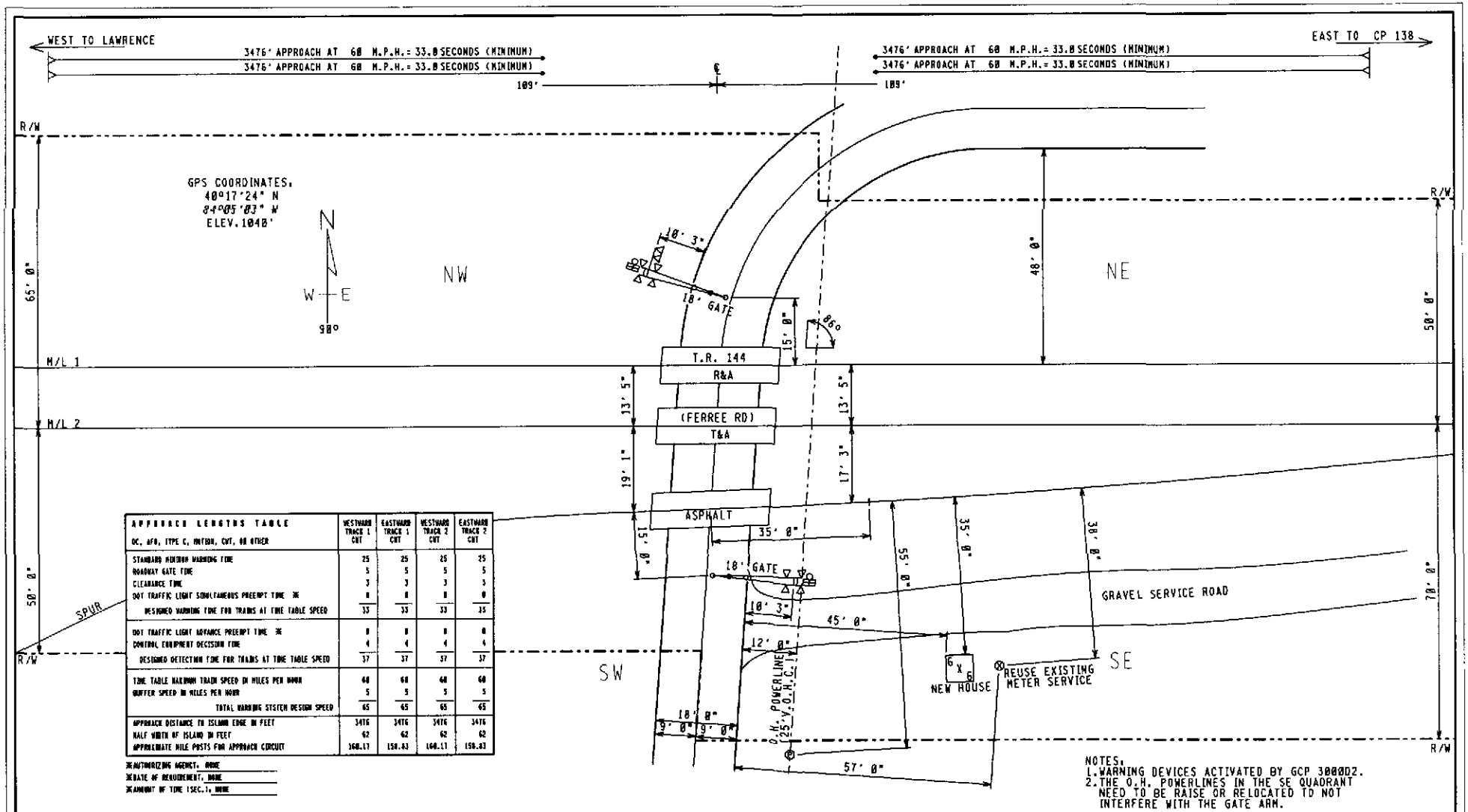

APPROACH LENGTHS TABLE DC, AFO, TYPE C, MATRIX, CWT, OR OTHER	WESTBOUND TRACK 1 CWT	EASTBOUND TRACK 1 CWT	WESTBOUND TRACK 2 CWT	EASTBOUND TRACK 2 CWT
STANDARD MINIMUM WARNING TIME	25	25	25	25
ROADWAY GATE TIME	5	5	5	5
CLEARANCE TIME	3	3	3	3
DOT TRAFFIC LIGHT SIMULTANEOUS PREEMPT TIME *	0	0	0	0
DESIGNED WARNING TIME FOR TRAINS AT TIME TABLE SPEED	33	33	33	33
DOT TRAFFIC LIGHT ADVANCE PREEMPT TIME *	0	0	0	0
CONTROL EQUIPMENT DECISION TIME	4	4	4	4
DESIGNED DETECTION TIME FOR TRAINS AT TIME TABLE SPEED	37	37	37	37
TIME TABLE MAXIMUM TRACK SPEED IN MILES PER HOUR	60	60	60	60
BUFFER SPEED IN MILES PER HOUR	5	5	5	5
TOTAL WARNING SYSTEM DESIGN SPEED	65	65	65	65
APPROACH DISTANCE TO ISLAND EDGE IN FEET	3476	3476	3476	3476
HALF WIDTH OF ISLAND IN FEET	62	62	62	62
APPROXIMATE MILE POSTS FOR APPROACH CIRCUIT	160.17	150.83	160.17	150.83

*AUTHORIZING AGENCY: NONE
*DATE OF REQUIREMENT: NONE
*AMOUNT OF TIME (SEC.): NONE

NOTES:
1. WARNING DEVICES ACTIVATED BY GCP 300002.
2. THE O.H. POWERLINES IN THE SE QUADRANT NEED TO BE RAISE OR RELOCATED TO NOT INTERFERE WITH THE GATE ARM.

FILE NAME: Q115950.H0L	REVISION DATES	PRODUCED FOR:	PRODUCED BY:	LEGEND	GUARD RAIL	METER SERVICE	STREET NAME: T.R. 144 (FERREE RD.)
DATE DRAWN: 07/05/2012	08-20-12 GRN	CSX TRANSPORTATION	invensys Rail	CSX ROW	O.H. POWER	POLE	CITY & STATE: SIDNEY, OH
DRAWN BY: NOVINSKI, GREG		RAIL TRANSPORT GROUP ENGINEERING	7775 BAYMEADOWS WAY	R/R POLELINE	FENCE	FIRE PLUG	PROJECT #: OH2012065
CHECKED BY: PROSPERO, ERNESTO		COMMUNICATIONS AND SIGNALS	SUITE 250	GAS	WATER	SEWER CAP	OP #: OH0898
SSC #: JXX003035			JACKSONVILLE, FL 32256	FIBER OPTIC	SEWER	GAS VENT	DOT #: 538739A

PROPOSED CROSSING LAYOUT
1"=20'

INDEX

CONTENTS

SH. NO.		REVISION NO. 1	2	3	4	5	6	7	8	9
I01	INDEX AND REVISIONS	⧄								
S01	TRACK AND SIGNAL PLAN	⧄								
E01	POWER DISTRIBUTION	⧄								
C01	CROSSING DETECTION CIRCUITRY	⧄								
C02	DETECTION DEVICE PROGRAM	⧄								
C03	CROSSING DETECTION CIRCUITRY	⧄								
C04	DETECTION DEVICE PROGRAM	⧄								
C05	CROSSING DETECTION CIRCUITRY	⧄								
C06	CROSSING WARNING DEVICE GATE CIRCUITRY	⧄								
C07	CROSSING WARNING DEVICE LIGHT CIRCUITRY	⧄								
C08	RECORDER CIRCUITS	⧄								
C09	RECORDER PROGRAM	⧄								

⧄ = DESIGN COMPLETED

⧅ = REVISION COMPLETED

NEW WORK

Invensys Rail

PROJ #. OH2012065
DES BY. J. BRADY
CHK BY. D. ALBRIGHT
DATE. 07-30-12

⬭ = NOTE

300BN02.I01
REV. 05-06-05

DESIGN DATE	REV. NO.
07-30-12	1

REVISIONS

REV. NO.	PROJECT NO.	DESIGN DATE	IN SERVICE DATE	REVISION DATE
1	OH2012065	07-30-12		

TO BE COMPLETED ON A.I.S.

CSX TRANSPORTATION

RAIL TRANSPORT GROUP ENGINEERING
COMMUNICATIONS AND SIGNALS

T.R. 144 (FERREE RD.) 538739A

INDEX AND REVISIONS
SIDNEY, OH M.P. QI-159.50

DESIGNED	DIGITIZED	CHECKED	DATE
IRC/JWB	IRC/JWB	IRC/DBA	07-30-12

DRAWING	SHEET NO	FILE	SHEET
-----	-----	QI15950	I01

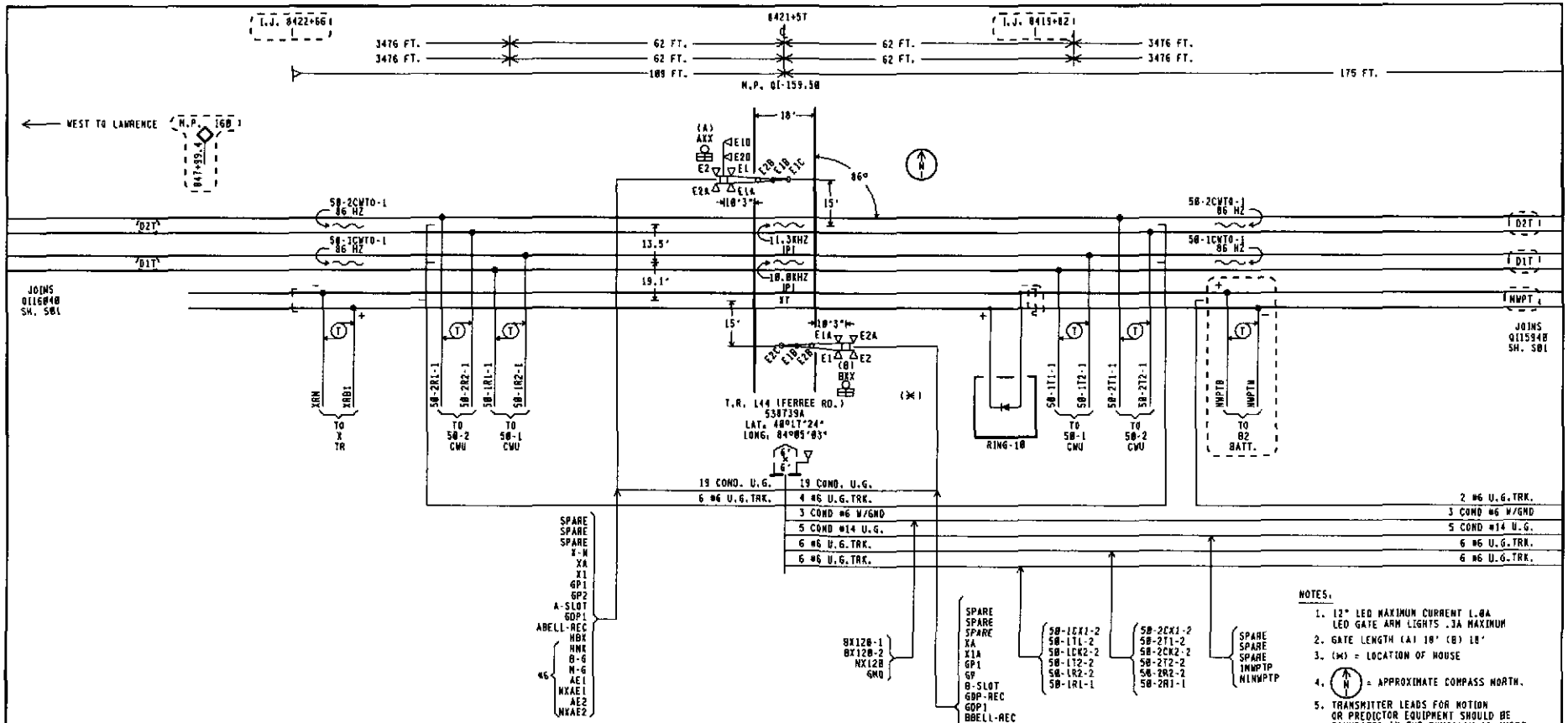

APPROACH LENGTHS TABLE DC, AFO, TYPE C, MOTION, CWT, OR OTHER	WESTWARD TRACK 1 CWT	EASTWARD TRACK 1 CWT	WESTWARD TRACK 2 CWT	EASTWARD TRACK 2 CWT
STANDARD MINIMUM WARNING TIME IN SECONDS	25	25	25	25
ROADWAY GATE TIME IN SECONDS	5	5	5	5
CLEARANCE TIME IN SECONDS	3	3	3	3
DOT TRAFFIC LIGHT SIMULTANEOUS PREEMPT TIME IN SECONDS*	0	0	0	0
DESIGNED WARNING TIME FOR TRAINS AT TIME TABLE SPEED	33 SEC.	33 SEC.	33 SEC.	33 SEC.
DOT TRAFFIC LIGHT ADVANCE PREEMPT TIME IN SECONDS *	0	0	0	0
CONTROL EQUIPMENT DECISION TIME IN SECONDS	4	4	4	4
DESIGNED DETECTION TIME FOR TRAINS AT TIME TABLE SPEED	37 SEC.	37 SEC.	37 SEC.	37 SEC.
TIME TABLE MAXIMUM TRAIN SPEED IN MILES PER HOUR	60	60	60	60
BUFFER SPEED IN MILES PER HOUR	5	5	5	5
TOTAL WARNING SYSTEM DESIGN SPEED IN MILES PER HOUR	65	65	65	65
APPROACH DISTANCE TO ISLAND EDGE IN FEET	3476	3476	3476	3476
HALF WIDTH OF ISLAND IN FEET	62	62	62	62
APPROXIMATE MILE POSTS FOR APPROACH CIRCUIT	160.17	158.83	160.17	158.83

*AUTHORIZING AGENCY, NONE
*DATE OF REQUIREMENT, NONE
*AMOUNT OF TIME (SEC.), NONE

NOTES:

1. 12" LED MAXIMUM CURRENT 1.0A
   LED GATE ARM LIGHTS .3A MAXIMUM
2. GATE LENGTH (A) 18' (B) 18'
3. (*) = LOCATION OF HOUSE
4. (N) = APPROXIMATE COMPASS NORTH.
5. TRANSMITTER LEADS FOR MOTION OR PREDICTOR EQUIPMENT SHOULD BE CONNECTED ON THE BUNGALOW OR SHORT LEAD SIDE OF THE CROSSING.
6. ISLAND TRACK LEADS SHOULD BE CONNECTED 50 FEET FROM ROAD EDGE BUT ON NARROW ROADS (20' OR LESS) ISLAND LENGTH SHALL BE 120 FEET.
7. WARNING SYSTEM APPROACH CIRCUIT DISTANCES ARE TO BE MEASURED FROM THE ISLAND TRACK CONNECTIONS.

NEW YORK

invensys Rail

PROJ #: OH2012065
DES BY: J. BRADY
CHK BY: D. ALBRIGHT
DATE: 07-30-12

( ) = EXISTING

300BND2.S01
REV. 05-06-05

CSX TRANSPORTATION
RAIL TRANSPORT GROUP ENGINEERING
COMMUNICATIONS AND SIGNALS

T.R. 144 (FERREE RD.) 538739A

TRACK AND SIGNAL PLAN
SIDNEY, OH M.P. QI-159.58

DESIGNED	DIGITIZED	CHECKED	DATE
IRC/JWB	IRC/JWB	IRC/DBA	07-30-12

DESIGN DATE	REV. NO.	DRAWING	SHEET NO	FILE	SHEET
07-30-12	1	-----	-----	Q115958	S01

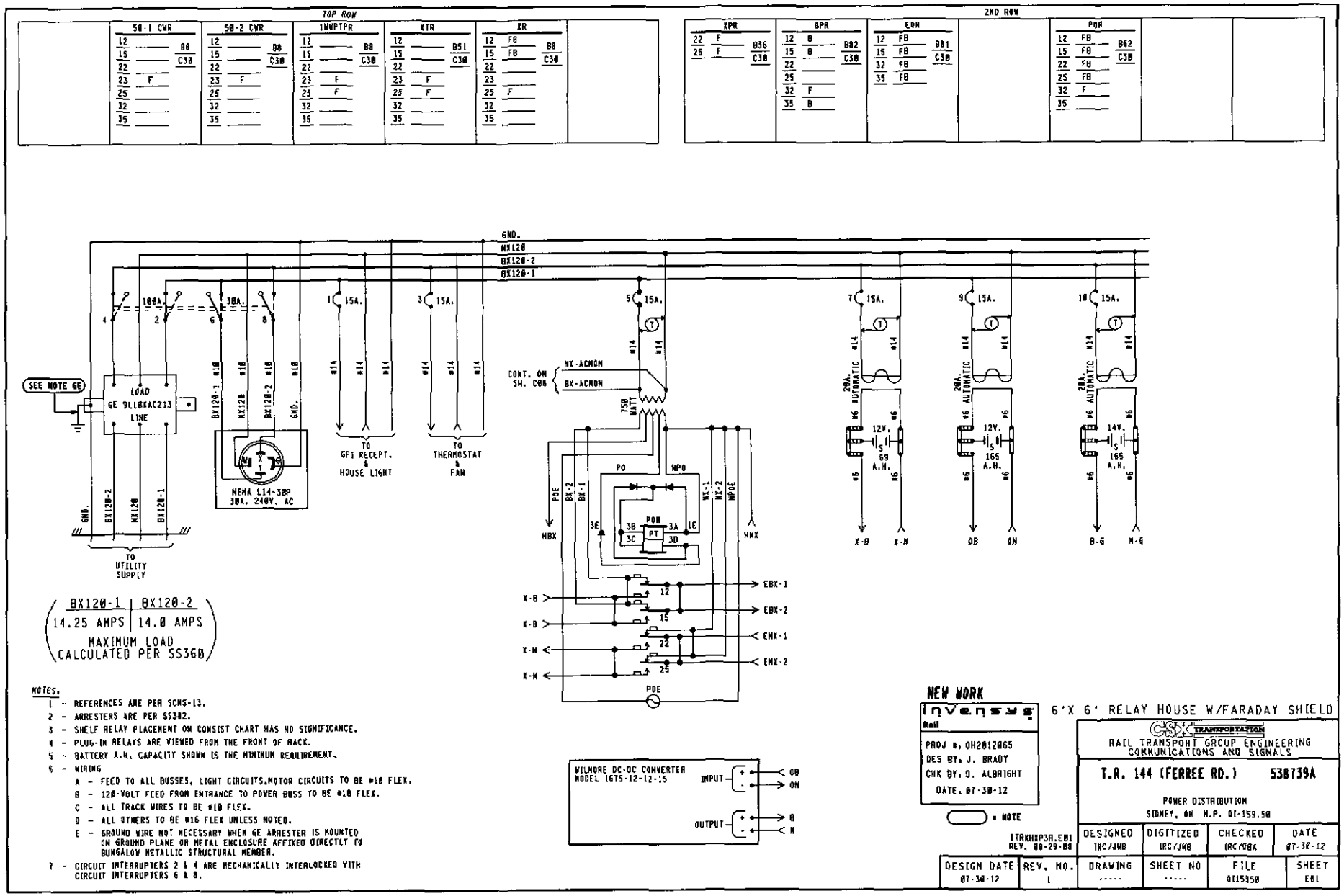

BX120-1	BX120-2
14.25 AMPS	14.0 AMPS

MAXIMUM LOAD CALCULATED PER SS360

NOTES.

1 - REFERENCES ARE PER SCHS-13.
2 - ARRESTERS ARE PER SS382.
3 - SHELF RELAY PLACEMENT ON CONSIST CHART HAS NO SIGNIFICANCE.
4 - PLUG-IN RELAYS ARE VIEWED FROM THE FRONT OF RACK.
5 - BATTERY A.H. CAPACITY SHOWN IS THE MINIMUM REQUIREMENT.
6 - WIRING
  A - FEED TO ALL BUSSES, LIGHT CIRCUITS,MOTOR CIRCUITS TO BE #18 FLEX.
  B - 120-VOLT FEED FROM ENTRANCE TO POWER BUSS TO BE #18 FLEX.
  C - ALL TRACK WIRES TO BE #18 FLEX.
  D - ALL OTHERS TO BE #16 FLEX UNLESS NOTED.
  E - GROUND WIRE NOT NECESSARY WHEN GE ARRESTER IS MOUNTED ON GROUND PLANE OR METAL ENCLOSURE AFFIXED DIRECTLY TO BUNGALOW METALLIC STRUCTURAL MEMBER.
7 - CIRCUIT INTERRUPTERS 2 & 4 ARE MECHANICALLY INTERLOCKED WITH CIRCUIT INTERRUPTERS 6 & 8.

WILMORE DC-DC CONVERTER
MODEL 16TS-12-12-15
INPUT: OB, ON
OUTPUT: B, N

NEW WORK

Invensys Rail

PROJ #. OH2812065
DES BY. J. BRADY
CHK BY. D. ALBRIGHT
DATE. 07-30-12

= NOTE

6'X 6' RELAY HOUSE W/FARADAY SHIELD

CSX TRANSPORTATION
RAIL TRANSPORT GROUP ENGINEERING
COMMUNICATIONS AND SIGNALS

T.R. 144 (FERREE RD.) 538739A

POWER DISTRIBUTION
SIDNEY, OH M.P. 01-159.50

ITRKHXP3A.E01
REV. 08-29-08

DESIGNED	DIGITIZED	CHECKED	DATE
IRC/JWB	IRC/JWB	IRC/DBA	07-30-12

DESIGN DATE	REV. NO.	DRAWING	SHEET NO	FILE	SHEET
07-30-12	1	-----	-----	0115358	E01

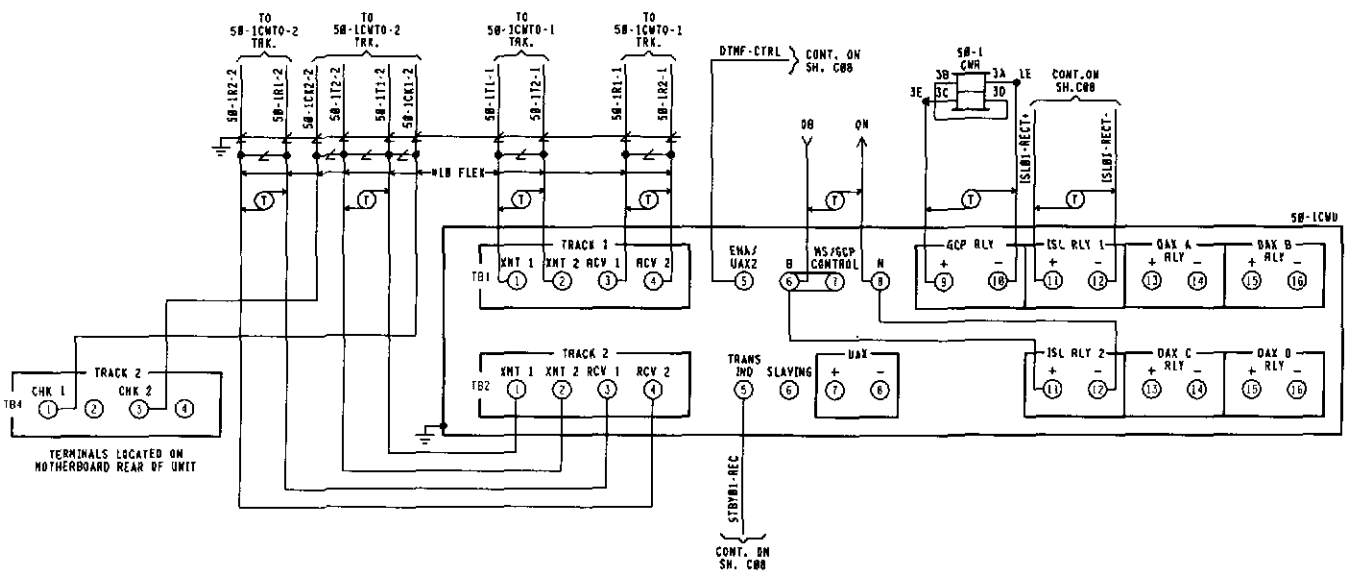

50-1CWU
300002 MODULES REQUIRED

M1	M2	M3	M4	M5	M6	M7	M8	M9	M10
00211 IPI ISLAND	00211 IPI ISLAND (NOT USED)	00012 TRANSCEIVER	00012 TRANSCEIVER	00013 RELAY DRIVE	00214 PROCESSOR	00115 RECORDER (NOT USED)	00016 DAX (NOT USED)	00016 DAX (NOT USED)	00020-1 CONTROL INTERFACE

M11	M12	M13	M14	M15	M16	M17	M18	M19	M20	M21
00211 IPI ISLAND	00211 IPI ISLAND (NOT USED)	00012 TRANSCEIVER	00012 TRANSCEIVER	00013 RELAY DRIVE	00214 PROCESSOR	00115 RECORDER (NOT USED)	00016 DAX (NOT USED)	00016 DAX (NOT USED)	00020-2 CONTROL INTERFACE	00020 TRANSFER TIMER

FRONT VIEW

NOTE:
FOR SIX-WIRE OPERATION, THE JUMPER LINKS CONNECTING TB4-1 AND 2 AND TB4-3 AND 4 SHOULD BE REMOVED FOR TRACK NUMBER 2 AND A SHORT LENGTH OF STRANDED TWISTED PAIR WIRE CONNECTED TO TERMINALS TB4-1 AND TB4-3. THE TWISTED PAIR WIRE IS THEN ROUTED THROUGH THE EXIT HOLE IN THE SIDE OF THE CASE AND TERMINATED AT AAR TERMINALS. A NUMBER 18 AWG TWISTED PAIR CAN THEN BE USED FOR INTERCONNECTING THE TRACK ARRESTERS.

IPI
MODULE 00211

SLOT M1 & M11
11.3KHZ

PLACE SHORTING BLOCK ACROSS 18.0KHZ PIN PAIRS

MODULE 00020
S4 DIP SWITCH POSITIONS *

SWITCH #	16	8	4	2	1
SWITCH POSITION	UP	DOWN	UP	DOWN	UP

* MAY BE SET PER FIELD CONDITIONS

MODULE 00020
S1 DIP SWITCH POSITIONS

SWITCH #	A	B	C	D
DAX USED	RIGHT	RIGHT	RIGHT	RIGHT

LEFT INDICATES DAX USED

NEW WORK

invensys
Rail

PROJ #. CH2812065
DES BY. J. BRADY
CHK BY. D. ALBRIGHT
DATE. 07-30-12

300MD2.C01
REV. 03-31-06

CSX TRANSPORTATION
RAIL TRANSPORT GROUP ENGINEERING
COMMUNICATIONS AND SIGNALS

T.R. 144 (FERREE RD.) 538739A

CROSSING DETECTION CIRCUITRY
SIDNEY, OH M.P. 01-159.50

DESIGNED	DIGITIZED	CHECKED	DATE
IRC/JWB	IRC/JWB	IRC/DBA	07-30-12

DESIGN DATE	REV. NO.	DRAWING	SHEET NO	FILE	SHEET
07-30-12	1	-----	-----	011595B	C01

3000 GCP APPLICATION DESIGN CARD

EQUIPMENT: 3000 [ ] 3000HO [ ] 3000D2 [■] 3000HD2 [ ]

ISLAND FREQUENCY: T1: 11.3 KHZ T2: N/A KHZ 50-1CMU

SOFTWARE LEVEL (DISPLAYED DURING BOOT-UP)		☆☆	
NUMBER OF TRACKS (NUMBER OF TRANSCEIVER MODULES, 1 OR 2)		1 [ ]	2 [■]
FREQUENCY (MS/GCP)	T1:	86	HZ
	T2:	156	HZ
UNIDIRECTIONAL / BIDIRECTIONAL	T1:	UNI [ ]	BI [■]
	T2:	UNI [ ]	BI [■]
XMIT LEVEL	T1:	HI [■]	MED [ ]
	T2:	HI [■]	MED [ ]
PREDICTOR/MOTION SENSOR	T1:	PRED [■]	MS [ ]
	T2:	PRED [■]	MS [ ]
WARNING TIME SELECTED	T1:	33	SEC.
	T2:	33	SEC.
APPROACH DISTANCE SELECTED	T1:	3476	FT.
	T2:	3476	FT.
APPROACH DISTANCE COMPUTED	T1:	NOT REQUIRED *	
	T2:	NOT REQUIRED *	
UAX PICKUP DELAY (UAX1) (0 = OFF)		0	SEC.
ENA/UAX2 DELAY (0 = ENA)		0	SEC.
ISLAND DISTANCE (BETWEEN FEED WIRES)	T1:	124	FT.
	T2:		FT.
NUMBER OF UAX'S		0 [■] 1 [ ] 2 [ ] 3 [ ] 4 [ ]	
UAX A TRACK ASSIGNMENT		T1 [ ]	T2 [ ]
UAX A DISTANCE (0 = PREEMPT)			FT.
UAX A WARNING TIME			SEC.
UAX B TRACK ASSIGNMENT		T1 [ ]	T2 [ ]
UAX B DISTANCE (0 = PREEMPT)			FT.
UAX B WARNING TIME			SEC.
UAX C TRACK ASSIGNMENT		T1 [ ]	T2 [ ]
UAX C DISTANCE (0 = PREEMPT)			FT.
UAX C WARNING TIME			SEC.
UAX D TRACK ASSIGNMENT		T1 [ ]	T2 [ ]
UAX D DISTANCE (0 = PREEMPT)			FT.
UAX D WARNING TIME			SEC.
SLAVING MASTER/SLAVE		MASTER [■]	SLAVE [ ]
PASSWORD ENABLED		DISABLED [■]	ENABLED [ ]
RECORDER INSTALLED		NOT INSTALLED [■]	INSTALLED [ ]
RS-232-C BAUD RATE			BPS
RS-232-C DATE BITES		7 [ ]	8 [ ]
RS-232-C STOP BITS		1 [ ]	2 [ ]
RS-232-C PARITY		NONE [ ]	MARK [ ]
		ODD [ ] EVEN [ ]	SPACE [ ]
DATE (E.G., MON 13 MAY 1991)		NOT REQUIRED *	
TIME (E.G., 06:25:41 PM)		NOT REQUIRED *	
DAYLIGHT SAVINGS		ON [■]	OFF [ ]

* PROGRAMMED AT INSTALLATION DURING CALIBRATION PROCEDURE

EXPANDED PROGRAMMING DESIGN

SWITCH TO MS (ENTER EZ VALUE)	T1:	10	EZ
	T2:	10	EZ
TRANSFER DELAY MS TO GCP (0 = OFF)	T1:	0	SEC.
	T2:	0	SEC.
PRIME PREDICTION OFFSET (0 = OFF)	T1:	0	FT.
	T2:	205	FT.
PICKUP DELAY PRIME		15	SEC.
PICKUP DELAY UAX A		0	SEC.
PICKUP DELAY UAX B		0	SEC.
PICKUP DELAY UAX C		0	SEC.
PICKUP DELAY UAX D		0	SEC.
COMPENSATION VALUE	T1:	NOT REQUIRED **	
COMPENSATION VALUE	T2:	NOT REQUIRED **	
ENHANCED DETECTION (ED)	T1:	ON [ ]	OFF [■]
	T2:	ON [ ]	OFF [■]
BACK TO BACK T1 AND T2 (WHEN ED IS ON)		NO [■]	YES [ ]
STATION STOP TIMER (WHEN ED IS ON)	T1:	N/A (SEE NOTE 1)	SEC.
	T2:	N/A	SEC.
# OF TRACK WIRES - 4 OR 6	T1:	4 [■]	6 [ ]
	T2:	4 [ ]	6 [■]
LOW EZ ADJUSTMENT	T1:	0	
	T2:	N/A	
LOW EZ DETECTION	T1:	ON [ ]	OFF [■]
	T2:	ON [ ]	OFF [■]
LOW EZ DETECTION TIMER	T1:	N/A (SEE NOTE 2)	MIN.
	T2:	N/A	MIN.
POSITIVE START (0 = OFF) (ENTER EZ VALUE)	T1:	0	EZ
	T2:	N/A	EZ
POSITIVE START TIMEOUT (0 = NONE) (WHEN POSITIVE START IS ON)	T1:	0	MIN.
	T2:	N/A	MIN.
SET AT OPERATION		NORMAL [■]	DIAGNOSTIC [ ]
DIAGNOSTIC MESSAGES		ON [ ]	OFF [■]
UAX MESSAGES		ON [ ]	OFF [■]
ADVANCE PREEMP TIMER (0 = OFF)		0	SEC.

** THE COMPENSATION VALUE IS PROVIDED BY THE 3000 GCP SYSTEM AND NO ADDITIONAL PROGRAMMING IS NORMALLY REQUIRED.

☆ = 120' MINIMUM ISLAND DISTANCE TO BE ENTERED BY FIELD PERSONNEL FOR NON-UAXING APPLICATIONS WHEN ROAD IS 20' OR LESS WIDE.

☆☆ = INDICATE ON AS-IN-SERVICE DRAWINGS

NOTES:

1. WHEN ED SET TO OFF, DEFAULT NOT DISPLAYED WHEN ED SET TO ON, DEFAULT IS 10 SEC.
2. WHEN LOW EZ DETECTION SET TO OFF, DEFAULT NOT DISPLAYED WHEN LOW EZ DETECTION SET TO ON, DEFAULT IS 10 MIN.

NEW WORK

Invensys Rail

PROJ #. 0H2012065
DES BY. J. BRADY
CHK BY. D. ALBRIGHT
DATE. 07-30-12

3000HD2.C02
REV. 05-06-05

CSX TRANSPORTATION
RAIL TRANSPORT GROUP ENGINEERING
COMMUNICATIONS AND SIGNALS

T.R. 144 (FERREE RD.) 538739A

DETECTION DEVICE PROGRAM
SIDNEY, OH M.P. 01-159.50

DESIGNED	DIGITIZED	CHECKED	DATE
IRC/JWB	IRC/JWB	IRC/DBA	07-30-12

DESIGN DATE	REV. NO.	DRAWING	SHEET NO	FILE	SHEET
07-30-12	1	-----	-----	Q115950	C02

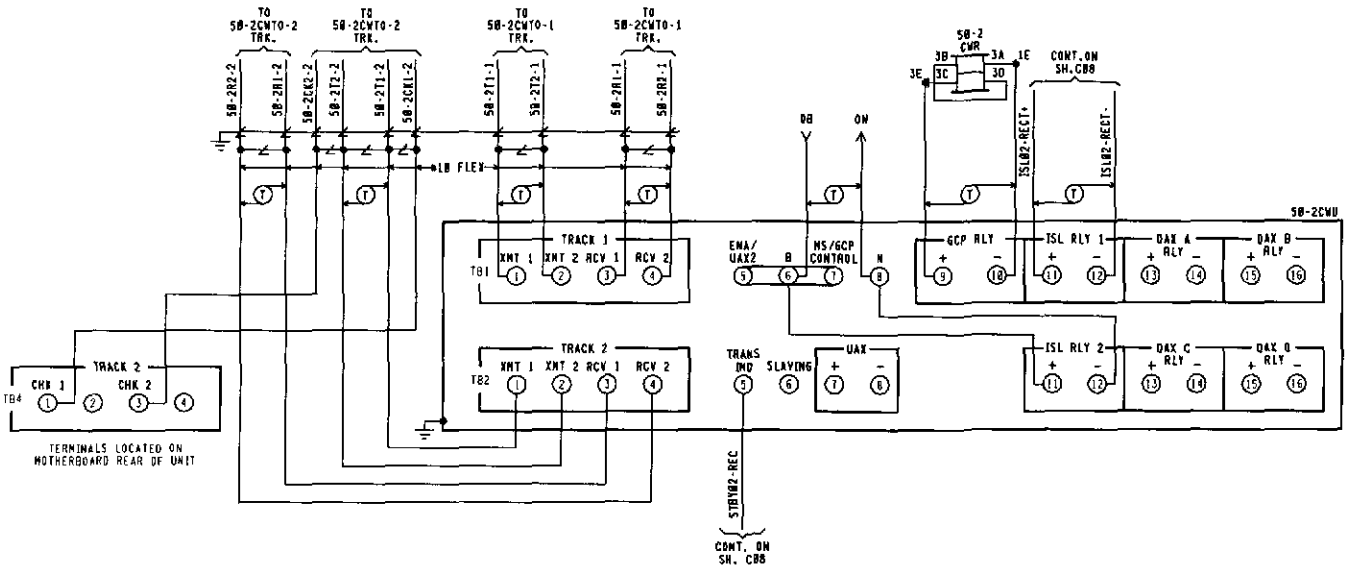

50-2CWU
300002 MODULES REQUIRED

80211 IPI ISLAND	80211 IPI ISLAND (NOT USED)	80012 TRANSCEIVER	80012 TRANSCEIVER	80013 RELAY DRIVE	80214 PROCESSOR	80115 RECORDER (NOT USED)	80016 DAX (NOT USED)	80016 DAX (NOT USED)	80020-1 CONTROL INTERFACE											
M1	M2	M3	M4	M5	M6	M7	M8	M9	M10											
80211 IPI ISLAND	80211 IPI ISLAND (NOT USED)	80012 TRANSCEIVER	80012 TRANSCEIVER	80013 RELAY DRIVE	80214 PROCESSOR	80115 RECORDER (NOT USED)	80016 DAX (NOT USED)	80016 DAX (NOT USED)	80020-2 CONTROL INTERFACE	80020 TRANSFER TIMER										
M11	M12	M13	M14	M15	M16	M17	M18	M19	M20	M21										

FRONT VIEW

NOTE:
FOR SIX-WIRE OPERATION, THE JUMPER LINKS CONNECTING TB4-1 AND 2 AND TB4-3 AND 4 SHOULD BE REMOVED FOR TRACK NUMBER 2 AND A SHORT LENGTH OF STRANDED TWISTED PAIR WIRE CONNECTED TO TERMINALS TB4-1 AND TB4-3. THE TWISTED PAIR WIRE IS THEN ROUTED THROUGH THE EXIT HOLE IN THE SIDE OF THE CASE AND TERMINATED AT AAR TERMINALS. A NUMBER 18 AWG TWISTED PAIR CAN THEN BE USED FOR INTERCONNECTING THE TRACK ARRESTERS.

IPI
MODULE 80211

SLOT M1 & M11
10.8KHZ

PLACE SHORTING BLOCK ACROSS 11.3KHZ PIN PAIRS

MODULE 80020
S4 DIP SWITCH POSITIONS*

SWITCH #	16	8	4	2	1
SWITCH POSITION	UP	DOWN	UP	DOWN	UP

*MAY BE SET PER FIELD CONDITIONS

MODULE 80020
S1 DIP SWITCH POSITIONS

SWITCH #	A	B	C	D
DAX USED	RIGHT	RIGHT	RIGHT	RIGHT

LEFT INDICATES DAX USED

NEW WORK

Invensys Rail

PROJ #. OH2012065
DES BY. J. BRADY
CHK BY. D. ALBRIGHT
DATE. 07-30-12

CSX TRANSPORTATION
RAIL TRANSPORT GROUP ENGINEERING
COMMUNICATIONS AND SIGNALS

T.R. 144 (FERREE RD.) 538739A

CROSSING DETECTION CIRCUITRY
SIDNEY, OH M.P. QI-159.50

300002.C01
REV. 03-31-06

DESIGN DATE	REV. NO.	DRAWING	SHEET NO	FILE	SHEET
07-30-12	1	-----	-----	011595B	C03

DESIGNED	DIGITIZED	CHECKED	DATE
IRC/JWB	IRC/JWB	IRC/DBA	07-30-12

3000 GCP APPLICATION DESIGN CARD

EQUIPMENT: 3000 [ ] 3000NO [ ] 3000D2 [■] 3000ND2 [ ]

ISLAND FREQUENCY: T1: 10.0 KHZ T2: N/A KHZ 50-2CNU

SOFTWARE LEVEL (DISPLAYED DURING BOOT-UP)		☆☆	
NUMBER OF TRACKS (NUMBER OF TRANSCEIVER MODULES, 1 OR 2)		1 [ ]	2 [■]
FREQUENCY (MS/GCP)	T1:	86	HZ
	T2:	156	HZ
UNIDIRECTIONAL / BIDIRECTIONAL	T1:	UNI [ ]	BI [■]
	T2:	UNI [ ]	BI [■]
INIT LEVEL	T1:	HI [■]	MED [ ]
	T2:	HI [■]	MED [ ]
PREDICTOR/MOTION SENSOR	T1:	PRED [■]	MS [ ]
	T2:	PRED [■]	MS [ ]
WARNING TIME SELECTED	T1:	33	SEC.
	T2:	33	SEC.
APPROACH DISTANCE SELECTED	T1:	3476	FT.
	T2:	3476	FT.
APPROACH DISTANCE COMPUTED	T1:	NOT REQUIRED *	
	T2:	NOT REQUIRED *	
UAX PICKUP DELAY (UAX1) (0 = OFF)		0	SEC.
ENA/UAX2 DELAY (0 = ENA)		0	SEC.
ISLAND DISTANCE (BETWEEN FEED WIRES)	T1:	124	FT.
	T2:		FT.
NUMBER OF DAX'S		0 [■] 1 [ ] 2 [ ] 3 [ ] 4 [ ]	
DAX A TRACK ASSIGNMENT		T1 [ ]	T2 [ ]
DAX A DISTANCE (0 = PREEMPT)			FT.
DAX A WARNING TIME			SEC.
DAX B TRACK ASSIGNMENT		T1 [ ]	T2 [ ]
DAX B DISTANCE (0 = PREEMPT)			FT.
DAX B WARNING TIME			SEC.
DAX C TRACK ASSIGNMENT		T1 [ ]	T2 [ ]
DAX C DISTANCE (0 = PREEMPT)			FT.
DAX C WARNING TIME			SEC.
DAX D TRACK ASSIGNMENT		T1 [ ]	T2 [ ]
DAX D DISTANCE (0 = PREEMPT)			FT.
DAX D WARNING TIME			SEC.
SLAVING MASTER/SLAVE		MASTER [■]	SLAVE [ ]
PASSWORD ENABLED		DISABLED [■]	ENABLED [ ]
RECORDER INSTALLED		NOT INSTALLED [■]	INSTALLED [ ]
RS-232-C BAUD RATE			BPS
RS-232-C DATE BITES		7 [ ]	8 [ ]
RS-232-C STOP BITS		1 [ ]	2 [ ]
RS-232-C PARITY		NONE [ ]	MARK [ ]
		ODD [ ] EVEN [ ]	SPACE [ ]
DATE (E.G., MON 13 MAY 1991)		NOT REQUIRED *	
TIME (E.G., 06.25.43 PM)		NOT REQUIRED *	
DAYLIGHT SAVINGS		ON [■]	OFF [ ]

* PROGRAMMED AT INSTALLATION DURING CALIBRATION PROCEDURE

EXPANDED PROGRAMMING DESIGN

SWITCH TO MS (ENTER EZ VALUE)	T1:	10	EZ
	T2:	10	EZ
TRANSFER DELAY MS TO GCP (0 = OFF)	T1:	0	SEC.
	T2:	0	SEC.
PRIME PREDICTION OFFSET (0 = OFF)	T1:	0	FT.
	T2:	205	FT.
PICKUP DELAY PRIME		15	SEC.
PICKUP DELAY DAX A		0	SEC.
PICKUP DELAY DAX B		0	SEC.
PICKUP DELAY DAX C		0	SEC.
PICKUP DELAY DAX D		0	SEC.
COMPENSATION VALUE	T1:	NOT REQUIRED **	
COMPENSATION VALUE	T2:	NOT REQUIRED **	
ENHANCED DETECTION (ED)	T1:	ON [ ]	OFF [■]
	T2:	ON [ ]	OFF [■]
BACK TO BACK T1 AND T2 (WHEN ED IS ON)		NO [■]	YES [ ]
STATION STOP TIMER (WHEN ED IS ON)	T1:	N/A (SEE NOTE 1)	SEC.
	T2:	N/A	SEC.
# OF TRACK WIRES - 4 OR 6	T1:	4 [■]	6 [ ]
	T2:	4 [ ]	6 [■]
LOW EX ADJUSTMENT	T1:	0	
	T2:	N/A	
LOW EZ DETECTION	T1:	ON [ ]	OFF [■]
	T2:	ON [ ]	OFF [■]
LOW EZ DETECTION TIMER	T1:	N/A (SEE NOTE 2)	MIN.
	T2:	N/A	MIN.
POSITIVE START (0 = OFF) (ENTER EZ VALUE)	T1:	0	EZ
	T2:	N/A	EZ
POSITIVE START TIMEOUT (0 = NONE) (WHEN POT(S)TIVE START IS ON)	T1:	0	MIN.
	T2:	N/A	MIN.
SET AT OPERATION		NORMAL [■]	DIAGNOSTIC [ ]
DIAGNOSTIC MESSAGES		ON [ ]	OFF [■]
DAX MESSAGES		ON [ ]	OFF [■]
ADVANCE PREEMP TIMER (0 = OFF)		0	SEC.

** THE COMPENSATION VALUE IS PROVIDED BY THE 3000 GCP SYSTEM AND NO ADDITIONAL PROGRAMMING IS NORMALLY REQUIRED.

☆ = 120' MINIMUM ISLAND DISTANCE TO BE ENTERED BY FIELD PERSONNEL FOR NON-DAXING APPLICATIONS WHEN ROAD IS 20' OR LESS WIDE.

☆☆ = INDICATE ON AS-IN-SERVICE DRAWINGS

NOTES:

1. WHEN ED SET TO OFF, DEFAULT NOT DISPLAYED
   WHEN ED SET TO ON, DEFAULT IS 10 SEC.
2. WHEN LOW EZ DETECTION SET TO OFF, DEFAULT NOT DISPLAYED
   WHEN LOW EZ DETECTION SET TO ON, DEFAULT IS 10 MIN.

NEW WORK

Invensys Rail

PROJ #. OH2812065
DES BY. J. BRADY
CHK BY. D. ALBRIGHT
DATE. 07-30-12

3000ND2.C02
REV. 05-06-05

CSX TRANSPORTATION
RAIL TRANSPORT GROUP ENGINEERING
COMMUNICATIONS AND SIGNALS

T.R. 144 (FERREE RD.) 538739A

DETECTION DEVICE PROGRAM
SIDNEY, OH M.P. 01-153.50

DESIGNED	DIGITIZED	CHECKED	DATE
JRC/JWB	JRC/JWB	JRC/DBA	07-30-12

DESIGN DATE	REV. NO.	DRAWING	SHEET NO	FILE	SHEET
07-30-12	1	-----	-----	011595B	C04

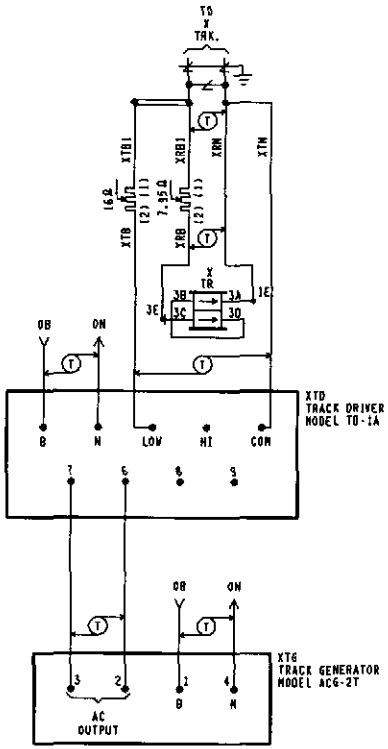

NEW WORK

Invensys Rail

PROJ #. GH2012065
DES BY. J. BRADY
CHK BY. D. ALBRIGHT
DATE. 07-30-12

CSX TRANSPORTATION
RAIL TRANSPORT GROUP ENGINEERING
COMMUNICATIONS AND SIGNALS

T.R. 144 (FERREE RD.) 538739A

CROSSING DETECTION CIRCUITRY
SIDNEY, OH M.P. QI-159.58

IRJNG10-1TK.C01
REV. 02-28-05

DESIGNED	DIGITIZED	CHECKED	DATE
IRC/JWB	IRC/JWB	IRC/DBA	07-30-12

DESIGN DATE	REV. NO.	DRAWING	SHEET NO	FILE	SHEET
07-30-12	1	-----	-----	QI15950	C05

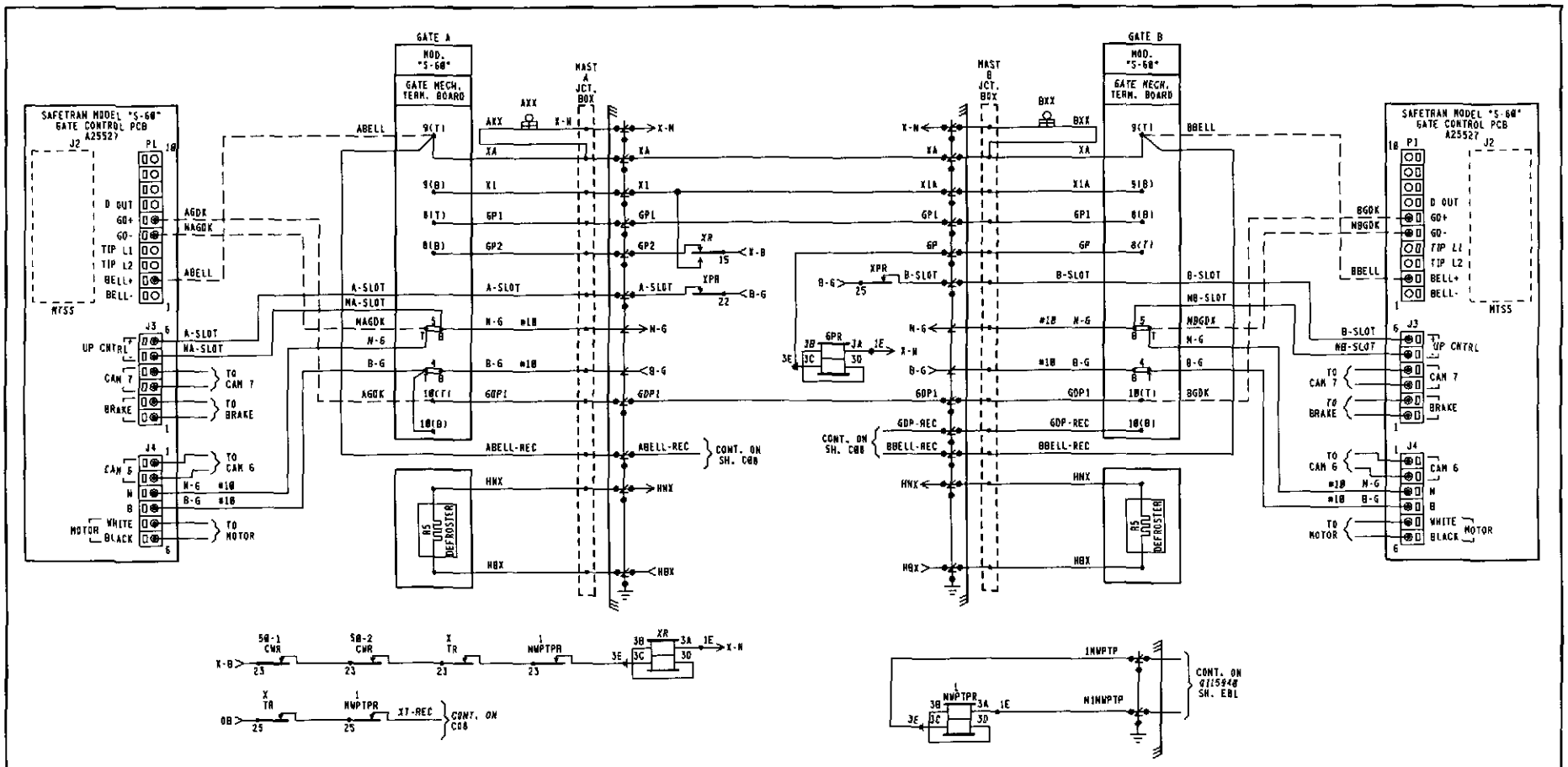
SAFETRAN MODEL "S-60" GATE CONTROL PCB A25527
GATE A MOD. "S-60"
GATE MECH. TERM. BOARD
MAST A JCT. BOX
MAST B JCT. BOX
GATE B MOD. "S-60"
GATE MECH. TERM. BOARD
SAFETRAN MODEL "S-60" GATE CONTROL PCB A25527
CONT. ON SH. C08
CONT. ON SH. E01
CONT. ON C08
NEW WORK
Invensys Rail
PROJ #. 0H2B12065
DES BY. J. BRADY
CHK BY. D. ALBRIGHT
DATE. 07-30-12
CSX TRANSPORTATION
RAIL TRANSPORT GROUP ENGINEERING COMMUNICATIONS AND SIGNALS
T.R. 144 (FERREE RD.) 538739A
CROSSING WARNING DEVICE GATE CIRCUITRY
STONEY, ON N.P. QL-159.58
DESIGNED IRC/JWB
DIGITIZED IRC/JWB
CHECKED IRC/DBA
DATE 07-30-12
DESIGN DATE 07-30-12
REV. NO. 1
DRAWING
SHEET NO
FILE 0115958
SHEET C06

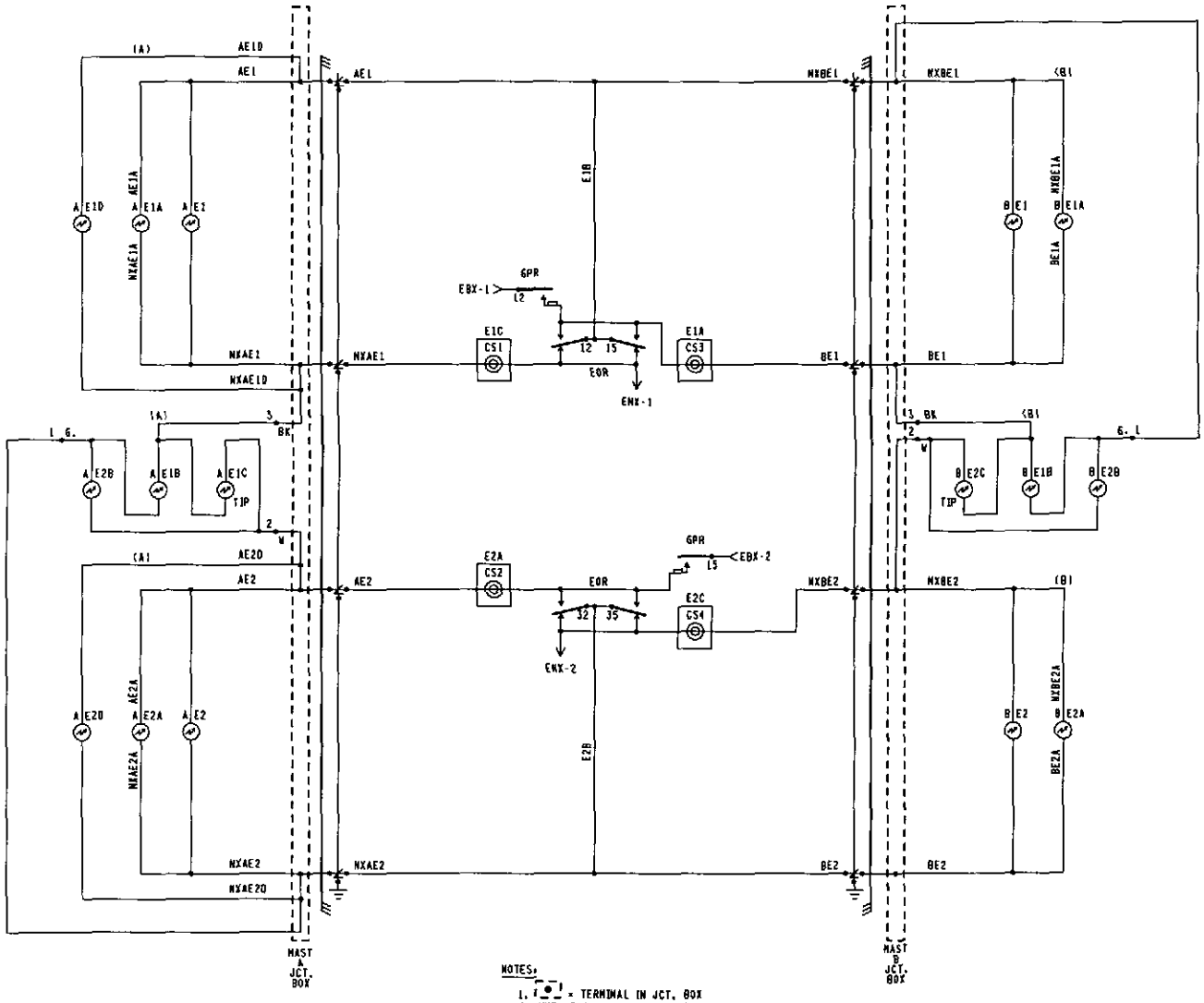

NOTES:

1. ⊥ ● ⊥ = TERMINAL IN JCT. BOX
2. WHEN 7 OR MORE LIGHTS ON A SINGLE STRUCTURE REFER TO SS-382 FOR REQUIRED ARRESTER RATING.

NEW WORK

Invensys Rail

PROJ #. OH2012065
DES BY. J. BRADY
CHK BY. D. ALBRIGHT
DATE. 07-30-12

CSX TRANSPORTATION
RAIL TRANSPORT GROUP ENGINEERING
COMMUNICATIONS AND SIGNALS

T.R. 144 (FERREE RD.) 538739A

CROSSING WARNING DEVICE LIGHT CIRCUITRY
SIDNEY, OH M.P. QI-159.58

3808N02.C04
REV. 05-06-05

DESIGNED	DIGITIZED	CHECKED	DATE
IRC/JWB	IRC/JWB	IRC/DBA	07-30-12

DESIGN DATE	REV. NO.	DRAWING	SHEET NO	FILE	SHEET
07-30-12	1	-----	-----	0115950	C07

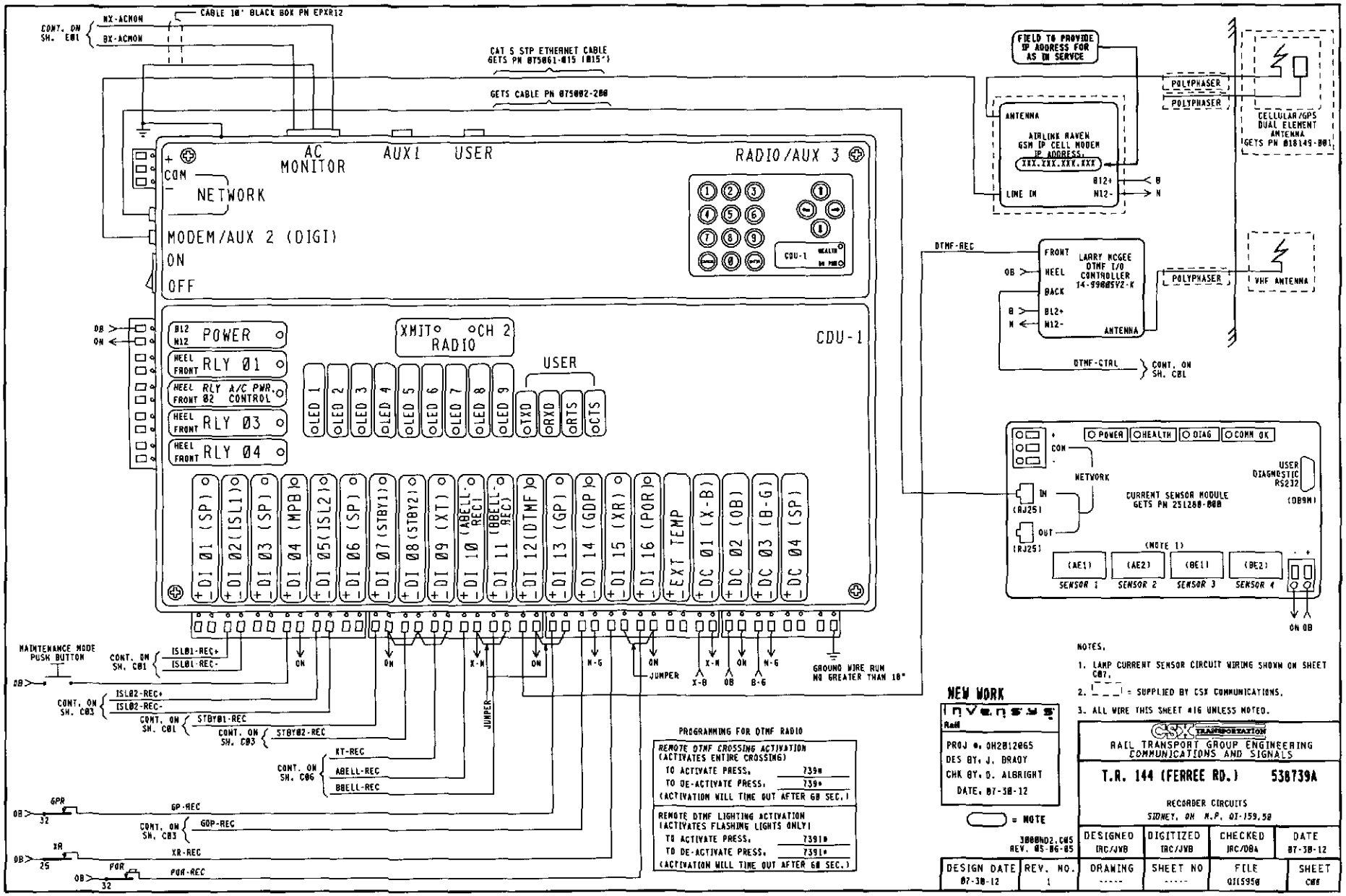
CABLE 10' BLACK BOX PN EPXR12
CONT. ON SH. E01
NX-ACMON
BX-ACMON
CAT 5 STP ETHERNET CABLE GETS PN 075061-015 (015')
GETS CABLE PN 075002-200
FIELD TO PROVIDE IP ADDRESS FOR AS IN SERVICE
POLYPHASER
POLYPHASER
CELLULAR/GPS DUAL ELEMENT ANTENNA GETS PN 018149-001
ANTENNA
AIRLINK RAVEN GSM IP CELL MODEM
IP ADDRESS:
XXX.XXX.XXX.XXX
LINE IN
B12+
N12-
B
N
AC MONITOR
AUX1
USER
RADIO/AUX 3
COM
NETWORK
MODEM/AUX 2 (DIGI)
ON
OFF
CDU-1
HEALTH
ON PWR
DTMF-REC
FRONT
HEEL
BACK
LARRY MCGEE DTMF I/O CONTROLLER 14-99005V2-K
ANTENNA
POLYPHASER
VHF ANTENNA
DTMF-CTRL
CONT. ON SH. CB1
POWER
RLY 01
RLY 02 A/C PWR. CONTROL
RLY 03
RLY 04
XMIT
CH 2
RADIO
CDU-1
LED 1
LED 2
LED 3
LED 4
LED 5
LED 6
LED 7
LED 8
LED 9
USER
TXD
RXD
RTS
CTS
DI 01 (SP)
DI 02 (ISL1)
DI 03 (SP)
DI 04 (MPB)
DI 05 (ISL2)
DI 06 (SP)
DI 07 (STBY1)
DI 08 (STBY2)
DI 09 (XT)
DI 10 (ABELL-REC1)
DI 11 (BBELL-REC)
DI 12 (DTMF)
DI 13 (GP)
DI 14 (GDP)
DI 15 (XR)
DI 16 (POR)
EXT TEMP
DC 01 (X-B)
DC 02 (OB)
DC 03 (B-G)
DC 04 (SP)
POWER
HEALTH
DIAG
COMM OK
CON
NETWORK
IN
(RJ25)
OUT
(RJ25)
CURRENT SENSOR MODULE GETS PN 251280-000
USER DIAGNOSTIC RS232
(DB9M)
(NOTE 1)
(AE1)
(AE2)
(BE1)
(BE2)
SENSOR 1
SENSOR 2
SENSOR 3
SENSOR 4
ON OB
MAINTENANCE MODE PUSH BUTTON
CONT. ON SH. C01
ISL01-REC+
ISL01-REC-
CONT. ON SH. C03
ISL02-REC+
ISL02-REC-
CONT. ON SH. C01
STBY01-REC
CONT. ON SH. C03
STBY02-REC
CONT. ON SH. C06
XT-REC
ABELL-REC
BBELL-REC
JUMPER
GROUND WIRE RUN NO GREATER THAN 18"
6PR
GP-REC
CONT. ON SH. C03
GDP-REC
XR
XR-REC
POR
POR-REC
NOTES.
1. LAMP CURRENT SENSOR CIRCUIT WIRING SHOWN ON SHEET C07.
2. = SUPPLIED BY CSX COMMUNICATIONS.
3. ALL WIRE THIS SHEET #16 UNLESS NOTED.
PROGRAMMING FOR DTMF RADIO
REMOTE DTMF CROSSING ACTIVATION (ACTIVATES ENTIRE CROSSING)
TO ACTIVATE PRESS. 739#
TO DE-ACTIVATE PRESS. 739*
(ACTIVATION WILL TIME OUT AFTER 60 SEC.)
REMOTE DTMF LIGHTING ACTIVATION (ACTIVATES FLASHING LIGHTS ONLY)
TO ACTIVATE PRESS. 7391#
TO DE-ACTIVATE PRESS. 7391*
(ACTIVATION WILL TIME OUT AFTER 60 SEC.)
NEW WORK
Invensys Rail
PROJ #. 0H2012065
DES BY. J. BRADY
CHK BY. D. ALBRIGHT
DATE. 07-30-12
= NOTE
3000ND2.CMS
REV. 05-06-05
CSX TRANSPORTATION
RAIL TRANSPORT GROUP ENGINEERING
COMMUNICATIONS AND SIGNALS
T.R. 144 (FERREE RD.) 538739A
RECORDER CIRCUITS
SIDNEY, OH N.P. 01-159.50
DESIGNED IRC/JVB
DIGITIZED IRC/JVB
CHECKED IRC/DBA
DATE 07-30-12
DESIGN DATE 07-30-12
REV. NO. 1
DRAWING
SHEET NO
FILE 01C5950
SHEET C06

	DEFAULTS AND/OR STYLE	FIELD RECORD
HAWK EXECUTIVE PROGRAM	VERSION 2.7, COMPILED ON NOV. 11, 2003	VERSION ____, COMPILED ON _____ (FIELD TO ENTER)
CSXT USER PROGRAM (IF LOADED)	VERSION 1.01, COMPILED ON 12-01-03 (MM-DD-YY)	VERSION ____, COMPILED ON _____ (FIELD TO ENTER)
SYSTEM SETTINGS		
DATE & TIME ENABLE DAYLIGHT SAVINGS TIME = Y (YES)	MM-DD-YY 23:01:59	n/a
MILE POST	XYZ-789.01	159.50
SITE NAME	MAIN ST (SR-1T,US-1)	T.R. 144 (FERREE RD)
DOT NUMBER	123456A	538739A

NOTE TO INSPECTOR: AT IN SERVICE OF HAWK OR UPDATE OF ITS INTERNAL EXECUTIVE PROGRAM OR ITS CSXT USER PROGRAM, THE VERSION NUMBER AND COMPILE DATES OF EACH PROGRAM MUST BE INSERTED IN THE BLANK FIELDS.

BATTERY INPUTS	DC 01	DC 02	DC 03	DC 04
CHANNEL	1	2	3	4
BATTERY CHANNEL NAMES	X-B BULB BATTERY	DB ELECTRONIC BATTERY	B-G GATE BATTERY	SPARE
BATTERY CHANNEL I.D.	X-B	DB	B-G	SP
SAMPLE PERIOD	500 ms	500 ms	500 ms	10,000 ms
RESOLUTION	00.2 V	00.2 V	01.0 V	02.0 V

DIGITAL INPUTS	DI 01	DI 02	DI 03	DI 04	DI 05
CHANNEL	1	2	3	4	5
NAME		ISLAND TRACK 1		MAINTENANCE PB	ISLAND TRACK 2
ID	SP	ISL1	SP	MPB	ISL2
ON NAME		ISL1 UP		MAINTENANCE PB HI	ISL2 UP
OFF NAME		ISL1 DN		MAINTENANCE PB LOW	ISL2 DN
ON DEBOUNCE TIME	1000 ms	100 ms	1000 ms	1000 ms	1000 ms
OFF DEBOUNCE TIME	1000 ms	100 ms	1000 ms	1000 ms	1000 ms
TOGGLE PERIOD	500 ms	500 ms	500 ms	500 ms	500 ms

DIGITAL INPUTS	DI 06	DI 07	DI 08	DI 09	DI 10
CHANNEL	6	7	8	9	10
NAME		STANDBY1	STANDBY2	SPUR TRACK	ABELL REC
ID	SP	STBY1	STBY2	XT	ABELL-REC
ON NAME		PRIMARY UNIT	PRIMARY UNIT	SPUR TRACK UP	ABELL ON
OFF NAME		STANDBY UNIT	STANDBY UNIT	SPUR TRACK ON	ABELL OFF
ON DEBOUNCE TIME	1000 ms	100 ms	100 ms	100 ms	100 ms
OFF DEBOUNCE TIME	1000 ms	100 ms	100 ms	100 ms	100 ms
TOGGLE PERIOD	500 ms	500 ms	500 ms	500 ms	500 ms

DIGITAL INPUTS	DI 11	DI 12	DI 13	DI 14	DI 15	DI 16
CHANNEL	11	12	13	14	15	16
NAME	ABELL REC	DTHF/TEST	GPR	GDP	XR	AC POWER OFF
ID	ABELL-REC	DTHF	GPR	GDP	XR	POR
ON NAME	ABELL ON	DTHF/TEST ON	GATE VERTICAL	GATE HORIZ	XR UP	AC POWER ON
OFF NAME	ABELL OFF	DTHF/TEST OFF	LIGHTS FLASH	NOT HORIZ	XR DN	AC POWER OFF
ON DEBOUNCE TIME	100 ms	100 ms	100 ms	100 ms	100 ms	100 ms
OFF DEBOUNCE TIME	100 ms	100 ms	100 ms	100 ms	100 ms	100 ms
TOGGLE PERIOD	500 ms	500 ms	500 ms	500 ms	500 ms	500 ms

MODULE-DIGITAL 4 QUAD CURRENT SENSOR SERIAL NUMBER: (_____) (BLANK UNTIL AIS RECEIVED)				
RESOLUTION (AMPS RMS) : (00.2) AMPS				
AUTOMATICALLY ALLOCATED DIGITAL INPUT	DI 17	DI 18	DI 19	DI 20
DIGITAL 4 QUAD CURRENT SENSOR	1	2	3	4
NAME	E1C	E2A	E1A	E2C
ID	E1C	E2A	E1A	E2C
LIT BULB COUNT ON EACH CIRCUIT	5	5	4	4
CURRENT READING IN AMPS AT APPROXIMATE LB.B VOLTS BULB VOLTAGE	3.6	3.6	2.6	2.6

CHANNEL	1	2	3	4
NAME	RELAY OUTPUT 01	RELAY OUTPUT 02	RELAY OUTPUT 03	RELAY OUTPUT 04
I.D.	RLY01	RLY02	RLY03	RLY04
ON NAME	ON	ON	ON	ON
OFF NAME	OFF	OFF	OFF	OFF
PULSE DURATION	*1000 ms*	*1000 ms*	*1000 ms*	*1000 ms*

PORT	USER	AUX 1	MODEM/AUX 2
BAUD RATE	38400	9600	9600
PARITY	N	N	N
DATA BITS	8	8	8
STOP BITS	1	1	1
FLOW CONTROL	NONE	NONE	NONE

NEW WORK

Invensys Rail

PROJ #. ON2012065
DES BY. J. BRADY
CHK BY. D. ALBRIGHT
DATE. 07-30-12

= NOTE

3008MD2.C06
REV. 05-06-05

CSX TRANSPORTATION
RAIL TRANSPORT GROUP ENGINEERING
COMMUNICATIONS AND SIGNALS

T.R. 144 (FERREE RD.) 538739A

RECORDER PROGRAM
SIDNEY, OH M.P. 01-159.50

DESIGNED	DIGITIZED	CHECKED	DATE
IRC/JWB	IRC/JWB	IRC/DBA	07-30-12

DESIGN DATE	REV. NO.	DRAWING	SHEET NO	FILE	SHEET
07-30-12	L	-----	-----	0115958	C09

INDEX

SH. NO.	CONTENTS	REVISION NO. 1	2	3	4	5	6	7
1ØL	TITLE, INDEX AND REVISIONS	✓	✓	✓				
SØ1	LOCATION PLAN	✓		✓				
EØ1	POWER DISTRIBUTION, CABLE CIRCUITS AND NWP CIRCUITS	✓		✓				
CØ1	ELECTRO CODE 4 TRACK 1 CIRCUITS	✓		✓				
CØ2	ELECTRO CODE 4 TRACK 2 CIRCUITS	✓		✓				
CØ3	DED CIRCUITS	✓		✓				
CØ4	MICRO TALKER CIRCUITS	✓	✓	✓				
CØ5	RACK DETAILS			✓				
CØ6	TERMINAL BOARD ARRANGEMENT			✓				

NOTES

◯ = FOR MATERIAL REFERENCE SEE PLAN S-1002

⊗ = DENOTES TWISTED PAIR
GROUND IN ACCORDANCE WITH CS-9001-A

INVENSYS Rail
PROJ #: OH2012065
DES BY: J. BRADY
CHK BY: D. ALBRIGHT
DATE: 07-30-12

= IN
= NOTE

REVISIONS

1 5-29-98 LSTS LSTS LSTS
NEW PLAN DRAWN ACCOUNT OF ELECTRO CODE FOUR INSTALLED FROM SIGS. 1501/1502 TO SIGS. 1701/1702.
SIGNALS RENUMBERED.
CSX PROJECT NO:OH1999163
WO/AFE NO: 39911 PFC. NO. 2
IN SERVICE: 02-17-99
PER: MLH
REVISED: 04-25-00 HAR CWW

2 7-08-98 LSTS LSTS LSTS
ELECTRO CODE FOUR CHASSIS STRAPPING ID NUMBER REVISED
WO/AFE NO: 39911 PFC. NO. 2
IN SERVICE: 2-17-99
PER: MLH

3 03-20-01 SWE ATS MJH
UPGRADE D. E. D.
REVISED: 11-01-01
WO/AFE A24674
CSXT PROJ # IN2000072
IN SERVICE: 06-08-01
PER: R.A. GOURLEY SWE SWE

4 07-30-12 JWB DBA DBA
PLAN REVISED ACCOUNT OF INSTALLATION FLS & GATES AT T.R. 144 (FERCE RD.)
CSX PROJ. NO: OH2012065
CSX OP/AFE NO: OH0898
IN SERVICE:
PER:
REVISED:

REVISE TITLE BLOCK TO CURRENT STANDARD ON A.I.S.

CSX TRANSPORTATION
RAIL TRANSPORT GROUP ENGINEERING
COMMUNICATIONS AND SIGNALS

CRESTLINE TO CP-IN
FASCO, OHIO
TITLE, INDEX AND REVISIONS
SIGNALS 1591 & 1592, MP. 81-153.48

DESIGNED	DIGITIZED	CHECKED	DATE
LSTS	HAR/CWW	LSTS	05-29-98

DRAWING	SHEET NO	NEXT SH	NEXT FILE	NEXT SH	FILE	SHEET
8305-1594	1	2	011594B	SØ1	011594B	1Ø1

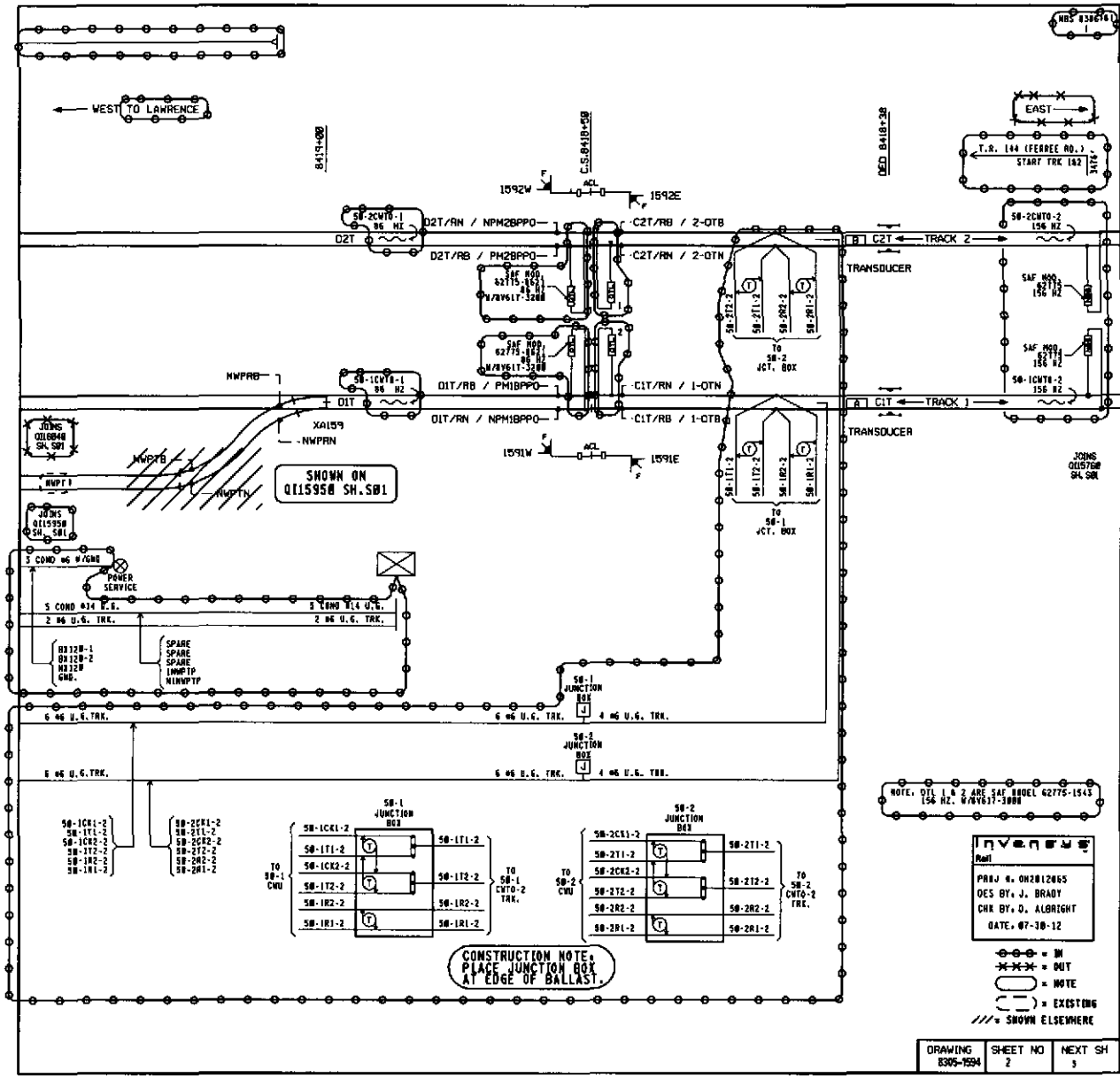

REVISIONS	
04-25-00 HAR OH1995153	
11-01-2001 SWE	IN2000072

Ref

PROJ #. OH2012065
DES BY. J. BRADY
CHK BY. D. ALBRIGHT
DATE. 07-30-12

REVISE TITLE BLOCK TO
CURRENT STANDARD
ON A.I.S.

CSX TRANSPORTATION
RAIL TRANSPORT GROUP ENGINEERING
COMMUNICATIONS AND SIGNALS

CRESTLINE TO CP-IU
PASCO, OHIO
LOCATION PLAN
SIGNALS 1591 & 1592, MP. QJ-159.40

DRAWING	SHEET NO	NEXT SH
8305-1594	2	3

DESIGNED	DIGITIZED	CHECKED	DATE
LSTS	HAR/CWW	LSTS	05-29-98

NEXT FILE	NEXT SH	FILE	SHEET
QI15940	END	QI15940	SØ1

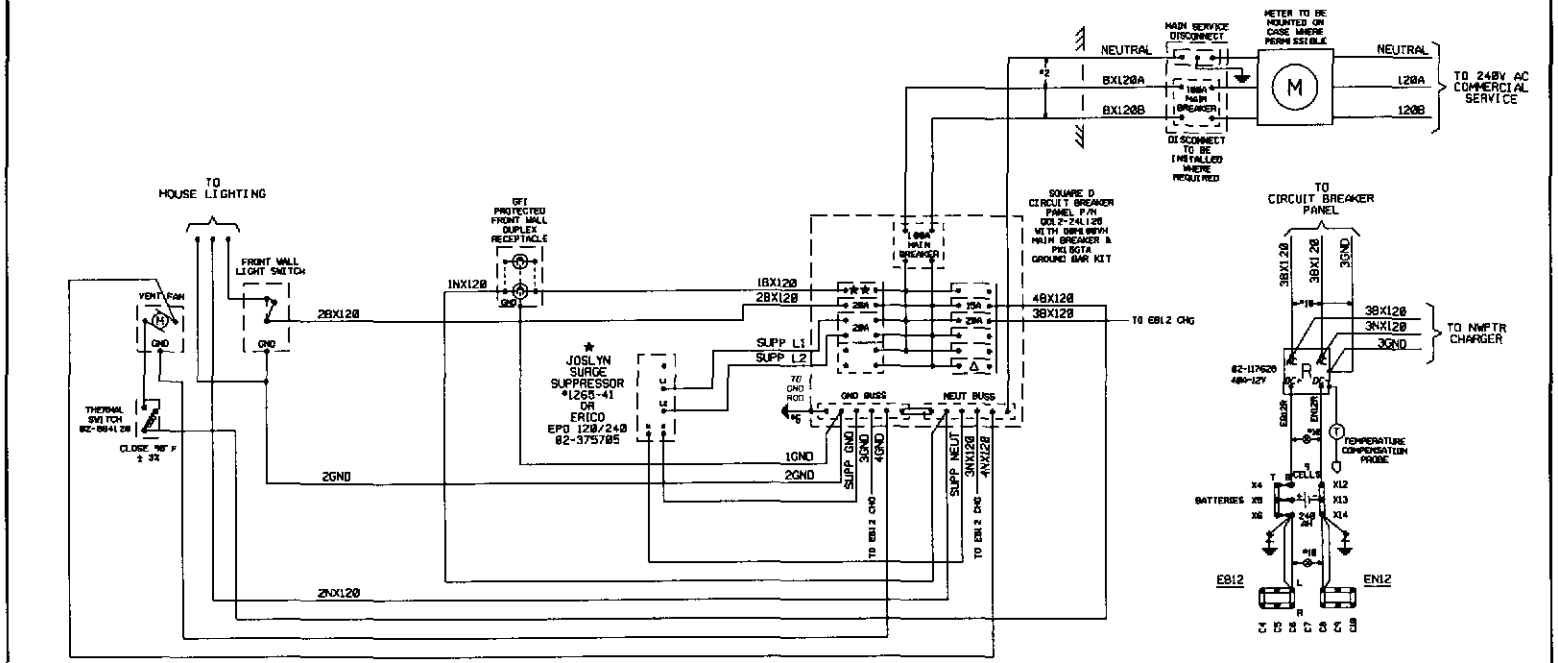

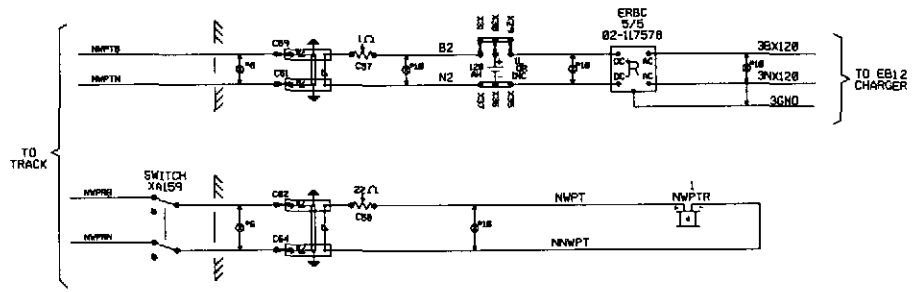

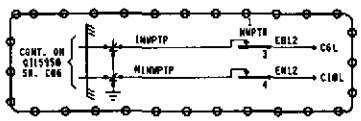

NOTES:

1) 3 CONDUCTOR #12 CABLE TO BE RUN TO EACH CHARGER, ETC FOR BX120, NX120 & GND.
2) ★= SUPPRESSOR TO BE LOCATED AS CLOSE AS POSSIBLE TO *MAIN BREAKER. LEADS TO BE* TWISTED WHENEVER POSSIBLE.
3) 100A SERVICE REQUIRES #2 WIRE. 60A SERVICE REQUIRES #6 WIRE.
4) ALL AC POWER WIRING TO BE IN CONDUIT.
5) MAXIMUM BREAKER LOAD NOT TO EXCEED 80% OF RATING (IE. 20A BREAKER GOOD FOR 16A).
6) Δ = 20A CIRCUIT BREAKER RESERVED FOR COMMUNICATIONS.

⊗ = TWISTED PAIR

★ = 20A GROUND FAULT CIRCUIT BREAKER

REVISE TITLE BLOCK TO CURRENT STANDARD ON A.I.S.

Rail
PROJ #. OH2012065
DES BY. J.BRADY
CHK BY. D. ALBRIGHT
DATE. 07-30-12

⊗ = IN
⬭ = NOTE

REVISIONS	
04-25-00 KAR OH1999153	
11-01-2001 SVE	OH2000072

CSX TRANSPORTATION
RAIL TRANSPORT GROUP ENGINEERING
COMMUNICATIONS AND SIGNALS

CRESTLINE TO CP-IU
PASCO, OHIO
POWER DISTRIBUTION, CABLE CIRCUITS AND NWP CIRCUITS
SIGNALS 1591 & 1592, MP. 01-159.4M

DESIGNED	DIGITIZED	CHECKED	DATE
LSTS	KAR/CWN	LSTS	05-29-98

DRAWING	SHEET NO	NEXT SH	NEXT FILE	NEXT SH	FILE	SHEET
8305-1594	3	4	015948	C01	015948	E01

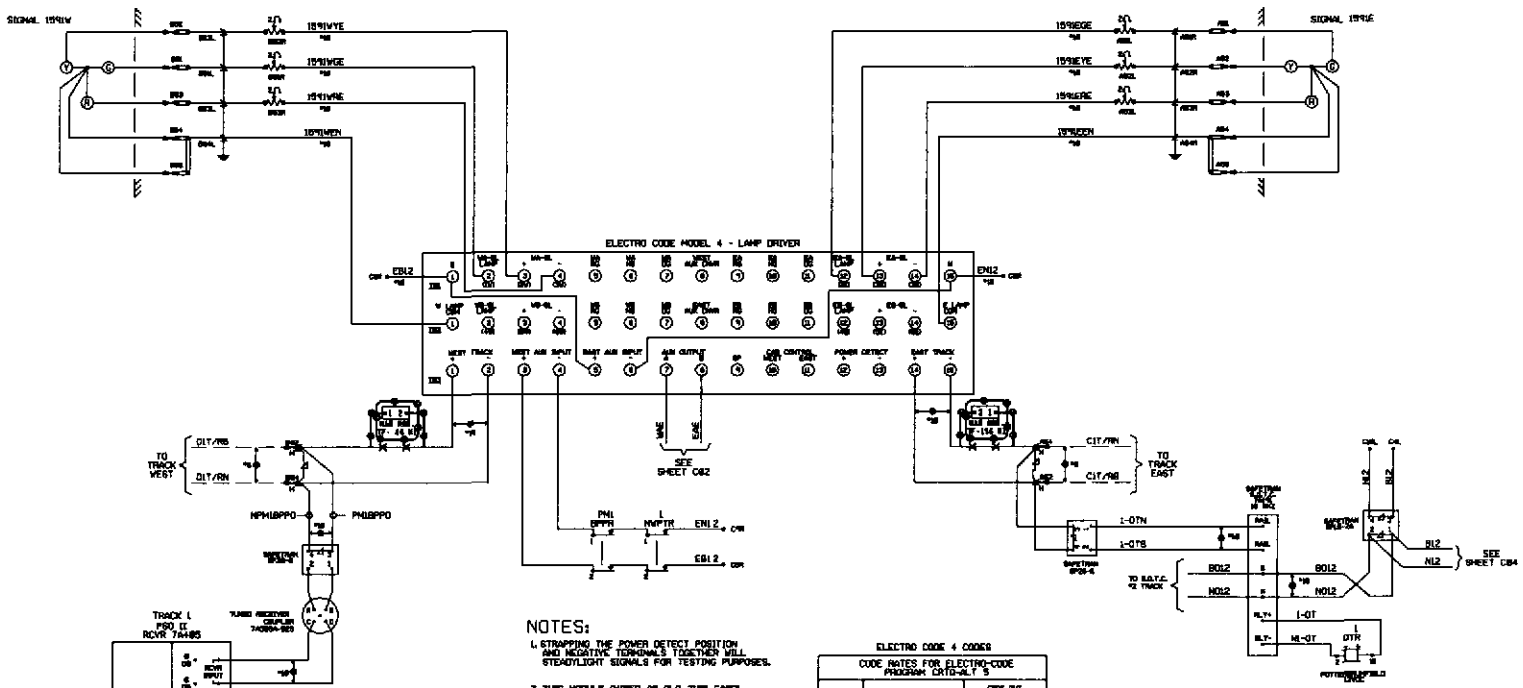

NOTES:

1. STRAPPING THE POWER DETECT POSITION AND NEGATIVE TERMINALS TOGETHER WILL STEADYLIGHT SIGNALS FOR TESTING PURPOSES.
2. 2180 MODULE WIRED AS OLD 2150 CARDS JUMPER 8 REMOVED A, C & D LEFT ON.
3. CODE 5 SELECT SWITCHES.

	SL
EAST C1	4-CLOSE
C2	3-CLOSE
WEST C1	2-OPEN
C2	1-CLOSE

CODE 5 SELECT SWITCHES LOCATED ON 215 MODULE

ELECTRO CODE 4 CODES

CODE RATES FOR ELECTRO-CODE PROGRAM CRTD-ALT 5

CODE IN	USAGE	CODE OUT AIC JUMPER OUT	CODE OUT AIC JUMPER INFECT
1	TRACK CIRCUIT	1	1
3	ADVANCE APPROACH	7	7
3	APPROACH MEDIUM	7	7
4	APPROACH LIMITED	7	7
5	BLOCK SAFE NON-VITAL	5	5
6	TUMBLEDOWN	6	6
7	CLEAR	7	7
8	APPROACH	8	7
NO CODE	STOP AND PROCEED	1 & 8	1 & 6

REVISE TITLE BLOCK TO CURRENT STANDARD ON A.I.S.

PROJ #. 0020120663
DES BY. J. BRADY
CHK BY. D. ALBRIGHT
DATE: 07-30-12

REVISIONS
04-29-08 NAB 0N1599155
11-01-2001 SHE 0020000071

CSX TRANSPORTATION
RAIL TRANSPORT GROUP ENGINEERING
COMMUNICATIONS AND SIGNALS

CRESTLINE TO CP-IU
PARCK, OHIO
ELECTRO CODE & TRACK I CIRCUITS
SIGNALS 1591 & 1592, MP. 01-159.40

DESIGNED	DIGITIZED	CHECKED	DATE
LST5	NAR/CVW	LST5	05-21-96

DRAWING	SHEET NO	NEXT SH	NEXT FILE	NEXT SH	FILE	SHEET
5305-1594	4	5	4115348	C82	0115948	C81

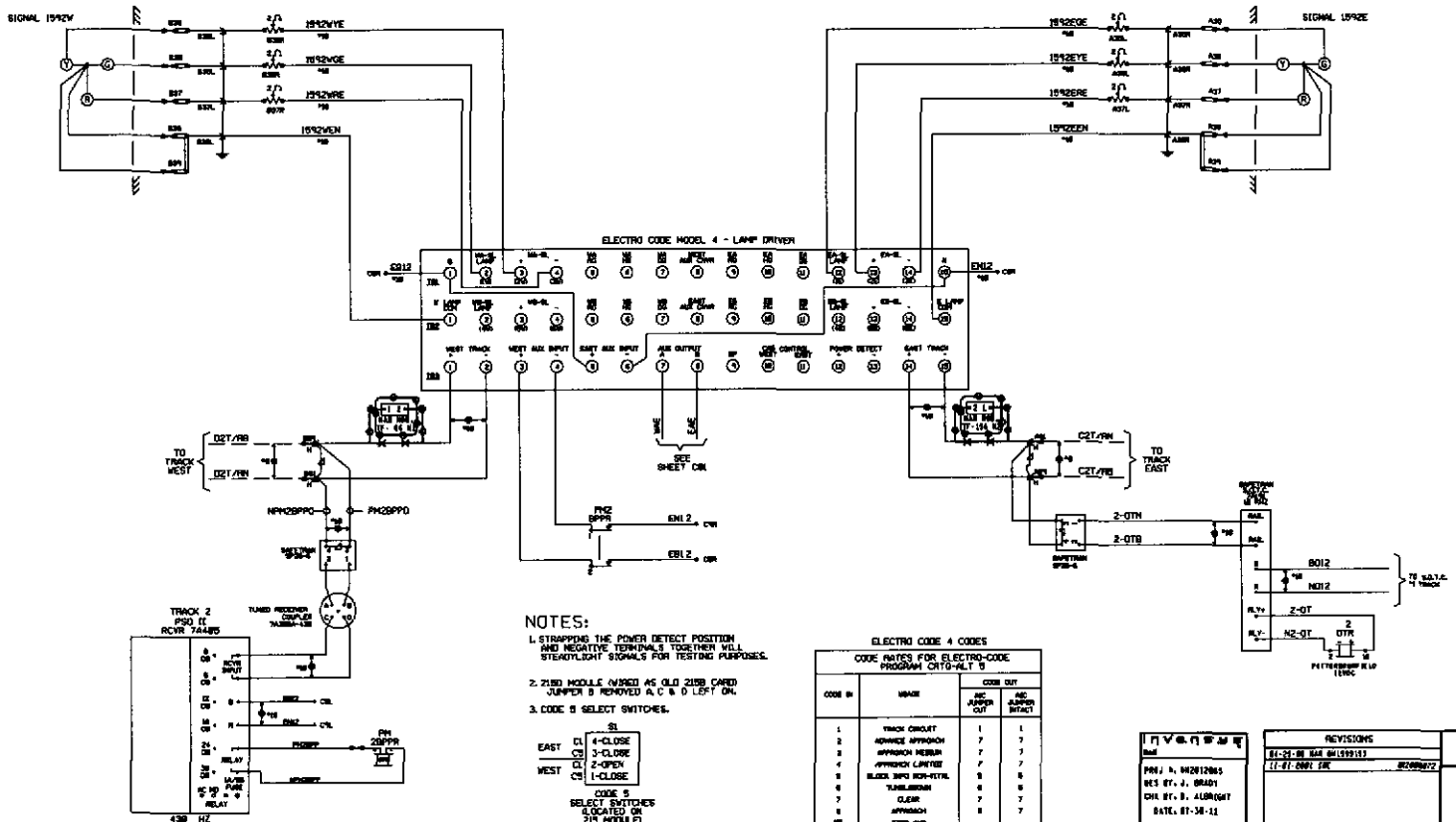
SIGNAL 1592W
SIGNAL 1592E
ELECTRO CODE MODEL 4 - LAMP DRIVER
TO TRACK WEST
TO TRACK EAST
SEE SHEET C06
TRACK 2 PSO II RCVR 7A485
NOTES:
1. STRAPPING THE POWER DETECT POSITION AND NEGATIVE TERMINALS TOGETHER WILL STEADYLIGHT SIGNALS FOR TESTING PURPOSES.
2. 2150 MODULE (USED AS OLD 2158 CARD JUMPER B REMOVED A, C & D LEFT ON.
3. CODE S SELECT SWITCHES.
S1
EAST C1 4-CLOSE
C2 3-CLOSE
WEST C1 2-OPEN
C2 1-CLOSE
CODE S SELECT SWITCHES (LOCATED ON 215 MODULE)
ELECTRO CODE 4 CODES
CODE RATES FOR ELECTRO-CODE PROGRAM CRTO-ALT 5
CODE IN | MEANS | CODE OUT NO JUMPER CUT | CODE OUT NO JUMPER INTACT
1 TRACK CIRCUIT 1 1
2 ADVANCE APPROACH 7 7
3 APPROACH MEDIUM 7 7
4 APPROACH LIMITED 7 7
5 BLOCK INFO NON-RETRL 5 5
6 TUNNELBORAN 6 6
7 CLEAR 7 7
8 APPROACH 8 7
NO CODE STOP AND PROCEED 1 & 6 1 & 6
= IN
= OUT
= NOTE
REVISIONS
RAIL TRANSPORT GROUP ENGINEERING COMMUNICATIONS AND SIGNALS
CRESTLINE TO CP-IU
PASCO, OHIO
ELECTRO CODE 4 TRACK & CIRCUITS
SIGNALS 1591 & 1592, MP. 01-191.40
REVISE TITLE BLOCK TO CURRENT STANDARD ON A.I.S.
DESIGNED LSTS
DIGITIZED KAR/CDW
CHECKED LSTS
DATE 05-25-94
DRAWING E606-5594
SHEET NO 5
NEXT SH 8
NEXT FILE 0118940
NEXT SH C02
FILE 0118940
SHEET C02

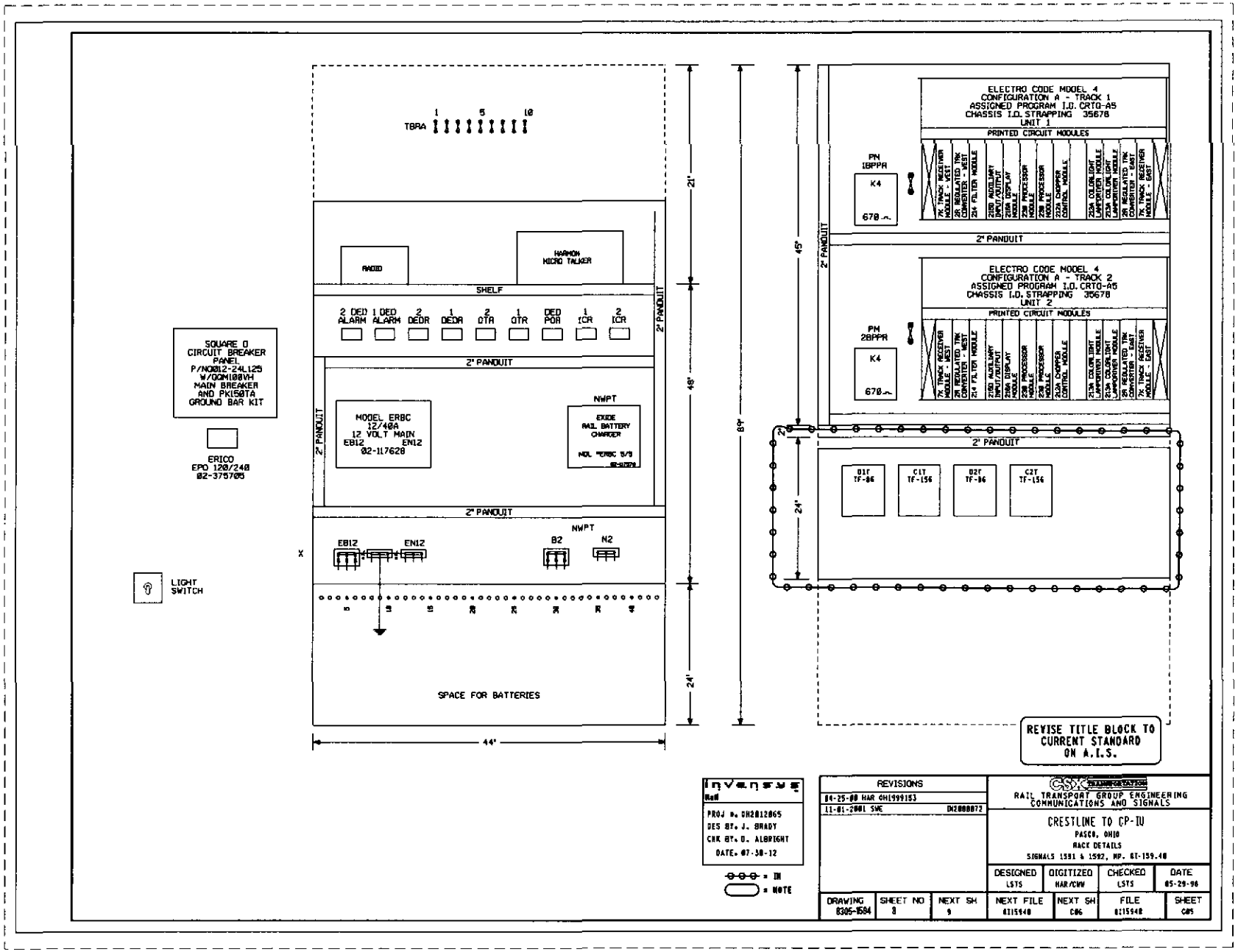

REVISIONS	
04-25-00 HAR OH1999153	
11-01-2001 SWC	D12000072

PROJ #. OH2012865
DES BY. J. BRADY
CHK BY. D. ALBRIGHT
DATE. 07-30-12

CSX TRANSPORTATION
RAIL TRANSPORT GROUP ENGINEERING
COMMUNICATIONS AND SIGNALS

CRESTLINE TO CP-IU
PASCO, OHIO
RACK DETAILS
SIGNALS 1591 & 1592, MP. BT-159.48

DESIGNED	DIGITIZED	CHECKED	DATE
LSTS	HAR/CMW	LSTS	05-29-98

DRAWING	SHEET NO	NEXT SH	NEXT FILE	NEXT SH	FILE	SHEET
8305-1594	8	9	0115948	C06	0115948	C05

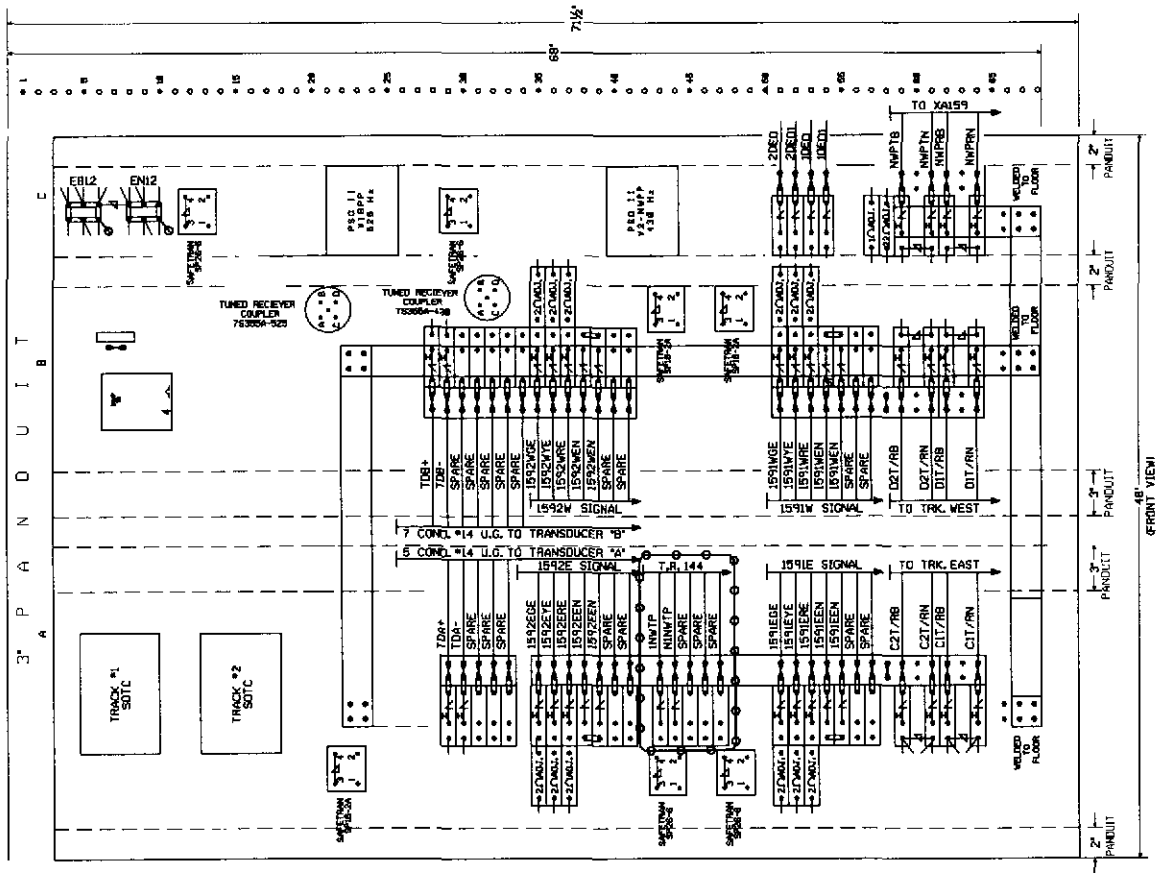

NOTES:

1. ADJ. 02-425799 - RESISTOR
2. Ω ADJ. 02-425807 - RESISTOR
3. Ω ADJ. 02-422754 - RESISTOR
4. 10 Ω FIXED 02-422586 - RESISTOR
5. 100 Ω FIXED 02-423646 - RESISTOR
6. 500 Ω FIXED 02-423711 - RESISTOR

02-037057 - 3 POST PORCELAIN BASE

02-058753 - TERMINAL BLOCK FOR EQUALIZER

02-048757 - TERMINAL STRIP

02-150009 - BUSS LINK

02-206602 - TEST LINK ASSEMBLY

02-026605 - ARRESTOR, HEAVY DUTY

02-025565 - ARRESTOR

02-197950 - EQUALIZER

GROUND CONNECTION TO BE IN ACCORDANCE WITH STANDARD PLAN CS-9001-A

REVISE TITLE BLOCK TO CURRENT STANDARD ON A.I.S.

Invensys Rail

PROJ #: 0N2812865
DES BY: J. BRADY
CHK BY: D. ALBRIGHT
DATE: 07-30-12

= IN
= NOTE

REVISIONS	
04-25-00 HAR	0N1999153
11-01-2001 SVC	0N2000012

CSX TRANSPORTATION
RAIL TRANSPORT GROUP ENGINEERING
COMMUNICATIONS AND SIGNALS

CRESTLINE TO CP-IU
PASCO, OHIO
TERMINAL BOARD ARRANGEMENT
SIGNALS 1591 & 1592, MP. 01-159.40

DESIGNED	DIGITIZED	CHECKED	DATE
LSTS	HAR/CWW	LSTS	05-29-98

DRAWING	SHEET NO	NEXT SH	NEXT FILE	NEXT SH	FILE	SHEET
8305-1594	9		011576B	001	011594B	C06

INDEX

SH. NO.	CONTENTS	REVISION NO. 1	2	3	4	5	6	7
1	TITLE, NOTES, INDEX AND REVISIONS	✓	✓					
2	LOCATION PLAN	✓	✓					
3	POWER DISTRIBUTION	✓	✓					
4	300002 SAFETRAN GRADE CROSSING PREDICTOR CIRCUITS	✓	✓					
5	GATE CONTROL, LIGHTING CIRCUITS AND CABLE TERMINATIONS	✓	✓					
6	GATE MECHANISM TYPICALS	✓	✓					
7	RELAY RACK AND CONNECTIONS - HOUSE LAYOUT	✓	✓					
8	RIGHT SIDE OF HOUSE	✓	✓					
9	LEFT SIDE OF HOUSE	✓	✓					
10	TERMINAL BOARD ARRANGEMENT	✓	✓					

NOTES

▭ = FOR MATERIAL REFERENCE SEE PLAN S-1002

⊗ = DENOTES TWISTED PAIR
GROUND IN ACCORDANCE WITH CS-9001-A

INVENTORY
Rail
PROJ #: OH2012065
DES BY: J. BRADY
CHK BY: D. ALBRIGHT
DATE: 07-30-12

= IN
= NOTE

REVISIONS

1 5-29-98 LSTS LSTS LSTS
NEW PLAN DRAWN ACCOUNT OF
WARNING DEVICES ADDED AT
PASCO-MONTRA ROAD (C.R. 16)

WO/AFE NO: 41541 PFC. NO. 2
IN SERVICE: 12-08-95
PER: JHB JFL CEO

2 LSTS LSTS LSTS
PLAN REVISED ACCOUNT OF
ELECTRO CODE 4 INSTALLED FROM
SIG. 1501/1502 TO SIG. 1701/1702,
SIGS. 1601/1602 ELIMINATED DUE TO
SIGNAL RESPACING.
SHEET #5 RETIRED
CSX PROJ. NO: OH1999153
CSX OP/AFE NO: 531
IN SERVICE: 02-17-99
PER: MLH
REVISED: 04-26-00 HAR CWW

3 07-30-12 JWB DBA DBA
PLAN REVISED ACCOUNT OF
INSTALLATION FLS & GATES
AT T.R. 144 (FERREE RD.)

CSX PROJ. NO: OH2012065
CSX OP/AFE NO: OH0898
IN SERVICE:
PER:
REVISED:

REVISE TITLE BLOCK TO
CURRENT STANDARD
ON A.I.S.

CSX TRANSPORTATION
RAIL TRANSPORT GROUP ENGINEERING
COMMUNICATIONS AND SIGNALS

CRESTLINE TO CP-IU
PASCO, OHIO
TITLE, NOTES, INDEX AND REVISIONS
PASCO-MONTRA ROAD (C.R. 16) 538 740U MP.01-16L.48

DESIGNED	DIGITIZED	CHECKED	DATE
LSTS	NAR/CWW	LSTS	07-14-95

DRAWING	SHEET NO	NEXT SH	NEXT FILE	NEXT SH	FILE	SHEET
8305-1604	1	2	016848	S01	016848	001

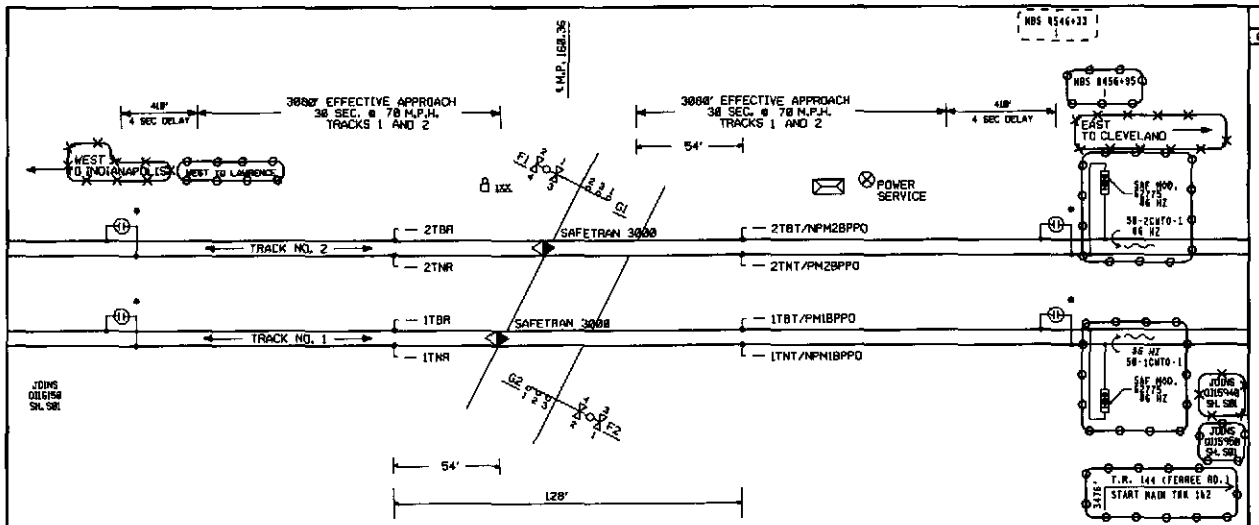

PASCO-MONTRA ROAD (C.R.16)

WARNING DEVICES TO BE INSTALLED IN
ACCORDANCE WITH THE M.U.T.C.D.

AAR/DOT# 538740U

NOTES:
SAFETRAN NBS 62775-156
EACH PAIR OF TRACK WIRES (TRANSMIT AND RECEIVE) SHOULD BE TWISTED AT LEAST TWO TURNS PER FOOT. THE TRANSMITTER PAIR SHOULD BE SEPARATED TO THE MAXIMUM EXTENT POSSIBLE FROM THE GCP RECEIVER PAIR BELOW GROUND AND IN INSTRUMENT HOUSING. TRANSMITTER WIRES MUST BE RUN TO THE NEAR SIDE OR BUNGALOW SIDE OF THE CROSSING.

Invensys Rail
PROJ #: GH2012865
DES BY: J. BRADY
CHK BY: D. ALBRIGHT
DATE: 07-30-12

= IN
= OUT
= NOTE
= EXISTING

DRAWING	SHEET NO	NEXT SH
8305-1604	2	3

REVISIONS
04-25-00 HAR GH1999853

REVISE TITLE BLOCK TO CURRENT STANDARD ON A.I.S.

CSX TRANSPORTATION
RAIL TRANSPORT GROUP ENGINEERING
COMMUNICATIONS AND SIGNALS

CRESTLINE TO CP-IU
PASCO, OHIO
LOCATION PLAN
PASCO-MONTRA ROAD (C.R. 16) 538 740U MP.01-168.48

DESIGNED	DIGITIZED	CHECKED	DATE
LSTS	HAR/CWW	LSTS	07-14-95

NEXT FILE	NEXT SH	FILE	SHEET
0116048	E01	0116048	S01