FILE

21

WHEELING & LAKE ERIE RAILWAY COMPANY

Dan Reinsel
Signal & Communication Supervisor

100 East First Street
Brewster, OH 44613

Tel. 330-767-7202 **dreinsel@wlerwy.com** **Fax: 330-767-3213**

11 May 2010

Ohio Rail Development Commission
Mr. Joe Reinhardt
1980 West Broad Street, Room 2B
Columbus, OH 43223

10-44-RR-FED

Re: Estimate for Railroad Crossing Warning System at New State Rd. DOT 001-983K

Dear Mr. Reinhardt,

As a result of a competitive bid for the crossing package and use of our continuing construction agreement with CTC LLC the following is my prepared estimate.

CTC Managed Services & Package Installation	$34,308.01
RSS Supplied Package	$95,000.00
Fill Materials	$1,500.00
Fill Material Transport	$1,100.00
Two Gate Foundations (note 1)	$918.00
Site Preparation (foundations, bores)	$15,000.00
Electric Service	$3,500.00
WLE Cutover & Flagging Labor	$3,000.00
Estimated Total	$154,326.01

Please contact me if additional details are required.

Respectfully,

Dan Reinsel

Dan Reinsel

Notes
1: Direct purchase from Fabricated Metals, 60' galvanized gate foundation, $459 ea.

c: PUCO, Jill Henry
PUCO, George Martin

RECEIVED-DOCKETING DIV
2010 MAY 13 PM 12: 19
PUCO

This is to certify that the images appearing are an accurate and complete reproduction of a case file document delivered in the regular course of business
Technician _____ Date Processed MAY 13 2010

Wheeling & Lake Erie Railway Co.
New State Road - Project Estimate
CTC Project No. CT10024

ENGINEERING

Line No.	Description	Qty	UOM	Cost	Total Cost
1	CAD OPERATOR	24	HR	28.38	$681.12
2	SIGNAL CHECKER, LEVEL 1	16	HR	28.38	$454.08
3	SIGNAL CHECKER, LEVEL 2/FIELD ENGINEER	4	HR	36.06	$144.24
	SUBTOTAL				$1,279.44
	G&A BURDEN FOR LABOR				$2,341.38
	FIXED FEE				$362.08
	ENGINEERING TOTAL				**$3,982.90**

PROJECT MANAGEMENT

Line No.	Description	Qty	UOM	Cost	Total Cost
1	SENIOR SIGNAL ENGINEER	24	HR	72.11	$1,730.64
2	PROJECT MANAGER	8	HR	60.10	$480.80
3	CONSTRUCTION MANAGER	24	HR	36.06	$865.44
4	ACCOUNTING, LEVEL1	4	HR	38.47	$153.88
5	ADMINISTRATIVE	4	HR	25.48	$101.92
	SUBTOTAL				$3,332.68
	G&A BURDEN FOR LABOR				$6,098.80
	FIXED FEE				$943.15
	PROJECT MANAGEMENT TOTAL				**$10,374.63**

CONSTRUCTION

Line No.	Description	Qty	UOM	Cost	Total Cost
	LABOR				
1	SIGNAL GANG, FOREMAN	60	HR	28.50	$1,710.00
2	SIGNAL GANG, SIGNALMAN	60	HR	19.50	$1,170.00
3	SIGNAL GANG, SIGNALMAN HELPER	60	HR	19.00	$1,140.00
4	SIGNAL SUPERVISOR	8	HR	36.06	$288.48
	Expenses				
5	EMPLOYEE MEALS (PER DIEM)	26	EA	35.00	$910.00
6	EMPLOYEE TRAVEL & LODGING	24	EA	55.00	$1,320.00
7	AIRFARE	4	EA	500.00	$2,000.00
	Equipment				
7	TRUCK, PU, 1 TON CREW CAB	60	HR	6.50	$390.00
8	TRUCK, BOOM, ART, TELESCOPING	4	HR	55.95	$223.80
9	BACKHOE, 2WD, 95 HP	4	DY	250.00	$1,000.00
10	EQUIPMENT DELIVERY/PICKUP	2	LS	50.00	$100.00
	SUBTOTAL-LABOR				$4,308.48
	SUBTOTAL-EXPENSES/EQUIPMENT				$5,943.80
	G&A BURDEN FOR LABOR				$7,884.52
	FIXED FEE				$1,813.68
	CONSTRUCTION TOTAL				**$19,950.48**

MATERIALS

Line No.	Description	Qty	UOM	Cost	Total Cost
1	MATERIAL PACKAGE	1	LOT	95,000.00	$95,000.00
	MATERIAL TOTAL				**$95,000.00**

TOTAL PROJECT COST (CTC)	***$129,308.01***

DWG. NO.	DESCRIPTION
00	INDEX
01	SITE LAYOUT
02	CROSSING CONTROL CIRCUITS
03	HXP PROGRAM INFORMATION
04	RECORDER
05	BGD
06	SSCC III
07	1LSP
08	CTP
09	GATE #1 MECHANISM (NEAR SIDE)
10	GATE #1 LIGHTS (NEAR SIDE)
11	GATE #2 MECHANISM (FAR SIDE)
12	GATE #2 LIGHTS (FAR SIDE)
13	BATTERY CHARGER
14	AC POWER DISTRIBUTION
15	RACK FRONT VIEW
16	RACK BACK VIEW
17	SIDE "A"
18	SIDE "C"

REV.	GENERAL NOTES

THE OPERATION OF THE CIRCUITS AND EQUIPMENT REPRESENTED HEREIN CANNOT BE FULLY CHECKED UNTIL ALL CIRCUITS AND DEVICES ARE CONNECTED TO FORM A COMPLETE SYSTEM, OR AN EFFECTIVE SUBSYSTEM. SUCH SYSTEM OR SUBSYSTEM MUST BE GIVEN COMPLETE CIRCUIT AND OPERATIONAL TESTS BEFORE BEING PLACED IN REGULAR OPERATION.

REVISION BLOCK

W&LE

Wheeling & Lake Erie Railway

LOCATION: NEW STATE ROAD, CR 150
RIPLEY TWP, HURON COUNTY, OH.

ORIGINAL DATE	04/14/2010	TITLE	INDEX		
DESIGNER	CTC	SUB	CAREY	CTC NO.	CT10024
DRAFTSMAN	CTC	MILEP	N - 98.7	SCALE	N.T.S.
CHECKED	CTC	DOT NO.	001-983-K	SHEET	00 of 18

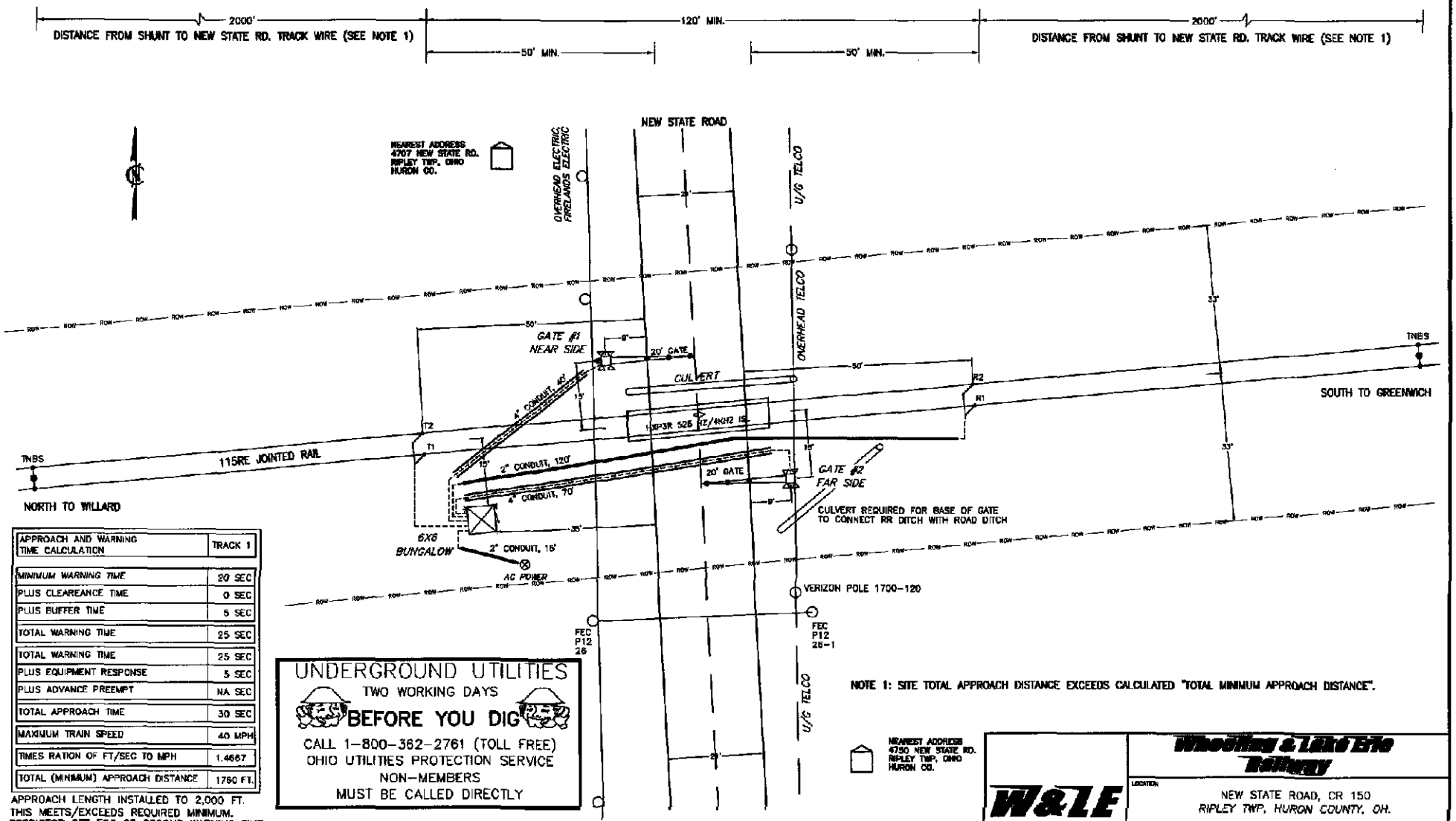

APPROACH AND WARNING TIME CALCULATION	TRACK 1
MINIMUM WARNING TIME	20 SEC
PLUS CLEAREANCE TIME	0 SEC
PLUS BUFFER TIME	5 SEC
TOTAL WARNING TIME	25 SEC
TOTAL WARNING TIME	25 SEC
PLUS EQUIPMENT RESPONSE	5 SEC
PLUS ADVANCE PREEMPT	NA SEC
TOTAL APPROACH TIME	30 SEC
MAXIMUM TRAIN SPEED	40 MPH
TIMES RATION OF FT/SEC TO MPH	1.4667
TOTAL (MINIMUM) APPROACH DISTANCE	1760 FT.

APPROACH LENGTH INSTALLED TO 2,000 FT.
THIS MEETS/EXCEEDS REQUIRED MINIMUM.
PREDICTOR SET FOR 25 SECOND WARNING TIME.

UNDERGROUND UTILITIES
TWO WORKING DAYS
BEFORE YOU DIG
CALL 1-800-362-2761 (TOLL FREE)
OHIO UTILITIES PROTECTION SERVICE
NON-MEMBERS
MUST BE CALLED DIRECTLY

NOTE 1: SITE TOTAL APPROACH DISTANCE EXCEEDS CALCULATED "TOTAL MINIMUM APPROACH DISTANCE".

W&LE

Wheeling & Lake Erie Railway

LOCATION: NEW STATE ROAD, CR 150
RIPLEY TWP, HURON COUNTY, OH.

ORIGINAL DATE 06/14/2010	TITLE LAYOUT		
DESIGNER CTC	SUB CAREY	CTC NO. CT10024	
DRAFTSMAN CTC	MILEP N - 95.7	SCALE N.T.S.	
CHECKER CTC	DOT NO. 001-983-K	SHEET 01 OF 18	

REVISION BLOCK

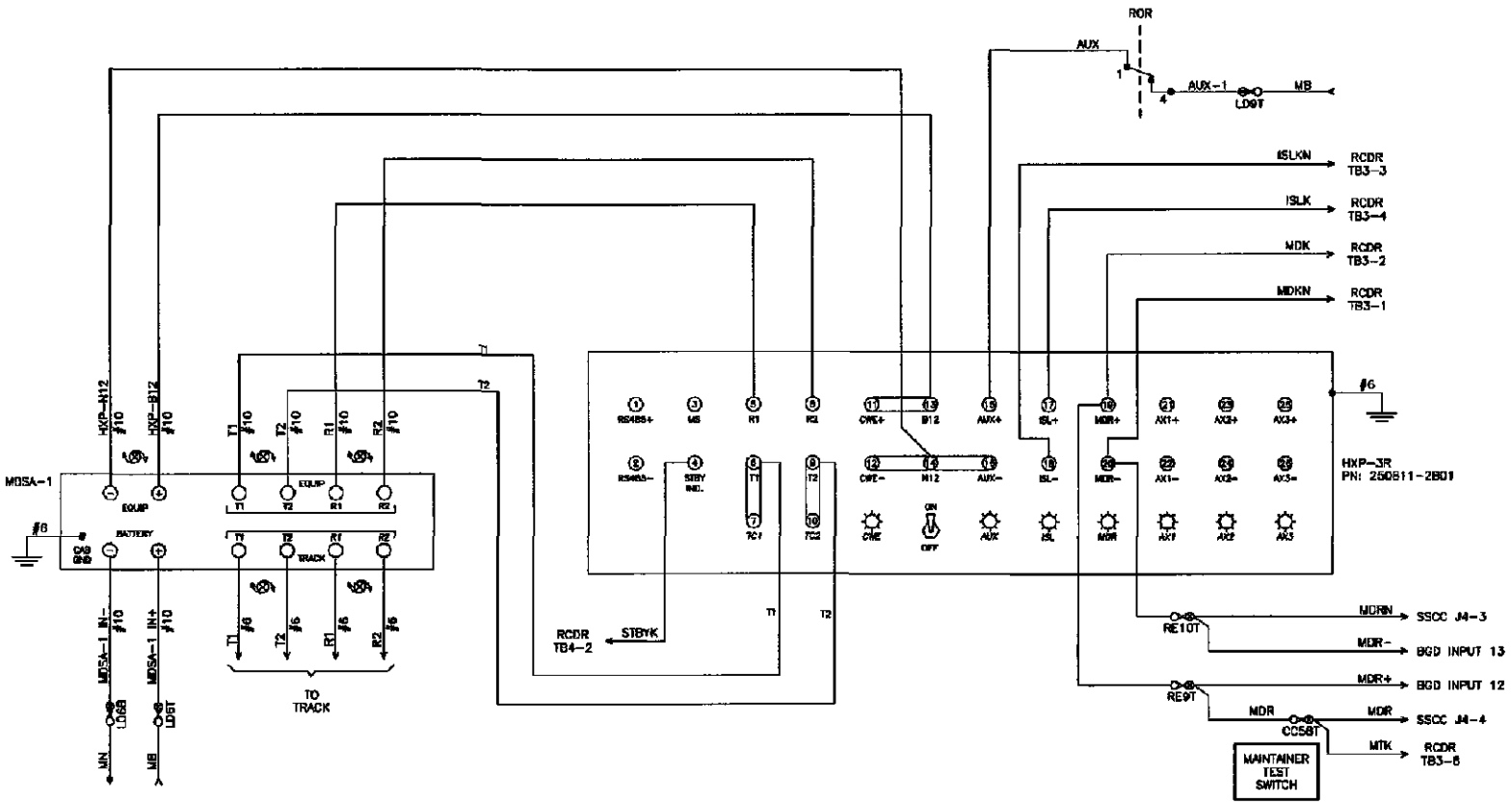

Wheeling & Lake Erie Railway

W&LE

LOCATION
NEW STATE ROAD, CR 150
RIPLEY TWP, HURON COUNTY, OH.

ORIGINAL DATE 04/14/2010	TITLE CROSSING CONTROL CIRCUITS		
DESIGNER CTC	BUR CAREY	CTC NO. CTI0024	
DRAFTSMAN CTC	MAP N - 98.7	SCALE N.T.S.	
CHECKER CTC	DOT NO. D01-983-K	SHEET 02 of 18	

REVISION BLOCK

PROGRAM
INFORMATION

* = FIELD ADJUSTMENT TO BE MADE ACCORDING TO THE HXP-3 INSTRUCTION MANUAL.

HXP-3R ADJUSTMENTS

NO.	ADJUSTMENT NAME	TRACK 1	TRACK 2
1	APP. LENGTH	2000'	
2	WARNING TIME	30 SEC	
3	LIA	*	
4	TC	*	
5	MD RESTART	0	

OPTION ADJUSTMENTS

NO.	ABBREVIATION	TRACK 1	TRACK 2
1	TK-ENA	UP	
2	TK FO	525 HZ	
3	CW/MD	C	
4	UNI-BI	b (Bi)	
5	NBS-C	*	
6	CWEWT	DL (80 SEC.)	
7	LOS	DL (16 SEC.)	
8	IJ-LOS	DL (5 SEC.)	
9	BC	133 *	
10	P-COMP	*	
11	AX1	N/A	
12	AX2	N/A	
13	AX3	N/A	
17	MDR-AX	"dn"	
	OF-TK 1 OR 2	DL (0)	
	CJ-LOS	DL (0)	
	PJ-DET	DL (15)	
	PJ-RX	DL (15)	
18	MD-TMR	DL (10)	
19	MIN-WT	DL (0)	
20	FS-DET	"dn"	
	FS-RX	DL (0)	
	FS-TM	DL (10)	
21	POS-ST	"dn"	
	POS-RX	DL (0)	
	POS-TM	DL (0)	
22	AR-TMR	"dn"	
	AR-RX	DL (0)	
	AR-TM	DL (10)	
47	ATO-RX	UP	
48	PF-ENA	"dn"	

AX ADJUSTMENTS

NO.	ABBREVIATION	AX 1	AX 2	AX 3
1	TK-ASN			
2	OF-TK1			
3	OF-TK2			
4	WT			
5	MD-RST			
6	CW/MD			
7	CJ-LOS			
8	PJ-DET			
9	PJ-RX			
10	POS-ST			

SWITCH INFORMATION

SWITCH	TRACK 1	TRACK 2
MASTER/SLAVE	MASTER	
RSI FAULT JUMPER	0	
RSI-LOS JUMPER	1	
TLM W1 JUMPER	PINS 1-2	
TLM W2 JUMPER	PINS 1-2	
TLM W3 JUMPER	PINS 2-3	
MINUTE TIMEOUT	5 MIN	
CW/MD	CW	
STANDBY/AUTO/NORMAL	AUTO	

NOTE: DL= DEFAULT LEVEL
NA= NON APPLICABLE

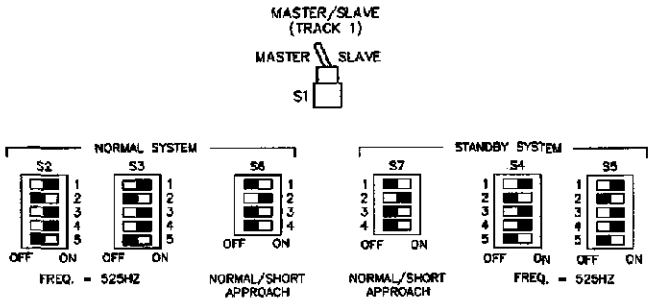

NOTES FOR S6 AND S7:

1) ACTUATOR 1 SELECTS NORMAL APPROACH WHEN SET TO ON POSITION.

2) WITH ACTUATOR 1 IN OFF POSITION ACTUATOR 2 SELECTS SHORT APPROACH WHEN OFF AND SELECTS VERY SHORT WHEN ON.

3) ACTUATOR 3 AND 4 RESERVED FOR FUTURE USE.

REVISION BLOCK

W&LE

Wheeling & Lake Erie Railway

LOCATION
NEW STATE ROAD, CR 150
RIPLEY TWP, HURON COUNTY, OH.

ORIGINAL DATE 09/24/2008	TITLE HXP PROGRAM INFORMATION		
DESIGNER CTC	BY CAREY	CTC NO. CT10024	
DRAFTSMAN CTC	MAP N - 98.7	SCALE N.T.S.	
CHECKER CTC	DOT NO. 001-983-K	SHEET 03 OF 18	

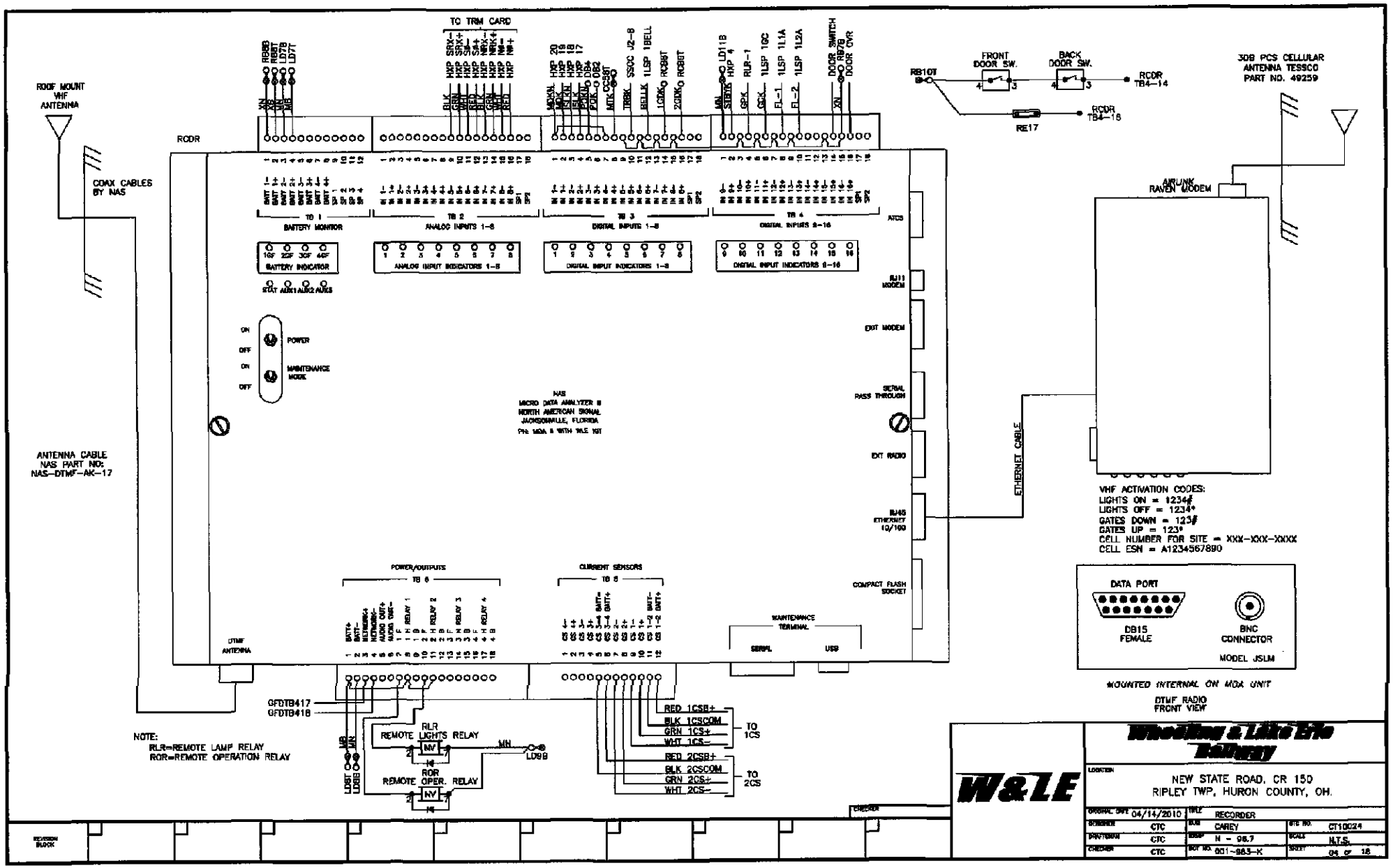
ROOF MOUNT VHF ANTENNA
COAX CABLES BY NAS
ANTENNA CABLE NAS PART NO: NAS-DTMF-AK-17
RCDR
TO TRM CARD
TB 1 BATTERY MONITOR
TB 2 ANALOG INPUTS 1-8
TB 3 DIGITAL INPUTS 1-8
TB 4 DIGITAL INPUTS 9-16
BATTERY INDICATOR
ANALOG INPUT INDICATORS 1-8
DIGITAL INPUT INDICATORS 1-8
DIGITAL INPUT INDICATORS 9-16
STAT AUX1 AUX2 AUX3
POWER
MAINTENANCE MODE
NAS
MICRO DATA ANALYZER II
NORTH AMERICAN SIGNAL
JACKSONVILLE, FLORIDA
ATCS
RJ11 MODEM
EXT MODEM
SERIAL PASS THROUGH
EXT RADIO
RJ45 ETHERNET 10/100
COMPACT FLASH SOCKET
ETHERNET CABLE
POWER/OUTPUTS TB 6
CURRENT SENSORS TB 5
MAINTENANCE TERMINAL
SERIAL
USB
DTMF ANTENNA
GFDTB417
GFDTB418
NOTE:
RLR=REMOTE LAMP RELAY
ROR=REMOTE OPERATION RELAY
REMOTE LIGHTS RELAY
REMOTE OPER. RELAY
MH
LD99
RED 1CSB+
BLK 1CSCOM
GRN 1CS+
WHT 1CS-
TO 1CS
RED 2CSB+
BLK 2CSCOM
GRN 2CS+
WHT 2CS-
TO 2CS
FRONT DOOR SW.
BACK DOOR SW.
RB10T
RCDR TB4-14
RCDR TB4-16
RE17
3G8 PCS CELLULAR ANTENNA TESSCO PART NO. 49259
AIRLINK RAVEN MODEM
VHF ACTIVATION CODES:
LIGHTS ON = 1234#
LIGHTS OFF = 1234*
GATES DOWN = 123#
GATES UP = 123*
CELL NUMBER FOR SITE = XXX-XXX-XXXX
CELL ESN = A1234567890
DATA PORT
DB15 FEMALE
BNC CONNECTOR
MODEL JSLM
MOUNTED INTERNAL ON MOX UNIT
DTMF RADIO FRONT VIEW
W&LE
Wheeling & Lake Erie Railway
LOCATION
NEW STATE ROAD, CR 150
RIPLEY TWP, HURON COUNTY, OH.
ORIGINAL DATE 04/14/2010
TITLE RECORDER
DESIGNER CTC
DRAFTSMAN CTC
CHECKER CTC
SUB CAREY
GROUP N - 96.7
DOT NO. 001-983-K
SITE NO. CT10024
SCALE N.T.S.
SHEET 04 OF 18
REVISION BLOCK
CHECKER

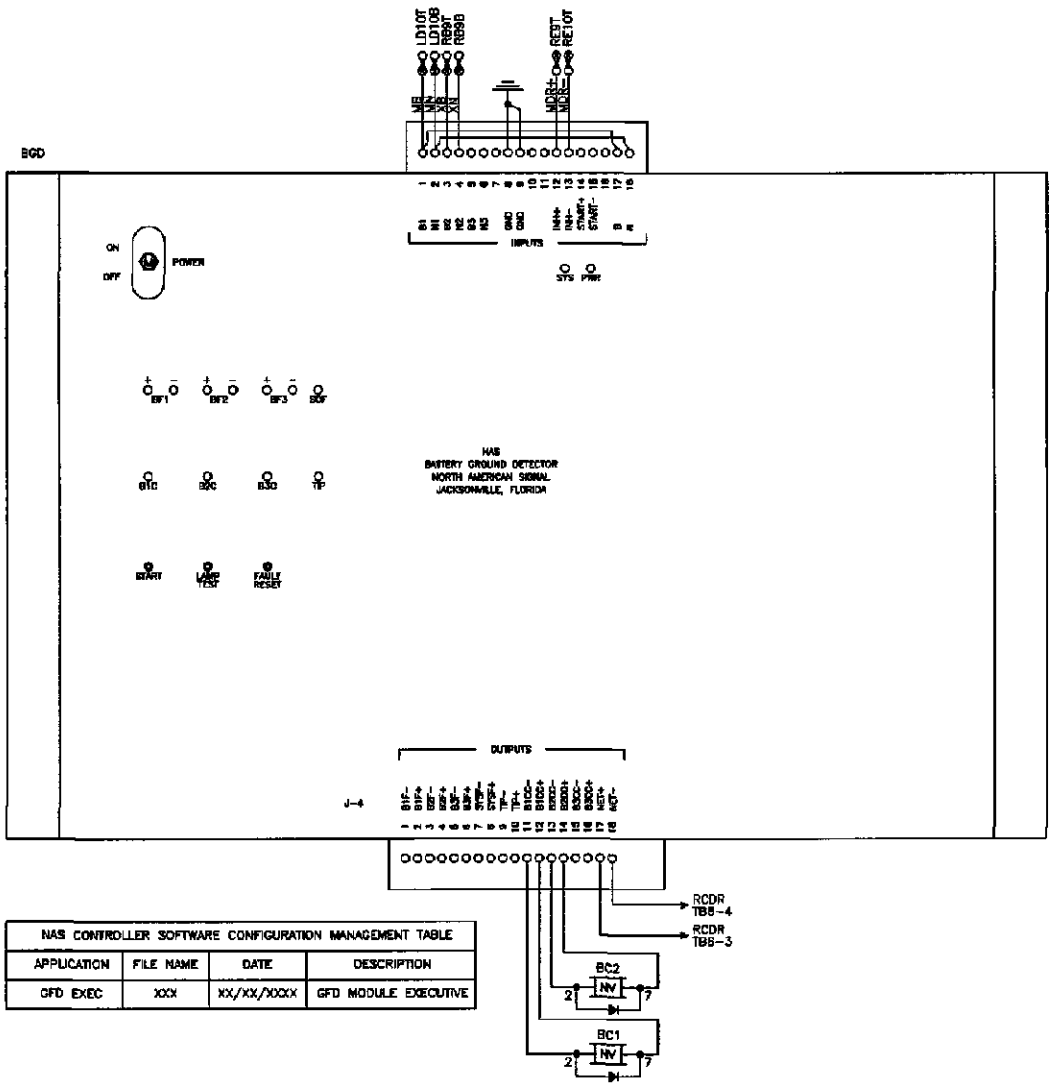

NAS CONTROLLER SOFTWARE CONFIGURATION MANAGEMENT TABLE			
APPLICATION	FILE NAME	DATE	DESCRIPTION
GFD EXEC	XXX	XX/XX/XXXX	GFD MODULE EXECUTIVE

SW1 CURRENT 1/10 MA

POSITION	1	2	3	4	5	6	7	8
CLOSED			■		■			
OPEN								

(2 MA)

SWITCH VALUES CLOSED POSITION (BINARY)

SW1 = 1
SW2 = 2
SW3 = 4
SW4 = 8
SW5 = 16
SW6 = 32
SW7 = 64
SW8 = 128

SW1 CURRENT 1/10 MA

POSITION	1	2	3	4	5	6	7	8
CLOSED			■	■				
OPEN								■

DAYS
HOURS

(12 HOURS)

SWITCH VALUES CLOSED POSITION (BINARY)

SW1 = 1
SW2 = 2
SW3 = 4
SW4 = 8
SW5 = 16
SW6 = 32
SW7 = 64
SW8 OPEN=HOUR CLOSED=DAYS

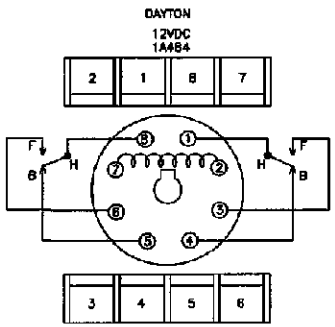

BC1, BC2, IROR, RLR

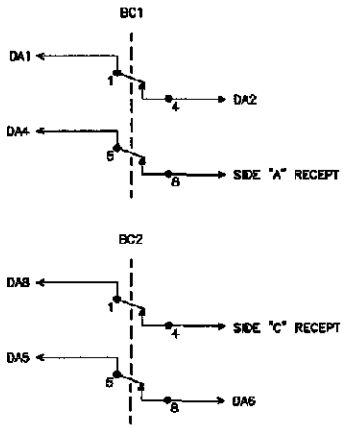

W&LE

Wheeling & Lake Erie Railway

LOCATION
NEW STATE ROAD, CR 150
RIPLEY TWP, HURON COUNTY, OH.

ORIGINAL DATE	04/14/2010	TITLE	BGD		
DESIGNER	CTC	SUB	CAREY	DWG NO.	CT10024
DRAFTSMAN	CTC	ROUTE	N ~ 98.7	SCALE	N.T.S.
CHECKED	CTC	BOT NO.	001-983-K	SHEET	05 OF 18

REVISION BLOCK

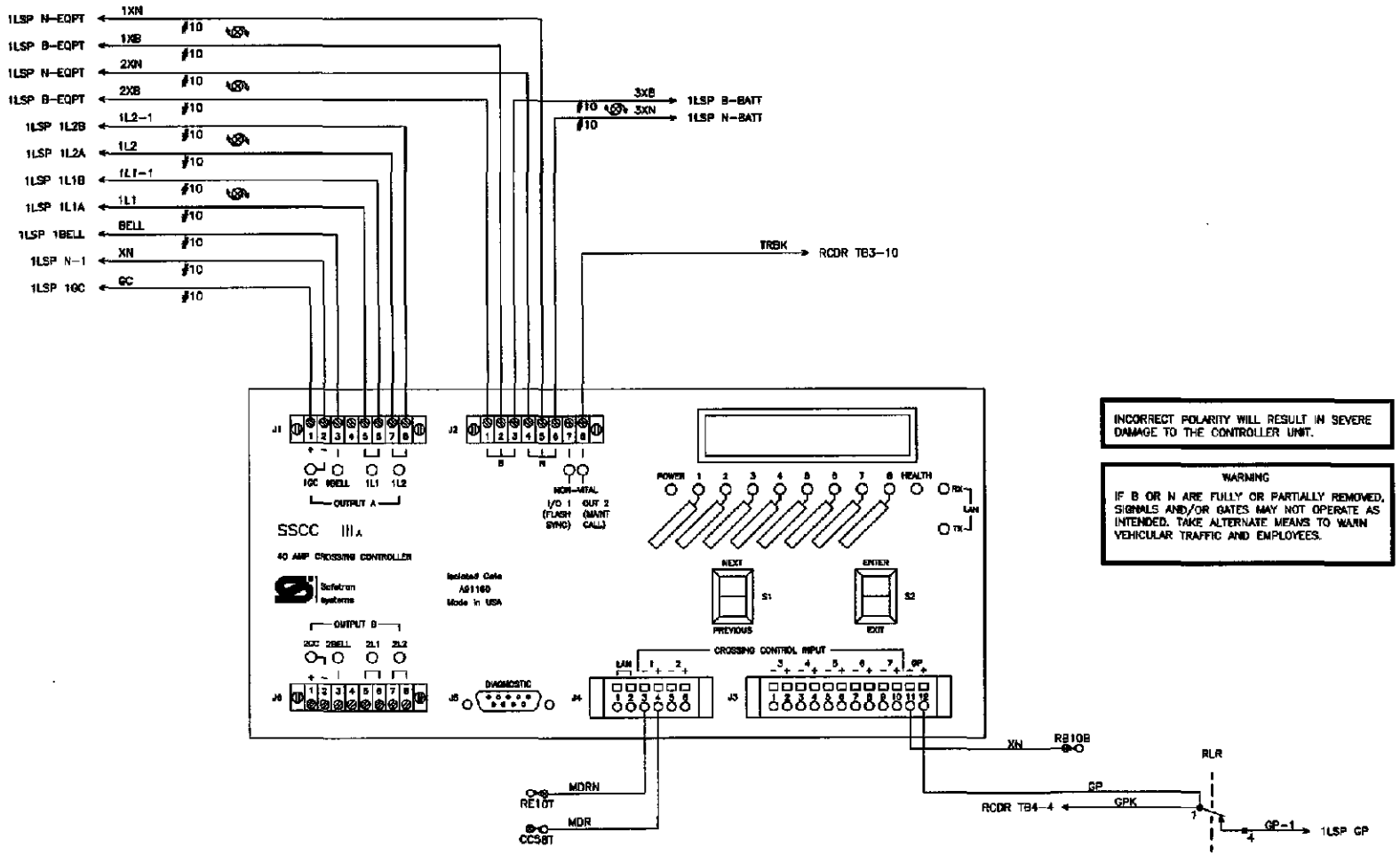

INCORRECT POLARITY WILL RESULT IN SEVERE DAMAGE TO THE CONTROLLER UNIT.

WARNING

IF B OR N ARE FULLY OR PARTIALLY REMOVED, SIGNALS AND/OR GATES MAY NOT OPERATE AS INTENDED. TAKE ALTERNATE MEANS TO WARN VEHICULAR TRAFFIC AND EMPLOYEES.

W&LE

Wheeling & Lake Erie Railway

LOCATION: NEW STATE ROAD, CR 150
RIPLEY TWP, HURON COUNTY, OH.

ORIGINAL DATE 04/14/2010	TITLE SSCC III		
DESIGNER CTC	SUB CAREY	DWG NO. CT10024	
DRAFTSMAN CTC	MILE N - 96.7	SCALE N.T.S.	
CHECKER CTC	DOT NO. 001-983-K	SHEET 06 OF 16	

REVISION BLOCK

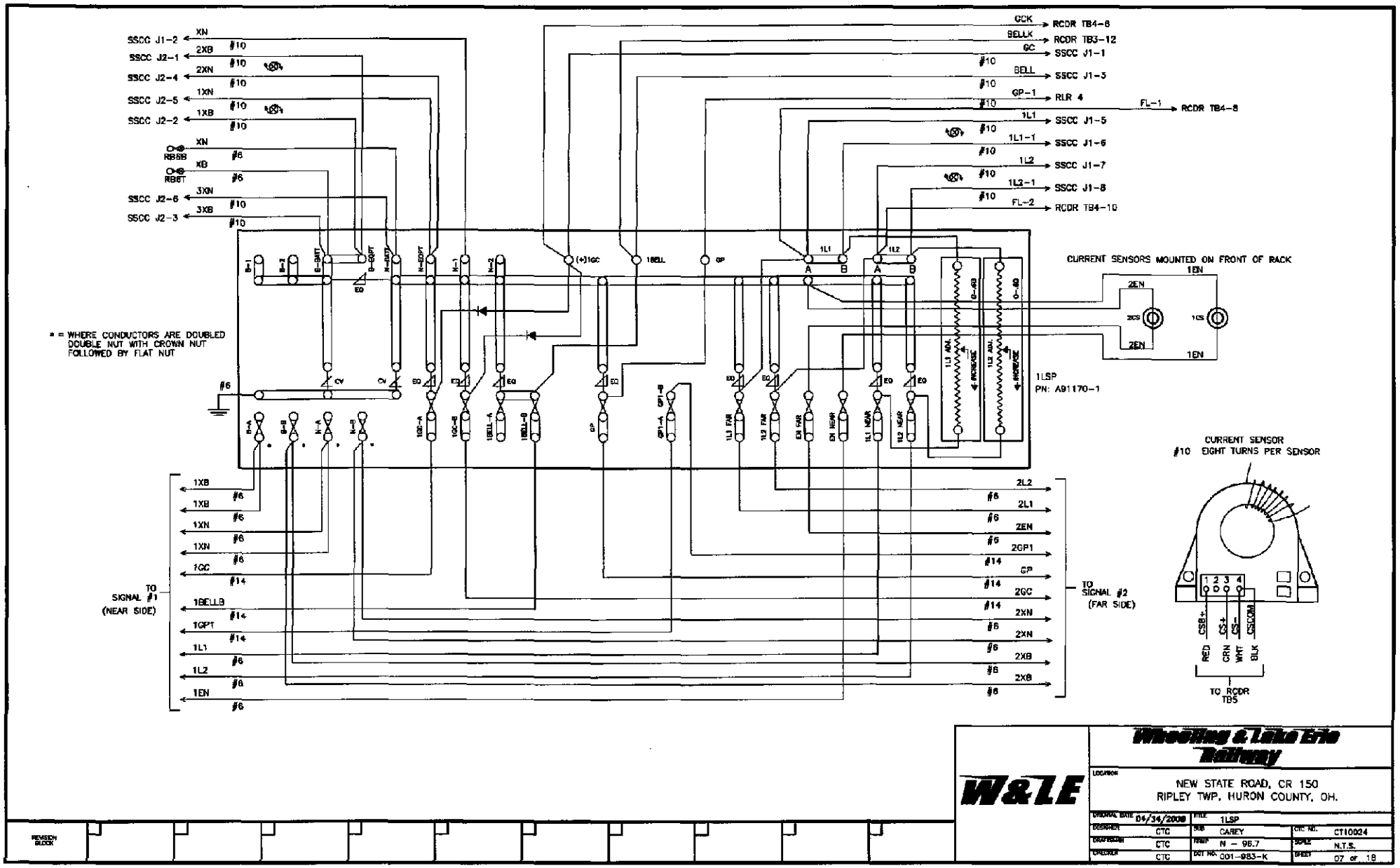

REVISION BLOCK

W&LE

Wheeling & Lake Erie Railway

LOCATION: NEW STATE ROAD, CR 150
RIPLEY TWP, HURON COUNTY, OH.

ORIGINAL DATE 04/24/2008	TITLE 1LSP		
DESIGNER CTC	SUB CAREY	CTC NO. CT10024	
DRAFTSMAN CTC	RMP N - 98.7	SCALE N.T.S.	
CHECKED CTC	DOT NO. 001-983-K	SHEET 07 of 18	

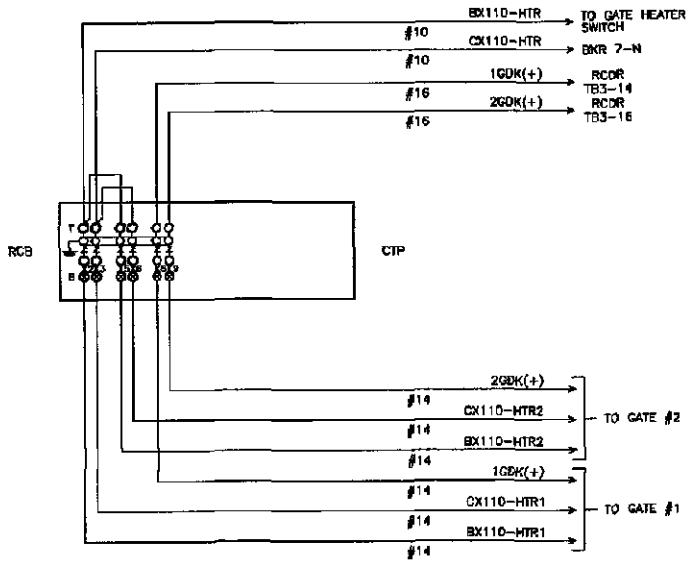

W&LE

Wheeling & Lake Erie Railway

LOCATION: NEW STATE ROAD, CR 150
RIPLEY TWP, HURON COUNTY, OH.

ORIGINAL DATE	04/14/2010	TITLE	CTP		
DESIGNER	CTC	SUB	CAREY	CTC NO.	CT10024
DRAFTSMAN	CTC	MILEP	N - 96.7	SCALE	N.T.S.
CHECKER	CTC	DOF NO.	001-983-K	SHEET	05 of 18

REVISION BLOCK

SAFETRAN MODEL S-40
GATE MECHANISM

CONTACT	CLOSED	FUNCTION
6	45°-90°	POWER DOWN
7	0°-88°	POWER UP
8	83°-90°	FLASHING LIGHT
9	5°-90°	BELL (NOT USED)
10	0°-5°	HORIZONTAL SNUB
11	0°-5°	GATE DOWN INDICATION

WITH GATE IN UP POSITION

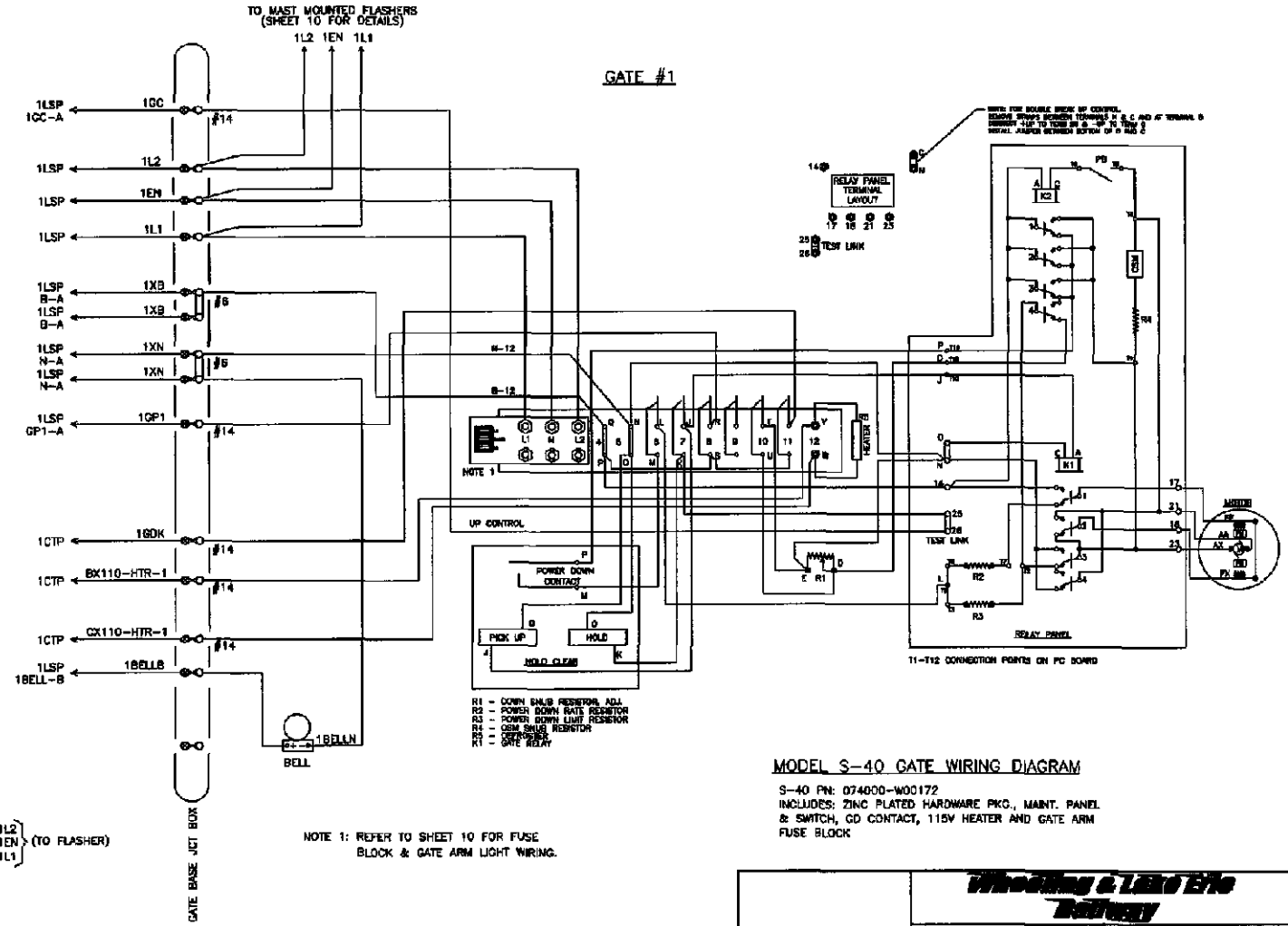

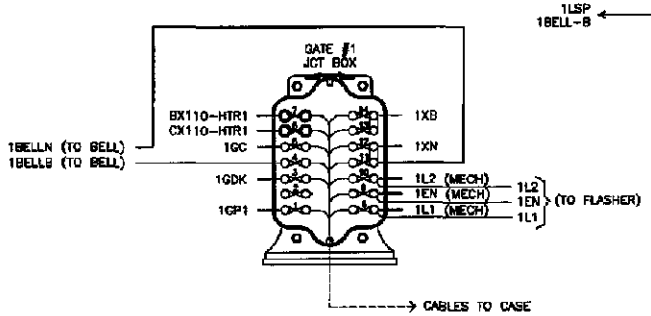

NOTE 1: REFER TO SHEET 10 FOR FUSE BLOCK & GATE ARM LIGHT WIRING.

MODEL S-40 GATE WIRING DIAGRAM

S-40 PN: 074000-W00172
INCLUDES: ZINC PLATED HARDWARE PKG., MAINT. PANEL & SWITCH, GD CONTACT, 115V HEATER AND GATE ARM FUSE BLOCK

W&LE

Wheeling & Lake Erie Railway

LOCATION: NEW STATE ROAD, CR 150
RIPLEY TWP, HURON COUNTY, OH.

ORIGINAL DATE 04/14/2010	TITLE GATE #1 MECHANISM (NEAR SIDE)		
DESIGNER CTC	SUB CAREY	DWG NO. CT10024	
DRAFTSMAN CTC	MILEP N - 96.7	SCALE N.T.S.	
CHECKER CTC	DOT NO. 001-893-K	SHEET 09 OF 18	

REVISION BLOCK

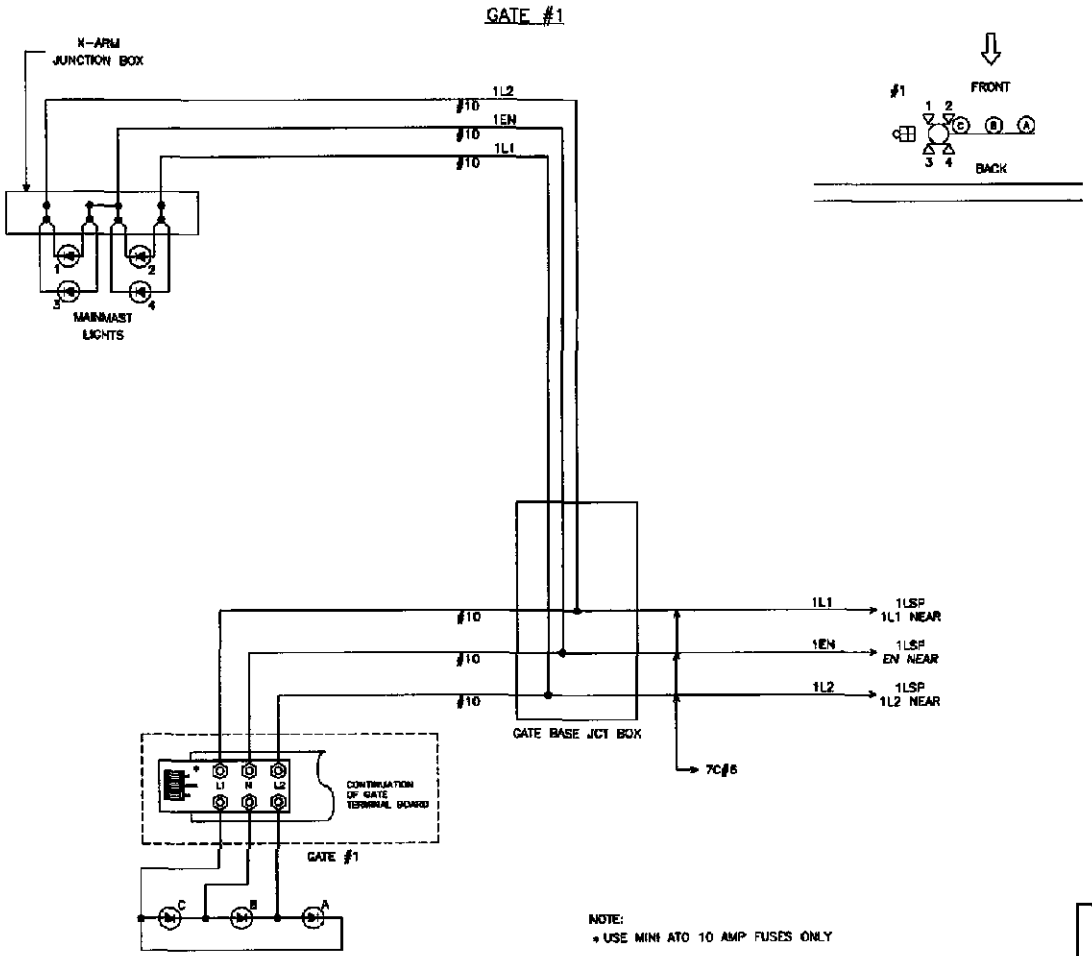

NOTE:
* USE MINI ATO 10 AMP FUSES ONLY

W&LE

Wheeling & Lake Erie Railway

LOCATION: NEW STATE ROAD, CR 150
RIPLEY TWP, HURON COUNTY, OH.

ORIGINAL DATE 04/14/2010	TITLE GATE #1 LIGHTS (NEAR SIDE)		
DESIGNER CTC	SUB CAREY	CTC NO. CT10024	
DRAFTSMAN CTC	RR/MP N - 95.7	SCALE N.T.S.	
CHECKED CTC	DOT NO. 001-883-K	SHEET 10 OF 18	

REVISION BLOCK

SAFETRAN MODEL S-40
GATE MECHANISM

CONTACT	CLOSED	FUNCTION
6	45°-90°	POWER DOWN
7	0°-89°	POWER UP
8	83°-90°	FLASHING LIGHT
9	5°-90°	BELL (NOT USED)
10	0°-5°	HORIZONTAL SNUB
11	0°-5°	GATE DOWN INDICATION

WITH GATE IN UP POSITION

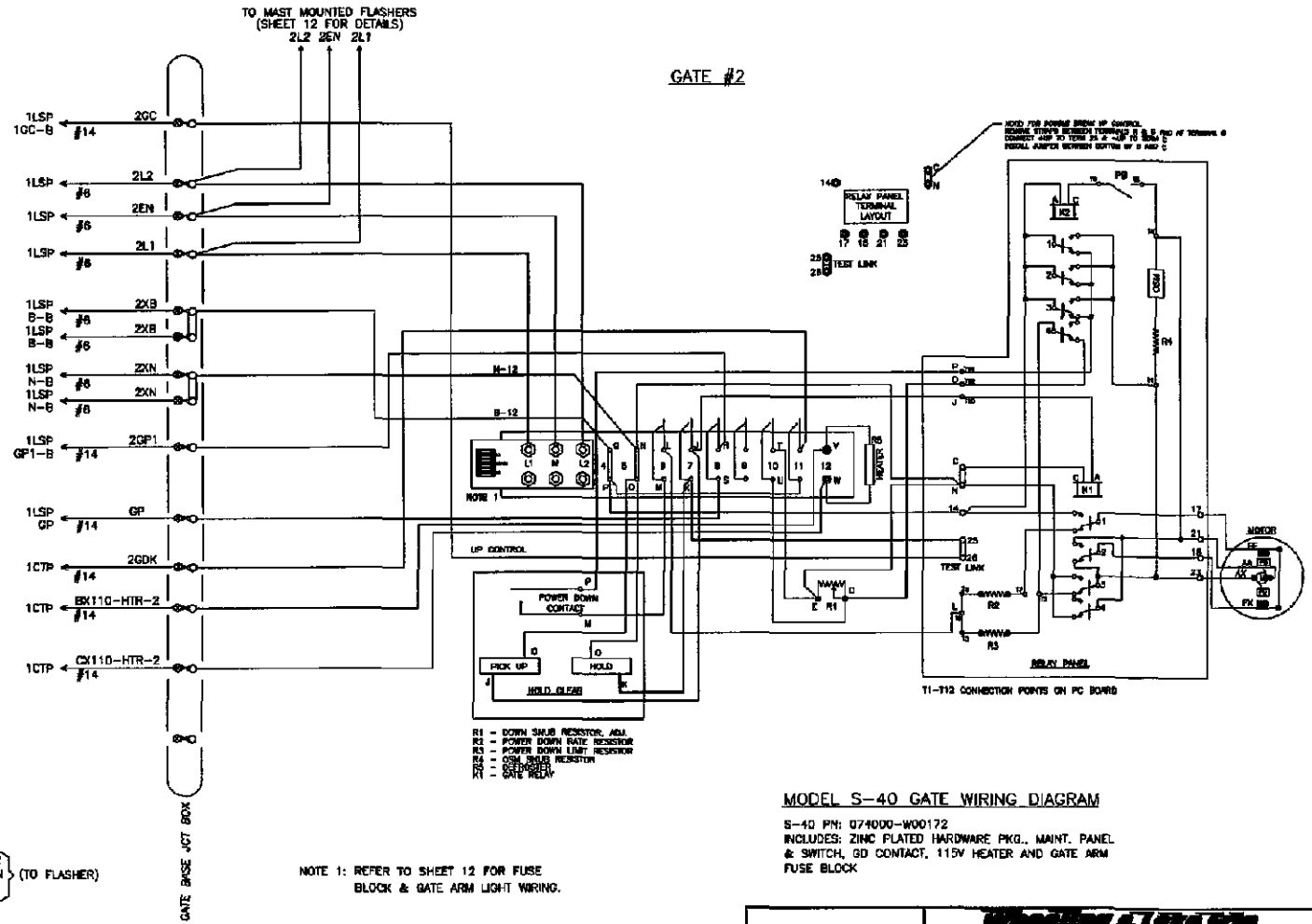

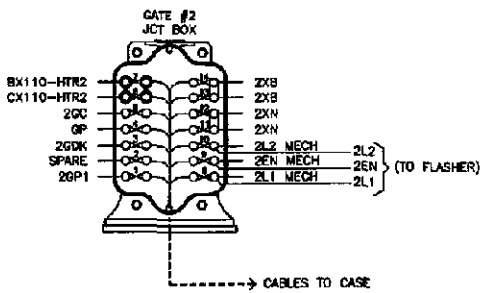

NOTE 1: REFER TO SHEET 12 FOR FUSE BLOCK & GATE ARM LIGHT WIRING.

MODEL S-40 GATE WIRING DIAGRAM

S-40 PN: 074000-W00172
INCLUDES: ZINC PLATED HARDWARE PKG., MAINT. PANEL & SWITCH, GD CONTACT, 115V HEATER AND GATE ARM FUSE BLOCK

W&LE

Wheeling & Lake Erie Railway

LOCATION: NEW STATE ROAD, CR 150
RIPLEY TWP, HURON COUNTY, OH.

ORIGINAL DATE 04/14/2010	TITLE GATE #2 MECHANISM (FAR SIDE)		
DESIGNER CTC	SUB CAREY	CTC NO. CT10024	
DRAFTSMAN CTC	MILE N - 86.7	SCALE N.T.S.	
CHECKER CTC	DOT NO. 001-983-K	SHEET 11 of 18	

REVISION BLOCK

GATE #2

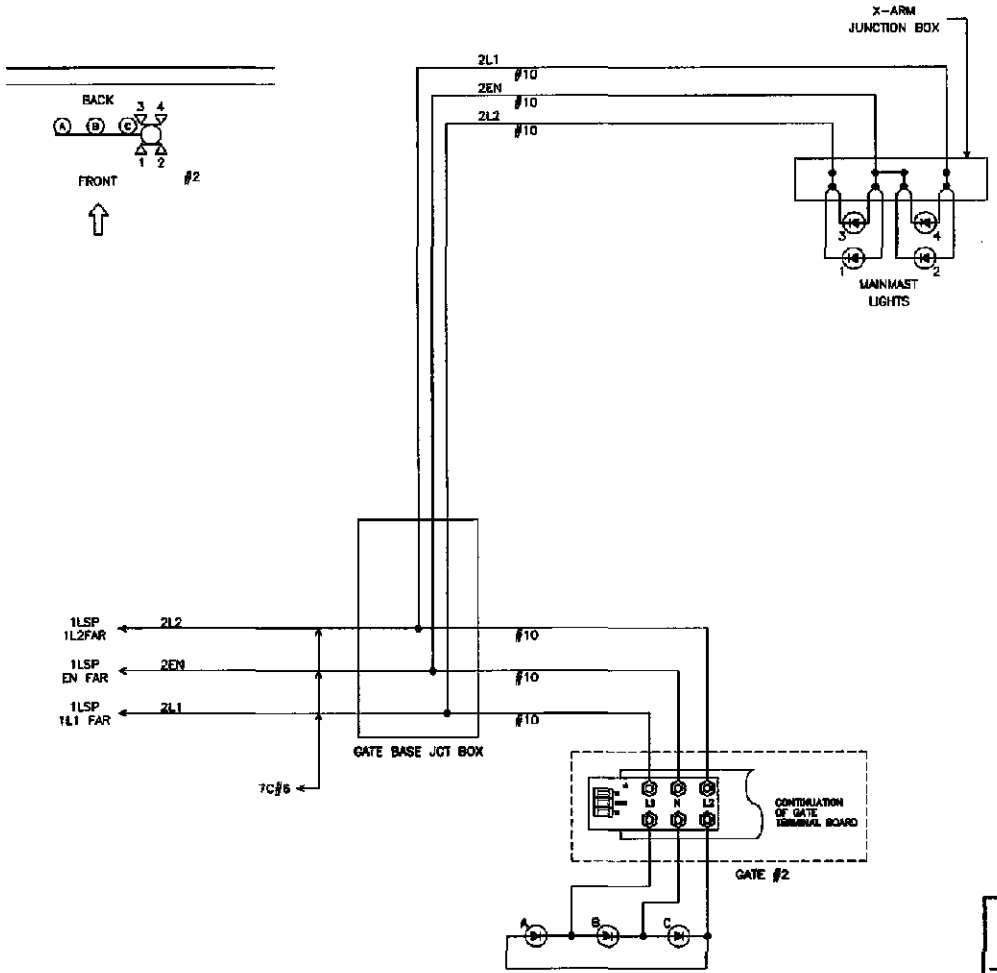

NOTE:
* USE MINI ATO 10 AMP FUSES ONLY

W&LE	Wheeling & Lake Erie Railway		
LOCATION	NEW STATE ROAD, CR 150 RIPLEY TWP, HURON COUNTY, OH.		
ORIGINAL DATE 04/14/2010	TITLE GATE #2 LIGHTS (FAR SIDE)		
DESIGNER CTC	SUB CAREY	CRC NO. CT10024	
DRAFTSMAN CTC	MRMP N - 96.7	SCALE N.T.S.	
CHECKER CTC	DOT NO. 001-983-K	SHEET 12 OF 18	

REVISION BLOCK

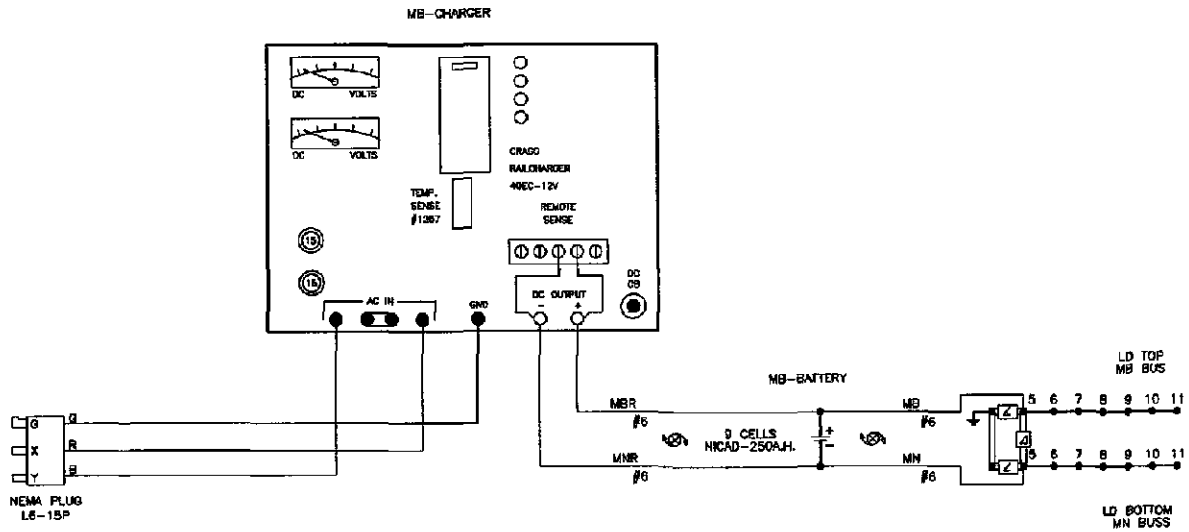

BATTERY BUSS DETAILS

MB BUSS (TOP)		LD		MN BUSS (BOTTOM)
	12			
SPARE	11			RCDR TB4-1
BCD INPUT 1	10			BCD INPUT 2
RDR 4	9			RLR 7
RCDR TB6-1	8			RCDR TB6-2
RCDR TB1-4	7			RCDR TB1-3
MDSA-1 BATT+	6			MDSA-1 BATT-
MB BATT+	5			MN BATT-

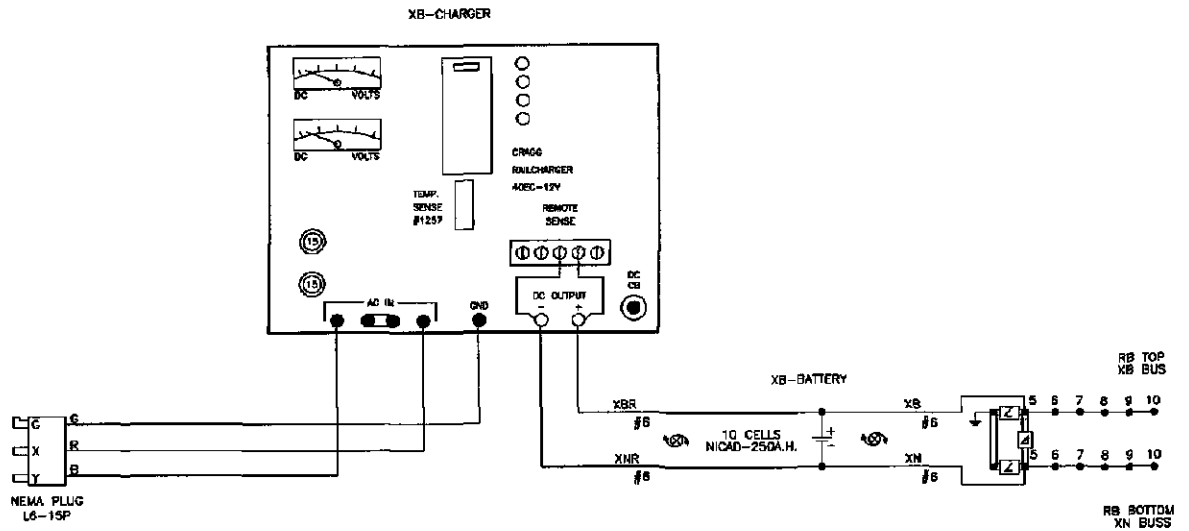

BATTERY BUSS DETAILS

XB BUSS (TOP)		RB		XN BUSS (BOTTOM)
DOOR SWITCH	10			SSCC J3-11
BCD INPUT 3	9			BCD INPUT 4
RCDR TB1-2	8			RCDR TB1-1
SPARE	7			RCDR TB4-15
1LSP B-BATT	6			1LSP N-BATT
XB BATT+	5			XN BATT-

W&LE

Wheeling & Lake Erie Railway

LOCATION
NEW STATE ROAD, CR 150
RIPLEY TWP, HURON COUNTY, OH.

ORIGINAL DATE 04/14/2010	TITLE BATTERY CHARGER		
DESIGNED CTC	SUB CAREY	CTC NO. CT10024	
DRAFTSMAN CTC	MILEP N - 95.7	SCALE 1"=2'	
CHECKED CTC	DOT NO. 001-983-K	SHEET 13 OF 18	

REVISION BLOCK

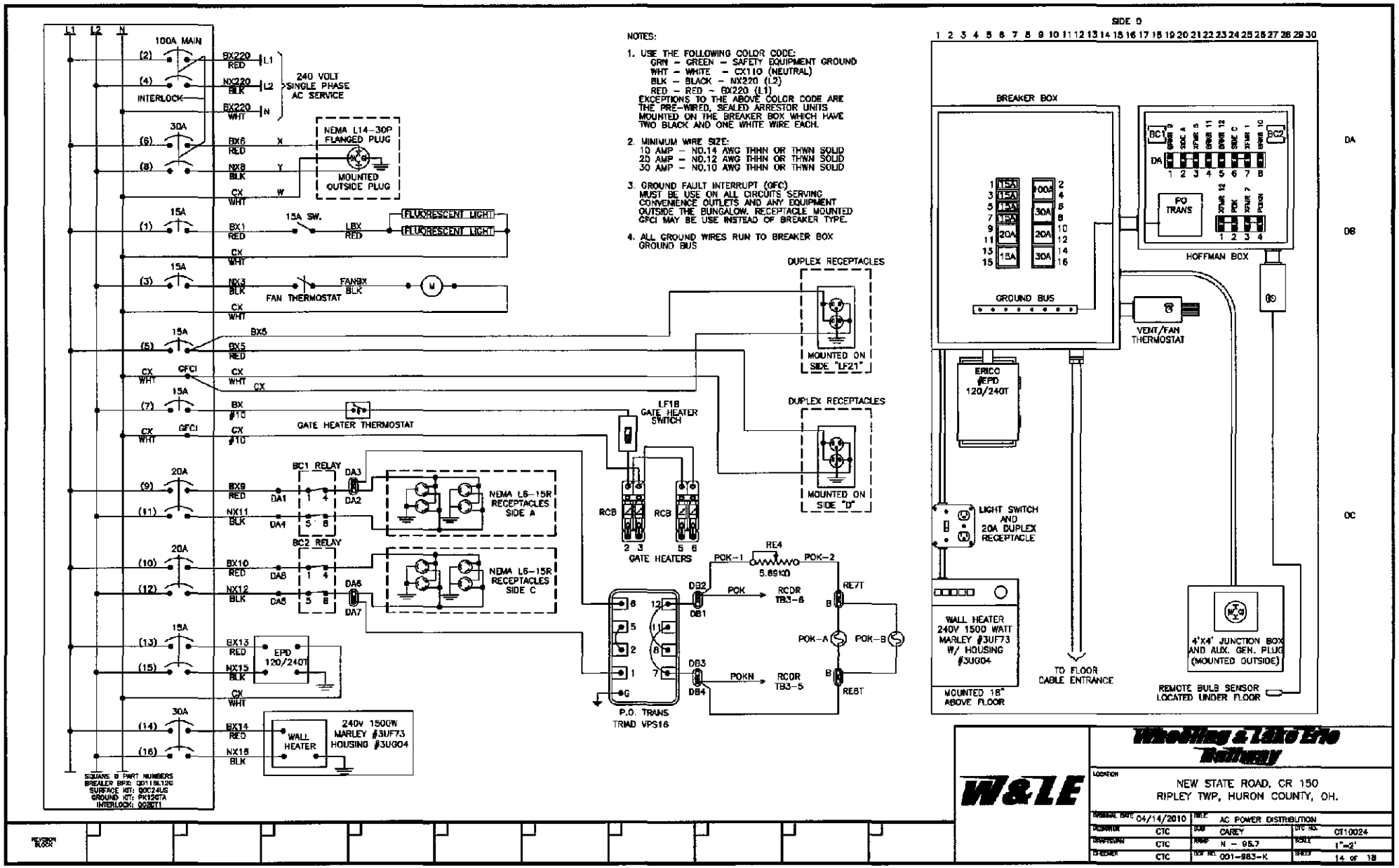
L1 L2 N
100A MAIN
INTERLOCK
240 VOLT SINGLE PHASE AC SERVICE
BX220 RED L1
NX220 BLK L2
BX220 WHT N
NEMA L14-30P FLANGED PLUG
MOUNTED OUTSIDE PLUG
BX6 RED X
NX8 BLK Y
CX WHT W
15A SW.
BX1 RED
LBX RED
FLUORESCENT LIGHT
FLUORESCENT LIGHT
NX3 BLK
FAN THERMOSTAT
FANBX BLK
BX5 RED
CX WHT
GFCI
GATE HEATER THERMOSTAT
BX #10
CX #10
BC1 RELAY
BC2 RELAY
NEMA L6-15R RECEPTACLES SIDE A
NEMA L6-15R RECEPTACLES SIDE C
BX9 RED
NX11 BLK
BX10 RED
NX12 BLK
BX13 RED
NX15 BLK
EPD 120/240T
BX14 RED
NX16 BLK
WALL HEATER
240V 1500W MARLEY #3UF73 HOUSING #3UG04
SQUARE D PART NUMBERS
BREAKER BRK: QO115L120
SURFACE KIT: QOC24US
GROUND KIT: PK12GTA
INTERLOCK: QO2GT1
NOTES:
1. USE THE FOLLOWING COLOR CODE:
GRN - GREEN - SAFETY EQUIPMENT GROUND
WHT - WHITE - CX110 (NEUTRAL)
BLK - BLACK - NX220 (L2)
RED - RED - BX220 (L1)
EXCEPTIONS TO THE ABOVE COLOR CODE ARE THE PRE-WIRED, SEALED ARRESTOR UNITS MOUNTED ON THE BREAKER BOX WHICH HAVE TWO BLACK AND ONE WHITE WIRE EACH.
2. MINIMUM WIRE SIZE:
10 AMP - NO.14 AWG THHN OR THWN SOLID
20 AMP - NO.12 AWG THHN OR THWN SOLID
30 AMP - NO.10 AWG THHN OR THWN SOLID
3. GROUND FAULT INTERRUPT (GFC) MUST BE USE ON ALL CIRCUITS SERVING CONVENIENCE OUTLETS AND ANY EQUIPMENT OUTSIDE THE BUNGALOW. RECEPTACLE MOUNTED GFCI MAY BE USE INSTEAD OF BREAKER TYPE.
4. ALL GROUND WIRES RUN TO BREAKER BOX GROUND BUS
DUPLEX RECEPTACLES
MOUNTED ON SIDE "LF21"
DUPLEX RECEPTACLES
MOUNTED ON SIDE "D"
LF18 GATE HEATER SWITCH
RCB
GATE HEATERS
RE4 5.69KΩ
POK-1
POK-2
POK
RCDR TB3-6
RE7T
POK-A
POK-B
POKN
RCDR TB3-5
RE8T
P.O. TRANS TRIAD VPS16
SIDE D
BREAKER BOX
GROUND BUS
HOFFMAN BOX
PO TRANS
VENT/FAN THERMOSTAT
ERICO #EPD 120/240T
LIGHT SWITCH AND 20A DUPLEX RECEPTACLE
WALL HEATER 240V 1500 WATT MARLEY #3UF73 W/ HOUSING #3UG04
MOUNTED 18" ABOVE FLOOR
TO FLOOR CABLE ENTRANCE
4'X4' JUNCTION BOX AND AUX. GEN. PLUG (MOUNTED OUTSIDE)
REMOTE BULB SENSOR LOCATED UNDER FLOOR
DA
DB
DC
W&LE
Wheeling & Lake Erie Railway
LOCATION
NEW STATE ROAD, CR 150
RIPLEY TWP, HURON COUNTY, OH.
ORIGINAL DATE 04/14/2010
TITLE AC POWER DISTRIBUTION
DESIGNER CTC
SUB CAREY
DTC NO. CT10024
DRAFTSMAN CTC
MAP N - 95.7
SCALE 1"=2'
CHECKER CTC
DOC NO. 001-983-K
SHEET 14 of 18
REVISION BLOCK

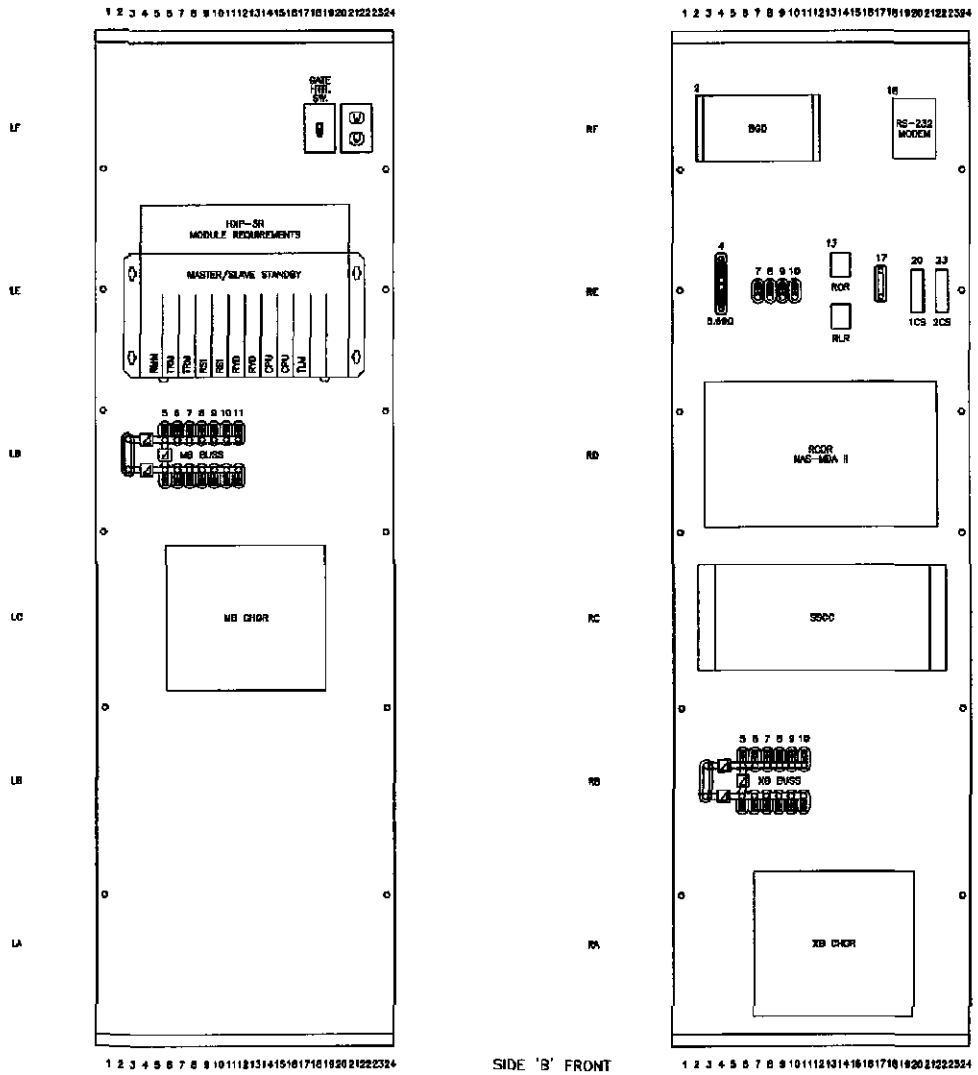

SIDE 'B' FRONT

REVISION BLOCK

W&LE

Wheeling & Lake Erie Railway

LOCATION
NEW STATE ROAD, CR 150
RIPLEY TWP, HURON COUNTY, OH.

ORIGINAL DATE 04/14/2010	TITLE RACK FRONT VIEW		
DESIGNER CTC	SUB CAREY	DTC NO. CT10024	
DRAFTSMAN CTC	RR/MP N - 96.7	SCALE 1"=2"	
CHECKER CTC	DWG NO. 001-983-K	SHEET 15 of 18	

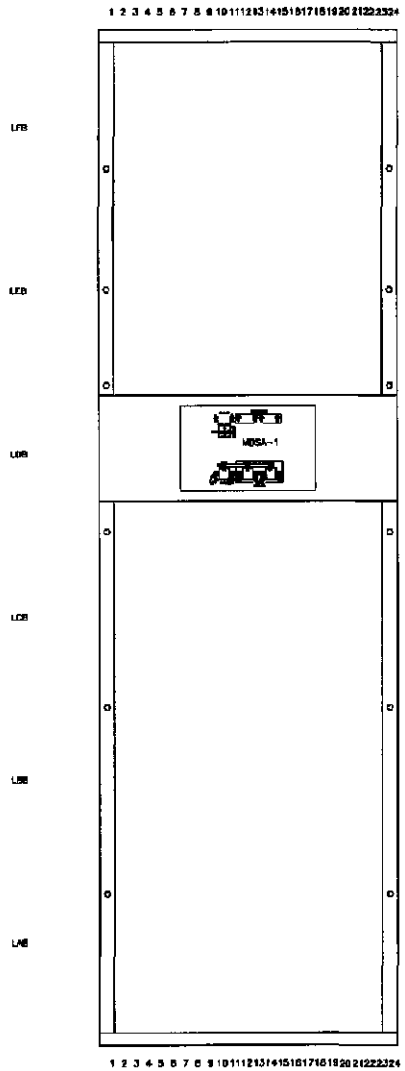

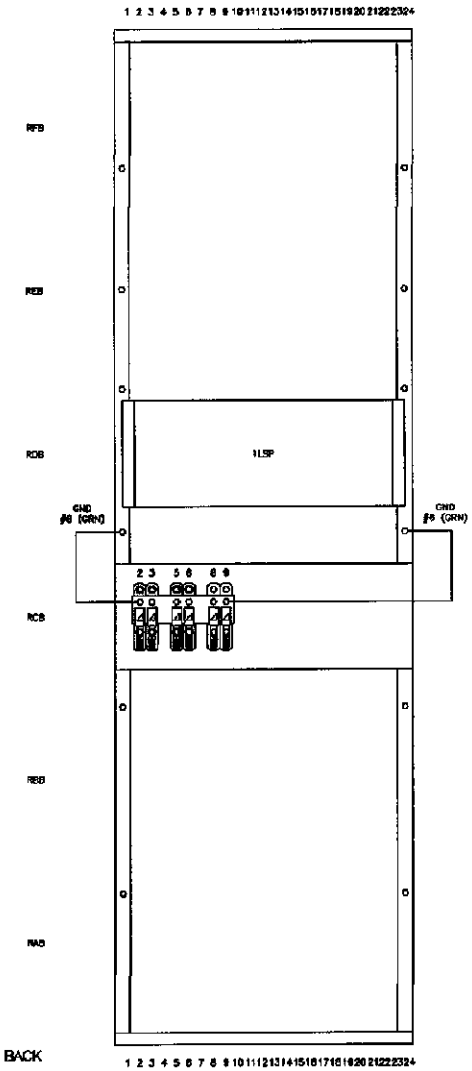

SIDE 'B' BACK

REVISION BLOCK

W&LE

Wheeling & Lake Erie Railway

LOCATION
NEW STATE ROAD, CR 150
RIPLEY TWP, HURON COUNTY, OH.

ORIGINAL DATE	04/14/2010	TITLE	RACK BACK VIEW		
DESIGNED	CTC	SUB	CAREY	CTC NO.	CT10024
DRAFTSMAN	CTC	MAP	N - 86.7	SCALE	1"=2'
CHECKED	CTC	DWG NO.	001-983-K	SHEET	16 OF 18

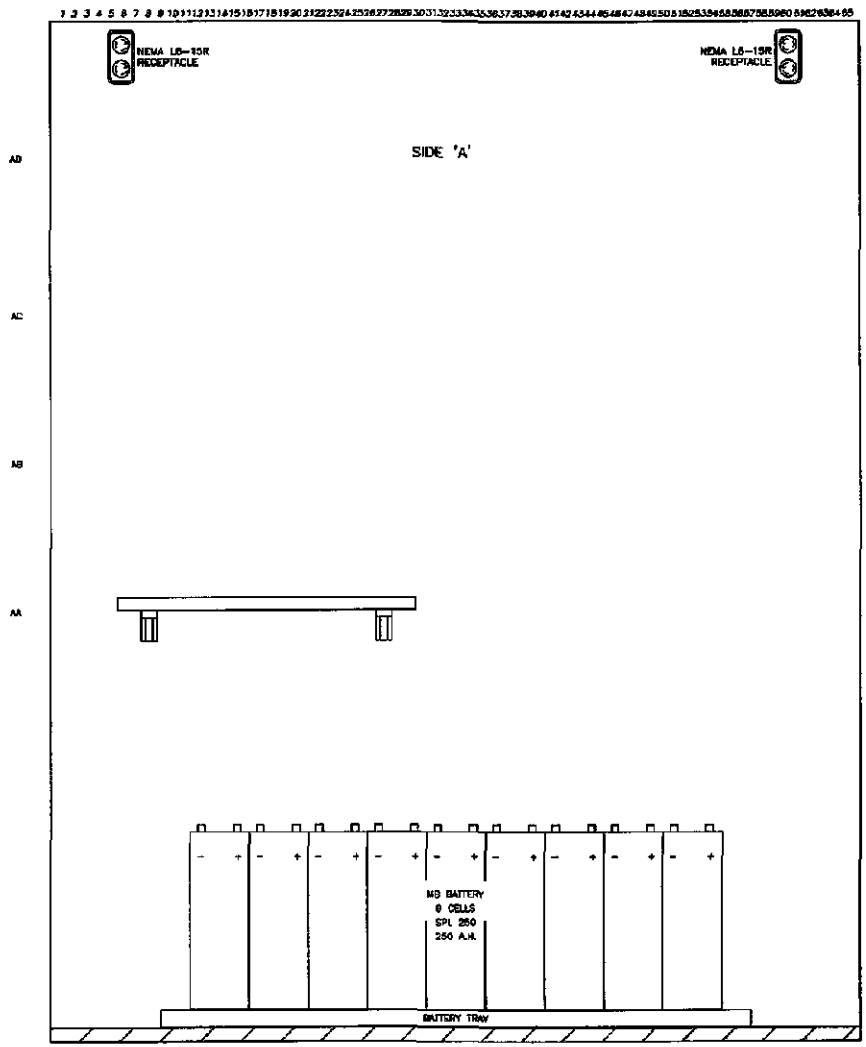

REVISION BLOCK

Wheeling & Lake Erie Railway

W&LE

LOCATION
NEW STATE ROAD, CR 150
RIPLEY TWP, HURON COUNTY, OH.

ORIGINAL DATE	04/14/2010	TITLE	SIDE "A"		
DESIGNER	CTC	SUB	CAREY	DWG NO.	CT10024
DRAFTSMAN	CTC	MILEP	W - 96.7	SCALE	1"=2"
CHECKER	CTC	DOF NO.	001-983-K	SHEET	17 of 18

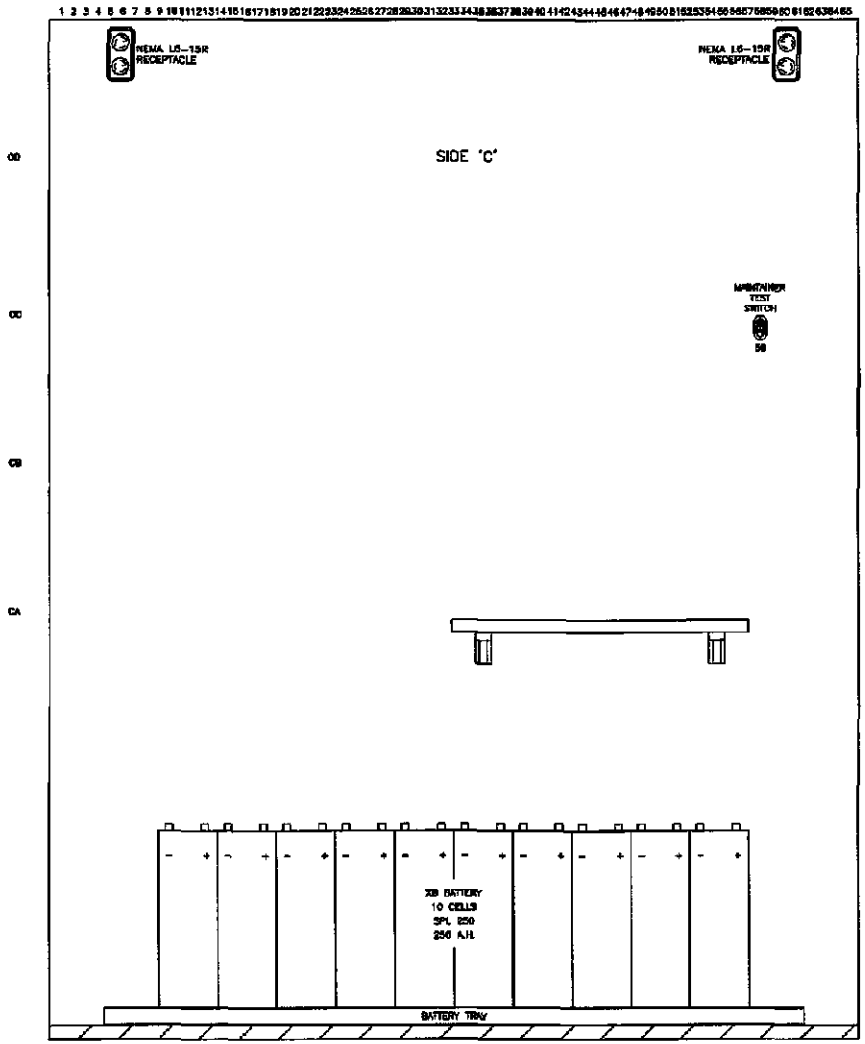

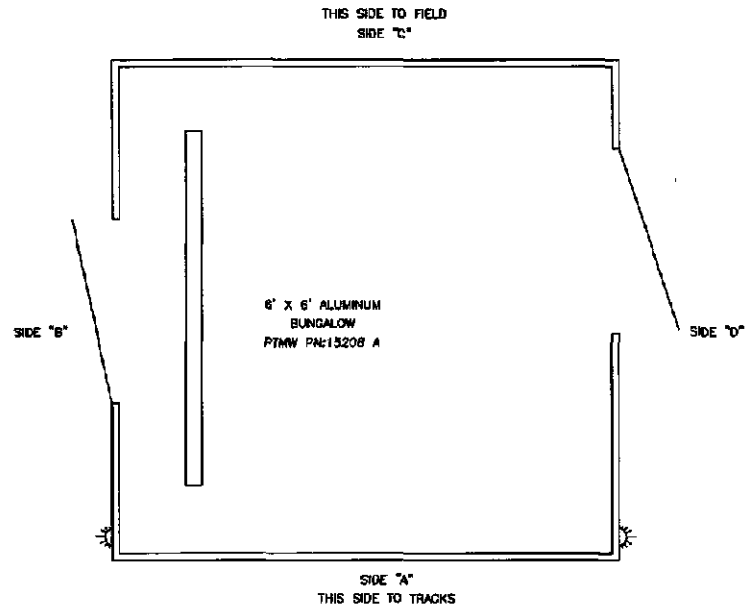

REVISION BLOCK

Wheeling & Lake Erie Railway

W&LE

LOCATION: NEW STATE ROAD, CR 150
RIPLEY TWP, HURON COUNTY, OH.

ORIGINAL DATE	04/14/2010	TITLE	SIDE "C"		
DESIGNER	CTC	SUB	CAREY	CTC NO.	CT10024
DRAFTSMAN	CTC	MILE	N - 98.7	SCALE	1"=2'
CHECKER	CTC	DOT NO.	001-983-K	SHEET	18 OF 18